AUTHENTICATED
U.S. GOVERNMENT
INFORMATION
GPO

are not satisfied or we anticipate that they will not be satisfied by that date:

(1) A statement that compliance with the request is not authorized under 20 CFR part 401 or 402, or is prohibited without the Commissioner's approval;

(2) The requirements for obtaining the approval of the Commissioner for testimony or for obtaining information, records, or testimony under 20 CFR part 401 or 402; and

(3) If the request complies with § 403.120, the estimated time necessary for a decision. We will make every reasonable effort to provide this information in writing on or before the date specified in your request.

(b) Generally, if a response to a request for information, records, or testimony is due before the conditions of this part or the conditions for disclosure in 20 CFR part 401 or 402 are met, no SSA employee will appear.

(c) SSA will seek the advice and assistance of the Department of Justice when appropriate.

§ 403.150 Is there a fee for our services?

(a) *General*. Unless the Commissioner grants a waiver, you must pay fees for our services in providing information, records, or testimony. You must pay the fees as prescribed by the Commissioner. In addition, the Commissioner may require that you pay the fees in advance as a condition of providing the information, records, or testimony. Make fees payable to the Social Security Administration by check or money order.

(b) *Records or information*. Unless the Commissioner grants a waiver, you must pay the fees for production of records or information prescribed in 20 CFR §§ 401.95 and 402.155 through 402.185, as appropriate.

(c) *Testimony*. Unless the Commissioner grants a waiver, you must pay fees calculated to reimburse the United States Government for the full cost of providing the testimony. Those costs include, but are not limited to—

(1) The salary or wages of the witness and related costs for the time necessary to prepare for and provide the testimony and any travel time, and

(2) Other travel costs.

(d) *Waiver or reduction of fees*. The Commissioner may waive or reduce fees for providing information, records, or testimony under this part. The rules in 20 CFR § 402.185 apply in determining whether to waive fees for the production of records. In deciding whether to waive or reduce fees for testimony or for production of information that does not constitute a record, the Commissioner may consider other factors, including but not limited to—

(1) The ability of the party responsible for the application to pay the full amount of the chargeable fees;

(2) The public interest, as described in 20 CFR § 402.185, affected by complying with the application;

(3) The need for the testimony or information in order to prevent a miscarriage of justice;

(4) The extent to which providing the testimony or information serves SSA's interest; and

(5) The burden on SSA's resources required to provide the information or testimony.

§ 403.155 Does SSA certify records?

We can certify the authenticity of copies of records we disclose pursuant to 20 CFR parts 401 and 402, and this part. We will provide this service only in response to your written request. If we certify, we will do so at the time of the disclosure and will not certify copies of records that have left our custody. A request for certified copies of records previously released is considered a new request for records. Fees for this certification are set forth in 20 CFR 402.165(e).

PART 404—FEDERAL OLD-AGE, SURVIVORS AND DISABILITY INSURANCE (1950–)

Subpart A—Introduction, General Provisions and Definitions

Sec.
404.1 Introduction.
404.2 General definitions and use of terms.
404.3 General provisions.

Subpart B—Insured Status and Quarters of Coverage

GENERAL

404.101 Introduction.

404.102 Definitions.

FULLY INSURED STATUS

404.110 How we determine fully insured status.
404.111 When we consider a person fully insured based on World War II active military or naval service.
404.112 When we consider certain employees of private nonprofit organizations to be fully insured.
404.115 Table for determining the quarters of coverage you need to be fully insured.

CURRENTLY INSURED STATUS

404.120 How we determine currently insured status.

DISABILITY INSURED STATUS

404.130 How we determine disability insured status.
404.131 When you must have disability insured status.
404.132 How we determine fully insured status for a period of disability or disability insurance benefits.
404.133 When we give you quarters of coverage based on military service to establish a period of disability.

QUARTERS OF COVERAGE

404.140 What is a quarter of coverage.
404.141 How we credit quarters of coverage for calendar years before 1978.
404.142 How we credit self-employment income to calendar quarters for taxable years beginning before 1978.
404.143 How we credit quarters of coverage for calendar years after 1977.
404.144 How we credit self-employment income to calendar years for taxable years beginning after 1977.
404.145 When you acquire a quarter of coverage.
404.146 When a calendar quarter cannot be a quarter of coverage.

APPENDIX TO SUBPART B OF PART 404—QUARTER OF COVERAGE AMOUNTS FOR CALENDAR YEARS AFTER 1978

Subpart C—Computing Primary Insurance Amounts

GENERAL

404.201 What is included in this subpart?
404.202 Other regulations related to this subpart.
404.203 Definitions.
404.204 Methods of computing primary insurance amounts—general.

AVERAGE-INDEXED-MONTHLY EARNINGS METHOD OF COMPUTING PRIMARY INSURANCE AMOUNTS

404.210 Average-indexed-monthly-earnings method.
404.211 Computing your average indexed monthly earnings.
404.212 Computing your primary insurance amount from your average indexed monthly earnings.
404.213 Computation where you are eligible for a pension based on your noncovered employment.

AVERAGE-MONTHLY-WAGE METHOD OF COMPUTING PRIMARY INSURANCE AMOUNTS

404.220 Average-monthly-wage method.
404.221 Computing your average monthly wage.
404.222 Use of benefit table in finding your primary insurance amount from your average monthly wage.

GUARANTEED ALTERNATIVE FOR PEOPLE REACHING AGE 62 AFTER 1978 BUT BEFORE 1984

404.230 Guaranteed alternative.
404.231 Steps in computing your primary insurance amount under the guaranteed alternative—general.
404.232 Computing your average monthly wage under the guaranteed alternative.
404.233 Adjustment of your guaranteed alternative when you become entitled after age 62.

OLD-START METHOD OF COMPUTING PRIMARY INSURANCE AMOUNTS

404.240 Old-start method—general.
404.241 1977 simplified old-start method.
404.242 Use of old-start primary insurance amount as guaranteed alternative.
404.243 Computation where you are eligible for a pension based on noncovered employment.

SPECIAL COMPUTATION RULES FOR PEOPLE WHO HAD A PERIOD OF DISABILITY

404.250 Special computation rules for people who had a period of disability.
404.251 Subsequent entitlement to benefits less than 12 months after entitlement to disability benefits ended.
404.252 Subsequent entitlement to benefits 12 months or more after entitlement to disability benefits ended.

SPECIAL MINIMUM PRIMARY INSURANCE AMOUNTS

404.260 Special minimum primary insurance amounts.
404.261 Computing your special minimum primary insurance amount.

COST-OF-LIVING INCREASES

404.270 Cost-of-living increases.

404.271 When automatic cost-of-living increases apply.
404.272 Indexes we use to measure the rise in the cost-of-living.
404.273 When are automatic cost-of-living increases effective?
404.274 What are the measuring periods we use to calculate cost-of-living increases?
404.275 How is an automatic cost-of-living increase calculated?
404.276 Publication of notice of increase.
404.277 When does the frozen minimum primary insurance amount increase because of cost-of-living adjustments?
404.278 Additional cost-of-living increase.

RECOMPUTING YOUR PRIMARY INSURANCE AMOUNT

404.280 Recomputations.
404.281 Why your primary insurance amount may be recomputed.
404.282 Effective date of recomputations.
404.283 Recomputation under method other than that used to find your primary insurance amount.
404.284 Recomputations for people who reach age 62, or become disabled, or die before age 62 after 1978.
404.285 Recomputations performed automatically.
404.286 How to request an immediate recomputation.
404.287 Waiver of recomputation.
404.288 Recomputing when you are entitled to a monthly pension based on noncovered employment.

RECALCULATIONS OF PRIMARY INSURANCE AMOUNTS

404.290 Recalculations.

APPENDIXES TO SUBPART C—NOTE
APPENDIX I TO SUBPART C OF PART 404—AVERAGE OF THE TOTAL WAGES FOR YEARS AFTER 1950
APPENDIX II TO SUBPART C OF PART 404—BENEFIT FORMULAS USED WITH AVERAGE INDEXED MONTHLY EARNINGS
APPENDIX III TO SUBPART C OF PART 404—BENEFIT TABLE
APPENDIX IV TO SUBPART C OF PART 404—EARNINGS NEEDED FOR A YEAR OF COVERAGE AFTER 1950
APPENDIX V TO SUBPART C OF PART 404—COMPUTING THE SPECIAL MINIMUM PRIMARY INSURANCE AMOUNT AND RELATED MAXIMUM FAMILY BENEFITS
APPENDIX VI TO SUBPART C OF PART 404—PERCENTAGE OF AUTOMATIC INCREASES IN PRIMARY INSURANCE AMOUNTS SINCE 1978
APPENDIX VII TO SUBPART C OF PART 404—''OLD-LAW'' CONTRIBUTION AND BENEFIT BASE

Subpart D—Old-Age, Disability, Dependents' and Survivors' Insurance Benefits; Period of Disability

GENERAL

404.301 Introduction.
404.302 Other regulations related to this subpart.
404.303 Definitions.
404.304 What are the general rules on benefit amounts?
404.305 When you may not be entitled to benefits.

OLD-AGE AND DISABILITY BENEFITS

404.310 When am I entitled to old-age benefits?
404.311 When does my entitlement to old-age benefits begin and end?
404.312 How is my old-age benefit amount calculated?
404.313 What are delayed retirement credits and how do they increase my old-age benefit amount?
404.315 Who is entitled to disability benefits?
404.316 When entitlement to disability benefits begins and ends.
404.317 How is the amount of my disability benefit calculated?
404.320 Who is entitled to a period of disability.
404.321 When a period of disability begins and ends.
404.322 When you may apply for a period of disability after a delay due to a physical or mental condition.
404.325 The termination month.

RULES RELATING TO CONTINUATION OF BENEFITS AFTER YOUR IMPAIRMENT IS NO LONGER DISABLING

404.327 When you are participating in an appropriate program of vocational rehabilitation services, employment services, or other support services.
404.328 When your completion of the program, or your continuation in the program for a specified period of time, will increase the likelihood that you will not have to return to the disability benefit rolls.

BENEFITS FOR SPOUSES AND DIVORCED SPOUSES

404.330 Who is entitled to wife's or husband's benefits.
404.331 Who is entitled to wife's or husband's benefits as a divorced spouse.
404.332 When wife's and husband's benefits begin and end.

404.333 Wife's and husband's benefit amounts.
404.335 How do I become entitled to widow's or widower's benefits?
404.336 How do I become entitled to widow's or widower's benefits as a surviving divorced spouse?
404.337 When does my entitlement to widow's and widower's benefits start and end?
404.338 Widow's and widower's benefits amounts.
404.339 How do I become entitled to mother's or father's benefits as a surviving spouse?
404.340 How do I become entitled to mother's or father's benefits as a surviving divorced spouse?
404.341 When mother's and father's benefits begin and end.
404.342 Mother's and father's benefit amounts.
404.344 Your relationship by marriage to the insured.
404.345 Your relationship as wife, husband, widow, or widower under State law.
404.346 Your relationship as wife, husband, widow, or widower based upon a deemed valid marriage.
404.347 ''Living in the same household'' defined.
404.348 When is a child living with me in my care?
404.349 When is a child living apart from me in my care?

CHILD'S BENEFITS

404.350 Who is entitled to child's benefits?
404.351 Who may be reentitled to child's benefits?
404.352 When does my entitlement to child's benefits begin and end?
404.353 Child's benefit amounts.
404.354 Your relationship to the insured.
404.355 Who is the insured's natural child?
404.356 Who is the insured's legally adopted child?
404.357 Who is the insured's stepchild?
404.358 Who is the insured's grandchild or stepgrandchild?
404.359 Who is the insured's equitably adopted child?
404.360 When a child is dependent upon the insured person.
404.361 When a natural child is dependent.
404.362 When a legally adopted child is dependent.
404.363 When is a stepchild dependent?
404.364 When is a grandchild or stepgrandchild dependent?
404.365 When an equitably adopted child is dependent.
404.366 ''Contributions for support,'' ''one-half support,'' and ''living with'' the insured defined—determining first month of entitlement.
404.367 When you are a ''full-time elementary or secondary school student''.
404.368 When you are considered a full-time student during a period of nonattendance.

PARENT'S BENEFITS

404.370 Who is entitled to parent's benefits?
404.371 When parent's benefits begin and end.
404.373 Parent's benefit amounts.
404.374 Parent's relationship to the insured.

SPECIAL PAYMENTS AT AGE 72

404.380 General.
404.381 Who is entitled to special age 72 payments?
404.382 When special age 72 payments begin and end.
404.383 Special age 72 payment amounts.
404.384 Reductions, suspensions, and nonpayments of special age 72 payments.

LUMP-SUM DEATH PAYMENT

404.390 General.
404.391 Who is entitled to the lump-sum death payment as a widow or widower who was living in the same household?
404.392 Who is entitled to the lump-sum death payment when there is no widow(er) who was living in the same household?

Subpart E—Deductions; Reductions; and Nonpayments of Benefits

404.401 Deduction, reduction, and nonpayment of monthly benefits or lump-sum death payments.
404.401a When we do not pay benefits because of a disability beneficiary's work activity.
404.402 Interrelationship of deductions, reductions, adjustments, and nonpayment of benefits.
404.403 Reduction where total monthly benefits exceed maximum family benefits payable.
404.404 How reduction for maximum affects insured individual and other persons entitled on his earnings record.
404.405 Situations where total benefits can exceed maximum because of ''savings clause.''
404.406 Reduction for maximum because of retroactive effect of application for monthly benefits.
404.407 Reduction because of entitlement to other benefits.
404.408 Reduction of benefits based on disability on account of receipt of certain other disability benefits provided under Federal, State, or local laws or plans.
404.408a Reduction where spouse is receiving a Government pension.

404.408b Reduction of retroactive monthly social security benefits where supplemental security income (SSI) payments were received for the same period.
404.409 What is full retirement age?
404.410 How does SSA reduce my benefits when my entitlement begins before full retirement age?
404.411 How are benefits reduced for age when a person is entitled to two or more benefits?
404.412 After my benefits are reduced for age when and how will adjustments to that reduction be made?
404.413 After my benefits are reduced for age what happens if there is an increase in my primary insurance amount?
404.415 Deductions because of excess earnings.
404.417 Deductions because of noncovered remunerative activity outside the United States; 45 hour and 7-day work test.
404.418 ''Noncovered remunerative activity outside the United States,'' defined.
404.420 Persons deemed entitled to benefits based on an individual's earnings record.
404.421 How are deductions made when a beneficiary fails to have a child in his or her care?
404.423 Manner of making deductions.
404.424 Total amount of deductions where more than one deduction event occurs in a month.
404.425 Total amount of deductions where deduction events occur in more than 1 month.
404.428 Earnings in a taxable year.
404.429 Earnings; defined.
404.430 Monthly and annual exempt amounts defined; excess earnings defined.
404.434 Excess earnings; method of charging.
404.435 Excess earnings; months to which excess earnings can or cannot be charged; grace year defined.
404.436 Excess earnings; months to which excess earnings cannot be charged because individual is deemed not entitled to benefits.
404.437 Excess earnings; benefit rate subject to deductions because of excess earnings.
404.439 Partial monthly benefits; excess earnings of the individual charged against his benefits and the benefits of persons entitled (or deemed entitled) to benefits on his earnings record.
404.440 Partial monthly benefits; prorated share of partial payment exceeds the benefit before deduction for excess earnings.
404.441 Partial monthly benefits; insured individual and another person entitled (or deemed entitled) on the same earnings record both have excess earnings.
404.446 Definition of ''substantial services'' and ''services''.
404.447 Evaluation of factors involved in substantial services test.
404.450 Required reports of work outside the United States or failure to have care of a child.
404.451 Penalty deductions for failure to report within prescribed time limit noncovered remunerative activity outside the United States or not having care of a child.
404.452 Reports to Social Security Administration of earnings; wages; net earnings from self-employment.
404.453 Penalty deductions for failure to report earnings timely.
404.454 Good cause for failure to make required reports.
404.455 Request by Social Security Administration for reports of earnings and estimated earnings; effect of failure to comply with request.
404.456 Current suspension of benefits because an individual works or engages in self-employment.
404.457 Deductions where taxes neither deducted from wages of certain maritime employees nor paid.
404.458 Limiting deductions where total family benefits payable would not be affected or would be only partly affected.
404.459 Penalty for making false or misleading statements or withholding information.
404.460 Nonpayment of monthly benefits to aliens outside the United States.
404.461 Nonpayment of lump sum after death of alien outside United States for more than 6 months.
404.462 Nonpayment of hospital and medical insurance benefits of alien outside United States for more than 6 months.
404.463 Nonpayment of benefits of aliens outside the United States; ''foreign social insurance system,'' and ''treaty obligation'' exceptions defined.
404.464 How does deportation or removal from the United States affect the receipt of benefits?
404.465 Conviction for subversive activities; effect on monthly benefits and entitlement to hospital insurance benefits.
404.466 Conviction for subversive activities; effect on enrollment for supplementary medical insurance benefits.
404.467 Nonpayment of benefits; individual entitled to disability insurance benefits or childhood disability benefits based on statutory blindness is engaging in substantial gainful activity.
404.468 Nonpayment of benefits to prisoners.
404.469 Nonpayment of benefits where individual has not furnished or applied for a Social Security number.
404.470 Nonpayment of disability benefits due to noncompliance with rules regarding treatment for drug addiction or alcoholism.

404.471 Nonpayment of disability benefits for trial work period service months upon a conviction of fraudulently concealing work activity.
404.480 Paying benefits in installments: Drug addiction or alcoholism.

Subpart F—Overpayments, Underpayments, Waiver of Adjustment or Recovery of Overpayments, and Liability of a Certifying Officer

404.501 General applicability of section 204 of the Act.
404.502 Overpayments.
404.502a Notice of right to waiver consideration.
404.503 Underpayments.
404.504 Relation to provisions for reductions and increases.
404.505 Relationship to provisions requiring deductions.
404.506 When waiver may be applied and how to process the request.
404.507 Fault.
404.508 Defeat the purpose of Title II.
404.509 Against equity and good conscience; defined.
404.510 When an individual is ''without fault'' in a deduction overpayment.
404.510a When an individual is ''without fault'' in an entitlement overpayment.
404.511 When an individual is at ''fault'' in a deduction overpayment.
404.512 When adjustment or recovery of an overpayment will be waived.
404.513 Liability of a certifying officer.
404.515 Collection and compromise of claims for overpayment.
404.520 Referral of overpayments to the Department of the Treasury for tax refund offset—General.
404.521 Notice to overpaid persons.
404.522 Review within SSA that an overpayment is past due and legally enforceable.
404.523 Findings by SSA.
404.524 Review of our records related to the overpayment.
404.525 Suspension of offset.
404.526 Tax refund insufficient to cover amount of overpayment.
404.527 Additional methods for recovery of title II benefit overpayments.
404.530 Are title VIII and title XVI benefits subject to adjustment to recover title II overpayments?
404.535 How much will we withhold from your title VIII and title XVI benefits to recover a title II overpayment?
404.540 Will you receive notice of our intention to apply cross-program recovery?
404.545 When will we begin cross-program recovery from current monthly benefits?

Subpart G—Filing of Applications and Other Forms

GENERAL PROVISIONS

404.601 Introduction.
404.602 Definitions.
404.603 You must file an application to receive benefits.

APPLICATIONS

404.610 What makes an application a claim for benefits?
404.611 How do I file an application for Social Security benefits?
404.612 Who may sign an application.
404.613 Evidence of authority to sign an application for another.
404.614 When an application or other form is considered filed.
404.615 Claimant must be alive when an application is filed.
404.617 Pilot program for photographic identification of disability benefit applicants in designated geographic areas.

EFFECTIVE FILING PERIOD OF APPLICATION

404.620 Filing before the first month you meet the requirements for benefits.
404.621 What happens if I file after the first month I meet the requirements for benefits?
404.622 Limiting an application.
404.623 Am I required to file for all benefits if I am eligible for old-age and husband's or wife's benefits?

FILING DATE BASED ON WRITTEN STATEMENT

404.630 Use of date of written statement as filing date.
404.631 Statements filed with the Railroad Retirement Board.
404.632 Statements filed with a hospital.

DEEMED FILING DATE BASED ON MISINFORMATION

404.633 Deemed filing date in a case of misinformation.

WITHDRAWAL OF APPLICATION

404.640 Withdrawal of an application.
404.641 Cancellation of a request to withdraw.

Subpart H—Evidence

GENERAL

404.701 Introduction.
404.702 Definitions.
404.703 When evidence is needed.
404.704 Your responsibility for giving evidence.
404.705 Failure to give requested evidence.
404.706 Where to give evidence.
404.707 Original records or copies as evidence.

404.708 How we decide what is enough evidence.
404.709 Preferred evidence and other evidence.

EVIDENCE OF AGE, MARRIAGE, AND DEATH

404.715 When evidence of age is needed.
404.716 Type of evidence of age to be given.
404.720 Evidence of a person's death.
404.721 Evidence to presume a person is dead.
404.722 Rebuttal of a presumption of death.
404.723 When evidence of marriage is required.
404.725 Evidence of a valid ceremonial marriage.
404.726 Evidence of common-law marriage.
404.727 Evidence of a deemed valid marriage.
404.728 Evidence a marriage has ended.

EVIDENCE FOR CHILD'S AND PARENT'S BENEFITS

404.730 When evidence of a parent or child relationship is needed.
404.731 Evidence you are a natural parent or child.
404.732 Evidence you are a stepparent or stepchild.
404.733 Evidence you are the legally adopting parent or legally adopted child.
404.734 Evidence you are an equitably adopted child.
404.735 Evidence you are the grandchild or stepgrandchild.
404.736 Evidence of a child's dependency.
404.745 Evidence of school attendance for child age 18 or older.
404.750 Evidence of a parent's support.

OTHER EVIDENCE REQUIREMENTS

404.760 Evidence of living in the same household with insured person.
404.762 What is acceptable evidence of having a child in my care?
404.770 Evidence of where the insured person had a permanent home.
404.780 Evidence of ''good cause'' for exceeding time limits on accepting proof of support or application for a lump-sum death payment.

Subpart I—Records of Earnings

GENERAL PROVISIONS

404.801 Introduction.
404.802 Definitions.
404.803 Conclusiveness of the record of your earnings.

OBTAINING EARNINGS INFORMATION

404.810 How to obtain a statement of earnings and a benefit estimate statement.
404.811 The statement of earnings and benefit estimates you requested.
404.812 Statement of earnings and benefit estimates sent without request.

CORRECTING THE EARNINGS RECORD

404.820 Filing a request for correction of the record of your earnings.
404.821 Correction of the record of your earnings before the time limit ends.
404.822 Correction of the record of your earnings after the time limit ends.
404.823 Correction of the record of your earnings for work in the employ of the United States.

NOTICE OF REMOVAL OR REDUCTION OF AN ENTRY OF EARNINGS

404.830 Notice of removal or reduction of your wages.
404.831 Notice of removal or reduction of your self-employment income.

Subpart J—Determinations, Administrative Review Process, and Reopening of Determinations and Decisions

INTRODUCTION, DEFINITIONS, AND INITIAL DETERMINATIONS

404.900 Introduction.
404.901 Definitions.
404.902 Administrative actions that are initial determinations.
404.903 Administrative actions that are not initial determinations.
404.904 Notice of the initial determination.
404.905 Effect of an initial determination.
404.906 Testing modifications to the disability determination procedures.

RECONSIDERATION

404.907 Reconsideration—general.
404.908 Parties to a reconsideration.
404.909 How to request reconsideration.
404.911 Good cause for missing the deadline to request review.
404.913 Reconsideration procedures.
404.914 Disability hearing—general.
404.915 Disability hearing—disability hearing officers.
404.916 Disability hearing—procedures.
404.917 Disability hearing—disability hearing officer's reconsidered determination.
404.918 Disability hearing—review of the disability hearing officer's reconsidered determination before it is issued.
404.919 Notice of another person's request for reconsideration.
404.920 Reconsidered determination.
404.921 Effect of a reconsidered determination.
404.922 Notice of a reconsidered determination.

EXPEDITED APPEALS PROCESS

404.923 Expedited appeals process—general.
404.924 When the expedited appeals process may be used.

404.925 How to request expedited appeals process.
404.926 Agreement in expedited appeals process.
404.927 Effect of expedited appeals process agreement.
404.928 Expedited appeals process request that does not result in agreement.

HEARING BEFORE AN ADMINISTRATIVE LAW JUDGE

404.929 Hearing before an administrative law judge—general.
404.930 Availability of a hearing before an administrative law judge.
404.932 Parties to a hearing before an administrative law judge.
404.933 How to request a hearing before an administrative law judge.
404.935 Submitting evidence prior to a hearing before an administrative law judge.
404.936 Time and place for a hearing before an administrative law judge.
404.937 Protecting the safety of the public and our employees in our hearing process.
404.938 Notice of a hearing before an administrative law judge.
404.939 Objections to the issues.
404.940 Disqualification of the administrative law judge.
404.941 Prehearing case review.
404.942 Prehearing proceedings and decisions by attorney advisors.
404.943 Responsibilities of the adjudication officer.

ADMINISTRATIVE LAW JUDGE HEARING PROCEDURES

404.944 Administrative law judge hearing procedures—general.
404.946 Issues before an administrative law judge.
404.948 Deciding a case without an oral hearing before an administrative law judge.
404.949 Presenting written statements and oral arguments.
404.950 Presenting evidence at a hearing before an administrative law judge.
404.951 When a record of a hearing before an administrative law judge is made.
404.952 Consolidated hearing before an administrative law judge.
404.953 The decision of an administrative law judge.
404.955 The effect of an administrative law judge's decision.
404.956 Removal of a hearing request from an administrative law judge to the Appeals Council.
404.957 Dismissal of a request for a hearing before an administrative law judge.
404.958 Notice of dismissal of a request for a hearing before an administrative law judge.
404.959 Effect of dismissal of a request for a hearing before an administrative law judge.
404.960 Vacating a dismissal of a request for a hearing before an administrative law judge.
404.961 Prehearing and posthearing conferences.
404.965 [Reserved]

APPEALS COUNCIL REVIEW

404.966 Testing elimination of the request for Appeals Council review.
404.967 Appeals Council review—general.
404.968 How to request Appeals Council review.
404.969 Appeals Council initiates review.
404.970 Cases the Appeals Council will review.
404.971 Dismissal by Appeals Council.
404.972 Effect of dismissal of request for Appeals Council review.
404.973 Notice of Appeals Council review.
404.974 Obtaining evidence from Appeals Council.
404.975 Filing briefs with the Appeals Council.
404.976 Procedures before Appeals Council on review.
404.977 Case remanded by Appeals Council.
404.979 Decision of Appeals Council.
404.981 Effect of Appeals Council's decision or denial of review.
404.982 Extension of time to file action in Federal district court.

COURT REMAND CASES

404.983 Case remanded by a Federal court.
404.984 Appeals Council review of administrative law judge decision in a case remanded by a Federal court.
404.985 Application of circuit court law.

REOPENING AND REVISING DETERMINATIONS AND DECISIONS

404.987 Reopening and revising determinations and decisions.
404.988 Conditions for reopening.
404.989 Good cause for reopening.
404.990 Finality of determinations and decisions on revision of an earnings record.
404.991 Finality of determinations and decisions to suspend benefit payments for entire taxable year because of earnings.
404.991a Late completion of timely investigation.
404.992 Notice of revised determination or decision.
404.993 Effect of revised determination or decision.
404.994 Time and place to request a hearing on revised determination or decision.
404.995 Finality of findings when later claim is filed on same earnings record.
404.996 Increase in future benefits where time period for reopening expires.

PAYMENT OF CERTAIN TRAVEL EXPENSES

404.999a Payment of certain travel expenses—general.
404.999b Who may be reimbursed.
404.999c What travel expenses are reimbursable.
404.999d When and how to claim reimbursement.

Subpart K—Employment, Wages, Self-Employment, and Self-Employment Income

404.1001 Introduction.
404.1002 Definitions.

EMPLOYMENT

404.1003 Employment.
404.1004 What work is covered as employment?
404.1005 Who is an employee.
404.1006 Corporation officer.
404.1007 Common-law employee.
404.1008 Agent-driver or commission-driver, full-time life insurance salesman, home worker, or traveling or city salesman.
404.1009 Who is an employer.
404.1010 Farm crew leader as employer.

WORK EXCLUDED FROM EMPLOYMENT

404.1012 Work excluded from employment.
404.1013 Included-excluded rule.
404.1014 Domestic service by a student for a local college club, fraternity or sorority.
404.1015 Family services.
404.1016 Foreign agricultural workers.
404.1017 Sharefarmers.
404.1018 Work by civilians for the United States Government or its instrumentalities—wages paid after 1983.
404.1018a Work by civilians for the United States Government or its instrumentalities—remuneration paid prior to 1984.
404.1018b Medicare qualified government employment.
404.1019 Work as a member of a uniformed service of the United States.
404.1020 Work for States and their political subdivisions and instrumentalities.
404.1021 Work for the District of Columbia.
404.1022 American Samoa, Guam, or the Commonwealth of the Northern Mariana Islands.
404.1023 Ministers of churches and members of religious orders.
404.1024 Election of coverage by religious orders.
404.1025 Work for religious, charitable, educational, or certain other organizations exempt from income tax.
404.1026 Work for a church or qualified church-controlled organization.
404.1027 Railroad work.
404.1028 Student working for a school, college, or university.
404.1029 Student nurses.
404.1030 Delivery and distribution or sale of newspapers, shopping news, and magazines.
404.1031 Fishing.
404.1032 Work for a foreign government.
404.1033 Work for a wholly owned instrumentality of a foreign government.
404.1034 Work for an international organization.
404.1035 Work for a communist organization.
404.1036 Certain nonresident aliens.
404.1037 Work on or in connection with a non-American vessel or aircraft.
404.1038 Domestic employees under age 18.

EXEMPTION FROM SOCIAL SECURITY BY REASON OF RELIGOUS BELIEF

404.1039 Employers (including partnerships) and employees who are both members of certain religious groups opposed to insurance.

WAGES

404.1041 Wages.
404.1042 Wages when paid and received.
404.1043 Facilities or privileges—meals and lodging.
404.1044 Vacation pay.
404.1045 Employee expenses.
404.1046 Pay for work by certain members of religious orders.
404.1047 Annual wage limitation.
404.1048 Contribution and benefit base after 1992.
404.1049 Payments under an employer plan or system.
404.1050 Retirement payments.
404.1051 Payments on account of sickness or accident disability, or related medical or hospitalization expenses.
404.1052 Payments from or to certain tax-exempt trusts or payments under or into certain annuity plans.
404.1053 ''Qualified benefits'' under a cafeteria plan.
404.1054 Payments by an employer of employee's tax or employee's contribution under State law.
404.1055 Payments for agricultural labor.
404.1056 Explanation of agricultural labor.
404.1057 Domestic service in the employer's home.
404.1058 Special situations.
404.1059 Deemed wages for certain individuals interned during World War II.
404.1060 [Reserved]

SELF-EMPLOYMENT

404.1065 Self-employment coverage.
404.1066 Trade or business in general.
404.1068 Employees who are considered self-employed.
404.1069 Real estate agents and direct sellers.
404.1070 Christian Science practitioners.

404.1071 Ministers and members of religious orders.
404.1073 Public office.
404.1074 Farm crew leader who is self-employed.
404.1075 Members of certain religious groups opposed to insurance.
404.1077 Individuals under railroad retirement system.

SELF-EMPLOYMENT INCOME

404.1080 Net earnings from self-employment.
404.1081 General rules for figuring net earnings from self-employment.
404.1082 Rentals from real estate; material participation.
404.1083 Dividends and interest.
404.1084 Gain or loss from disposition of property; capital assets; timber, coal, and iron ore; involuntary conversion.
404.1085 Net operating loss deduction.
404.1086 Community income.
404.1087 Figuring partner's net earnings from self-employment for taxable year which ends as a result of death.
404.1088 Retirement payment to retired partners.
404.1089 Figuring net earnings for residents and nonresidents of Puerto Rico.
404.1090 Personal exemption deduction.
404.1091 Figuring net earnings for ministers and members of religious orders.
404.1092 Figuring net earnings for U.S. citizens or residents living outside the United States.
404.1093 Possession of the United States.
404.1094 Options available for figuring net earnings from self-employment.
404.1095 Agricultural trade or business.
404.1096 Self-employment income.

Subpart L [Reserved]

Subpart M—Coverage of Employees of State and Local Governments

GENERAL

404.1200 General.
404.1201 Scope of this subpart regarding coverage and wage reports and adjustments.
404.1202 Definitions.
404.1203 Evidence—for wages paid prior to 1987.
404.1204 Designating officials to act on behalf of the State.

WHAT GROUPS OF EMPLOYEES MAY BE COVERED

404.1205 Absolute coverage groups.
404.1206 Retirement system coverage groups.
404.1207 Divided retirement system coverage groups.
404.1208 Ineligible employees.
404.1209 Mandatorily excluded services.
404.1210 Optionally excluded services.
404.1211 Interstate instrumentalities.
404.1212 Police officers and firefighters.

HOW COVERAGE UNDER AGREEMENTS IS OBTAINED AND CONTINUES

404.1214 Agreement for coverage.
404.1215 Modification of agreement.
404.1216 Modification of agreement to correct an error.
404.1217 Continuation of coverage.
404.1218 Resumption of coverage.
404.1219 Dissolution of political subdivision.

HOW TO IDENTIFY COVERED EMPLOYEES

404.1220 Identification numbers.

WHAT RECORDS OF COVERAGE MUST BE KEPT

404.1225 Records—for wages paid prior to 1987.

REVIEW OF COMPLIANCE BY STATE WITH ITS AGREEMENT

404.1230 Onsite review program.
404.1231 Scope of review.
404.1232 Conduct of review.
404.1234 Reports of review's findings.

HOW TO REPORT WAGES AND CONTRIBUTIONS—FOR WAGES PAID PRIOR TO 1987

404.1237 Wage reports and contribution returns—general—for wages paid prior to 1987.
404.1239 Wage reports for employees performing services in more than one coverage group—for wages paid prior to 1987.
404.1242 Back pay.
404.1243 Use of reporting forms—for wages paid prior to 1987.
404.1247 When to report wages—for wages paid prior to 1987.
404.1249 When and where to make deposits of contributions and to file contribution returns and wage reports—for wages paid prior to 1987.
404.1251 Final reports—for wages paid prior to 1987.

WHAT IS A STATE'S LIABILITY FOR CONTRIBUTIONS—FOR WAGES PAID PRIOR TO 1987

404.1255 State's liability for contributions—for wages paid prior to 1987.
404.1256 Limitation on State's liability for contributions for multiple employment situations—for wages paid prior to 1987.

FIGURING THE AMOUNT OF THE STATE'S CONTRIBUTIONS—FOR WAGES PAID PRIOR TO 1987

404.1260 Amount of contributions—for wages paid prior to 1987.
404.1262 Manner of payment of contributions by State—for wages paid prior to 1987.

404.1263 When fractional part of a cent may be disregarded—for wages paid prior to 1987.

IF A STATE FAILS TO MAKE TIMELY PAYMENTS—FOR WAGES PAID PRIOR TO 1987

404.1265 Addition of interest to contributions—for wages paid prior to 1987.
404.1267 Failure to make timely payments—for wages paid prior to 1987.

HOW ERRORS IN REPORTS AND CONTRIBUTIONS ARE ADJUSTED—FOR WAGES PAID PRIOR TO 1987

404.1270 Adjustments in general—for wages paid prior to 1987.
404.1271 Adjustment of overpayment of contributions—for wages paid prior to 1987.
404.1272 Refund or recomputation of overpayments which are not adjustable—for wages paid prior to 1987.
404.1275 Adjustment of employee contributions—for wages paid prior to 1987.
404.1276 Reports and payments erroneously made to Internal Revenue Service-transfer of funds—for wages paid prior to 1987.

HOW OVERPAYMENTS OF CONTRIBUTIONS ARE CREDITED OR REFUNDED—FOR WAGES PAID PRIOR TO 1987

404.1280 Allowance of credits or refunds—for wages paid prior to 1987.
404.1281 Credits or refunds for periods of time during which no liability exists—for wages paid prior to 1987.
404.1282 Time limitations on credits or refunds—for wages paid prior to 1987.
404.1283 Exceptions to the time limitations on credits or refunds—for wages paid prior to 1987.
404.1284 Offsetting underpayments against overpayments—for wages paid prior to 1987.

HOW ASSESSMENTS FOR UNDERPAYMENTS OF CONTRIBUTIONS ARE MADE—FOR WAGES PAID PRIOR TO 1987

404.1285 Assessments of amounts due—for wages paid prior to 1987.
404.1286 Time limitations on assessments—for wages paid prior to 1987.
404.1287 Exceptions to the time limitations on assessments—for wages paid prior to 1987.
404.1289 Payment after expiration of time limitation for assessment—for wages paid prior to 1987.

SECRETARY'S REVIEW OF DECISIONS ON CREDITS, REFUNDS, OR ASSESSMENTS—FOR WAGES PAID PRIOR TO 1987

404.1290 Review of decisions by the Secretary—for wages paid prior to 1987.
404.1291 Reconsideration—for wages paid prior to 1987.
404.1292 How to request review—for wages paid prior to 1987.
404.1293 Time for filing request for review—for wages paid prior to 1987.
404.1294 Notification to State after reconsideration—for wages paid prior to 1987.
404.1295 Commissioner's review—for wages paid prior to 1987.
404.1296 Commissioner's notification to the State—for wages paid prior to 1987.

HOW A STATE MAY SEEK COURT REVIEW OF SECRETARY'S DECISION—FOR WAGES PAID PRIOR TO 1987

404.1297 Review by court—for wages paid prior to 1987.
404.1298 Time for filing civil action—for wages paid prior to 1987.
404.1299 Final judgments—for wages paid prior to 1987.

Subpart N—Wage Credits for Veterans and Members of the Uniformed Services

GENERAL

404.1301 Introduction.
404.1302 Definitions.

WORLD WAR II VETERANS

404.1310 Who is a World War II veteran.
404.1311 Ninety-day active service requirement for World War II veterans.
404.1312 World War II service included.
404.1313 World War II service excluded.

POST-WORLD WAR II VETERANS

404.1320 Who is a post-World War II veteran.
404.1321 Ninety-day active service requirement for post-World War II veterans.
404.1322 Post-World War II service included.
404.1323 Post-World War II service excluded.

SEPARATION FROM ACTIVE SERVICE

404.1325 Separation from active service under conditions other than dishonorable.

MEMBERS OF THE UNIFORMED SERVICES

404.1330 Who is a member of a uniformed service.

AMOUNTS OF WAGE CREDITS AND LIMITS ON THEIR USE

404.1340 Wage credits for World War II and post-World War II veterans.
404.1341 Wage credits for a member of a uniformed service.
404.1342 Limits on granting World War II and post-World War II wage credits.
404.1343 When the limits on granting World War II and post-World War II wage credits do not apply.

DEEMED INSURED STATUS FOR WORLD WAR II VETERANS

404.1350 Deemed insured status.
404.1351 When deemed insured status does not apply.
404.1352 Benefits and payments based on deemed insured status.

EFFECT OF OTHER BENEFITS ON PAYMENT OF SOCIAL SECURITY BENEFITS AND PAYMENTS

404.1360 Veterans Administration pension or compensation payable.
404.1361 Federal benefit payable other than by Veterans Administration.
404.1362 Treatment of social security benefits or payments where Veterans Administration pension or compensation payable.
404.1363 Treatment of social security benefits or payments where Federal benefit payable other than by Veterans Administration.

EVIDENCE OF ACTIVE SERVICE AND MEMBERSHIP IN A UNIFORMED SERVICE

404.1370 Evidence of active service and separation from active service.
404.1371 Evidence of membership in a uniformed service during the years 1957 through 1967.

Subpart O—Interrelationship of Old-Age, Survivors and Disability Insurance Program With the Railroad Retirement Program

404.1401 What is the interrelationship between the Railroad Retirement Act and the Old-Age, Survivors and Disability Insurance Program of the Social Security Act?
404.1402 When are railroad industry services by a non-vested worker covered under Social Security?
404.1404 Effective date of coverage of railroad services under the act.
404.1405 If you have been considered a non-vested worker, what are the situations when your railroad industry work will not be covered under Social Security?
404.1406 Eligibility to railroad retirement benefits as a bar to payment of social security benefits.
404.1407 When railroad retirement benefits do not bar payment of social security benefits.
404.1408 Compensation to be treated as wages.
404.1409 Purposes of using compensation.
404.1410 Presumption on basis of certified compensation record.
404.1412 Compensation quarters of coverage.
404.1413 When will we certify payment to the Railroad Retirement Board (RRB)?

Subpart P—Determining Disability and Blindness

GENERAL

404.1501 Scope of subpart.
404.1502 General definitions and terms for this subpart.

DETERMINATIONS

404.1503 Who makes disability and blindness determinations.
404.1503a Program integrity.
404.1504 Determinations by other organizations and agencies.

DEFINITION OF DISABILITY

404.1505 Basic definition of disability.
404.1506 When we will not consider your impairment.
404.1508 What is needed to show an impairment.
404.1509 How long the impairment must last.
404.1510 Meaning of substantial gainful activity.
404.1511 Definition of disabling impairment.

EVIDENCE

404.1512 Evidence.
404.1513 Medical and other evidence of your impairment(s).
404.1514 When we will purchase existing evidence.
404.1515 Where and how to submit evidence.
404.1516 If you fail to submit medical and other evidence.
404.1517 Consultative examination at our expense.
404.1518 If you do not appear at a consultative examination.

STANDARDS TO BE USED IN DETERMINING WHEN A CONSULTATIVE EXAMINATION WILL BE OBTAINED IN CONNECTION WITH DISABILITY DETERMINATIONS

404.1519 The consultative examination.
404.1519a When we will purchase a consultative examination and how we will use it.
404.1519b When we will not purchase a consultative examination.

STANDARDS FOR THE TYPE OF REFERRAL AND FOR REPORT CONTENT

404.1519f Type of purchased examinations.
404.1519g Who we will select to perform a consultative examination.
404.1519h Your treating source.
404.1519i Other sources for consultative examinations.
404.1519j Objections to the medical source designated to perform the consultative examination.

404.1519k Purchase of medical examinations, laboratory tests, and other services.
404.1519m Diagnostic tests or procedures.
404.1519n Informing the medical source of examination scheduling, report content, and signature requirements.
404.1519o When a properly signed consultative examination report has not been received.
404.1519p Reviewing reports of consultative examinations.
404.1519q Conflict of interest.

AUTHORIZING AND MONITORING THE REFERRAL PROCESS

404.1519s Authorizing and monitoring the consultative examination.

PROCEDURES TO MONITOR THE CONSULTATIVE EXAMINATION

404.1519t Consultative examination oversight.

EVALUATION OF DISABILITY

404.1520 Evaluation of disability in general.
404.1520a Evaluation of mental impairments.
404.1520b How we consider evidence.
404.1521 What we mean by an impairment(s) that is not severe.
404.1522 When you have two or more unrelated impairments—initial claims.
404.1523 Multiple impairments.

MEDICAL CONSIDERATIONS

404.1525 Listing of Impairments in appendix 1.
404.1526 Medical equivalence.
404.1527 Evaluating opinion evidence.
404.1528 Symptoms, signs, and laboratory findings.
404.1529 How we evaluate symptoms, including pain.
404.1530 Need to follow prescribed treatment.
404.1535 How we will determine whether your drug addiction or alcoholism is a contributing factor material to the determination of disability.
404.1536 Treatment required for individuals whose drug addiction or alcoholism is a contributing factor material to the determination of disability.
404.1537 What we mean by appropriate treatment.
404.1538 What we mean by approved institutions or facilities.
404.1539 How we consider whether treatment is available.
404.1540 Evaluating compliance with the treatment requirements.
404.1541 Establishment and use of referral and monitoring agencies.

RESIDUAL FUNCTIONAL CAPACITY

404.1545 Your residual functional capacity.
404.1546 Responsibility for assessing your residual functional capacity.

VOCATIONAL CONSIDERATIONS

404.1560 When we will consider your vocational background.
404.1562 Medical-vocational profiles showing an inability to make an adjustment to other work.
404.1563 Your age as a vocational factor.
404.1564 Your education as a vocational factor.
404.1565 Your work experience as a vocational factor.
404.1566 Work which exists in the national economy.
404.1567 Physical exertion requirements.
404.1568 Skill requirements.
404.1569 Listing of Medical-Vocational Guidelines in appendix 2.
404.1569a Exertional and nonexertional limitations.

SUBSTANTIAL GAINFUL ACTIVITY

404.1571 General.
404.1572 What we mean by substantial gainful activity.
404.1573 General information about work activity.
404.1574 Evaluation guides if you are an employee.
404.1574a When and how we will average your earnings.
404.1575 Evaluation guides if you are self-employed.
404.1576 Impairment-related work expenses.

WIDOWS, WIDOWERS, AND SURVIVING DIVORCED SPOUSES

404.1577 Disability defined for widows, widowers, and surviving divorced spouses for monthly benefits payable for months prior to January 1991.
404.1578 How we determine disability for widows, widowers, and surviving divorced spouses for monthly benefits payable for months prior to January 1991.
404.1579 How we will determine whether your disability continues or ends.

BLINDNESS

404.1581 Meaning of blindness as defined in the law.
404.1582 A period of disability based on blindness.
404.1583 How we determine disability for blind persons who are age 55 or older.
404.1584 Evaluation of work activity of blind people.
404.1585 Trial work period for persons age 55 or older who are blind.
404.1586 Why and when we will stop your cash benefits.

404.1587 Circumstances under which we may suspend and terminate your benefits before we make a determination.

CONTINUING OR STOPPING DISABILITY

404.1588 Your responsibility to tell us of events that may change your disability status.
404.1589 We may conduct a review to find out whether you continue to be disabled.
404.1590 When and how often we will conduct a continuing disability review.
404.1591 If your medical recovery was expected and you returned to work.
404.1592 The trial work period.
404.1592a The reentitlement period.
404.1592b What is expedited reinstatement?
404.1592c Who is entitled to expedited reinstatement?
404.1592d How do I request reinstatement?
404.1592e How do we determine provisional benefits?
404.1592f How do we determine reinstated benefits?
404.1593 Medical evidence in continuing disability review cases.
404.1594 How we will determine whether your disability continues or ends.
404.1595 When we determine that you are not now disabled.
404.1596 Circumstances under which we may suspend and terminate your benefits before we make a determination.
404.1597 After we make a determination that you are not now disabled.
404.1597a Continued benefits pending appeal of a medical cessation determination.
404.1598 If you become disabled by another impairment(s).
404.1599 Work incentive experiments and rehabilitation demonstration projects in the disability program.

APPENDIX 1 TO SUBPART P OF PART 404—LISTING OF IMPAIRMENTS
APPENDIX 2 TO SUBPART P OF PART 404—MEDICAL-VOCATIONAL GUIDELINES

Subpart Q—Determinations of Disability

GENERAL PROVISIONS

404.1601 Purpose and scope.
404.1602 Definitions.
404.1603 Basic responsibilities for us and the State.

RESPONSIBILITIES FOR PERFORMING THE DISABILITY DETERMINATION FUNCTION

404.1610 How a State notifies us that it wishes to perform the disability determination function.
404.1611 How we notify a State whether it may perform the disability determination function.
404.1613 Disability determinations the State makes.
404.1614 Responsibilities for obtaining evidence to make disability determinations.
404.1615 Making disability determinations.
404.1616 Medical or psychological consultants.
404.1617 Reasonable efforts to obtain review by a qualified psychiatrist or psychologist.
404.1618 Notifying claimants of the disability determination.

QUICK DISABILITY DETERMINATIONS

404.1619 Quick disability determination process.

ADMINISTRATIVE RESPONSIBILITIES AND REQUIREMENTS

404.1620 General administrative requirements.
404.1621 Personnel.
404.1622 Training.
404.1623 Facilities.
404.1624 Medical and other purchased services.
404.1625 Records and reports.
404.1626 Fiscal.
404.1627 Audits.
404.1628 Property.
404.1629 Participation in research and demonstration projects.
404.1630 Coordination with other agencies.
404.1631 Confidentiality of information and records.
404.1632 Other Federal laws and regulations.
404.1633 Policies and operating instructions.

PERFORMANCE STANDARDS

404.1640 General.
404.1641 Standards of performance.
404.1642 Processing time standards.
404.1643 Performance accuracy standard.
404.1644 How and when we determine whether the processing time standards are met.
404.1645 How and when we determine whether the performance accuracy standard is met.
404.1650 Action we will take if a State agency does not meet the standards.

PERFORMANCE MONITORING AND SUPPORT

404.1660 How we will monitor.
404.1661 When we will provide performance support.
404.1662 What support we will provide.

SUBSTANTIAL FAILURE

404.1670 General.
404.1671 Good cause for not following the Act, our regulations, or other written guidelines.
404.1675 Finding of substantial failure.

HEARINGS AND APPEALS

404.1680 Notice of right to hearing on proposed finding of substantial failure.

404.1681 Disputes on matters other than substantial failure.
404.1682 Who conducts the hearings.
404.1683 Hearings and appeals process.

ASSUMPTION OF DISABILITY DETERMINATION FUNCTION

404.1690 Assumption when we make a finding of substantial failure.
404.1691 Assumption when State no longer wishes to perform the disability determination function.
404.1692 Protection of State employees.
404.1693 Limitation on State expenditures after notice.
404.1694 Final accounting by the State.

Subpart R—Representation of Parties

404.1700 Introduction.
404.1703 Definitions.
404.1705 Who may be your representative.
404.1706 Notification of options for obtaining attorney representation.
404.1707 Appointing a representative.
404.1710 Authority of a representative.
404.1713 Mandatory use of electronic services.
404.1715 Notice or request to a representative.
404.1717 Direct payment of fees to eligible non-attorney representatives.
404.1720 Fee for a representative's services.
404.1725 Request for approval of a fee.
404.1728 Proceedings before a State or Federal court.
404.1730 Payment of fees.
404.1735 [Reserved]
404.1740 Rules of conduct and standards of responsibility for representatives.
404.1745 Violations of our requirements, rules, or standards.
404.1750 Notice of charges against a representative.
404.1755 Withdrawing charges against a representative.
404.1765 Hearing on charges.
404.1770 Decision by hearing officer.
404.1775 Requesting review of the hearing officer's decision.
404.1776 Assignment of request for review of the hearing officer's decision.
404.1780 Appeals Council's review of hearing officer's decision.
404.1785 Evidence permitted on review.
404.1790 Appeals Council's decision.
404.1795 When the Appeals Council will dismiss a request for review.
404.1797 Reinstatement after suspension—period of suspension expired.
404.1799 Reinstatement after suspension or disqualification—period of suspension not expired.

Subpart S—Payment Procedures

404.1800 Introduction.
404.1805 Paying benefits.
404.1807 Monthly payment day.
404.1810 Expediting benefit payments.
404.1815 Withholding certification or payments.
404.1820 Transfer or assignment of payments.
404.1821 Garnishment of payments after disbursement.
404.1825 Joint payments to a family.

Subpart T—Totalization Agreements

GENERAL PROVISIONS

404.1901 Introduction.
404.1902 Definitions.
404.1903 Negotiating totalization agreements.
404.1904 Effective date of a totalization agreement.
404.1905 Termination of agreements.

BENEFIT PROVISIONS

404.1908 Crediting foreign periods of coverage.
404.1910 Person qualifies under more than one totalization agreement.
404.1911 Effects of a totalization agreement on entitlement to hospital insurance benefits.

COVERAGE PROVISIONS

404.1913 Precluding dual coverage.
404.1914 Certificate of coverage.
404.1915 Payment of contributions.

COMPUTATION PROVISIONS

404.1918 How benefits are computed.
404.1919 How benefits are recomputed.
404.1920 Supplementing the U.S. benefit if the total amount of the combined benefits is less than the U.S. minimum benefit.
404.1921 Benefits of less than $1 due.

OTHER PROVISIONS

404.1925 Applications.
404.1926 Evidence.
404.1927 Appeals.
404.1928 Effect of the alien non-payment provision.
404.1929 Overpayments.
404.1930 Disclosure of information.

Subpart U—Representative Payment

404.2001 Introduction.
404.2010 When payment will be made to a representative payee.
404.2011 What happens to your monthly benefits while we are finding a suitable representative payee for you?
404.2015 Information considered in determining whether to make representative payments.

404.2020 Information considered in selecting a representative payee.
404.2021 What is our order of preference in selecting a representative payee for you?
404.2022 Who may not serve as a representative payee?
404.2024 How do we investigate a representative payee applicant?
404.2025 What information must a representative payee report to us?
404.2030 How will we notify you when we decide you need a representative payee?
404.2035 What are the responsibilities of your representative payee?
404.2040 Use of benefit payments.
404.2040a Compensation for qualified organizations serving as representative payees.
404.2041 Who is liable if your representative payee misuses your benefits?
404.2045 Conservation and investment of benefit payments.
404.2050 When will we select a new representative payee for you?
404.2055 When representative payment will be stopped.
404.2060 Transfer of accumulated benefit payments.
404.2065 How does your representative payee account for the use of benefits?

Subpart V—Payments for Vocational Rehabilitation Services

GENERAL PROVISIONS

404.2101 General.
404.2102 Purpose and scope.
404.2103 Definitions.
404.2104 Participation by State VR agencies or alternate participants.
404.2106 Basic qualifications for alternate participants.

PAYMENT PROVISIONS

404.2108 Requirements for payment.
404.2109 Responsibility for making payment decisions.
404.2110 What we mean by ''SGA'' and by ''a continuous period of 9 months''.
404.2111 Criteria for determining when VR services will be considered to have contributed to a continuous period of 9 months.
404.2112 Payment for VR services in a case where an individual continues to receive disability payments based on participation in an approved VR program.
404.2114 Services for which payment may be made.
404.2115 When services must have been provided.
404.2116 When claims for payment for VR services must be made (filing deadlines).
404.2117 What costs will be paid.

ADMINISTRATIVE PROVISIONS

404.2118 Applicability of these provisions to alternate participants.
404.2119 Method of payment.
404.2120 Audits.
404.2121 Validation reviews.
404.2122 Confidentiality of information and records.
404.2123 Other Federal laws and regulations.
404.2127 Resolution of disputes.

Subpart A—Introduction, General Provisions and Definitions

AUTHORITY: Secs. 203, 205(a), 216(j), and 702(a)(5) of the Social Security Act (42 U.S.C. 403, 405(a), 416(j), and 902(a)(5)) and 48 U.S.C. 1801.

§ 404.1 Introduction.

The regulations in this part 404 (Regulations No. 4 of the Social Security Administration) relate to the provisions of title II of the Social Security Act as amended on August 28, 1950, and as further amended thereafter. The regulations in this part are divided into 22 subparts:

(a) Subpart A contains provisions relating to general definitions and use of terms.

(b) Subpart B relates to quarters of coverage and insured status requirements.

(c) Subpart C relates to the computation and recomputation of the primary insurance amount.

(d) Subpart D relates to the requirements for entitlement to monthly benefits and to the lump-sum death payment duration of entitlement and benefit rates.

(e) Subpart E contains provisions relating to the reduction and increase of insurance benefits and to deductions from benefits and lump-sum death payments.

(f) Subpart F relates to overpayments, underpayments, waiver of adjustment or recovery of overpayments and liability of certifying officers.

(g) Subpart G relates to filing of applications and other forms.

(h) Subpart H relates to evidentiary requirements for establishing an initial and continuing right to monthly benefits and for establishing a right to lump-sum death payment. (Evidentiary requirements relating to disability are contained in subpart P.)

(i) Subpart I relates to maintenance and revision of records of wages and self-employment income.

(j) Subpart J relates to initial determinations, the administrative review process, and reopening of determinations and decisions.

(k) Subpart K relates to employment, wages, self-employment and self-employment income.

(l) Subpart L is reserved.

(m) Subpart M relates to coverage of employees of State and local Governments.

(n) Subpart N relates to benefits in cases involving veterans.

(o) Subpart O relates to the interrelationship of the old-age, survivors and disability insurance program with the railroad retirement program.

(p) Subpart P relates to the determination of disability or blindness.

(q) Subpart Q relates to standards, requirements and procedures for States making determinations of disability for the Commissioner. It also sets out the Commissioner's responsibilities in carrying out the disability determination function.

(r) Subpart R relates to the provisions applicable to attorneys and other individuals who represent applicants in connection with claims for benefits.

(s) Subpart S relates to the payment of benefits to individuals who are entitled to benefits.

(t) Subpart T relates to the negotiation and administration of totalization agreements between the United States and foreign countries.

(u) Subpart U relates to the selection of a representative payee to receive benefits on behalf of a beneficiary and to the duties and responsibilities of a representative payee.

(v) Subpart V relates to payments to State vocational rehabilitative agencies (or alternate participants) for vocational rehabilitation services.

[26 FR 7054, Aug. 5, 1961; 26 FR 7760, Aug. 19, 1961, as amended at 27 FR 4513, May 11, 1962; 28 FR 14492, Dec. 31, 1963; 51 FR 11718, Apr. 7, 1986; 62 FR 38450, July 18, 1997]

§ 404.2 General definitions and use of terms.

(a) *Terms relating to the Act and regulations.* (1) *The Act* means the Social Security Act, as amended (42 U.S.C. Chapter 7).

(2) *Section* means a section of the regulations in part 404 of this chapter unless the context indicates otherwise.

(b) *Commissioner; Appeals Council; Administrative Law Judge defined.* (1) *Commissioner* means the Commissioner of Social Security.

(2) *Appeals Council* means the Appeals Council of the Office of Hearings and Appeals in the Social Security Administration or such member or members thereof as may be designated by the Chairman.

(3) *Administrative Law Judge* means an Administrative Law Judge in the Office of Hearings and Appeals in the Social Security Administration.

(c) *Miscellaneous.* (1) *Certify*, when used in connection with the duty imposed on the Commissioner by section 205(i) of the act, means that action taken by the Administration in the form of a written statement addressed to the Managing Trustee, setting forth the name and address of the person to whom payment of a benefit or lump sum, or any part thereof, is to be made, the amount to be paid, and the time at which payment should be made.

(2) *Benefit* means an old-age insurance benefit, disability insurance benefit, wife's insurance benefit, husband's insurance benefit, child's insurance benefit, widow's insurance benefit, widower's insurance benefit, mother's insurance benefit, father's insurance benefit, parent's insurance benefit, or special payment at age 72 under title II of the Act. (Lump sums, which are death payments under title II of the Act, are excluded from the term *benefit* as defined in this part to permit greater clarity in the regulations.)

(3) *Lump sum* means a lump-sum death payment under title II of the act or any person's share of such a payment.

(4) *Attainment of age.* An individual attains a given age on the first moment of the day preceding the anniversary of his birth corresponding to such age.

(5) *State*, unless otherwise indicated, includes:

(i) The District of Columbia,

(ii) The Virgin Islands,

(iii) The Commonwealth of Puerto Rico effective January 1, 1951,

(iv) Guam and American Samoa, effective September 13, 1960, generally, and for purposes of sections 210(a) and 211 of the Act effective after 1960 with respect to service performed after 1960, and effective for taxable years beginning after 1960 with respect to crediting net earnings from self-employment and self-employment income,

(v) The Territories of Alaska and Hawaii prior to January 3, 1959, and August 21, 1959, respectively, when those territories acquired statehood, and

(vi) The Commonwealth of the Northern Mariana Islands (CNMI) effective January 1, 1987; Social Security coverage for affected temporary employees of the government of the CNMI is also effective on January 1, 1987, under section 210(a)(7)(E) of the Social Security Act. In addition, Social Security coverage for affected non-temporary employees of the government of the CNMI is effective on October 1, 2012, under section 210(a)(7)(C) of the Social Security Act.

(6) *United States*, when used in a geographical sense, includes, unless otherwise indicated:

(i) The States,

(ii) The Territories of Alaska and Hawaii prior to January 3, 1959, and August 21, 1959, respectively, when they acquired statehood,

(iii) The District of Columbia,

(iv) The Virgin Islands,

(v) The Commonwealth of Puerto Rico effective January 1, 1951, (vi) Guam and American Samoa, effective September 13, 1960, generally, and for purposes of sections 210(a) and 211 of the Act, effective after 1960 with respect to service performed after 1960, and effective for taxable years beginning after 1960 with respect to crediting net earnings from self-employment and self-employment income, and

(vii) The Commonwealth of the Northern Mariana Islands effective January 1, 1987.

(7) Masculine gender includes the feminine, unless otherwise indicated.

(8) The terms defined in sections 209, 210, and 211 of the act shall have the meanings therein assigned to them.

[26 FR 7055, Aug. 5, 1961; 26 FR 7760, Aug. 19, 1961, as amended at 28 FR 1037, Feb. 2, 1963; 28 FR 14492, Dec. 31, 1963; 29 FR 15509, Nov. 19, 1964; 41 FR 32886, Aug. 6, 1976; 51 FR 11718, Apr. 7, 1986; 61 FR 41330, Aug. 8, 1996; 62 FR 38450, July 18, 1997; 69 FR 51555, Aug. 20, 2004; 79 FR 33684, June 12, 2014]

§ 404.3 General provisions.

(a) *Effect of cross references*. The cross references in the regulations in this part 404 to other portions of the regulations, when the word *see* is used, are made only for convenience and shall be given no legal effect.

(b) *Periods of limitation ending on nonwork days*. Pursuant to the provisions of section 216(j) of the act, effective September 13, 1960, where any provision of title II, or any provision of another law of the United States (other than the Internal Revenue Code of 1954) relating to or changing the effect of title II, or any regulation of the Commissioner issued under title II, provides for a period within which an act is required to be done which affects eligibility for or the amount of any benefit or payment under this title or is necessary to establish or protect any rights under this title, and such period ends on a Saturday, Sunday or Federal legal holiday or on any other day all or part of which is declared to be a nonwork day for Federal employees by statute or Executive Order, then such act shall be considered as done within such period if it is done on the first day thereafter which is not a Saturday, Sunday, or legal holiday or any other day all or part of which is declared to be a nonwork day for Federal employees either by statute or Executive Order. For purposes of this paragraph, the day on which a period ends shall include the final day of any extended period where such extension is authorized by law or by the Commissioner pursuant to law. Such extension of any period of limitation does not apply to periods during which benefits may be paid for months prior to the month an application for such benefits is filed pursuant to § 404.621, or to periods during which an application for benefits

may be accepted as such pursuant to § 404.620.

[26 FR 7055, Aug. 5, 1961, as amended at 29 FR 15509, Nov. 19, 1964; 51 FR 11718, Apr. 7, 1986; 61 FR 41330, Aug. 8, 1996; 62 FR 38450, July 18, 1997]

Subpart B—Insured Status and Quarters of Coverage

AUTHORITY: Secs. 205(a), 212, 213, 214, 216, 217, 223, and 702(a)(5) of the Social Security Act (42 U.S.C. 405(a), 412, 413, 414, 416, 417, 423, and 902(a)(5)).

SOURCE: 45 FR 25384, Apr. 15, 1980, unless otherwise noted.

GENERAL

§ 404.101 Introduction.

(a) *Insured status.* This subpart explains what we mean when we say that a person has insured status under the social security program. It also describes how a person may become fully insured, currently insured or insured for disability benefits. Your insured status is a basic factor in determining if you are entitled to old-age or disability insurance benefits or to a period of disability. It is also a basic factor in determining if dependents' or survivors' insurance benefits or a lump-sum death payment are payable based on your earnings record. If you are neither fully nor currently insured, no benefits are payable based on your earnings. (Subpart D of this part describes these benefits and the kind of insured status required for each.) In §§ 404.110 through 404.120 we tell how we determine if you are fully or currently insured. The rules for determining if you are insured for purposes of establishing a period of disability or becoming entitled to disability insurance benefits are in §§ 404.130 through 404.133. Whether you have the required insured status depends on the number of quarters of coverage (QCs) you have acquired.

(b) *QCs.* This subpart also sets out our rules on crediting you with QCs. QCs are used in determining insured status. In general, you are credited with QCs based on the wages you are paid and the self-employment income you derive during certain periods. (See subpart K of this part for a definition of *wages* and *self-employment income.*) Our rules on how and when you acquire a QC are contained in §§ 404.140 through 404.146.

§ 404.102 Definitions.

For the purpose of this subpart—

Act means the Social Security Act, as amended.

Age means how many years old you are. You reach a particular age on the day before your birthday. For example, if your sixty-second birthday is on July 1, 1979, you became age 62 on June 30, 1979.

Quarter or *calendar quarter* means a period of three calendar months ending March 31, June 30, September 30, or December 31 of any year.

We, our, or *us* means the Social Security Administration.

You or *your* means the worker whose insured status is being considered.

FULLY INSURED STATUS

§ 404.110 How we determine fully insured status.

(a) *General.* We describe how we determine the number of quarters of coverage (QCs) you need to be fully insured in paragraphs (b), (c), and (d) of this section. The table in § 404.115 may be used to determine the number of QCs you need to be fully insured under paragraph (b) of this section. We consider certain World War II veterans to have died fully insured (see § 404.111). We also consider certain employees of private nonprofit organizations to be fully insured if they meet special requirements (see § 404.112).

(b) *How many QCs you need to be fully insured.* (1) You need at least 6 QCs but not more than 40 QCs to be fully insured. A person who died before 1951 with at least 6 QCs is fully insured.

(2) You are fully insured for old-age insurance benefits if you have one QC (whenever acquired) for each calendar year elapsing after 1950 or, if later, after the year in which you became age 21, and before the year you reach retirement age, that is, before—

(i) The year you become age 62, if you are a woman;

(ii) The year you become age 62, if you are a man who becomes age 62 after 1974;

(iii) The year 1975, if you are a man who became age 62 in 1973 or 1974; or

(iv) The year you became age 65, if you are a man who became age 62 before 1973.

(3) A person who is otherwise eligible for survivor's benefits and who files an application will be entitled to benefits based on your earnings if you die fully insured. You will be fully insured if you had one QC (whenever acquired) for each calendar year elapsing after 1950 or, if later, after the year you became age 21, and before the earlier of the following years:

(i) The year you die; or

(ii) The year you reach retirement age as shown in paragraph (b)(2) of this section.

(c) *How a period of disability affects the number of QCs you need.* In determining the number of elapsed years under paragraph (b) of this section, we do not count as an elapsed year any year which is wholly or partly in a period of disability we established for you. For example, if we established a period of disability for you from December 5, 1975 through January 31, 1977, the three years, 1975, 1976 and 1977, would not be counted as elapsed years.

(d) *How we credit QCs for fully insured status based on your total wages before 1951*—(1) *General.* For purposes of paragraph (b) of this section, we may use the following rules in crediting QCs based on your wages before 1951 instead of the rule in § 404.141(b)(1).

(i) We may consider you to have one QC for each $400 of your total wages before 1951, as defined in paragraph (d)(2) of this section, if you have at least 7 elapsed years as determined under paragraph (b)(2) or (b)(3) of this section; and the number of QCs determined under this paragraph plus the number of QCs credited to you for periods after 1950 make you fully insured.

(ii) If you file an application in June 1992 or later and you are not entitled to a benefit under § 404.380 or section 227 of the Act in the month the application is made, we may consider you to have at least one QC before 1951 if you have $400 or more total wages before 1951, as defined in paragraph (d)(2) of this section, provided that the number of QCs credited to you under this paragraph plus the number of QCs credited to you for periods after 1950 make you fully insured.

(2) *What are total wages before 1951.* For purposes of paragraph (d)(1) of this section, your total wages before 1951 include—

(i) Remuneration credited to you before 1951 on the records of the Secretary;

(ii) Wages considered paid to you before 1951 under section 217 of the Act (relating to benefits in case of veterans);

(iii) Compensation under the Railroad Retirement Act of 1937 before 1951 that can be credited to you under title II of the Social Security Act; and

(iv) Wages considered paid to you before 1951 under section 231 of the Act (relating to benefits in case of certain persons interned in the United States during World War II).

(e) *When your fully insured status begins.* You are fully insured as of the first day of the calendar quarter in which you acquire the last needed QC (see § 404.145).

[45 FR 25384, Apr. 15, 1980, as amended at 50 FR 36573, Sept. 9, 1985; 57 FR 23156, June 2, 1992]

§ 404.111 When we consider a person fully insured based on World War II active military or naval service.

We consider that a person, who was not otherwise fully insured, died fully insured if—

(a) The person was in the active military or naval service of the United States during World War II;

(b) The person died within three years after separation from service and before July 27, 1954; and

(c) The conditions in § 404.1350 that permit us to consider the person fully insured are met.

(d) The provisions of this section do not apply to persons filing applications after May 31, 1992, unless a survivor is entitled to benefits under section 202 of the Act based on the primary insurance amount of the fully insured person for the month preceding the month in which the application is made.

[45 FR 25384, Apr. 15, 1980, as amended at 57 FR 23157, June 2, 1992]

§ 404.112 When we consider certain employees of private nonprofit organizations to be fully insured.

If you are age 55 or over on January 1, 1984, and are on that date an employee of an organization described in § 404.1025(a) which does not have in effect a waiver certificate under section 3121(k) of the Code on that date and whose employees are mandatorily covered as a result of section 102 of Pub. L. 98–21, we consider you to be fully insured if you meet the following requirements:

Your age on January 1, 1984 is—	QC's acquired after Dec. 31, 1983
60 or over	6
59 or over but less than age 60	8
58 or over but less than age 59	12
57 or over but less than age 58	16
55 or over but less than age 57	20

[50 FR 36573, Sept. 9, 1985]

§ 404.115 Table for determining the quarters of coverage you need to be fully insured.

(a) *General.* You may use the following table to determine the number of quarters of coverage (QCs) you need to be fully insured under § 404.110. Paragraphs (b) and (c) of this section tell you how to use this table.

Worker who reaches retirement age as described in § 404.110(b)(2)			Worker who dies before reaching retirement age as described in § 404.110(b)(2)		
Col. I—Date of birth	Col. II [1]		Col. III [2]—Year of death	Col. IV [3]	Col. V [4]—Age in year of death
	Men	Women			
Jan. 1, 1893 or earlier	6	6	[5] 1957	6	[6] 28
Jan. 2, 1893 to Jan. 1, 1894	7	6	1958	7	29
Jan. 2, 1894 to Jan. 1, 1895	8	6	1959	8	30
Jan. 2, 1895 to Jan. 1, 1896	9	6	1960	9	31
Jan. 2, 1896 to Jan. 1, 1897	10	7	1961	10	32
Jan. 2, 1897 to Jan. 1, 1898	11	8	1962	11	33
Jan. 2, 1898 to Jan. 1, 1899	12	9	1963	12	34
Jan. 2, 1899 to Jan. 1, 1900	13	10	1964	13	35
Jan. 2, 1900 to Jan. 1, 1901	14	11	1965	14	36
Jan. 2, 1901 to Jan. 1, 1902	15	12	1966	15	37
Jan. 2, 1902 to Jan. 1, 1903	16	13	1967	16	38
Jan. 2, 1903 to Jan. 1, 1904	17	14	1968	17	39
Jan. 2, 1904 to Jan. 1, 1905	18	15	1969	18	40
Jan. 2, 1905 to Jan. 1, 1906	19	16	1970	19	41
Jan. 2, 1906 to Jan. 1, 1907	20	17	1971	20	42
Jan. 2, 1907 to Jan. 1, 1908	21	18	1972	21	43
Jan. 2, 1908 to Jan. 1, 1909	22	19	1973	22	44
Jan. 2, 1909 to Jan. 1, 1910	23	20	1974	23	45
Jan. 2, 1910 to Jan. 1, 1911	24	21	1975	24	46
Jan. 2, 1911 to Jan. 1, 1912	24	22	1976	25	47
Jan. 2, 1912 to Jan. 1, 1913	24	23	1977	26	48
Jan. 2, 1913 to Jan. 1, 1914	24	24	1978	27	49
Jan. 2, 1914 to Jan. 1, 1915	25	25	1979	28	50
Jan. 2, 1915 to Jan. 1, 1916	26	26	1980	29	51
Jan. 2, 1916 to Jan. 1, 1917	27	27	1981	30	52
Jan. 2, 1917 to Jan. 1, 1918	28	28	1982	31	53
Jan. 2, 1918 to Jan. 1, 1919	29	29	1983	32	54
Jan. 2, 1919 to Jan. 1, 1920	30	30	1984	33	55
Jan. 2, 1920 to Jan. 1, 1921	31	31	1985	34	56
Jan. 2, 1921 to Jan. 1, 1922	32	32	1986	35	57
Jan. 2, 1922 to Jan. 1, 1923	33	33	1987	36	58
Jan. 2, 1923 to Jan. 1, 1924	34	34	1988	37	59
Jan. 2, 1924 to Jan. 1, 1925	35	35	1989	38	60
Jan. 2, 1925 to Jan. 1, 1926	36	36	1990	39	61
Jan. 2, 1926 to Jan. 1, 1927	37	37	[7] 1991	40	62
Jan. 2, 1927 to Jan. 1, 1928	38	38	.....	.....	.....
Jan. 2, 1928 to Jan. 1, 1929	39	39	.....	.....	.....
Jan. 2, 1929 or later	40	.....	.....	.....	

[1] Number of QCs required for fully insured status; living worker or worker who dies after reaching retirement age.
[2] Worker born before Jan. 2, 1930 who dies before reaching retirement age.
[3] Number of QCs required for fully insured status.
[4] Worker born Jan. 2, 1930 or later, who dies before reaching retirement age.
[5] Or earlier.
[6] Or younger.
[7] Or later.

(b) *Number of QCs you need.* The QCs you need for fully insured status are in column II opposite your date of birth in column I. If a worker dies before reaching retirement age as described in § 404.110(b)(2), the QCs needed for fully insured status are shown in column IV opposite—

(1) The year of death in column III, if the worker was born before January 2, 1930; or

(2) The age in the year of death in column V, if the worker was born after January 1, 1930.

(c) *How a period of disability affects the number of QCs you need.* If you had a period of disability established for you, it affects the number of QCs you need to be fully insured (see § 404.110(c)). For each year which is wholly or partly in a period of disability, subtract one QC from the number of QCs shown in the appropriate line and column of the table as explained in paragraph (b) of this section.

CURRENTLY INSURED STATUS

§ 404.120 How we determine currently insured status.

(a) *What the period is for determining currently insured status.* You are currently insured if you have at least 6 quarters of coverage (QCs) during the 13-quarter period ending with the quarter in which you—

(1) Die;

(2) Most recently became entitled to disability insurance benefits; or

(3) Became entitled to old-age insurance benefits.

(b) *What quarters are not counted as part of the 13-quarter period.* We do not count as part of the 13-quarter period any quarter all or part of which is included in a period of disability established for you, except that the first and last quarters of the period of disability may be counted if they are QCs (see § 404.146(d)).

DISABILITY INSURED STATUS

§ 404.130 How we determine disability insured status.

(a) *General.* We have four different rules for determining if you are insured for purposes of establishing a period of disability or becoming entitled to disability insurance benefits. To have disability insured status, you must meet one of these rules and you must be fully insured (see § 404.132 which tells when the period ends for determining the number of quarters of coverage (QCs) you need to be fully insured).

(b) *Rule I—You must meet the 20/40 requirement.* You are insured in a quarter for purposes of establishing a period of disability or becoming entitled to disability insurance benefits if in that quarter—

(1) You are fully insured; and

(2) You have at least 20 QCs in the 40-quarter period (see paragraph (f) of this section) ending with that quarter.

(c) *Rule II—You become disabled before age 31.* You are insured in a quarter for purposes of establishing a period of disability or becoming entitled to disability insurance benefits if in that quarter—

(1) You have not become (or would not become) age 31;

(2) You are fully insured; and

(3) You have QCs in at least one-half of the quarters during the period ending with that quarter and beginning with the quarter after the quarter you became age 21; however—

(i) If the number of quarters during this period is an odd number, we reduce the number by one; and

(ii) If the period has less than 12 quarters, you must have at least 6 QCs in the 12-quarter period ending with that quarter.

(d) *Rule III—You had a period of disability before age 31.* You are insured in a quarter for purposes of establishing a period of disability or becoming entitled to disability insurance benefits if in that quarter—

(1) You are disabled again at age 31 or later after having had a prior period of disability established which began before age 31 and for which you were only insured under paragraph (c) of this section; and

(2) You are fully insured and have QCs in at least one-half the calendar quarters in the period beginning with the quarter after the quarter you became age 21 and through the quarter in which the later period of disability begins, up to a maximum of 20 QCs out of 40 calendar quarters; however—

(i) If the number of quarters during this period is an odd number, we reduce the number by one;

(ii) If the period has less than 12 quarters, you must have at least 6 QCs in the 12-quarter period ending with that quarter; and

(iii) No monthly benefits may be paid or increased under Rule III before May 1983.

(e) *Rule IV—You are statutorily blind.* You are insured in a quarter for purposes of establishing a period of disability or becoming entitled to disability insurance benefits if in that quarter—

(1) You are disabled by blindness as defined in § 404.1581; and

(2) You are fully insured.

(f) *How we determine the 40-quarter or other period.* In determining the 40-quarter period or other period in paragraph (b), (c), or (d) of this section, we do not count any quarter all or part of which is in a prior period of disability established for you, unless the quarter is the first or last quarter of this period and the quarter is a QC. However, we will count all the quarters in the prior period of disability established for you if by doing so you would be entitled to benefits or the amount of the benefit would be larger.

[49 FR 28547, July 13, 1984, as amended at 55 FR 7313, Mar. 1, 1990]

§ 404.131 When you must have disability insured status.

(a) *For a period of disability.* To establish a period of disability, you must have disability insured status in the quarter in which you become disabled or in a later quarter in which you are disabled.

(b) *For disability insurance benefits.* (1) To become entitled to disability insurance benefits, you must have disability insured status in the first full month that you are disabled as described in § 404.1501(a), or if later—

(i) The 17th month (if you have to serve a waiting period described in § 404.315(d)) before the month in which you file an application for disability insurance benefits; or

(ii) The 12th month (if you do not have to serve a waiting period) before the month in which you file an application for disability insurance benefits.

(2) If you do not have disability insured status in a month specified in paragraph (b)(1) of this section, you will be insured for disability insurance benefits beginning with the first month after that month in which you do meet the insured status requirement and you also meet all other requirements for disability insurance benefits described in § 404.315.

§ 404.132 How we determine fully insured status for a period of disability or disability insurance benefits.

In determining if you are fully insured for purposes of paragraph (b), (c), (d), or (e) of § 404.130 on disability insured status, we use the fully insured status requirements in § 404.110, but apply the following rules in determining when the period of elapsed years ends:

(a) If you are a woman, or a man born after January 1, 1913, the period of elapsed years in § 404.110(b) used in determining the number of quarters of coverage (QCs) you need to be fully insured ends as of the earlier of—

(1) The year you become age 62; or

(2) The year in which—

(i) Your period of disability begins;

(ii) Your waiting period begins (see § 404.315(d)); or

(iii) You become entitled to disability insurance benefits (if you do not have to serve a waiting period).

(b) If you are a man born before January 2, 1913, the period of elapsed years in § 404.110(b) used in determining the number of QCs you need to be fully insured ends as of the earlier of—

(1) The year 1975; or

(2) The year specified in paragraph (a)(2) of this section.

[45 FR 25384, Apr. 15, 1980, as amended at 49 FR 28547, July 13, 1984]

§ 404.133 When we give you quarters of coverage based on military service to establish a period of disability.

For purposes of establishing a period of disability only, we give you quarters of coverage (QCs) for your military service before 1957 (see subpart N of this part). We do this even though we may not use that military service for other purposes of title II of the Act because a periodic benefit is payable from

another Federal agency based in whole or in part on the same period of military service.

QUARTERS OF COVERAGE

§ 404.140 What is a quarter of coverage.

(a) *General.* A quarter of coverage (QC) is the basic unit of social security coverage used in determining a worker's insured status. We credit you with QCs based on your earnings covered under social security.

(b) *How we credit QCs based on earnings before 1978 (General).* Before 1978, wages were generally reported on a quarterly basis and self-employment income was reported on an annual basis. For the most part, we credit QCs for calendar years before 1978 based on your quarterly earnings. For these years, as explained in § 404.141, we generally credit you with a QC for each calendar quarter in which you were paid at least $50 in wages or were credited with at least $100 of self-employment income. Section 404.142 tells how self-employment income derived in a taxable year beginning before 1978 is credited to specific calendar quarters for purposes of § 404.141.

(c) *How we credit QCs based on earnings after 1977 (General).* After 1977, both wages and self-employment income are generally reported on an annual basis. For calendar years after 1977, as explained in § 404.143, we generally credit you with a QC for each part of your total covered earnings in a calendar year that equals the amount required for a QC in that year. Section 404.143 also tells how the amount required for a QC will be increased in the future as average wages increase. Section 404.144 tells how self-employment income derived in a taxable year beginning after 1977 is credited to specific calendar years for purposes of § 404.143.

(d) *When a QC is acquired and when a calendar quarter is not a QC (general).* Section 404.145 tells when a QC is acquired and § 404.146 tells when a calendar quarter cannot be a QC. These rules apply when we credit QCs under § 404.141 or § 404.143.

§ 404.141 How we credit quarters of coverage for calendar years before 1978.

(a) *General.* The rules in this section tell how we credit calendar quarters as quarters of coverage (QCs) for calendar years before 1978. We credit you with a QC for a calendar quarter based on the amount of wages you were paid and self-employment income you derived during certain periods. The rules in paragraphs (b), (c), and (d) of this section are subject to the limitations in § 404.146, which tells when a calendar quarter cannot be a QC.

(b) *How we credit QCs based on wages paid in, or self-employment income credited to, a calendar quarter.* We credit you with a QC for a calendar quarter in which—

(1) You were paid wages of $50 or more (see paragraph (c) of this section for an exception relating to wages paid for agricultural labor); or

(2) You were credited (under § 404.142) with self-employment income of $100 or more.

(c) *How we credit QCs based on wages paid for agricultural labor in a calendar year after 1954.* (1) We credit QCs based on wages for agricultural labor depending on the amount of wages paid during a calendar year for that work. If you were paid wages for agricultural labor in a calendar year after 1954 and before 1978, we credit you with QCs for calendar quarters in that year which are not otherwise QCs according to the following table.

If the wages paid to you in a calendar year for agricultural labor were	We credit you with	And assign: [1]
$400 or more	4 QCs	All.
At least $300 but less than $400.	3 QCs	Last 3.
At least $200 but less than $300.	2 QCs	Last 2.
At least $100 but less than $200.	1 QC	Last.
Less than $100	No QCs.	

[1] One QC to each of the following calendar quarters in that year.

(2) When we assign QCs to calendar quarters in a year as shown in the table in paragraph (c)(1) of this section, you might not meet (or might not meet as early in the year as otherwise possible)

the requirements to be fully or currently insured, to be entitled to a computation or recomputation of your primary insurance amount, or to establish a period of disability. If this happens, we assign the QCs to different quarters in that year than those shown in the table if this assignment permits you to meet these requirements (or meet them earlier in the year). We can only reassign QCs for purposes of meeting these requirements.

(d) *How we credit QCs based on wages paid or self-employment income derived in a year.* (1) If you were paid wages in a calendar year after 1950 and before 1978 at least equal to the annual wage limitation in effect for that year as described in §§ 404.1047 and 404.1096, we credit you with a QC for each quarter in that calendar year. If you were paid at least $3,000 wages in a calendar year before 1951, we credit you with a QC for each quarter in that calendar year.

(2) If you derived self-employment income (or derived self-employment income and also were paid wages) during a taxable year beginning after 1950 and before 1978 at least equal to the self-employment income and wage limitation in effect for that year as described in § 404.1068(b), we credit you with a QC for each calendar quarter wholly or partly in that taxable year.

[45 FR 25384, Apr. 15, 1980; 45 FR 41931, June 23, 1980, as amended at 70 FR 14977, Mar. 24, 2005]

§ 404.142 How we credit self-employment income to calendar quarters for taxable years beginning before 1978.

In crediting quarters of coverage under § 404.141(b)(2), we credit any self-employment income you derived during a taxable year that began before 1978 to calendar quarters as follows:

(a) If your taxable year was a calendar year, we credit your self-employment income equally to each quarter of that calendar year.

(b) If your taxable year was not a calendar year (that is, it began on a date other than January 1, or was less than a calendar year), we credit your self-employment income equally—

(1) To the calendar quarter in which your taxable year ended; and

(2) To each of the next three or fewer preceding quarters that were wholly or partly in your taxable year.

§ 404.143 How we credit quarters of coverage for calendar years after 1977.

(a) *Crediting quarters of coverage (QCs).* For calendar years after 1977, we credit you with a QC for each part of the total wages paid and self-employment income credited (under § 404.144) to you in a calendar year that equals the amount required for a QC in that year. For example, if the total of your wages and self-employment income for a calendar year is more than twice, but less than 3 times, the amount required for a QC in that year, we credit you with only 2 QCs for the year. The rules for crediting QCs in this section are subject to the limitations in § 404.146, which tells when a calendar quarter cannot be a QC. In addition, we cannot credit you with more than four QCs for any calendar year. The amount of wages and self-employment income that you must have for each QC is—

(1) $250 for calendar year 1978; and

(2) For each calendar year after 1978, an amount determined by the Commissioner for that year (on the basis of a formula in section 213(d)(2) of the Act which reflects national increases in average wages). The amount determined by the Commissioner is published in the FEDERAL REGISTER on or before November 1 of the preceding year and included in the appendix to this subpart.

(b) *Assigning QCs.* We assign a QC credited under paragraph (a) of this section to a specific calendar quarter in the calendar year only if the assignment is necessary to—

(1) Give you fully or currently insured status;

(2) Entitle you to a computation or recomputation of your primary insurance amount; or

(3) Permit you to establish a period of disability.

[45 FR 25834, Apr. 15, 1980, as amended at 62 FR 38450, July 18, 1997]

§ 404.144 How we credit self-employment income to calendar years for taxable years beginning after 1977.

In crediting quarters of coverage under § 404.143(a), we credit self-employment income you derived during a taxable year that begins after 1977 to calendar years as follows:

(a) If your taxable year is a calendar year or begins and ends within the same calendar year, we credit your self-employment income to that calendar year.

(b) If your taxable year begins in one calendar year and ends in the following calendar year, we allocate proportionately your self-employment income to the two calendar years on the basis of the number of months in each calendar year which are included completely within your taxable year. We consider the calendar month in which your taxable year ends as included completely within your taxable year.

Example: For the taxable year beginning May 15, 1978, and ending May 14, 1979, your self-employment income is $1200. We credit 7/12 ($700) of your self-employment income to calendar year 1978 and 5/12 ($500) of your self-employment income to calendar year 1979.

§ 404.145 When you acquire a quarter of coverage.

If we credit you with a quarter of coverage (QC) for a calendar quarter under paragraph (b), (c), or (d) of § 404.141 for calendar years before 1978 or assign it to a specific calendar quarter under paragraph (b) of § 404.143 for calendar years after 1977, you acquire the QC as of the first day of the calendar quarter.

§ 404.146 When a calendar quarter cannot be a quarter of coverage.

This section applies when we credit you with quarters of coverage (QCs) under § 404.141 for calendar years before 1978 and under § 404.143 for calendar years after 1977. We cannot credit you with a QC for—

(a) A calendar quarter that has not begun;

(b) A calendar quarter that begins after the quarter of your death;

(c) A calendar quarter that has already been counted as a QC; or

(d) A calendar quarter that is included in a period of disability established for you, unless—

(1) The quarter is the first or the last quarter of this period; or

(2) The period of disability is not taken into consideration (see § 404.320(a)).

Appendix to Subpart B of Part 404—Quarter of Coverage Amounts for Calendar Years After 1978

This appendix shows the amount determined by the Commissioner that is needed for a quarter of coverage for each year after 1978 as explained in § 404.143. We publish the amount as a Notice in the Federal Register on or before November 1 of the preceding year. The amounts determined by the Commissioner are as follows:

Calendar year	Amount needed
1979	$260
1980	290
1981	310
1982	340
1983	370
1984	390
1985	410
1986	440
1987	460
1988	470
1989	500
1990	520
1991	540
1992	570

[45 FR 25384, Apr. 15, 1980, as amended at 52 FR 8247, Mar. 17, 1987; 57 FR 44096, Sept. 24, 1992; 62 FR 38450, July 18, 1997]

Subpart C—Computing Primary Insurance Amounts

Authority: Secs. 202(a), 205(a), 215, and 702(a)(5) of the Social Security Act (42 U.S.C. 402(a), 405(a), 415, and 902(a)(5)).

Source: 47 FR 30734, July 15, 1982, unless otherwise noted.

General

§ 404.201 What is included in this subpart?

In this subpart we describe how we compute your primary insurance amount (PIA), how and when we will recalculate or recompute your PIA to include credit for additional earnings, and how we automatically adjust your PIA to reflect changes in the cost of living.

(a) *What is my primary insurance amount?* Your primary insurance amount (PIA) is the basic figure we use to determine the monthly benefit amount payable to you and your family. For example, if you retire in the month you attain full retirement age (as defined in § 404.409) or if you become disabled, you will be entitled to a monthly benefit equal to your PIA. If you retire prior to full retirement age your monthly benefit will be reduced as explained in §§ 404.410–404.413. Benefits to other members of your family are a specified percentage of your PIA as explained in subpart D. Total benefits to your family are subject to a maximum as explained in § 404.403.

(b) *How is this subpart organized?* (1) In §§ 404.201 through 404.204, we explain some introductory matters.

(2) In §§ 404.210 through 404.213, we describe the average-indexed-monthly-earnings method we use to compute the primary insurance amount (PIA) for workers who attain age 62 (or become disabled or die before age 62) after 1978.

(3) In §§ 404.220 through 404.222, we describe the average-monthly-wage method we use to compute the PIA for workers who attain age 62 (or become disabled or die before age 62) before 1979.

(4) In §§ 404.230 through 404.233, we describe the guaranteed alternative method we use to compute the PIA for people who attain age 62 after 1978 but before 1984.

(5) In §§ 404.240 through 404.243, we describe the old-start method we use to compute the PIA for those who had all or substantially all of their social security covered earnings before 1951.

(6) In §§ 404.250 through 404.252, we describe special rules we use to compute the PIA for a worker who previously had a period of disability.

(7) In §§ 404.260 through 404.261, we describe how we compute the special minimum PIA for long-term, low-paid workers.

(8) In §§ 404.270 through 404.278, we describe how we automatically increase your PIA because of increases in the cost of living.

(9) In §§ 404.280 through 404.288, we describe how and when we will recompute your PIA to include additional earnings which were not used in the original computation.

(10) In § 404.290 we describe how and when we will recalculate your PIA.

(11) Appendices I–VII contain material such as figures and formulas that we use to compute PIAs.

[68 FR 4701, Jan. 30, 2003]

§ 404.202 Other regulations related to this subpart.

This subpart is related to several others. In subpart B of this part, we describe how you become insured for social security benefits as a result of your work in covered employment. In subpart D, we discuss the different kinds of social security benefits available—old-age and disability benefits for you and benefits for your dependents and survivors—the amount of the benefits, and the requirements you and your family must meet to qualify for them; your work status, your age, the size of your family, and other factors may affect the amount of the benefits for you and your family. Rules relating to deductions, reductions, and nonpayment of benefits we describe in subpart E. In subpart F of this part, we describe what we do when a recalculation or recomputation of your primary insurance amount (as described in this subpart) results in our finding that you and your family have been overpaid or underpaid. In subparts G and H of this part, we tell how to apply for benefits and what evidence is needed to establish entitlement to them. In subpart J of this part, we describe how benefits are paid. Then in subparts I, K, N, and O of this part, we discuss your earnings that are taxable and creditable for social security purposes (and how we keep records of them), and deemed military wage credits which may be used in finding your primary insurance amount.

§ 404.203 Definitions.

(a) *General definitions.* As used in this subpart—

Ad hoc increase in primary insurance amounts means an increase in primary insurance amounts enacted by the Congress and signed into law by the President.

Entitled means that a person has applied for benefits and has proven his or

her right to them for a given period of time.

We, *us*, or *our* means the Social Security Administration.

You or *your* means the insured worker who has applied for benefits or a deceased insured worker on whose social security earnings record someone else has applied.

(b) *Other definitions*. To make it easier to find them, we have placed other definitions in the sections of this subpart in which they are used.

[47 FR 30734, July 15, 1982, as amended at 62 FR 38450, July 18, 1997]

§ 404.204 Methods of computing primary insurance amounts—general.

(a) *General*. We compute most workers' primary insurance amounts under one of two major methods. There are, in addition, several special methods of computing primary insurance amounts which we apply to some workers. Your primary insurance amount is the highest of all those computed under the methods for which you are eligible.

(b) *Major methods*. (1) If after 1978 you reach age 62, or become disabled or die before age 62, we compute your primary insurance amount under what we call the *average-indexed-monthly-earnings* method, which is described in §§ 404.210 through 404.212. The earliest of the three dates determines the computation method we use.

(2) If before 1979 you reached age 62, became disabled, or died, we compute your primary insurance amount under what we call the *average-monthly-wage* method, described in §§ 404.220 through 404.222.

(c) *Special methods*. (1) Your primary insurance amount, computed under any of the special methods for which you are eligible as described in this paragraph, may be substituted for your primary insurance amount computed under either major method described in paragraph (b) of this section.

(2) If you reach age 62 during the period 1979–1983, your primary insurance amount is guaranteed to be the highest of—

(i) The primary insurance amount we compute for you under the average-indexed-monthly-earnings method;

(ii) The primary insurance amount we compute for you under the average-monthly-wage method, as modified by the rules described in §§ 404.230 through 404.233; or

(iii) The primary insurance amount computed under what we call the *old-start* method; as described in §§ 404.240 through 404.242.

(3) If you had all or substantially all of your social security earnings before 1951, we will also compute your primary insurance amount under what we call the *old-start* method.

(4) We compute your primary insurance amount under the rules in §§ 404.250 through 404.252, if—

(i) You were disabled and received social security disability insurance benefits sometime in your life;

(ii) Your disability insurance benefits were terminated because of your recovery or because you engaged in substantial gainful activity; and

(iii) You are, after 1978, re-entitled to disability insurance benefits, or entitled to old-age insurance benefits, or have died.

(5) In some situations, we use what we call a *special minimum* computation, described in §§ 404.260 through 404.261, to find your primary insurance amount. Computations under this method reflect long-term, low-wage attachment to covered work.

AVERAGE-INDEXED-MONTHLY-EARNINGS METHOD OF COMPUTING PRIMARY INSURANCE AMOUNTS

§ 404.210 Average-indexed-monthly-earnings method.

(a) *Who is eligible for this method*. If after 1978, you reach age 62, or become disabled or die before age 62, we will compute your primary insurance amount under the average-indexed-monthly-earnings method.

(b) *Steps in computing your primary insurance amount under the average-indexed-monthly-earnings method*. We follow these three major steps in computing your primary insurance amount:

(1) First, we find your *average indexed monthly earnings*, as described in § 404.211;

(2) Second, we find the *benefit formula* in effect for the year you reach age 62, or become disabled or die before age 62, as described in § 404.212; and

(3) Then, we apply that benefit formula to your average indexed monthly earnings to find your primary insurance amount, as described in § 404.212.

(4) Next, we apply any automatic cost-of-living or *ad hoc* increases in primary insurance amounts that became effective in or after the year you reached age 62, unless you are receiving benefits based on the minimum primary insurance amount, in which case not all the increases may be applied, as described in § 404.277.

§ 404.211 Computing your average indexed monthly earnings.

(a) *General.* In this method, your social security earnings after 1950 are *indexed*, as described in paragraph (d) of this section, then averaged over the period of time you can reasonably have been expected to have worked in employment or self-employment covered by social security. (Your earnings before 1951 are not used in finding your average indexed monthly earnings.)

(b) *Which earnings may be used in computing your average indexed monthly earnings*—(1) *Earnings.* In computing your average indexed monthly earnings, we use wages, compensation, self-employment income, and deemed military wage credits (see §§ 404.1340 through 404.1343) that are creditable to you for social security purposes for years after 1950.

(2) *Computation base years.* We use your earnings in your *computation base years* in finding your average indexed monthly earnings. All years after 1950 up to (but not including) the year you become entitled to old-age or disability insurance benefits, and through the year you die if you had not been entitled to old-age or disability benefits, are computation base years for you. The year you become entitled to benefits and following years may be used as computation base years in a recomputation if their use would result in a higher primary insurance amount. (See §§ 404.280 through 404.287.) However, years after the year you die may not be used as computation base years even if you have earnings credited to you in those years. Computation base years do not include years wholly within a period of disability unless your primary insurance amount would be higher by using the disability years. In such situations, we count all the years during the period of disability, even if you had no earnings in some of them.

(c) *Average of the total wages.* Before we compute your average indexed monthly earnings, we must first know the ''average of the total wages'' of all workers for each year from 1951 until the second year before you become eligible. The average of the total wages for years after 1950 are shown in appendix I. Corresponding figures for more recent years which have not yet been incorporated into this appendix are published in the FEDERAL REGISTER on or before November 1 of the succeeding year. ''Average of the total wages'' (or ''average wage'') means:

(1) For the years 1951 through 1977, four times the amount of average taxable wages that were reported to the Social Security Administration for the first calendar quarter of each year for social security tax purposes. For years prior to 1973, these average wages were determined from a sampling of these reports.

(2) For the years 1978 through 1990, all remuneration reported as wages on Form W-2 to the Internal Revenue Service for all employees for income tax purposes, divided by the number of wage earners. We adjusted those averages to make them comparable to the averages for 1951–1977. For years after 1977, the term includes remuneration for services not covered by social security and remuneration for covered employment in excess of that which is subject to FICA contributions.

(3) For years after 1990, all remuneration reported as wages on Form W-2 to the Internal Revenue Service for all employees for income tax purposes, including remuneration described in paragraph (c)(2) of this section, plus contributions to certain deferred compensation plans described in section 209(k) of the Social Security Act (also reported on Form W-2), divided by the number of wage earners. If both distributions from and contributions to any such deferred compensation plan are reported on Form W-2, we will include only the contributions in the calculation of the average of the total wages. We will adjust those averages to

make them comparable to the averages for 1951–1990.

(d) *Indexing your earnings.* (1) The first step in indexing your social security earnings is to find the relationship (under paragraph (d)(2) of this section) between—

(i) The average wage of all workers in your computation base years; and

(ii) The average wage of all workers in your *indexing year.* As a general rule, your indexing year is the second year before the earliest of the year you reach age 62, or become disabled or die before age 62. However, your indexing year is determined under paragraph (d)(4) of this section if you die before age 62, your surviving spouse or surviving divorced spouse is first eligible for benefits after 1984, and the indexing year explained in paragraph (d)(4) results in a higher widow(er)'s benefit than results from determining the indexing year under the general rule.

(2) To find the relationship, we divide the average wages for your indexing year, in turn, by the average wages for each year beginning with 1951 and ending with your indexing year. We use the quotients found in these divisions to index your earnings as described in paragraph (d)(3) of this section.

(3) The second step in indexing your social security earnings is to multiply the actual year-by-year dollar amounts of your earnings (up to the maximum amounts creditable, as explained in §§ 404.1047 and 404.1096 of this part) by the quotients found in paragraph (d)(2) of this section for each of those years. We round the results to the nearer penny. (The quotient for your indexing year is 1.0; this means that your earnings in that year are used in their actual dollar amount; any earnings after your indexing year that may be used in computing your average indexed monthly earnings are also used in their actual dollar amount.)

Example: Ms. A reaches age 62 in July 1979. Her year-by-year social security earnings since 1950 are as follows:

Year	Earnings
1951	$3,200
1952	3,400
1953	3,300
1954	3,600
1955	3,700
1956	3,700
1957	4,000
1958	4,200
1959	4,400
1960	4,500
1961	2,800
1962	2,200
1963	0
1964	0
1965	3,700
1966	4,500
1967	5,400
1968	6,200
1969	6,900
1970	7,300
1971	7,500
1972	7,800
1973	8,200
1974	9,000
1975	9,900
1976	11,100
1977	9,900
1978	11,000

Step 1. The first step in indexing Ms. A's earnings is to find the relationship between the general wage level in Ms. A's indexing year (1977) and the general wage level in each of the years 1951–1976. We refer to appendix I for average wage figures, and perform the following computations:

Year	I. 1977 general wage level	II. Nationwide average of the total wages	III. Column I divided by column II equals relationship
1951	$9,779.44	$2,799.16	3.4937053
1952	9,779.44	2,973.32	3.2890641
1953	9,779.44	3,139.44	3.1150269
1954	9,779.44	3,155.64	3.0990354
1955	9,779.44	3,301.44	2.9621741
1956	9,779.44	3,532.36	2.7685287
1957	9,779.44	3,641.72	2.6853904
1958	9,779.44	3,673.80	2.6619413
1959	9,779.44	3,855.80	2.5362934
1960	9,779.44	4,007.12	2.4405159
1961	9,779.44	4,086.76	2.3929568
1962	9,779.44	4,291.40	2.2788461
1963	9,779.44	4,396.64	2.2242986
1964	9,779.44	4,576.32	2.1369659
1965	9,779.44	4,658.72	2.0991689
1966	9,779.44	4,938.36	1.9803012
1967	9,779.44	5,213.44	1.8758133
1968	9,779.44	5,571.76	1.7551797
1969	9,779.44	5,893.76	1.6592871
1970	9,779.44	6,186.24	1.5808375
1971	9,779.44	6,497.08	1.5052054
1972	9,779.44	7,133.80	1.3708599
1973	9,779.44	7,580.16	1.2901364
1974	9,779.44	8,030.76	1.2177478
1975	9,779.44	8,630.92	1.1330704
1976	9,779.44	9,226.48	1.0599318
1977	9,779.44	9,779.44	1.0000000

Step 2. After we have found these indexing quotients, we multiply Ms. A's actual year-by-year earnings by them to find her indexed earnings, as shown below:

Year	I. Actual earnings	II. Indexing quotient	III. Column I multiplied by column II equals indexed earnings
1951	$3,200	3.4937053	$11,179.86
1952	3,400	3.2890641	11,182.82
1953	3,300	3.1150269	10,279.59
1954	3,600	3.0990354	11,156.53
1955	3,700	2.9621741	10,960.04
1956	3,700	2.7685287	10,243.56
1957	4,000	2.6853904	10,741.56
1958	4,200	2.6619413	11,180.15
1959	4,400	2.5362934	11,159.69
1960	4,500	2.4405159	10,982.32
1961	2,800	2.3929568	6,700.28
1962	2,200	2.2788461	5,013.46
1963	0	2.2242986	0
1964	0	2.1369659	0
1965	3,700	2.0991689	7,766.92
1966	4,500	1.9803012	8,911.36
1967	5,400	1.8758133	10,129.39
1968	6,200	1.7551797	10,882.11
1969	6,900	1.6592871	11,449.08
1970	7,300	1.5808375	11,540.11
1971	7,500	1.5052054	11,289.04
1972	7,800	1.3708599	10,692.71
1973	8,200	1.2901364	10,579.12
1974	9,000	1.2177478	10,959.73
1975	9,900	1.1330704	11,217.40
1976	11,100	1.0599318	11,765.24
1977	9,900	1.0000000	9,900.00
1978	11,000	0	11,000.00

(4) We calculate your indexing year under this paragraph if you, the insured worker, die before reaching age 62, your surviving spouse or surviving divorced spouse is first eligible after 1984, and the indexing year calculated under this paragraph results in a higher widow(er)'s benefit than results from the indexing year calculated under the general rule explained in paragraph (d)(1)(ii). For purposes of this paragraph, the indexing year is never earlier than the second year before the year of your death. Except for this limitation, the indexing year is the earlier of—

(i) The year in which you, the insured worker, attained age 60, or would have attained age 60 if you had lived, and

(ii) The second year before the year in which the surviving spouse or the surviving divorced spouse becomes eligible for widow(er)'s benefits, *i.e.*, has attained age 60, or is age 50–59 and disabled.

(e) *Number of years to be considered in finding your average indexed monthly earnings.* To find the number of years to be used in computing your average indexed monthly earnings—

(1) We count the years beginning with 1951, or (if later) the year you reach age 22, and ending with the earliest of the year before you reach age 62, become disabled, or die. Years wholly or partially within a period of disability (as defined in §404.1501(b) of subpart P of this part) are not counted unless your primary insurance amount would be higher. In that case, we count all the years during the period of disability, even though you had no earnings in some of those years. These are your *elapsed years.* From your elapsed years, we then subtract up to 5 years, the exact number depending on the kind of benefits to which you are entitled. You cannot, under this procedure, have fewer than 2 benefit computation years.

(2) For computing old-age insurance benefits and survivors insurance benefits, we subtract 5 from the number of your elapsed years. See paragraphs (e)(3) and (4) of this section for the dropout as applied to disability benefits. This is the number of your *benefit computation years;* we use the same number of your computation base years (see paragraph (b)(2) of this section) in computing your average indexed monthly earnings. For benefit computation years, we use the years with the highest amounts of earnings after indexing. They may include earnings from years that were not indexed, and must include years of no earnings if you do not have sufficient years with earnings. You cannot have fewer than 2 benefit computation years.

(3) Where the worker is first entitled to disability insurance benefits (DIB) after June 1980, there is an exception to the usual 5 year dropout provision explained in paragraph (e)(2) of this section. (For entitlement before July 1980, we use the usual dropout.) We call this exception the *disability dropout.* We divide the elapsed years by 5 and disregard any fraction. The result, which may not exceed 5, is the number of dropout years. We subtract that number from the number of elapsed years to get the number of benefit computation years, which may not be fewer than 2. After the worker dies, the disability dropout no longer applies and we use the basic 5 dropout years to compute benefits for survivors. We continue to apply the disability dropout when a person becomes entitled to old-

age insurance benefits (OAIB), unless his or her entitlement to DIB ended at least 12 months before he or she became eligible for OAIB. For first DIB entitlement before July 1980, we use the rule in paragraph (e)(2) of this section.

(4) For benefits payable after June 1981, the disability dropout might be increased by the *child care dropout*. If the number of disability dropout years is fewer than 3, we will drop out a benefit computation year for each benefit computation year that the worker meets the child care requirement and had no earnings, until the total of all dropout years is 3. The child care requirement for any year is that the worker must have been living with his or her child (or his or her spouse's child) substantially throughout any part of any calendar year that the child was alive and under age 3. In actual practice, no more than 2 child care years may be dropped, because of the combined effect of the number of elapsed years, 1-for-5 dropout years (if any), and the computation years required for the computation.

Example: Ms. M., born August 4, 1953, became entitled to disability insurance benefits (DIB) beginning in July 1980 based on a disability which began January 15, 1980. In computing the DIB, we determined that the elapsed years are 1975 through 1979, the number of dropout years is 1 (5 elapsed years divided by 5), and the number of computation years is 4. Since Ms. M. had no earnings in 1975 and 1976, we drop out 1975 and use her earnings for the years 1977 through 1979.

Ms. M. lived with her child, who was born in 1972, in all months of 1973 and 1974 and did not have any earnings in those years. We, therefore, recompute Ms. M.'s DIB beginning with July 1981 to give her the advantage of the child care dropout. To do this, we reduce the 4 computation years by 1 child care year to get 3 computation years. Because the child care dropout cannot be applied to computation years in which the worker had earnings, we can drop only one of Ms. M.'s computation years, *i.e.*, 1976, in addition to the year 1975 which we dropped in the initial computation.

(i) *Living with* means that you and the child ordinarily live in the same home and you exercise, or have the right to exercise, parental control. See § 404.366(c) for a further explanation.

(ii) *Substantially throughout any part of any calendar year* means that any period you were not living with the child during a calendar year did not exceed 3 months. If the child was either born or attained age 3 during the calendar year, the period of absence in the year cannot have exceeded the smaller period of 3 months, or one-half the time after the child's birth or before the child attained age 3.

(iii) *Earnings* means wages for services rendered and net earnings from self-employment minus any net loss for a taxable year. See § 404.429 for a further explanation.

(f) *Your average indexed monthly earnings*. After we have indexed your earnings and found your benefit computation years, we compute your average indexed monthly earnings by—

(1) Totalling your indexed earnings in your benefit computation years;

(2) Dividing the total by the number of months in your benefit computation years; and

(3) Rounding the quotient to the next lower whole dollar. if not already a multiple of $1.

Example: From the example in paragraph (d) of this section, we see that Ms. A reaches age 62 in 1979. Her elapsed years are 1951–1978 (28 years). We subtract 5 from her 28 elapsed years to find that we must use 23 benefit computation years. This means that we will use her 23 highest computation base years to find her average indexed monthly earnings. We exclude the 5 years 1961–1965 and total her indexed earnings for the remaining years, *i.e.*, the benefit computation years (including her unindexed earnings in 1977 and 1978) and get $249,381.41. We then divide that amount by the 276 months in her 23 benefit computation years and find her average indexed monthly earnings to be $903.56, which is rounded down to $903.

[47 FR 30734, July 15, 1982; 47 FR 35479, Aug. 13, 1982, as amended at 48 FR 11695, Mar. 21, 1983; 51 FR 4482, Feb. 5, 1986; 57 FR 1381, Jan. 14, 1992]

§ 404.212 Computing your primary insurance amount from your average indexed monthly earnings.

(a) *General*. We compute your primary insurance amount under the average-indexed-monthly-earnings method by applying a *benefit formula* to your average indexed monthly earnings.

(b) *Benefit formula*. (1) We use the applicable benefit formula in appendix II for the year you reach age 62, become disabled, or die whichever occurs first.

If you die before age 62, and your surviving spouse or surviving divorced spouse is first eligible after 1984, we may compute the primary insurance amount, for the purpose of paying benefits to your widow(er), as if you had not died but reached age 62 in the second year after the indexing year that we computed under the provisions of § 404.211(d)(4). We will not use this primary insurance amount for computing benefit amounts for your other survivors or for computing the maximum family benefits payable on your earnings record. Further, we will only use this primary insurance amount if it results in a higher widow(er)'s benefit than would result if we did not use this special computation.

(2) The dollar amounts in the benefit formula are automatically increased each year for persons who attain age 62, or who become disabled or die before age 62 in that year, by the same percentage as the increase in the average of the total wages (see appendix I).

(3) We will publish benefit formulas for years after 1979 in the FEDERAL REGISTER at the same time we publish the average of the total wage figures. We begin to use a new benefit formula as soon as it is applicable, even before we periodically update appendix II.

(4) We may use a modified formula, as explained in § 404.213, if you are entitled to a pension based on your employment which was not covered by Social Security.

(c) *Computing your primary insurance amount from the benefit formula.* We compute your primary insurance amount by applying the benefit formula to your average indexed monthly earnings and adding the results for each step of the formula. For computations using the benefit formulas in effect for 1979 through 1982, we round the total amount to the next higher multiple of $0.10 if it is not a multiple of $0.10 and for computations using the benefit formulas effective for 1983 and later years, we round to the next lower multiple of $0.10. (See paragraph (e) of this section for a discussion of the minimum primary insurance amount.)

(d) *Adjustment of your primary insurance amount when entitlement to benefits occurs in a year after attainment of age 62, disability or death.* If you (or your survivors) do not become entitled to benefits in the same year you reach age 62, become disabled, or die before age 62, we compute your primary insurance amount by—

(1) Computing your average indexed monthly earnings as described in § 404.211;

(2) Applying to your average indexed monthly earnings the benefit formula for the year in which you reach age 62, or become disabled or die before age 62; and

(3) Applying to the primary insurance amount all automatic cost-of-living and *ad hoc* increases in primary insurance amounts that have gone into effect in or after the year you reached age 62, became disabled, or died before age 62. (See § 404.277 for special rules on minimum benefits, and appendix VI for a table of percentage increases in primary insurance amounts since December 1978. Increases in primary insurance amounts are published in the FEDERAL REGISTER and we periodically update appendix VI.)

(e) *Minimum primary insurance amount.* If you were eligible for benefits, or died without having been eligible, before 1982, your primary insurance amount computed under this method cannot be less than $122. This minimum benefit provision has been repealed effective with January 1982 for most workers and their families where the worker initially becomes eligible for benefits in that or a later month, or dies in January 1982 or a later month without having been eligible before January 1982. For members of a religious order who are required to take a vow of poverty, as explained in 20 CFR 404.1024, and which religious order elected Social Security coverage before December 29, 1981, the repeal is effective with January 1992 based on first eligibility or death in that month or later.

[47 FR 30734, July 15, 1982, as amended at 48 FR 46142, Oct. 11, 1983; 51 FR 4482, Feb. 5, 1986; 52 FR 47916, Dec. 17, 1987]

§ 404.213 Computation where you are eligible for a pension based on your noncovered employment.

(a) *When applicable.* Except as provided in paragraph (d) of this section, we will modify the formula prescribed

in § 404.212 and in appendix II of this subpart in the following situations:

(1) You become eligible for old-age insurance benefits after 1985; or

(2) You become eligible for disability insurance benefits after 1985; and

(3) For the same months after 1985 that you are entitled to old-age or disability benefits, you are also entitled to a monthly pension(s) for which you first became eligible after 1985 based in whole or part on your earnings in employment which was not covered under Social Security. We consider you to first become eligible for a monthly pension in the first month for which you met all requirements for the pension except that you were working or had not yet applied. In determining whether you are eligible for a pension before 1986, we consider all applicable service used by the pension-paying agency. (Noncovered employment includes employment outside the United States which is not covered under the United States Social Security system. Pensions from noncovered employment outside the United States include both pensions from social insurance systems that base benefits on earnings but not on residence or citizenship, and those from private employers. However, for benefits payable for months prior to January 1995, we will not modify the computation of a totalization benefit (see §§ 404.1908 and 404.1918) as a result of your entitlement to another pension based on employment covered by a totalization agreement. Beginning January 1995, we will not modify the computation of a totalization benefit in any case (see § 404.213(e)(8)).

(b) *Amount of your monthly pension that we use.* For purposes of computing your primary insurance amount, we consider the amount of your monthly pension(s) (or the amount prorated on a monthly basis) which is attributable to your noncovered work after 1956 that you are entitled to for the first month in which you are concurrently entitled to Social Security benefits. For applications filed before December 1988, we will use the month of earliest concurrent eligibility. In determining the amount of your monthly pension we will use, we will consider the following:

(1) If your pension is not paid on a monthly basis or is paid in a lump-sum, we will allocate it proportionately as if it were paid monthly. We will allocate this the same way we allocate lump-sum payments for a spouse or surviving spouse whose benefits are reduced because of entitlement to a Government pension. (See § 404.408a.)

(2) If your monthly pension is reduced to provide a survivor's benefit, we will use the unreduced amount.

(3) If the monthly pension amount which we will use in computing your primary insurance amount is not a multiple of $0.10, we will round it to the next lower multiple of $0.10.

(c) *How we compute your primary insurance amount.* When you become entitled to old-age or disability insurance benefits and to a monthly pension, we will compute your primary insurance amount under the average-indexed-monthly-earnings method (§ 404.212) as modified by paragraph (c) (1) and (2) of this section. Where applicable, we will also consider the 1977 simplified old-start method (§ 404.241) as modified by § 404.243 and a special minimum primary insurance amount as explained in §§ 404.260 and 404.261. We will use the highest result from these three methods as your primary insurance amount. We compute under the average-indexed-monthly-earnings method, and use the higher primary insurance amount resulting from the application of paragraphs (c) (1) and (2) of this section, as follows:

(1) The formula in appendix II, except that instead of the first percentage figure (*i.e.*, 90 percent), we use—

(i) 80 percent if you initially become eligible for old-age or disability insurance benefits in 1986;

(ii) 70 percent for initial eligibility in 1987;

(iii) 60 percent for initial eligibility in 1988;

(iv) 50 percent for initial eligibility in 1989;

(v) 40 percent for initial eligibility in 1990 and later years, or

(2) The formula in appendix II minus one-half the portion of your monthly pension which is due to noncovered work after 1956 and for which you were entitled in the first month you were

entitled to both Social Security benefits and the monthly pension. If the monthly pension amount is not a multiple of $0.10, we will round to the next lower multiple of $0.10. To determine the portion of your pension which is due to noncovered work after 1956, we consider the total number of years of work used to compute your pension and the percentage of those years which are after 1956, and in which your employment was not covered. We take that percentage of your total pension as the amount which is due to your noncovered work after 1956.

(d) *Alternate computation.* (1) If you have more than 20 but less than 30 years of coverage as defined in the column headed ''Alternate Computation Under §404.213(d)'' in appendix IV of this subpart, we will compute your primary insurance amount using the applicable percentage given below instead of the first percentage in appendix II of this subpart if the applicable percentage below is larger than the percentage specified in paragraph (c) of this section:

(i) For benefits payable for months before January 1989—

Years of coverage	Percent
29	80
28	70
27	60
26	50

(ii) For benefits payable for months after December 1988—

Years of coverage	Percent
29	85
28	80
27	75
26	70
25	65
24	60
23	55
22	50
21	45

(2) If you later earn additional year(s) of coverage, we will recompute your primary insurance amount, effective with January of the following year.

(e) *Exceptions.* The computations in paragraph (c) of this section do not apply in the following situations:

(1) Payments made under the Railroad Retirement Act are not considered to be a pension from noncovered employment for the purposes of this section. See subpart O of this part for a discussion of railroad retirement benefits.

(2) You were entitled before 1986 to disability insurance benefits in any of the 12 months before you reach age 62 or again become disabled. (See §404.251 for the appropriate computation.)

(3) You were a Federal employee performing service on January 1, 1984 to which Social Security coverage was extended on that date solely by reason of the amendments made by section 101 of the Social Security Amendments of 1983.

(4) You were an employee of a nonprofit organization who was exempt from Social Security coverage on December 31, 1983 unless you were previously covered under a waiver certificate which was terminated prior to that date.

(5) You have 30 years of coverage as defined in the column headed ''Alternate Computation Under §404.213(d)'' in appendix IV of this subpart.

(6) Your survivors are entitled to benefits on your record of earnings. (After your death, we will recompute the primary insurance amount to nullify the effect of any monthly pension, based in whole or in part on noncovered employment, to which you had been entitled.)

(7) For benefits payable for months after December 1994, payments by the social security system of a foreign country which are based on a totalization agreement between the United States and that country are not considered to be a pension from noncovered employment for purposes of this section. See subpart T of this part for a discussion of totalization agreements.

(8) For benefits payable for months after December 1994, the computations in paragraph (c) do not apply in the case of an individual whose entitlement to U.S. social security benefits results from a totalization agreement between the United States and a foreign country.

(9) For benefits payable for months after December 1994, you are eligible after 1985 for monthly periodic benefits based wholly on service as a member of a uniformed service, including inactive duty training.

(f) *Entitlement to a totalization benefit and a pension based on noncovered employment.* If, before January 1995, you are entitled to a totalization benefit and to a pension based on noncovered employment that is not covered by a totalization agreement, we count your coverage from a foreign country with which the United States (U.S.) has a totalization agreement and your U.S. coverage to determine if you meet the requirements for the modified computation in paragraph (d) of this section or the exception in paragraph (e)(5) of this section.

(1) Where the amount of your totalization benefit will be determined using a computation method that does not consider foreign earnings (see § 404.1918), we will find your total years of coverage by adding your—

(i) Years of coverage from the agreement country (quarters of coverage credited under § 404.1908 divided by four) and

(ii) Years of U.S. coverage as defined for the purpose of computing the special minimum primary insurance amount under § 404.261.

(2) Where the amount of your totalization benefit will be determined using a computation method that does consider foreign earnings, we will credit your foreign earnings to your U.S. earnings record and then find your total years of coverage using the method described in § 404.261.

[52 FR 47916, Dec. 17, 1987, as amended at 55 FR 21382, May 24, 1990; 57 FR 22429, May 28, 1992; 60 FR 17444, Apr. 6, 1995; 60 FR 56513, Nov. 9, 1995]

AVERAGE-MONTHLY-WAGE METHOD OF COMPUTING PRIMARY INSURANCE AMOUNTS

§ 404.220 Average-monthly-wage method.

(a) *Who is eligible for this method.* You must before 1979, reach age 62, become disabled or die to be eligible for us to compute your primary insurance amount under the average-monthly-wage method. Also, as explained in § 404.230, if you reach age 62 after 1978 but before 1984, you are eligible to have your primary insurance amount computed under a modified average-monthly-wage method if it is to your advantage. Being eligible for either the average-monthly-wage method or the modified average-monthly-wage method does not preclude your eligibility under the *old-start* method described in §§ 404.240 through 404.242.

(b) *Steps in computing your primary insurance amount under the average-monthly-wage method.* We follow these three major steps in computing your primary insurance amount under the average-monthly-wage method:

(1) First, we find your average monthly wage, as described in § 404.221;

(2) Second, we look at the *benefit table* in appendix III; and

(3) Then we find your primary insurance amount in the benefit table, as described in § 404.222.

(4) Finally, we apply any automatic cost-of-living or *ad hoc* increases that became effective in or after the year you reached age 62, or became disabled, or died before age 62, as explained in §§ 404.270 through 404.277.

§ 404.221 Computing your average monthly wage.

(a) *General.* Under the average-monthly-wage method, your social security earnings are averaged over the length of time you can reasonably have been expected to have worked under social security after 1950 (or after you reached age 21, if later).

(b) *Which of your earnings may be used in computing your average monthly wage.* (1) In computing your average monthly wage, we consider all the wages, compensation, self-employment income, and deemed military wage credits that are creditable to you for social security purposes. (The maximum amounts creditable are explained in §§ 404.1047 and 404.1096 of this part.)

(2) We use your earnings in your *computation base years* in computing your average monthly wage. All years after 1950 up to (but not including) the year you become entitled to old-age or disability insurance benefits, or through the year you die if you had not been entitled to old-age or disability benefits, are computation base years for you. Years after the year you die may not be used as computation base years even if you have earnings credited to you in them. However, years beginning with the year you become entitled to

benefits may be used for benefits beginning with the following year if using them would give you a higher primary insurance amount. Years wholly within a period of disability are not computation base years unless your primary insurance amount would be higher if they were. In such situations, we count all the years during the period of disability, even if you had no earnings in some of them.

(c) *Number of years to be considered in computing your average monthly wage.* To find the number of years to be used in computing your average monthly wage—

(1) We count the years beginning with 1951 or (if later) the year you reached age 22 and ending with the year before you reached age 62, or became disabled, or died before age 62. Any part of a year—or years—in which you were disabled, as defined in § 404.1505, is not counted unless doing so would give you a higher average monthly wage. In that case, we count all the years during the period of disability, even if you had no earnings in some of those years. These are your *elapsed years.* (If you are a male and you reached age 62 before 1975, see paragraph (c)(2) of this section for the rules on finding your elapsed years.)

(2) If you are a male and you reached age 62 in—

(i) 1972 or earlier, we count the years beginning with 1951 and ending with the year before you reached age 65, or became disabled or died before age 65 to find your elapsed years;

(ii) 1973, we count the years beginning with 1951 and ending with the year before you reached age 64, or became disabled or died before age 64 to find your elapsed years; or

(iii) 1974, we count the years beginning with 1951 and ending with the year before you reached age 63, became disabled, or died before age 63 to find your elapsed years.

(3) Then we subtract 5 from the number of your elapsed years. This is the number of your *benefit computation years*; we use the same number of your computation base years in computing your average monthly wage. For benefit computation years, we use the years with the highest amounts of earnings, but they may include years of no earnings. You cannot have fewer than 2 benefit computation years.

(d) *Your average monthly wage.* After we find your benefit computation years, we compute your average monthly wage by—

(1) Totalling your creditable earnings in your benefit computation years;

(2) Dividing the total by the number of months in your benefit computation years; and

(3) Rounding the quotient to the next lower whole dollar if not already a multiple of $1.

Example: Mr. B reaches age 62 and becomes entitled to old-age insurance benefits in August 1978. He had no social security earnings before 1951 and his year-by-year social security earnings after 1950 are as follows:

Year	Earnings
1951	$2,700
1952	2,700
1953	3,400
1954	3,100
1955	4,000
1956	4,100
1957	4,000
1958	4,200
1959	4,800
1960	4,800
1961	4,800
1962	4,800
1963	4,800
1964	1,500
1965	0
1966	0
1967	0
1968	3,100
1969	5,200
1970	7,100
1971	7,800
1972	8,600
1973	8,900
1974	9,700
1975	10,100
1976	10,800
1977	11,900

We first find Mr. B's elapsed years, which are the 27 years 1951–1977. We subtract 5 from his 27 elapsed years to find that we must use 22 benefit computation years in computing his average monthly wage. His computation base years are 1951–1977, which are the years after 1950 and prior to the year he became entitled. This means that we will use his 22 computation base years with the highest earnings to compute his average monthly wage. Thus, we exclude the years 1964–1967 and 1951.

We total his earnings in his benefit computation years and get $132,700. We then divide that amount by the 264 months in his 22 benefit computation years and find his average monthly wage to be $502.65, which is rounded down to $502.

(e) *''Deemed'' average monthly wage for certain deceased veterans of World War II.* Certain deceased veterans of World War II are ''deemed'' to have an average monthly wage of $160 (see §§ 404.1340 through 404.1343 of this part) unless their actual average monthly wage, as found in the method described in paragraphs (a) through (d) of this section is higher.

§ 404.222 Use of benefit table in finding your primary insurance amount from your average monthly wage.

(a) *General.* We find your primary insurance amount under the average-monthly-wage method in the benefit table in appendix III.

(b) *Finding your primary insurance amount from benefit table.* We find your average monthly wage in column III of the table. Your primary insurance amount appears on the same line in column IV (column II if you are entitled to benefits for any of the 12 months preceding the effective month in column IV). As explained in § 404.212(e), there is a minimum primary insurance amount of $122 payable for persons who became eligible or died after 1978 and before January 1982. There is also an alternative minimum of $121.80 (before the application of cost-of-living increases) for members of this group whose benefits were computed from the benefit table in effect in December 1978 on the basis of either the old-start computation method in §§ 404.240 through 404.242 or the guaranteed alternative computation method explained in §§ 404.230 through 404.233. However, as can be seen from the extended table in appendix III, the lowest primary insurance amount under this method is now $1.70 for individuals for whom the minimum benefit has been repealed.

Example: In the example in § 404.221(d), we computed Mr. B's average monthly wage to be $502. We refer to the December 1978 benefit table in appendix III. Then we find his average monthly wage in column III of the table. Reading across, his primary insurance amount is on the same line in column IV and is $390.50. A 9.9 percent automatic cost-of-living benefit increase was effective for June 1979, increasing Mr. B's primary insurance amount to $429.20, as explained in §§ 404.270 through 404.277. Then, we increase the $429.20 by the 14.3 percent June 1980 cost-of-living benefit increase and get $490.60, and by the 11.2 percent June 1981 increase to get $545.60.

[47 FR 30734, July 15, 1982, as amended at 48 FR 46142, Oct. 11, 1983]

GUARANTEED ALTERNATIVE FOR PEOPLE REACHING AGE 62 AFTER 1978 BUT BEFORE 1984

§ 404.230 Guaranteed alternative.

(a) *General.* If you reach age 62 after 1978 but before 1984, we compute your primary insurance amount under a modified average-monthly-wage method as a *guaranteed alternative* to your primary insurance amount computed under the average-indexed-monthly-earnings method. We also compute your primary insurance amount under the old-start method (§§ 404.240 through 404.242) and under the special rules for a person who had a period of disability (§§ 404.250 through 404.252), if you are eligible. In §§ 404.231 through 404.233, we explain the average-monthly-wage method as the alternative to the average-indexed-monthly-earnings method.

(b) *Restrictions.* (1) To qualify for this guaranteed-alternative computation, you must have some creditable earnings before 1979.

(2) You or your survivors do not qualify for a guaranteed-alternative computation if you were eligible (you attained age 62, became disabled, or died before age 62) for social security benefits based on your own earnings at any time before 1979 unless—

(i) Those benefits were disability insurance benefits which were terminated because you recovered from your disability or you engaged in substantial gainful activity; and

(ii) You spent at least 12 months without being eligible for disability benefits again.

(3) This guaranteed alternative method applies only to old-age insurance benefits and to survivor benefits where the deceased worker reached the month of his or her 62nd birthday after 1978 but before 1984 and died after reaching age 62.

§ 404.231 Steps in computing your primary insurance amount under the guaranteed alternative—general.

If you reach age 62 after 1978 but before 1984, we follow three major steps in finding your guaranteed alternative:

(a) First, we compute your average monthly wage, as described in § 404.232;

(b) Second, we find the primary insurance amount that corresponds to your average monthly wage in the benefit table in appendix III.

(c) Then we apply any automatic cost-of-living or *ad hoc* increases in primary insurance amounts that have become effective in or after the year you reached age 62.

§ 404.232 Computing your average monthly wage under the guaranteed alternative.

(a) *General*. With the exception described in paragraph (b) of this section, we follow the rules in § 404.221 to compute your average monthly wage.

(b) *Exception*. We do not use any year after the year you reach age 61 as a computation base year in computing your average monthly wage for purposes of the guaranteed alternative.

§ 404.233 Adjustment of your guaranteed alternative when you become entitled after age 62.

(a) If you do not become entitled to benefits at the time you reach age 62, we adjust the guaranteed alternative computed for you under § 404.232 as described in paragraph (b) of this section.

(b) To the primary insurance amount computed under the guaranteed alternative, we apply any automatic cost-of-living or *ad hoc* increases in primary insurance amounts that go into effect in the year you reach age 62 and in years up through the year you become entitled to benefits. (See appendix VI for a list of the percentage increases in primary insurance amounts since December 1978.)

Example: Mr. C reaches age 62 in January 1981 and becomes entitled to old-age insurance benefits in April 1981. He had no social security earnings before 1951 and his year-by-year social security earnings after 1950 are as follows:

Year	Earnings
1951	$3,600
1952	3,600
1953	3,600
1954	3,600
1955	4,200
1956	4,200
1957	4,200
1958	4,200
1959	4,800
1960	4,800
1961	4,800
1962	4,800
1963	4,800
1964	4,800
1965	4,800
1966	6,600
1967	6,600
1968	7,800
1969	7,800
1970	7,800
1971	7,800
1972	9,000
1973	10,800
1974	13,200
1975	14,100
1976	15,300
1977	16,500
1978	17,700
1979	22,900
1980	25,900
1981	29,700

Mr. C's elapsed years are the 30 years 1951 through 1980. We subtract 5 from his 30 elapsed years to find that we must use 25 benefit computation years in computing his average monthly wage. His computation base years are 1951 through 1980 which are years after 1950 up to the year he reached age 62. We will use his 25 computation base years with the highest earnings to compute his average monthly wage. Thus, we exclude the years 1951–1955. The year 1981 is not a base year for this computation.

We total his earnings in his benefit computation years and get $236,000. We then divide by the 300 months in his 25 benefit computation years, and find his average monthly wage to be $786.66 which is rounded down to $786.

The primary insurance amount in the benefit table in appendix III that corresponds to Mr. C's average monthly wage is $521.70. The 9.9 percent and 14.3 percent cost of living increase for 1979 and 1980, respectively, are not applicable because Mr. C reached age 62 in 1981.

The average indexed monthly earnings method described in §§ 404.210 through 404.212 considers all of the earnings after 1950, including 1981 earnings which, in Mr. C's case cannot be used in the guaranteed alternative method. Mr. C's primary insurance amount under the average indexed earnings method is $548.40. Therefore, his benefit is based upon the $548.40 primary insurance amount. As in the guaranteed alternative method, Mr. C is not entitled to the cost of living increases for years before the year he reaches age 62.

OLD-START METHOD OF COMPUTING PRIMARY INSURANCE AMOUNTS

§ 404.240 Old-start method—general.

If you had all or substantially all your social security earnings before 1951, your primary insurance amount computed under the ''1977 simplified old-start'' method may be higher than any other primary insurance amount computed for you under any other method for which you are eligible. As explained in § 404.242, if you reach age 62 after 1978, your primary insurance amount computed under the old-start method is used, for purposes of the guaranteed alternative described in § 404.230, if the old-start primary insurance amount is higher than the one found under the average-monthly-wage method. We may use a modified computation, as explained in § 404.243, if you are entitled to a pension based on your employment which was not covered by Social Security.

[47 FR 30734, July 15, 1982, as amended at 52 FR 47917, Dec. 17, 1987]

§ 404.241 1977 simplified old-start method.

(a) *Who is qualified.* To qualify for the old-start computation, you must meet the conditions in paragraphs (a) (1), (2), or (3) of this section:

(1) You must—

(i) Have one ''quarter of coverage'' (see §§ 404.101 and 404.110 of this part) before 1951;

(ii) Have attained age 21 after 1936 and before 1950, or attained age 22 after 1950 and earned fewer than 6 quarters of coverage after 1950;

(iii) Have not had a period of disability which began before 1951, unless it can be disregarded, as explained in § 404.320 of this part; and,

(iv) Have attained age 62, become disabled, or died, after 1977.

(2)(i) You or your survivor becomes entitled to benefits for June 1992 or later;

(ii) You do not meet the conditions in paragraph (a)(1) of this section, and,

(iii) No person is entitled to benefits on your earnings record in the month before the month you or your survivor becomes entitled to benefits.

(3) A recomputation is first effective for June 1992 or later based on your earnings for 1992 or later.

(b) *Steps in old-start computation.* (1) First, we allocate your earnings during the period 1937–1950 as described in paragraph (c) of this section.

(2) Next, we compute your average monthly wage, as described in paragraph (d) of this section.

(3) Next, we apply the old-start formula to your average monthly wage, as described in paragraph (e)(1) of this section.

(4) Next, we apply certain increments to the amount computed in step (3), as described in paragraph (e)(2) of this section.

(5) Next, we find your primary insurance amount in the benefit table in appendix III, as described in paragraph (f)(1) of this section.

(6) Then, we apply automatic cost-of-living or *ad hoc* increases in primary insurance amounts to the primary insurance amount found in step (5), as described in paragraph (f)(2) of this section.

(c) *Finding your computation base years under the old-start method.* (1) Instead of using your actual year-by-year earnings before 1951, we find your computation base years for 1937–1950 (and the amount of earnings for each of them) by allocating your total 1937–1950 earnings among the years before 1951 under the following procedure:

(i) If you reached age 21 before 1950 and your total 1937–1950 earnings *are not* more than $3,000 times the number of years after the year you reached age 20 and before 1951 (a maximum of 14 years), we allocate your earnings equally among those years, and those years are your computation base years before 1951.

(ii) If you reached age 21 before 1950 and your total 1937–1950 earnings *are* more than $3,000 times the number of years after the year you reached age 20 and before 1951, we allocate your earnings at the rate of $3,000 per year for each year after you reached age 20 and before 1951 up to a maximum of 14 years. We credit any remainder in reverse order to years before age 21 in $3,000 increments and any amount left

over of less than $3,000 to the year before the earliest year to which we credited $3,000. No more than $42,000 may be credited in this way and to no more than 14 years. Those years are your computation base years before 1951.

(iii) If you reached age 21 in 1950 or later and your total pre-1951 earnings are $3,000 or less, we credit the total to the year you reached age 20 and that year is your pre-1951 computation base year.

(iv) If you reached age 21 in 1950 or later and your total pre-1951 earnings are more than $3,000, we credit $3,000 to the year you reached age 20 and credit the remainder to earlier years (or year) in blocks of $3,000 in reverse order. We credit any remainder of less than $3,000 to the year before the earliest year to which we had credited $3,000. No more than $42,000 may be credited in this way and to no more than 14 years. Those years are your computation base years before 1951.

(v) If you die before 1951, we allocate your 1937–1950 earnings under paragraphs (c)(1) (i) through (iv), except that in determining the number of years, we will use the year of death instead of 1951. If you die before you attain age 21, the number of years in the period is equal to 1.

(vi) For purposes of paragraphs (c)(1) (i) through (v), if you had a period of disability which began before 1951, we will exclude the years wholly within a period of disability in determining the number of years.

(2)(i) All years after 1950 up to (but not including) the year you become entitled to old-age insurance or disability insurance benefits (or through the year you die if you had not become entitled to old-age or disability benefits) are also computation base years for you.

(ii) Years wholly within a period of disability are not computation base years unless your primary insurance amount would be higher if they were. In such situations, we count all the years during the period of disability, even if you had no earnings in some of them.

Example: Ms. D reaches age 62 in June 1979. Her total 1937–1950 social security earnings are $40,000 and she had social security earnings of $7,100 in 1976 and $6,300 in 1977. Since she reaches age 62 after 1978, we first compute her primary insurance amount under the average-indexed-monthly-earnings method (§§ 404.210 through 404.212). As of June 1981, it is $170.50, which is the minimum primary insurance amount applicable, because her average indexed monthly earnings of $50 would yield only $56.50 under the benefit formula. Ms. D reached age 62 after 1978 but before 1984 and her guaranteed alternative under the average-monthly-wage method as of June 1981 is $170.30, which is the minimum primary insurance amount based on average monthly wages of $48. (These amounts include the 9.9, the 14.3, and the 11.2 percent cost-of-living increases effective June 1979, June 1980, and June 1981 respectively.)

Ms. D is also eligible for the old-start method. We first allocate $3,000 of her 1937–1950 earnings to each of her 13 computation base years starting with the year she reached age 21 (1938) and ending with 1950. The remaining $1,000 is credited to the year she reached age 20. Ms. D, then, has 42 computation base years (14 before 1951 and 28 after 1950).

(d) *Computing your average monthly wage under the old-start method.* (1) First, we count your elapsed years, which are the years beginning with 1937 (or the year you reach 22, if later) and ending with the year before you reach age 62, or become disabled or die before age 62. (See § 404.211(e)(1) for the rule on how we treat years wholly or partially within a period of disability.)

(2) Next, we subtract 5 from the number of your elapsed years, and this is the number of computation years we must use. We then choose this number of your computation base years in which you had the highest earnings. These years are your benefit computation years. You must have at least 2 benefit computation years.

(3) Then we compute your average monthly wage by dividing your total creditable earnings in your benefit computation years by the number of months in these years and rounding the quotient to the next lower dollar if not already a multiple of $1.

(e) *Old-start computation formula.* We use the following formula to compute your primary insurance benefit, which we will convert to your primary insurance amount:

(1) We take 40 percent of the first $50 of your average monthly wage, plus 10 percent of the next $200 of your average monthly wage up to a total average monthly wage of $250. (We do not use

more than $250 of your average monthly wage.)

(2) We increase the amount found in paragraph (e)(1) of this section by 1 percent for each $1,650 in your pre-1951 earnings, disregarding any remainder less than $1,650. We always increase the amount by at least 4 of these 1 percent increments but may not increase it by more than 14 of them.

(f) *Finding your primary insurance amount under the old-start method.* (1) In column I of the benefit table in appendix III we locate the amount (the primary insurance benefit) computed in paragraph (e) of this section and find the corresponding primary insurance amount on the same line in column IV of the table.

(2) We increase that amount by any automatic cost-of-living or *ad hoc* increases in primary insurance amounts effective since the beginning of the year in which you reached age 62, or became disabled or died before age 62. (See §§ 404.270 through 404.277.)

Example: From the example in paragraph (c)(2) of this section, we see that Ms. D's elapsed years total 40 (number of years at ages 22 to 61, both inclusive). Her benefit computation years, therefore, must total 35. Since she has only 16 years of actual earnings, we must include 19 years of zero earnings in this old-start computation to reach the required 35 benefit computation years.

We next divide her total social security earnings ($53,400) by the 420 months in her benefit computation years and find her average monthly wage to be $127.

We apply the old-start computation formula to Ms. D's average monthly wage as follows: 40 percent of the first $50 of her average monthly wage ($20.00), plus 10 percent of the remaining $77 of her average monthly wage ($7.70), for a total of $27.70.

We then apply 14 1-percent increments to that amount, increasing it by $3.88 to $31.58. We find $31.58 in column I of the December 1978 benefit table in appendix III and find her primary insurance amount of $195.90 on the same line in column IV. We apply the 9.9 percent automatic cost-of-living increase effective for June 1979 to $195.90 and get an old-start primary insurance amount of $215.30 which we then increase to $246.10 to reflect the 14.3 percent cost-of-living increase effective for June 1980, and to $273.70 to reflect the June 1981 increase. Since that primary insurance amount is higher than the $153.10 primary insurance amount computed under the average-monthly-wage method and the $153.30 primary insurance amount computed under the average-indexed-monthly-earnings method, we base Ms. D's benefits (and those of her family) on $215.30 (plus later cost-of-living increases), which is the highest primary insurance amount.

[47 FR 30734, July 15, 1982, as amended at 55 FR 21382, May 24, 1990; 57 FR 23157, June 2, 1992]

§ 404.242 Use of old-start primary insurance amount as guaranteed alternative.

If your primary insurance amount as computed under the old-start method is higher than your primary insurance amount computed under the average-monthly-wage method, your old-start primary insurance amount will serve as the guaranteed alternative to your primary insurance amount computed under the average-indexed-monthly-earnings method, as described in § 404.230. However, earnings that you have in or after the year you reach age 62, or become disabled or die before age 62 are not used in an old-start computation in this situation.

§ 404.243 Computation where you are eligible for a pension based on noncovered employment.

The provisions of § 404.213 are applicable to computations under the old-start method, except for paragraphs (c) (1) and (2) and (d) of that section. Your primary insurance amount will be whichever of the following two amounts is larger:

(a) One-half the primary insurance amount computed according to § 404.241 (before application of the cost of living amount); or

(b) The primary insurance amount computed according to § 404.241 (before application of the cost of living amount), minus one-half the portion of your monthly pension which is due to noncovered work after 1956 and for which you were eligible in the first month you became eligible for Social Security benefits. If the result is not a multiple of $0.10, we will round to the next lower multiple of $0.10. (See § 404.213 (b)(3) if you are not eligible for a monthly pension in the first month you are entitled to Social Security benefits.) To determine the portion of your pension which is due to noncovered work after 1956, we consider the total number of years of work used

to compute your pension and the percentage of those years which are after 1956 and in which your employment was not covered. We take that percentage of your total pension as the amount which is due to your noncovered work after 1956.

[52 FR 47918, Dec. 17, 1987]

SPECIAL COMPUTATION RULES FOR PEOPLE WHO HAD A PERIOD OF DISABILITY

§ 404.250 Special computation rules for people who had a period of disability.

If you were disabled at some time in your life, received disability insurance benefits, and those benefits were terminated because you recovered from your disability or because you engaged in substantial gainful activity, special rules apply in computing your primary insurance amount when you become eligible after 1978 for old-age insurance benefits or if you become re-entitled to disability insurance benefits or die. (For purposes of §§ 404.250 through 404.252, we use the term *second entitlement* to refer to this situation.) There are two sets of rules:

(a) *Second entitlement within 12 months.* If 12 months or fewer pass between the last month for which you received a disability insurance benefit and your second entitlement, see the rules in § 404.251; and

(b) *Second entitlement after more than 12 months.* If more than 12 months pass between the last month for which you received a disability insurance benefit and your second entitlement, see the rules in § 404.252.

§ 404.251 Subsequent entitlement to benefits less than 12 months after entitlement to disability benefits ended.

(a) *Disability before 1979; second entitlement after 1978.* In this situation, we compute your second-entitlement primary insurance amount by selecting the highest of the following:

(1) The primary insurance amount to which you were entitled when you last received a benefit, increased by any automatic cost-of-living or *ad hoc* increases in primary insurance amounts that took effect since then;

(2) The primary insurance amount resulting from a recomputation of your primary insurance amount, if one is possible; or

(3) The primary insurance amount computed for you as of the time of your second entitlement under any method for which you are qualified at that time, including the average-indexed-monthly-earnings method if the previous period of disability is disregarded.

(b) *Disability and second entitlement after 1978.* In this situation, we compute your second-entitlement primary insurance amount by selecting the highest of the following:

(1) The primary insurance amount to which you were entitled when you last received a benefit, increased by any automatic cost-of-living or *ad hoc* increases in primary insurance amount that took effect since then;

(2) The primary insurance amount resulting from a recomputation of your primary insurance amount, if one is possible (this recomputation may be under the average-indexed-monthly-earnings method only); or

(3) The primary insurance amount computed for you as of the time of your second entitlement under any method (including an old-start method) for which you are qualifed at that time.

(c) *Disability before 1986; second entitlement after 1985.* When applying the rule in paragraph (b)(3) of this section, we must consider your receipt of a monthly pension based on noncovered employment. (See § 404.213). However, we will disregard your monthly pension if you were previously entitled to disability benefits before 1986 and in any of the 12 months before your second entitlement.

[47 FR 30734, July 15, 1982, as amended at 52 FR 47918, Dec. 17, 1987]

§ 404.252 Subsequent entitlement to benefits 12 months or more after entitlement to disability benefits ended.

In this situation, we compute your second-entitlement primary insurance amount by selecting the higher of the following:

(a) *New primary insurance amount.* The primary insurance amount computed

as of the time of your second entitlement under any of the computation methods for which you qualify at the time of your second entitlement; or

(b) *Previous primary insurance amount.* The primary insurance amount to which you were entitled in the last month for which you were entitled to a disability insurance benefit.

SPECIAL MINIMUM PRIMARY INSURANCE AMOUNTS

§ 404.260 Special minimum primary insurance amounts.

Regardless of the method we use to compute your primary insurance amount, if the special minimum primary insurance amount described in § 404.261 is higher, then your benefits (and those of your dependents or survivors) will be based on the special minimum primary insurance amount. Special minimum primary insurance amounts are not based on a worker's average earnings, as are primary insurance amounts computed under other methods. Rather, the special minimum primary insurance amount is designed to provide higher benefits to people who worked for long periods in low-paid jobs covered by social security.

§ 404.261 Computing your special minimum primary insurance amount.

(a) *Years of coverage.* (1) The first step in computing your special minimum primary insurance amount is to find the number of your years of coverage, which is the sum of—

(i) The quotient found by dividing your total creditable social security earnings during the period 1937–1950 by $900, disregarding any fractional remainder; plus

(ii) The number of your computation base years after 1950 in which your social security earnings were at least the amounts shown in appendix IV. (*Computation base years* mean the same here as in other computation methods discussed in this subpart.)

(2) You must have at least 11 years of coverage to qualify for a special minimum primary insurance amount computation. However, special minimum primary insurance amounts based on little more than 10 years of coverage are usually lower than the regular minimum benefit that was in effect before 1982 (see §§ 404.212(e) and 404.222(b) of this part). In any situation where your primary insurance amount computed under another method is higher, we use that higher amount.

(b) *Computing your special minimum primary insurance amount.* (1) First, we subtract 10 from your years of coverage and multiply the remainder (at least 1 and no more than 20) by $11.50;

(2) Then we increase the amount found in paragraph (b)(1) of this section by any automatic cost-of-living or *ad hoc* increases that have become effective since December 1978 to find your special minimum primary insurance amount. See appendix V for the applicable table, which includes the 9.9 percent cost-of-living increase that became effective June 1979, the 14.3 percent increase that became effective June 1980, and the 11.2 percent increase that became effective June 1981.

Example: Ms. F, who attained age 62 in January 1979, had $10,000 in total social security earnings before 1951 and her post-1950 earnings are as follows:

Year	Earnings
1951	$1,100
1952	950
1953	0
1954	1,000
1955	1,100
1956	1,200
1957	0
1958	1,300
1959	0
1960	1,300
1961	0
1962	1,400
1963	1,300
1964	0
1965	500
1966	700
1967	650
1968	900
1969	1,950
1970	2,100
1971	2,000
1972	1,500
1973	2,700
1974	2,100
1975	2,600
1976	3,850
1977	4,150
1978	0

Her primary insurance amount under the average-indexed-monthly-earnings method as of June 1981 is $240.40 (based on average indexed monthly earnings of $229). Her guaranteed-alternative primary insurance amount under the average-monthly-wage method as

of June 1981 is $255.80 (based on average monthly wages of $131).

However, Ms. F has enough earnings before 1951 to allow her 11 years of coverage before 1951 ($10,000÷$900=11, plus a remainder, which we drop). She has sufficient earnings in 1951–52, 1954–56, 1958, 1960, 1962–63, 1969–71, 1973, and 1976–77 to have a year of coverage for each of those years. She thus has 15 years of coverage after 1950 and a total of 26 years of coverage. We subtract 10 from her years of coverage, multiply the remainder (16) by $11.50 and get $184.00. We then apply the June 1979, June 1980, and June 1981 automatic cost-of-living increases (9.9 percent, 14.3 percent, and 11.2 percent, respectively) to that amount to find her special minimum primary insurance amount of $202.30 effective June 1979, $231.30 effective June 1980, and $257.30 effective June 1981. (See appendices V and VI.) Since her special minimum primary insurance amount is higher than the primary insurance amounts computed for her under the other methods described in this subpart for which she is eligible, her benefits (and those of her family) are based on the special minimum primary insurance amount.

[47 FR 30734, July 15, 1982, as amended at 48 FR 46143, Oct. 11, 1983]

COST-OF-LIVING INCREASES

§ 404.270 Cost-of-living increases.

Your primary insurance amount may be automatically increased each December so it keeps up with rises in the cost of living. These automatic increases also apply to other benefit amounts, as described in § 404.271.

[47 FR 30734, July 15, 1982, as amended at 51 FR 12603, Apr. 14, 1986]

§ 404.271 When automatic cost-of-living increases apply.

Besides increases in the primary insurance amounts of current beneficiaries, automatic cost-of-living increases also apply to—

(a) The benefits of certain uninsured people age 72 and older (see § 404.380);

(b) The special minimum primary insurance amounts (described in §§ 404.260 through 404.261) of current and future beneficiaries;

(c) The primary insurance amounts of people who after 1978 become eligible for benefits or die before becoming eligible (beginning with December of the year they become eligible or die), although certain limitations are placed on the automatic adjustment of the frozen minimum primary insurance amount (as described in § 404.277); and

(d) The *maximum family benefit amounts* in column V of the benefit table in appendix III.

[47 FR 30734, July 15, 1982, as amended at 51 FR 12603, Apr. 14, 1986]

§ 404.272 Indexes we use to measure the rise in the cost-of-living.

(a) *The bases*. To measure increases in the cost-of-living for annual automatic increase purposes, we use either:

(1) The revised Consumer Price Index (CPI) for urban wage earners and clerical workers as published by the Department of Labor, or

(2) The average wage index (AWI), which is the average of the annual total wages that we use to index (*i.e.*, update) a worker's past earnings when we compute his or her primary insurance amount (§ 404.211(c)).

(b) *Effect of the OASDI fund ratio*. Which of these indexes we use to measure increases in the cost-of-living depends on the Old-Age, Survivors, and Disability Insurance (OASDI) fund ratio.

(c) *OASDI fund ratio for years after 1984*. For purposes of cost-of-living increases, the OASDI fund ratio is the ratio of the combined assets in the Federal Old-Age and Survivors Insurance Trust Fund and the Federal Disability Insurance Trust Fund (see section 201 of the Social Security Act) on January 1 of a given year, to the estimated expenditures from the Funds in the same year. The January 1 balance consists of the assets (*i.e.*, government bonds and cash) in the Federal Old-Age and Survivors Insurance Trust Fund and the Federal Disability Insurance Trust Fund, plus Federal Insurance Contributions Act (FICA) and Self-Employment Contributions Act (SECA) taxes transferred to these trust funds on January 1 of the given year, minus the outstanding amounts (principal and interest) owed to the Federal Hospital Insurance Trust Fund as a result of interfund loans. Estimated expenditures are amounts we expect to pay from the Old-Age and Survivors Insurance and the Disability Insurance Trust Funds during the year, including the net amount that we pay into the

Railroad Retirement Account, but excluding principal repayments and interest payments to the Hospital Insurance Trust Fund and transfer payments between the Old-Age and Survivors Insurance and the Disability Insurance Trust Funds. The ratio as calculated under this rule is rounded to the nearest 0.1 percent.

(d) *Which index we use.* We use the CPI if the OASDI fund ratio is 15.0 percent or more for any year from 1984 through 1988, and if the ratio is 20.0 percent or more for any year after 1988. We use either the CPI or the AWI, depending on which has the lower percentage increase in the applicable measuring period (see § 404.274), if the OASDI fund ratio is less than 15.0 percent for any year from 1984 through 1988, and if the ratio is less than 20.0 percent for any year after 1988. For example, if the OASDI fund ratio for a year is 17.0 percent, the cost-of-living increase effective December of that year will be based on the CPI.

[51 FR 12603, Apr. 14, 1986]

§ 404.273 When are automatic cost-of-living increases effective?

We make automatic cost-of-living increases if the applicable index, either the CPI or the AWI, rises over a specified measuring period (*see* the rules on measuring periods in § 404.274). If the cost-of-living increase is to be based on an increase in the CPI, the increase is effective in December of the year in which the measuring period ends. If the increase is to be based on an increase in the AWI, the increase is effective in December of the year after the year in which the measuring period ends.

[69 FR 19925, Apr. 15, 2004]

§ 404.274 What are the measuring periods we use to calculate cost-of-living increases?

(a) *General.* Depending on the OASDI fund ratio, we measure the rise in one index or in both indexes during the applicable measuring period (described in paragraphs (b) and (c) of this section) to determine whether there will be an automatic cost-of-living increase and if so, its amount.

(b) *Measuring period based on the CPI*—(1) *When the period begins.* The measuring period we use for finding the amount of the CPI increase begins with the later of—

(i) Any calendar quarter in which an *ad hoc* benefit increase is effective; or

(ii) The third calendar quarter of any year in which the last automatic increase became effective.

(2) *When the period ends.* The measuring period ends with the third calendar quarter of the following year. If this measuring period ends in a year after the year in which an ad hoc increase was enacted or took effect, there can be no cost-of-living increase at that time. We will extend the measuring period to the third calendar quarter of the next year.

(c) *Measuring period based on the AWI*—(1) *When the period begins.* The measuring period we use for finding the amount of the AWI increase begins with the later of—

(i) The calendar year before the year in which an *ad hoc* benefit increase is effective; or

(ii) The calendar year before the year in which the last automatic increase became effective.

(2) *When the period ends.* The measuring period ends with the following year. If this measuring period ends in a year in which an *ad hoc* increase was enacted or took effect, there can be no cost-of-living increase at that time. We will extend the measuring period to the next calendar year.

[69 FR 19925, Apr. 15, 2004]

§ 404.275 How is an automatic cost-of-living increase calculated?

(a) *Increase based on the CPI.* We compute the average of the CPI for the quarters that begin and end the measuring period by adding the three monthly CPI figures, dividing the total by three, and rounding the result to the same number of decimal places as the published CPI figures. If the number of decimal places in the published CPI values differs between those used for the beginning and ending quarters, we use the number for the ending quarter. If the average for the ending quarter is higher than the average for the

beginning quarter, we divide the average for the ending quarter by the average of the beginning quarter to determine the percentage increase in the CPI over the measuring period.

(b) *Increase based on the AWI.* If the AWI for the year that ends the measuring period is higher than the AWI for the year which begins the measuring period and all the other conditions for an AWI-based increase are met, we divide the higher AWI by the lower AWI to determine the percentage increase in the AWI.

(c) *Rounding rules.* We round the increase from the applicable paragraph (a) or (b) of this section to the nearest 0.1 percent by rounding 0.05 percent and above to the next higher 0.1 percent and otherwise rounding to the next lower 0.1 percent. For example, if the applicable index is the CPI and the increase in the CPI is 3.15 percent, we round the increase to 3.2 percent. We then apply this percentage increase to the amounts described in § 404.271 and round the resulting dollar amounts to the next lower multiple of $0.10 (if not already a multiple of $0.10).

(d) *Additional increase. See* § 404.278 for the additional increase that is possible.

[69 FR 19925, Apr. 15, 2004, as amended at 72 FR 2186, Jan. 18, 2007]

§ 404.276 Publication of notice of increase.

When we determine that an automatic cost-of-living increase is due, we publish in the FEDERAL REGISTER within 45 days of the end of the measuring period used in finding the amount of the increase—

(a) The fact that an increase is due;

(b) The amount of the increase;

(c) The increased special minimum primary insurance amounts; and

(d) The range of increased maximum family benefits that corresponds to the range of increased special minimum primary insurance amounts.

§ 404.277 When does the frozen minimum primary insurance amount increase because of cost-of-living adjustments?

(a) *What is the frozen minimum primary insurance amount (PIA)?* The frozen minimum is a minimum PIA for certain workers whose benefits are computed under the average-indexed-monthly-earnings method. Section 404.210(a) with § 404.212(e) explains when the frozen minimum applies.

(b) *When does the frozen minimum primary insurance amount (PIA) increase automatically?* The frozen minimum PIA increases automatically in every year in which you or your dependents or survivors are entitled to benefits and a cost-of-living increase applies.

(c) *When are automatic increases effective for old-age or disability benefits based on a frozen minimum primary insurance amount (PIA)?* Automatic cost-of-living increases apply to your frozen minimum PIA beginning with the earliest of:

(1) December of the year you become entitled to benefits and receive at least a partial benefit;

(2) December of the year you reach full retirement age (as defined in § 404.409) if you are entitled to benefits in or before the month you attain full retirement age, regardless of whether you receive at least a partial benefit; or

(3) December of the year you become entitled to benefits if that is after you attain full retirement age.

(d) *When are automatic increases effective for survivor benefits based on a frozen minimum primary insurance amount (PIA)?* (1) Automatic cost-of-living increases apply to the frozen minimum PIA used to determine survivor benefits in December of any year in which your child(ren), your surviving spouse caring for your child(ren), or your parent(s), are entitled to survivor benefits for at least one month.

(2) Automatic cost-of-living increases apply beginning with December of the earlier of:

(i) The year in which your surviving spouse or surviving divorced spouse (as defined in §§ 404.335 and 404.336) has attained full retirement age (as defined in § 404.409) and receives at least a partial benefit, or

(ii) The year in which your surviving spouse or surviving disabled spouse becomes entitled to benefits and receives at least a partial benefit.

(3) Automatic cost-of-living increases are not applied to the frozen minimum PIA in any year in which no survivor of

yours is entitled to benefits on your social security record.

[68 FR 4702, Jan. 30, 2003]

§ 404.278 Additional cost-of-living increase.

(a) *General*. In addition to the cost-of-living increase explained in § 404.275 for a given year, we will further increase the amounts in § 404.271 if—

(1) The OASDI fund ratio is more than 32.0 percent in the given year in which a cost-of-living increase is due; and

(2) In any prior year, the cost-of-living increase was based on the AWI as the lower of the CPI and AWI.

(b) *Measuring period for the additional increase*—(1) *Beginning*. To compute the additional increase, we begin with—

(i) In the case of certain uninsured beneficiaries age 72 and older (see § 404.380), the first calendar year in which a cost-of-living adjustment was based on the AWI rather than the CPI;

(ii) For all other individuals and for maximum benefits payable to a family, the year in which the insured individual became eligible for old-age or disability benefits to which he or she is currently entitled, or died before becoming eligible.

(2) *Ending*. The end of the measuring period is the year before the first year in which a cost-of-living increase is due based on the CPI and in which the OASDI fund ratio is more than 32.0 percent.

(c) *Compounded percentage benefit increase*. To compute the additional cost-of-living increase, we must first compute the compounded percentage benefit increase (CPBI) for both the cost-of-living increases that were actually paid during the measuring period and for the increases that would have been paid if the CPI had been the basis for all the increases.

(d) *Computing the CPBI*. The computation of the CPBI is as follows—

(1) Obtain the sum of (i) 1.000 and (ii) the actual cost-of-living increase percentage (expressed as a decimal) for each year in the measuring period;

(2) Multiply the resulting amount for the first year by that for the second year, then multiply that product by the amount for the third year, and continue until the last amount has been multiplied by the product of the preceding amounts;

(3) Subtract 1 from the last product;

(4) Multiply the remaining product by 100. The result is what we call the *actual* CPBI.

(5) Substitute the cost-of-living increase percentage(s) that would have been used if the increase(s) had been based on the CPI (for some years, this will be the percentage that was used), and do the same computations as in paragraphs (d) (1) through (4) of this section. The result is what we call the *assumed* CPBI.

(e) *Computing the additional cost-of-living increase*. To compute the precentage increase, we—

(1) Subtract the actual CPBI from the assumed CPBI;

(2) Add 100 to the actual CPBI;

(3) Divide the answer from paragraph (e)(1) of this section by the answer from paragraph (e)(2) of this section, multiply the quotient by 100, and round to the nearest 0.1. The result is the additional increase percentage, which we apply to the appropriate amount described in § 404.271 after that amount has been increased under § 404.275 for a given year. If that increased amount is not a multiple of $0.10, we will decrease it to the next lower multiple of $0.10.

(f) *Restrictions on paying an additional cost-of-living increase*. We will pay the additional increase to the extent necessary to bring the benefits up to the level they would have been if they had been increased based on the CPI. However, we will pay the additional increase only to the extent payment will not cause the OASDI fund ratio to drop below 32.0 percent for the year after the year in which the increase is effective.

[51 FR 12604, Apr. 21, 1986, as amended at 69 FR 19925, Apr. 15, 2004]

RECOMPUTING YOUR PRIMARY INSURANCE AMOUNT

§ 404.280 Recomputations.

At times after you or your survivors become entitled to benefits, we will recompute your primary insurance amount. Usually we will recompute only if doing so will increase your primary insurance amount. However, we

will also recompute your primary insurance amount if you first became eligible for old-age or disability insurance benefits after 1985, and later become entitled to a pension based on your noncovered employment, as explained in § 404.213. There is no limit on the number of times your primary insurance amount may be recomputed, and we do most recomputations automatically. In the following sections, we explain:

(a) Why a recomputation is made (§ 404.281),

(b) When a recomputation takes effect (§ 404.282),

(c) Methods of recomputing (§§ 404.283 and 404.284),

(d) Automatic recomputations (§ 404.285),

(e) Requesting a recomputation (§ 404.286),

(f) Waiving a recomputation (§ 404.287), and

(g) Recomputing when you are entitled to a pension based on noncovered employment (§ 404.288).

[52 FR 47918, Dec. 17, 1987]

§ 404.281 Why your primary insurance amount may be recomputed.

(a) *Earnings not included in earlier computation or recomputation.* The most common reason for recomputing your primary insurance amount is to include earnings of yours that were not used in the first computation or in an earlier recomputation, as described in paragraphs (c) through (e) of this section. These earnings will result in a revised average monthly wage or revised average indexed monthly earnings.

(b) *New computation method enacted.* If a new method of computing or recomputing primary insurance amounts is enacted into law and you are eligible to have your primary insurance amount recomputed under the new method, we will recompute it under the new method if doing so would increase your primary insurance amount.

(c) *Earnings in the year you reach age 62 or become disabled.* In the initial computation of your primary insurance amount, we do not use your earnings in the year you become entitled to old-age insurance benefits or become disabled. However, we can use those earnings (called *lag earnings*) in a recomputation of your primary insurance amount. We recompute and begin paying you the higher benefits in the year after the year you become entitled to old-age benefits or become disabled.

(d) *Earnings not reported to us in time to use them in the computation of your primary insurance amount.* Because of the way reports of earnings are required to be submitted to us for years after 1977, the earnings you have in the year before you become entitled to old-age insurance benefits, or become disabled or in the year you die might not be reported to us in time to use them in computing your primary insurance amount. We recompute your primary insurance amount based on the new earnings information and begin paying you (or your survivors) the higher benefits based on the additional earnings, beginning with the month you became entitled or died.

(e) *Earnings after entitlement that are used in a recomputation.* Earnings that you have after you become entitled to benefits will be used in a recomputation of your primary insurance amount.

(f) *Entitlement to a monthly pension.* We will recompute your primary insurance amount if in a month after you became entitled to old-age or disability insurance benefits, you become entitled to a pension based on noncovered employment, as explained in § 404.213. Further, we will recompute your primary insurance amount after your death to disregard a monthly pension based on noncovered employment which affected your primary insurance amount.

[47 FR 30734, July 15, 1982, as amended at 52 FR 47918, Dec. 17, 1987]

§ 404.282 Effective date of recomputations.

Most recomputations are effective beginning with January of the calendar year after the year in which the additional earnings used in the recomputation were paid. However, a recomputation to include earnings in the year of death (whether or not paid before death) is effective for the month of death. Additionally if you first became eligible for old-age or disability insurance benefits after 1985 and you later

also become entitled to a monthly pension based on noncovered employment, we will recompute your primary insurance amount under the rules in § 404.213; this recomputed Social Security benefit amount is effective for the first month you are entitled to the pension. Finally, if your primary insurance amount was affected by your entitlement to a pension, we will recompute the amount to disregard the pension, effective with the month of your death.

[47 FR 30734, July 15, 1982, as amended at 52 FR 47918, Dec. 17, 1987]

§ 404.283 Recomputation under method other than that used to find your primary insurance amount.

In some cases, we may recompute your primary insurance amount under a computation method different from the method used in the computation (or earlier recomputation) of your primary insurance amount, if you are eligible for a computation or recomputation under the different method.

§ 404.284 Recomputations for people who reach age 62, or become disabled, or die before age 62 after 1978.

(a) *General.* Years of your earnings after 1978 not used in the computation of your primary insurance amount (or in earlier recomputations) under the average-indexed-monthly-earnings method may be substituted for earlier years of your indexed earnings in a recomputation, but only under the average-indexed-monthly-earnings method. See § 404.288 for the rules on recomputing when you are entitled to a monthly pension based on noncovered employment.

(b) *Substituting actual dollar amounts in earnings for earlier years of indexed earnings.* When we recompute your primary insurance amount under the average-indexed-monthly earnings method, we use actual dollar amounts, *i.e.*, no indexing, for earnings not included in the initial computation or earlier recomputation. These later earnings are substituted for earlier years of indexed or actual earnings that are lower.

(c) *Benefit formula used in recomputation.* The formula that was used in the first computation of your primary insurance amount is also used in recomputations of your primary insurance amount.

(d) *Your recomputed primary insurance amount.* We recompute your primary insurance amount by applying the benefit formula to your average indexed monthly earnings as revised to include additional earnings. See § 404.281. We then increase the recomputed PIA by the amounts of any automatic cost-of-living or *ad hoc* increases in primary insurance amounts that have become effective since you reached age 62, or became disabled or died before age 62.

(e) *Minimum increase in primary insurance amounts.* Your primary insurance amount may not be recomputed unless doing so would increase it by at least $1.

Example 1. Ms. A, whose primary insurance amount we computed to be $432.40 in June 1979 in §§ 404.210 through 404.212 (based on average indexed monthly earnings of $903), had earnings of $11,000 in 1979 which were not used in the initial computation of her primary insurance amount. We may recompute her primary insurance amount effective for January 1980. In this recomputation, her 1979 earnings may be substituted in their actual dollar amount for the lowest year of her indexed earnings that was used in the initial computation. In Ms. A's case, we substitute the $11,000 for her 1966 indexed earnings of $8,911.36. Her total indexed earnings are now $251,470.05 and her new average indexed monthly earnings are $911. We apply to Ms. A's new average indexed monthly earnings the same benefit formula we used in the initial computation. Doing so produces an amount of $396.00. An automatic cost-of-living increase of 9.9 percent was effective in June 1979. We increase the $396.00 amount by 9.9 percent to find Ms. A's recomputed primary insurance amount of $435.30. Later we increased the primary insurance amount to $497.60 to reflect the 14.3 percent cost-of-living increase beginning June 1980 and to $553.40 to reflect the 11.2 percent cost-of-living increase beginning June 1981.

Example 2. Mr. B, whose primary insurance amount we computed to be $429.20 (based on average monthly wages of $502) in June 1978 in §§ 404.220 through 404.222, had earnings of $12,000 in 1978 which were not used in the initial computation of his primary insurance amount. We may recompute his primary insurance amount effective for January 1979. In this recomputation, his 1978 earnings are substituted for the lowest year of earnings used in the initial computation ($2,700 in

1952). Mr. B's total earnings are now $142,000 and his new average monthly wage is $537.

We next find Mr. B's new average monthly wage in column III of the December 1978 benefit table in appendix III. Reading across, we find his recomputed primary insurance amount on the same line in column IV, which is $407.70. We then apply the 9.9 percent, the 14.3 percent and the 11.2 percent automatic cost-of-living increases for June 1979, June 1980, and June 1981, respectively, to compute Mr. B's primary insurance amount of $569.60.

(f) *Guaranteed alternatives.* We may recompute your primary insurance amount by any of the following methods for which you qualify, if doing so would result in a higher amount than the one computed under the average-indexed-monthly-earnings method. Earnings in or after the year you reach age 62 cannot be used.

(1) If you reached age 62 after 1978 and before 1984, we may recompute to include earnings for years before the year you reached age 62 by using the guaranteed alternative (§ 404.231). We will increase the result by any cost-of-living or *ad hoc* increases in the primary insurance amounts that have become effective in and after the year you reached age 62.

(2) We will also recompute under the old-start guarantee (§ 404.242) and the prior-disability guarantee (§ 404.252) if you meet the requirements of either or both these methods.

[47 FR 30734, July 15, 1982, as amended at 52 FR 47918, Dec. 17, 1987]

§ 404.285 Recomputations performed automatically.

Each year, we examine the earnings record of every retired, disabled, and deceased worker to see if the worker's primary insurance amount may be recomputed under any of the methods we have described. When a recomputation is called for, we perform it automatically and begin paying the higher benefits based on your recomputed primary insurance amount for the earliest possible month that the recomputation can be effective. You do not have to request this service, although you may request a recomputation at an earlier date than one would otherwise be performed (see § 404.286). Doing so, however, does not allow your increased primary insurance amount to be effective any sooner than it would be under an automatic recomputation. You may also waive a recomputation if one would disadvantage you or your family (see § 404.287).

§ 404.286 How to request an immediate recomputation.

You may request that your primary insurance amount be recomputed sooner than it would be recomputed automatically. To do so, you must make the request in writing to us and provide acceptable evidence of your earnings not included in the first computation or earlier recomputation of your primary insurance amount. If doing so will increase your primary insurance amount, we will recompute it. However, we cannot begin paying higher benefits on the recomputed primary insurance amount any sooner than we could under an automatic recomputation, *i.e.*, for January of the year following the year in which the earnings were paid or derived.

§ 404.287 Waiver of recomputation.

If you or your family would be disadvantaged in some way by a recomputation of your primary insurance amount, or you and every member of your family do not want your primary insurance amount to be recomputed for any other reason, you may waive (that is, give up your right to) a recomputation, but you must do so in writing. That you waive one recomputation, however, does not mean that you also waive future recomputations for which you might be eligible.

§ 404.288 Recomputing when you are entitled to a monthly pension based on noncovered employment.

(a) *After entitlement to old-age or disability insurance benefits.* If you first become eligible for old-age or disability insurance benefits after 1985 and you later become entitled to a monthly pension based on noncovered employment, we may recompute your primary insurance amount under the rules in § 404.213. When recomputing, we will use the amount of the pension to which you are entitled or deemed entitled in the first month that you are concurrently eligible for both the pension and

old-age or disability insurance benefits. We will disregard the rule in § 404.284(e) that the recomputation must increase your primary insurance amount by at least $1.

(b) *Already entitled to benefits and to a pension based on noncovered employment.* If we have already computed or recomputed your primary insurance amount to take into account your monthly pension, we may later recompute for one of the reasons explained in § 404.281. We will recompute your primary insurance amount under the rules in §§ 404.213 and 404.284. Any increase resulting from the recomputation under the rules of § 404.284 will be added to the most recent primary insurance amount which we had computed to take into account your monthly pension.

(c) *After your death.* If one or more survivors are entitled to benefits after your death, we will recompute the primary insurance amount as though it had never been affected by your entitlement to a monthly pension based in whole or in part on noncovered employment.

[52 FR 47918, Dec. 17, 1987]

RECALCULATIONS OF PRIMARY INSURANCE AMOUNTS

§ 404.290 Recalculations.

(a) Your primary insurance amount may be ''recalculated'' in certain instances. When we recalculate your primary amount, we refigure it under the same method we used in the first computation by taking into account—

(1) Earnings (including compensation for railroad service) incorrectly included or excluded in the first computation;

(2) Special deemed earnings credits including credits for military service (see subpart N of this part) and for individuals interned during World War II (see subpart K of this part), not available at the time of the first computation;

(3) Correction of clerical or mathematical errors; or

(4) Other miscellaneous changes in status.

(b) Unlike recomputations, which may only serve to increase your primary insurance amount, recalculations may serve to either increase or reduce it.

APPENDIXES TO SUBPART C OF PART 404—NOTE

The following appendices contain data that are needed in computing primary insurance amounts. Appendix I contains *average of the total wages* figures, which we use to *index* a worker's earnings for purposes of computing his or her average indexed monthly earnings. Appendix II contains benefit formulas which we apply to a worker's average indexed monthly earnings to find his or her primary insurance amount. Appendix III contains the benefit table we use to find a worker's primary insurance amount from his or her average monthly wage. We use the figures in appendix IV to find your years of coverage for years after 1950 for purposes of your special minimum primary insurance amount. Appendix V contains the table for computing the special minimum primary insurance amount. Appendix VI is a table of the percentage increases in primary insurance amounts since 1978. Appendix VII is a table of the *old-law* contribution and benefit base that would have been effective under the Social Security Act without enactment of the 1977 amendments.

The figures in the appendices are by law automatically adjusted each year. We are required to announce the changes through timely publication in the FEDERAL REGISTER. The only exception to the requirement of publication in the FEDERAL REGISTER is the update of benefit amounts shown in appendix III. We update the benefit amounts for payment purposes but are not required by law to publish this extensive table in the FEDERAL REGISTER. We have not updated the table in appendix III, but the introductory paragraphs at appendix III explain how you can compute the current benefit amount.

When we publish the figures in the FEDERAL REGISTER, we do not change every one of these figures. Instead, we provide new ones for each year that passes. We continue to use the old ones for various computation purposes, as the regulations show. Most of the new figures for these appendices are required by law to be published by November 1 of each year. Notice of automatic cost-of-living increases in primary insurance amounts is required to be published within 45 days of the end of the applicable measuring period for the increase (see §§ 404.274 and 404.276). In effect, publication is required within 45 days of the end of the third calendar quarter of any year in which there is to be an automatic cost-of-living increase.

We begin to use the new data in computing primary insurance amounts as soon as required by law, even before we periodically update these appendices. If the data you need to find your primary insurance amount have

not yet been included in the appendices, you may find the figures in the FEDERAL REGISTER on or about November 1.

[52 FR 8247, Mar. 17, 1987]

APPENDIX I TO SUBPART C OF PART 404—AVERAGE OF THE TOTAL WAGES FOR YEARS AFTER 1950

Explanation: We use these figures to index your social security earnings (as described in § 404.211) for purposes of computing your average indexed monthly earnings.

Calendar year	Average of the total wages
1951	$2,799.16
1952	2,973.32
1953	3,139.44
1954	3,155.64
1955	3,301.44
1956	3,532.36
1957	3,641.72
1958	3,673.80
1959	3,855.80
1960	4,007.12
1961	4,086.76
1962	4,291.40
1963	4,396.64
1964	4,576.32
1965	4,658.72
1966	4,938.36
1967	5,213.44
1968	5,571.76
1969	5,893.76
1970	6,186.24
1971	6,497.08
1972	7,133.80
1973	7,580.16
1974	8,030.76
1975	8,630.92
1976	9,226.48
1977	9,779.44
1978	10,556.03
1979	11,479.46
1980	12,513.46
1981	13,773.10
1982	14,531.34
1983	15,239.24
1984	16,135.07
1985	16,822.51
1986	17,321.82
1987	18,426.51
1988	19,334.04
1989	20,099.55
1990	21,027.98

[47 FR 30734, July 15, 1982, as amended at 52 FR 8247, Mar. 17, 1987; 57 FR 44096, Sept. 24, 1992]

APPENDIX II TO SUBPART C OF PART 404—BENEFIT FORMULAS USED WITH AVERAGE INDEXED MONTHLY EARNINGS

As explained in § 404.212, we use one of the formulas below to compute your primary insurance amount from your average indexed monthly earnings (AIME). To select the appropriate formula, we find in the left-hand column the year after 1978 in which you reach age 62, or become disabled, or die before age 62. The benefit formula to be used in computing your primary insurance amount is on the same line in the right-hand columns. For example, if you reach age 62 or become disabled or die before age 62 in 1979, then we compute 90 percent of the first $180 of AIME, 32 percent of the next $905 of AIME, and 15 percent of AIME over $1,085. After we figure your amount for each step in the formula, we add the amounts. If the total is not already a multiple of $0.10, we round the total as follows:

(1) For computations using the benefit formulas in effect for 1979 through 1982, we round the total upward to the nearest $0.10, and

(2) For computations using the benefit formulas in effect for 1983 and later, we round the total downward to the nearest $0.10.

BENEFIT FORMULAS

Year you reach age 62 [1]	90 percent of the first—	plus 32 percent of the next—	plus 15 percent of AIME over—
1979	$180	$905	$1,085
1980	194	977	1,171
1981	211	1,063	1,274
1982	230	1,158	1,388
1983	254	1,274	1,528
1984	267	1,345	1,612
1985	280	1,411	1,691
1986	297	1,493	1,790
1987	310	1,556	1,866
1988	319	1,603	1,922
1989	339	1,705	2,044
1990	356	1,789	2,145
1991	370	1,860	2,230
1992	387	1,946	2,333

[1] Or become disabled or die before age 62.

[57 FR 44096, Sept. 24, 1992; 57 FR 45878, Oct. 5, 1992]

APPENDIX III TO SUBPART C OF PART 404—BENEFIT TABLE

This benefit table shows primary insurance amounts and maximum family benefits in effect in December 1978 based on cost-of-living increases which became effective for June 1978. (See § 404.403 for information on maximum family benefits.) You will also be able to find primary insurance amounts for an individual whose entitlement began in the period June 1977 through May 1978.

The benefit table in effect in December 1978 had a minimum primary insurance amount of $121.80. As explained in § 404.222(b), certain workers eligible, or who died without having been eligible, before 1982 had their benefit computed from this table. However, the minimum benefit provision was repealed for other workers by the 1981 amendments to the Act (the Omnibus Budget Reconciliation

Act of 1981, Pub. L. 97–35 as modified by Pub. L. 97–123). As a result, this benefit table includes a downward extension from the former minimum of $121.80 to the lowest primary insurance amount now possible. The extension is calculated as follows. For each single dollar of average monthly wage in the benefit table, the primary insurance amount shown for December 1978 is $121.80 multiplied by the ratio of that average monthly wage to $76. The upper limit of each primary insurance benefit range in column I of the table is $16.20 multiplied by the ratio of the average monthly wage in column III of the table to $76. The maximum family benefit is 150 percent of the corresponding primary insurance amount.

The repeal of the minimum benefit provision is effective with January 1982 for most workers and their families where the worker initially becomes eligible for benefits after 1981 or dies after 1981 without having been eligible before January 1982. For members of a religious order who are required to take a vow of poverty, as explained in 20 CFR 404.1024, and which religious order elected Social Security coverage before December 29, 1981, the repeal is effective with January 1992 based on first eligibility or death in that month or later.

To use this table, you must first compute the primary insurance benefit (column I) or the average monthly wage (column III), then move across the same line to either column II or column IV as appropriate. To determine increases in primary insurance amounts since December 1978 you should see appendix VI. Appendix VI tells you, by year, the percentage of the increases. In applying each cost-of-living increase to primary insurance amounts, we round the increased primary insurance amount to the next lower multiple of $0.10 if not already a multiple of $0.10. (For cost-of-living increases which are effective before June 1982, we round to the next higher multiple of $0.10.)

EXTENDED DECEMBER 1978 TABLE OF BENEFITS EFFECTIVE JANUARY 1982

[In dollars]

I. Primary insurance benefit: If an individual's primary insurance benefit (as determined under § 404.241(e)) is—		II. Primary insurance amount effective June 1977: Or his or her primary insurance amount is—	III. Average monthly wage: Or his or her average monthly wage (as determined under § 404.221) is—		IV. Primary insurance amount effective January 1982: Then his or her primary insurance amount is—	V. Maximum family benefits: And the maximum amount of benefits payable on the basis of his or her wages and self-employment income is—
At least—	But not more than—		At least—	But not more than—		
				1	1.70	2.60
	0.42		2	2	3.30	5.00
0.43	.63		3	3	4.90	7.40
.64	.85		4	4	6.50	9.80
.86	1.06		5	5	8.10	12.20
1.07	1.27		6	6	9.70	14.60
1.28	1.49		7	7	11.30	17.00
1.50	1.70		8	8	12.90	19.40
1.71	1.91		9	9	14.50	21.80
1.92	2.13		10	10	16.10	24.20
2.14	2.34		11	11	17.70	26.60
2.35	2.55		12	12	19.30	29.00
2.56	2.77		13	13	20.90	31.40
2.78	2.98		14	14	22.50	33.80
2.99	3.19		15	15	24.10	36.20
3.20	3.41		16	16	25.70	38.60
3.42	3.62		17	17	27.30	41.00
3.63	3.83		18	18	28.90	43.40
3.84	4.05		19	19	30.50	45.80
4.06	4.26		20	20	32.10	48.20
4.27	4.47		21	21	33.70	50.60
4.48	4.68		22	22	35.30	53.00
4.69	4.90		23	23	36.90	55.40
4.91	5.11		24	24	38.50	57.80
5.12	5.32		25	25	40.10	60.20
5.33	5.54		26	26	41.70	62.60
5.55	5.75		27	27	43.30	65.00
5.76	5.96		28	28	44.90	67.40
5.97	6.18		29	29	46.50	69.80
6.19	6.39		30	30	48.10	72.20
6.40	6.60		31	31	49.70	74.60
6.61	6.82		32	32	51.30	77.00
6.83	7.03		33	33	52.90	79.40
7.04	7.24		34	34	54.50	81.80
7.25	7.46		35	35	56.10	84.20
7.47	7.67		36	36	57.70	86.60

EXTENDED DECEMBER 1978 TABLE OF BENEFITS EFFECTIVE JANUARY 1982—Continued

[In dollars]

I. Primary insurance benefit: If an individual's primary insurance benefit (as determined under § 404.241(e)) is—		II. Primary insurance amount effective June 1977: Or his or her primary insurance amount is—	III. Average monthly wage: Or his or her average monthly wage (as determined under § 404.221) is—		IV. Primary insurance amount effective January 1982: Then his or her primary insurance amount is—	V. Maximum family benefits: And the maximum amount of benefits payable on the basis of his or her wages and self-employment income is—
At least—	But not more than—		At least—	But not more than—		
7.68	7.88		37	37	59.30	89.00
7.89	8.10		38	38	60.90	91.40
8.11	8.31		39	39	62.60	93.90
8.32	8.52		40	40	64.20	96.30
8.53	8.73		41	41	65.80	98.70
8.74	8.95		42	42	67.40	101.10
8.96	9.16		43	43	69.00	103.50
9.17	9.37		44	44	70.60	105.90
9.38	9.59		45	45	72.20	108.30
9.60	9.80		46	46	73.80	110.70
9.81	10.01		47	47	75.40	113.10
10.02	10.23		48	48	77.00	115.50
10.24	10.44		49	49	78.60	117.90
10.45	10.65		50	50	80.20	120.30
10.66	10.87		51	51	81.80	122.70
10.88	11.08		52	52	83.40	125.10
11.09	11.29		53	53	85.00	127.50
11.30	11.51		54	54	86.60	129.90
11.52	11.72		55	55	88.20	132.30
11.73	11.93		56	56	89.80	134.70
11.94	12.15		57	57	91.40	137.10
12.16	12.36		58	58	93.00	139.50
12.37	12.57		59	59	94.60	141.90
12.58	12.78		60	60	96.20	144.30
12.79	13.00		61	61	97.80	146.70
13.01	13.21		62	62	99.40	149.10
13.22	13.42		63	63	101.00	151.50
13.43	13.64		64	64	102.60	153.90
13.65	13.85		65	65	104.20	156.30
13.86	14.06		66	66	105.80	158.70
14.07	14.28		67	67	107.40	161.10
14.29	14.49		68	68	109.00	163.50
14.50	14.70		69	69	110.60	165.90
14.71	14.92		70	70	112.20	168.30
14.93	15.13		71	71	113.80	170.70
15.14	15.34		72	72	115.40	173.10
15.35	15.56		73	73	117.00	175.50
15.57	15.77		74	74	118.60	177.90
15.78	15.98		75	75	120.20	180.30
15.99	16.20		76	76	121.80	182.70

TABLE OF BENEFITS IN EFFECT IN DECEMBER 1978

[In dollars]

I. Primary insurance benefit: If an individual's primary insurance benefit (as determined under § 404.241(e)) is—		II. Primary insurance amount effective June 1977: Or his or her primary insurance amount is—	III. Average monthly wage: Or his or her average monthly wage (as determined under § 404.221) is—		IV. Primary insurance amount effective June 1978: Then his or her primary insurance amount is—	V. Maximum family benefits: And the maximum amount of benefits payable on the basis of his or her wages and self-employment income is—
At least—	But not more than—		At least—	But not more than—		
	16.20	114.30		76	121.80	182.70
16.21	16.84	116.10	77	78	123.70	185.60
16.85	17.60	118.80	79	80	126.60	189.90
17.61	18.40	121.00	81	81	128.90	193.50
18.41	19.24	123.00	82	83	131.20	196.80
19.25	20.00	125.80	84	85	134.00	201.00
20.01	20.64	128.10	86	87	136.50	204.80
20.65	21.28	130.10	88	89	138.60	207.90

TABLE OF BENEFITS IN EFFECT IN DECEMBER 1978—Continued

[In dollars]

I. Primary insurance benefit: If an individual's primary insurance benefit (as determined under § 404.241(e)) is—		II. Primary insurance amount effective June 1977: Or his or her primary insurance amount is—	III. Average monthly wage: Or his or her average monthly wage (as determined under § 404.221) is—		IV. Primary insurance amount effective June 1978: Then his or her primary insurance amount is—	V. Maximum family benefits: And the maximum amount of benefits payable on the basis of his or her wages and self-employment income is—
At least—	But not more than—		At least—	But not more than—		
21.29	21.88	132.70	90	90	141.40	212.10
21.89	22.28	135.00	91	92	143.80	215.70
22.29	22.68	137.20	93	94	146.20	219.20
22.59	23.08	139.40	95	96	148.50	222.80
23.09	23.44	142.00	97	97	151.30	227.00
23.45	23.76	144.30	98	99	153.70	230.60
23.77	24.20	147.10	100	101	156.70	235.10
24.21	24.60	149.20	102	102	158.90	238.50
24.61	25.00	151.70	103	104	161.60	242.40
25.01	25.48	154.50	105	106	164.60	246.90
25.49	25.92	157.00	107	107	167.30	251.00
25.93	26.40	159.40	108	109	169.80	254.80
26.41	26.94	161.90	110	113	172.50	258.80
26.95	27.46	164.20	114	118	174.90	262.40
27.47	28.00	166.70	119	122	177.60	266.50
28.01	28.68	169.30	123	127	180.40	270.60
28.69	29.25	171.80	128	132	183.00	274.60
29.26	29.68	174.10	133	136	185.50	278.30
29.69	30.36	176.50	137	141	188.00	282.10
30.37	30.92	179.10	142	146	190.80	286.20
30.93	31.36	181.70	147	150	193.60	290.40
31.37	32.00	183.90	151	155	195.90	293.90
32.01	32.60	186.50	156	160	198.70	298.10
32.61	33.20	189.00	161	164	201.30	302.00
33.21	33.88	191.40	165	169	203.90	305.90
33.89	34.50	194.00	170	174	206.70	310.10
34.51	35.00	196.30	175	178	209.10	313.70
35.01	35.80	198.90	179	183	211.90	318.00
35.81	36.40	201.30	184	188	214.40	321.70
36.41	37.08	203.90	189	193	217.20	326.00
37.09	37.60	206.40	194	197	219.90	329.90
37.61	38.20	208.80	198	202	222.40	333.60
38.21	39.12	211.50	203	207	225.30	338.00
39.13	39.68	214.00	208	211	228.00	342.00
39.69	40.33	216.00	212	216	230.10	345.20
40.34	41.12	218.70	217	221	233.00	349.50
41.13	41.76	221.20	222	225	235.60	353.40
41.77	42.44	223.90	226	230	238.50	357.80
42.45	43.20	226.30	231	235	241.10	361.70
43.21	43.76	229.10	236	239	244.00	366.10
43.77	44.44	231.20	240	244	246.30	371.10
44.45	44.88	233.50	245	249	248.70	378.80
44.89	45.60	236.40	250	253	251.80	384.90
		238.70	254	258	254.30	392.50
		240.80	259	263	256.50	400.00
		243.70	264	267	259.60	206.00
		246.10	268	272	262.10	413.70
		248.70	273	277	264.90	421.20
		251.00	278	281	267.40	427.20
		253.50	282	286	270.00	434.90
		256.20	287	291	272.90	442.60
		258.30	292	295	275.10	448.50
		261.10	296	300	278.10	456.10
		263.50	301	305	280.70	463.80
		265.80	306	309	283.10	469.80
		268.50	310	314	286.00	477.40
		270.70	315	319	288.30	485.10
		273.20	320	323	291.00	491.10
		275.80	324	328	293.80	498.70
		278.10	329	333	296.20	506.20
		281.00	334	337	299.30	512.50
		283.00	338	342	301.40	519.90
		285.60	343	347	304.20	527.50

TABLE OF BENEFITS IN EFFECT IN DECEMBER 1978—Continued

[In dollars]

I. Primary insurance benefit: If an individual's primary insurance benefit (as determined under § 404.241(e)) is—		II. Primary insurance amount effective June 1977: Or his or her primary insurance amount is—	III. Average monthly wage: Or his or her average monthly wage (as determined under § 404.221) is—		IV. Primary insurance amount effective June 1978: Then his or her primary insurance amount is—	V. Maximum family benefits: And the maximum amount of benefits payable on the basis of his or her wages and self-employment income is—
At least—	But not more than—		At least—	But not more than—		
		288.30	348	351	307.10	533.60
		290.50	352	356	309.40	541.20
		293.30	357	361	312.40	548.80
		295.60	362	365	314.90	554.90
		297.90	366	370	317.30	562.50
		300.60	371	375	320.20	569.90
		303.10	376	379	322.90	576.30
		305.70	380	384	325.60	583.90
		307.90	385	389	328.00	591.30
		310.30	390	393	330.50	597.40
		313.00	394	398	333.40	605.10
		315.40	399	403	336.00	612.70
		318.20	404	407	338.90	618.60
		320.20	408	412	341.10	626.30
		322.50	413	417	343.50	633.80
		324.80	418	421	346.00	639.90
		327.40	422	426	348.70	647.50
		329.60	427	431	351.10	655.10
		331.60	432	436	353.20	662.70
		334.40	437	440	356.20	665.70
		336.50	441	445	358.40	669.70
		338.70	446	450	360.80	673.40
		341.30	451	454	363.50	676.30
		343.50	455	459	365.90	680.10
		345.80	460	464	368.30	683.80
		347.90	465	468	370.60	687.10
		350.70	469	473	373.50	690.80
		352.60	474	478	375.60	694.60
		354.90	479	482	378.00	697.70
		357.40	483	487	380.70	701.60
		359.70	488	492	383.10	705.40
		361.90	493	496	385.50	708.40
		364.50	497	501	388.20	712.10
		366.60	502	506	390.50	715.80
		368.90	507	510	392.90	719.00
		371.10	511	515	395.30	722.80
		373.70	516	520	398.00	726.70
		375.80	521	524	400.30	729.50
		378.10	525	529	402.70	733.40
		380.80	530	534	405.60	737.10
		382.80	535	538	407.70	740.20
		385.10	539	543	410.20	744.10
		387.60	544	548	412.80	747.80
		389.90	549	553	415.30	751.60
		392.10	554	556	417.60	753.90
		393.90	557	560	419.60	756.90
		396.10	561	563	421.90	759.30
		398.20	564	567	424.10	762.30
		400.40	568	570	426.50	764.50
		402.30	571	574	428.50	767.50
		404.40	575	577	430.70	769.90
		406.20	578	581	432.70	772.80
		408.40	582	584	435.00	775.20
		410.20	585	588	436.90	778.20
		412.60	589	591	439.50	780.50
		414.60	592	595	441.60	783.50
		416.70	596	598	443.80	785.60
		418.70	599	602	446.00	788.90
		420.70	603	605	448.10	791.10
		422.80	606	609	450.30	794.00
		424.90	610	612	452.60	796.50
		426.90	613	616	454.70	799.50
		428.90	617	620	456.80	802.50

TABLE OF BENEFITS IN EFFECT IN DECEMBER 1978—Continued

[In dollars]

I. Primary insurance benefit: If an individual's primary insurance benefit (as determined under § 404.241(e)) is—		II. Primary insurance amount effective June 1977: Or his or her primary insurance amount is—	III. Average monthly wage: Or his or her average monthly wage (as determined under § 404.221) is—		IV. Primary insurance amount effective June 1978: Then his or her primary insurance amount is—	V. Maximum family benefits: And the maximum amount of benefits payable on the basis of his or her wages and self-employment income is—
At least—	But not more than—		At least—	But not more than—		
		431.00	621	623	459.10	804.80
		433.00	624	627	461.20	807.90
		435.10	628	630	463.40	810.70
		437.10	631	634	465.60	814.70
		439.20	635	637	467.80	818.50
		441.40	638	641	470.10	822.40
		443.20	642	644	472.10	826.10
		445.40	645	648	474.40	830.10
		447.40	649	652	476.50	833.70
		448.60	653	656	477.80	836.10
		449.90	657	660	479.20	838.40
		451.50	661	665	480.90	841.50
		453.10	666	670	482.60	844.50
		454.80	671	675	484.40	847.40
		456.40	676	680	486.10	850.50
		458.00	681	685	487.80	853.50
		459.80	686	690	489.70	856.40
		461.20	691	695	491.20	859.60
		462.80	696	700	492.90	862.60
		464.50	701	705	494.70	865.60
		466.10	706	710	496.40	868.60
		467.70	711	715	498.20	871.50
		469.40	716	720	500.00	874.60
		471.00	721	725	501.70	877.60
		472.60	726	730	503.40	880.70
		474.20	731	735	505.10	883.80
		475.90	736	740	506.90	886.70
		477.40	741	745	508.50	889.90
		478.90	746	750	510.10	892.70
		480.40	751	755	511.70	896.40
		481.80	756	760	513.20	897.80
		483.20	761	765	514.70	900.40
		484.50	766	770	516.00	903.00
		485.80	771	775	517.40	905.40
		487.20	776	780	518.90	907.90
		488.60	781	785	520.40	910.40
		489.80	786	790	521.70	912.90
		491.10	791	795	523.10	915.40
		492.50	796	800	524.60	918.00
		494.00	801	805	526.20	920.50
		495.30	806	810	527.50	923.00
		496.70	811	815	529.00	925.60
		498.00	816	820	530.40	928.00
		499.40	821	825	531.90	930.60
		500.70	826	830	533.30	933.10
		502.00	831	835	534.70	935.70
		503.30	836	840	536.10	938.10
		504.70	841	845	537.60	940.80
		506.00	846	850	538.90	943.00
		507.50	851	855	540.50	945.70
		508.80	856	860	541.90	948.10
		510.20	861	865	543.40	950.70
		511.50	866	870	544.80	953.20
		512.90	871	875	546.30	955.70
		514.10	876	880	547.60	958.20
		515.50	881	885	549.10	960.80
		516.80	886	890	550.40	963.20
		518.20	891	895	551.90	966.00
		519.60	896	900	553.40	968.30
		521.00	901	905	554.90	970.90
		522.30	906	910	556.30	973.50
		523.70	911	915	557.80	976.00
		525.10	916	920	559.30	978.30

TABLE OF BENEFITS IN EFFECT IN DECEMBER 1978—Continued

[In dollars]

I. Primary insurance benefit: If an individual's primary insurance benefit (as determined under § 404.241(e)) is—		II. Primary insurance amount effective June 1977: Or his or her primary insurance amount is—	III. Average monthly wage: Or his or her average monthly wage (as determined under § 404.221) is—		IV. Primary insurance amount effective June 1978: Then his or her primary insurance amount is—	V. Maximum family benefits: And the maximum amount of benefits payable on the basis of his or her wages and self-employment income is—
At least—	But not more than—		At least—	But not more than—		
		526.30	921	925	560.60	961.00
		527.60	926	930	561.90	983.40
		529.00	931	935	563.40	985.90
		530.40	936	940	564.90	988.50
		531.70	941	945	566.30	991.00
		533.00	946	950	567.70	993.50
		534.50	951	955	569.30	996.10
		535.90	956	960	570.80	998.60
		537.30	961	965	572.30	1,001.00
		538.40	966	970	573.40	1,003.60
		539.80	971	975	574.90	1,006.20
		541.20	976	980	576.40	1,008.50
		542.60	981	985	577.90	1,011.10
		543.80	986	990	579.20	1,013.60
		545.20	991	995	580.70	1,016.20
		546.60	996	1,000	582.20	1,018.60
		547.80	1,001	1,005	583.50	1,020.70
		548.90	1,006	1,010	584.60	1,023.20
		550.20	1,011	1,015	586.00	1,025.30
		551.50	1,016	1,020	587.40	1,027.80
		552.60	1,021	1,025	588.60	1,029.90
		553.80	1,026	1,030	589.80	1,032.20
		555.10	1,031	1,035	591.20	1,034.50
		556.20	1,036	1,040	592.40	1,036.70
		557.50	1,041	1,045	593.80	1,039.10
		558.80	1,046	1,050	595.20	1,041.30
		559.80	1,051	1,055	596.20	1,043.40
		561.10	1,056	1,060	597.60	1,045.90
		562.40	1,061	1,065	599.00	1,048.00
		563.60	1,066	1,070	600.30	1,050.50
		564.80	1,071	1,075	601.60	1,052.60
		566.00	1,076	1,080	602.80	1,054.90
		567.30	1,081	1,085	604.20	1,057.10
		568.40	1,086	1,090	605.40	1,059.40
		569.70	1,091	1,095	606.80	1,061.70
		571.00	1,096	1,100	608.20	1,064.00
		572.00	1,101	1,105	609.20	1,066.10
		573.30	1,106	1,110	610.60	1.068.50
		574.60	1,111	1,115	612.00	1,070.70
		575.70	1,116	1,120	613.20	1,073.10
		577.00	1,121	1,125	614.60	1,075.30
		578.20	1,126	1,130	615.80	1,077.60
		579.40	1,131	1,135	617.10	1,079.70
		580.60	1,136	1,140	618.40	1,082.20
		581.90	1,141	1,145	619.80	1,084.40
		583.10	1,146	1,150	621.10	1,086.70
		584.20	1,151	1,555	622.20	1,088.80
		585.50	1,156	1,160	623.60	1,091.10
		586.70	1,161	1,165	624.90	1,093.40
		587.90	1,166	1,170	626.20	1,095.80
		589.20	1,171	1,175	627.50	1,098.00
		590.30	1,176	1,180	628.70	1,100.20
		591.40	1,181	1,185	629.90	1,102.20
		592.60	1,186	1,190	631.20	1,104.30
		593.70	1,191	1,195	632.30	1,106.50
		594.80	1,196	1,200	633.50	1,108.60
		595.90	1,201	1,205	634.70	1,110.60
		597.10	1,206	1,210	636.00	1,112.90
		598.20	1,211	1,215	637.10	1,114.90
		599.30	1,216	1,220	638.30	1,117.00
		600.40	1,221	1,225	639.50	1,119.00
		601.60	1,226	1,230	640.80	1,121.20
		602.70	1,231	1,235	641.90	1,123.30

TABLE OF BENEFITS IN EFFECT IN DECEMBER 1978—Continued

[In dollars]

I. Primary insurance benefit: If an individual's primary insurance benefit (as determined under § 404.241(e)) is—		II. Primary insurance amount effective June 1977: Or his or her primary insurance amount is—	III. Average monthly wage: Or his or her average monthly wage (as determined under § 404.221) is—		IV. Primary insurance amount effective June 1978: Then his or her primary insurance amount is—	V. Maximum family benefits: And the maximum amount of benefits payable on the basis of his or her wages and self-employment income is—
At least—	But not more than—		At least—	But not more than—		
		603.80	1,236	1,240	643.10	1,125.40
		605.00	1,241	1,245	644.40	1,127.50
		606.10	1,246	1,250	645.50	1,129.60
		607.20	1,251	1,255	646.70	1,131.60
		608.30	1,256	1,260	647.90	1,133.80
		609.50	1,261	1,265	649.20	1,135.90
		610.60	1,266	1,270	650.30	1,138.00
		611.70	1,271	1,275	651.50	1,140.00
		612.80	1,276	1,280	652.70	1,142.20
		613.80	1,281	1,285	653.70	1,144.10
		614.80	1,286	1,290	654.90	1,146.10
		616.00	1,291	1,295	656.10	1,148.00
		617.00	1,296	1,300	657.20	1,150.00
		618.10	1,301	1,305	658.30	1,152.00
		619.10	1,306	1,310	659.40	1,154.00
		620.20	1,311	1,315	660.60	1,155.90
		621.30	1,316	1,320	661.70	1,157.90
		622.30	1,321	1,325	662.80	1,159.80
		623.40	1,326	1,330	664.00	1,161.90
		624.40	1,331	1,335	665.00	1,163.80
		625.50	1,336	1,340	666.20	1,165.80
		626.60	1,341	1,345	667.40	1,167.70
		627.60	1,346	1,350	668.40	1,169.70
		628.70	1,351	1,355	669.60	1,171.70
		629.70	1,356	1,360	670.70	1,173.70
		630.80	1,361	1,365	671.90	1,175.60
		631.80	1,366	1,370	672.90	1,177.70
		632.90	1,371	1,375	674.10	1,179.60
		633.90	1,376	1,380	675.20	1,181.60
		634.90	1,381	1,385	676.20	1,183.40
		635.90	1,386	1,390	677.30	1,185.30
		636.90	1,391	1,395	678.30	1,187.10
		637.90	1,396	1,400	679.40	1,189.00
		638.90	1,401	1,405	680.50	1,190.80
		639.90	1,406	1,410	681.50	1,192.70
		640.90	1,411	1,415	682.60	1,194.60
		641.90	1,416	1,420	683.70	1,196.50
		642.90	1,421	1,425	685.70	1,198.30
		643.90	1,426	1,430	684.80	1,200.20
		644.90	1,431	1,435	686.90	1,202.00
		645.90	1,436	1,440	687.90	1,203.90
		646.90	1,441	1,445	689.00	1,205.70
		647.90	1,446	1,450	690.10	1,207.70
		648.90	1,451	1,455	691.10	1,209.50
		649.90	1,456	1,460	692.20	1,211.40
		650.90	1,461	1,465	693.30	1,213.20
		651.90	1,466	1,470	694.30	1,215.10
		652.90	1,471	1,475	695.40	1,216.90

[47 FR 30734, July 15, 1982; 47 FR 35479, Aug. 16, 1982, as amended at 48 FR 46143, Oct. 11, 1983; 48 FR 50076, Oct. 31, 1983]

APPENDIX IV TO SUBPART C OF PART 404—EARNINGS NEEDED FOR A YEAR OF COVERAGE AFTER 1950

MINIMUM SOCIAL SECURITY EARNINGS TO QUALIFY FOR A YEAR OF COVERAGE AFTER 1950 FOR PURPOSES OF THE—

Year	Special minimum primary insurance amount	Benefit computations described in section 404.213(d)[2]
1951–1954	$900	$900
1955–1958	1,050	1,050
1959–1965	1,200	1,200
1966–1967	1,650	1,650
1968–1971	1,950	1,950
1972	2,250	2,250
1973	2,700	2,700
1974	3,300	3,300
1975	3,525	3,525
1976	3,825	3,825
1977	4,125	4,125
1978	4,425	4,425
1979	4,725	4,725
1980	5,100	5,100
1981	5,550	5,550
1982	6,075	6,075
1983	6,675	6,675
1984	7,050	7,050
1985	7,425	7,425
1986	7,875	7,875
1987	8,175	8,175
1988	8,400	8,400
1989	8,925	8,925
1990	9,525	9,525
1991	5,940	9,900
1992	6,210	10,350

[2] Applies only to certain individuals with pensions from noncovered employment.

NOTE: For 1951–78, the amounts shown are 25 percent of the contribution and benefit base (the contribution and benefit base is the same as the annual wage limitation as shown in § 404.1047) in effect. For years after 1978, however, the amounts are 25 percent of what the contribution and benefit base would have been if the 1977 Social Security Amendments had not been enacted, except, for special minimum benefit purposes, the applicable percentage is 15 percent for years after 1990.

[57 FR 44096, Sept. 24, 1992]

APPENDIX V TO SUBPART C OF PART 404—COMPUTING THE SPECIAL MINIMUM PRIMARY INSURANCE AMOUNT AND RELATED MAXIMUM FAMILY BENEFITS

These tables are based on section 215(a)(1)(C)(i) of the Social Security Act, as amended. They include the percent cost-of-living increase shown in appendix VI for each effective date.

JUNE 1979

I. Years of coverage	II. Primary insurance amount	III. Maximum family benefit
11	$12.70	$19.10
12	25.30	38.00
13	38.00	57.00
14	50.60	75.90
15	63.20	94.90
16	75.90	113.90
17	88.50	132.80
18	101.20	151.80
19	113.80	170.70
20	126.40	189.60
21	139.10	208.70
22	151.70	227.60
23	164.40	246.60
24	177.00	265.50
25	189.60	284.50
26	202.30	303.50
27	214.90	322.40
28	227.50	341.30
29	240.20	360.30
30	252.80	379.20

JUNE 1980

I. Years of coverage	II. Primary insurance amount	III. Maximum family benefit
11	$14.60	$21.90
12	29.00	43.50
13	43.50	65.30
14	57.90	86.90
15	72.30	108.50
16	86.80	130.20
17	101.20	151.80
18	115.70	173.60
19	130.10	195.20
20	144.50	216.80
21	159.00	238.60
22	173.40	260.20
23	188.00	282.00
24	202.40	303.60
25	216.80	325.20
26	231.30	347.00
27	245.70	368.60
28	260.10	390.20
29	274.60	411.90
30	289.00	433.50

JUNE 1981

I. Years of coverage	II. Primary insurance amount	III. Maximum family benefits
11	$16.30	$24.50
12	32.30	48.50
13	48.40	72.70
14	64.40	96.70
15	80.40	120.70
16	96.60	144.90
17	112.60	168.90
18	128.70	193.10
19	144.70	217.10
20	160.70	241.10
21	176.90	265.40
22	192.90	289.40
23	209.10	313.70
24	225.10	337.70
25	241.10	361.70

JUNE 1981—Continued

I. Years of coverage	II. Primary insurance amount	III. Maximum family benefits
26	257.30	386.00
27	273.30	410.00
28	289.30	434.00
29	305.40	458.10
30	321.40	482.10

JUNE 1982

I. Years of coverage	II. Primary insurance amount	III. Maximum family benefit
11	$17.50	$26.30
12	34.60	52.00
13	51.90	78.00
14	69.10	103.80
15	86.30	129.60
16	103.70	155.60
17	120.90	181.30
18	138.20	207.30
19	155.40	233.10
20	172.50	258.90
21	189.90	285.00
22	207.10	310.80
23	224.50	336.90
24	241.70	362.60
25	258.90	388.40
26	276.30	414.50
27	293.50	440.30
28	310.70	466.10
29	327.90	491.90
30	345.10	517.70

DECEMBER 1983

I. Years of coverage	II. Primary insurance amount	III. Maximum family benefit
11	$18.10	$27.20
12	35.80	53.80
13	53.70	80.70
14	71.50	107.40
15	89.30	134.10
16	107.30	161.00
17	125.10	187.60
18	143.00	214.50
19	160.80	241.20
20	178.50	267.90
21	196.50	294.90
22	214.30	321.60
23	232.30	348.60
24	250.10	375.20
25	267.90	401.90
26	285.90	429.00
27	303.70	455.70
28	321.50	482.40
29	339.30	509.10
30	357.10	535.80

DECEMBER 1984

I. Years of coverage	II. Primary insurance amount	III. Maximum family benefit
11	$18.70	$28.10
12	37.00	55.60
13	55.50	83.50

DECEMBER 1984—Continued

I. Years of coverage	II. Primary insurance amount	III. Maximum family benefit
14	74.00	111.10
15	92.40	138.70
16	111.00	166.60
17	129.40	194.10
18	148.00	222.00
19	166.40	249.60
20	184.70	277.20
21	203.30	305.20
22	221.80	332.80
23	240.40	360.80
24	258.80	388.30
25	277.20	415.90
26	295.90	444.00
27	314.30	471.60
28	332.70	499.20
29	351.10	526.90
30	369.50	554.50

DECEMBER 1985

I. Years of coverage	II. Primary insurance amount	III. Maximum family benefit
11	$19.20	$28.90
12	38.10	57.30
13	57.20	86.00
14	76.20	114.50
15	95.20	142.90
16	114.40	171.70
17	133.40	200.10
18	152.50	228.80
19	171.50	257.30
20	190.40	285.70
21	209.60	314.60
22	228.60	343.10
23	247.80	371.90
24	266.80	400.30
25	285.70	428.70
26	305.00	457.70
27	324.00	486.20
28	343.00	514.60
29	361.90	543.20
30	380.90	571.60

DECEMBER 1986

I. Years of coverage	II. Primary insurance amount	III. Maximum family benefit
11	$19.40	$29.20
12	38.50	58.00
13	57.90	87.10
14	77.10	115.90
15	96.40	144.70
16	115.80	173.90
17	135.10	202.70
18	154.40	231.70
19	173.70	260.60
20	192.80	289.40
21	212.30	318.60
22	231.50	347.50
23	251.00	376.70
24	270.20	405.50
25	289.40	434.20
26	308.90	463.60
27	328.20	492.50
28	347.40	521.20

DECEMBER 1986—Continued

I. Years of coverage	II. Primary insurance amount	III. Maximum family benefit
29	366.60	550.20
30	385.80	579.00

DECEMBER 1987

I. Years of coverage	II. Primary insurance amount	III. Maximum family benefit
11	$20.20	$30.40
12	40.10	60.40
13	60.30	90.70
14	80.30	120.70
15	100.40	150.70
16	120.60	181.20
17	140.70	211.20
18	160.80	241.40
19	180.90	271.50
20	200.80	301.50
21	221.20	331.90
22	241.20	362.00
23	261.50	392.50
24	281.50	422.50
25	301.50	452.40
26	321.80	483.00
27	341.90	513.10
28	361.90	543.00
29	381.90	573.30
30	402.00	603.30

DECEMBER 1988

I. Years of coverage	II. Primary insurance amount	III. Maximum family benefit
11	$21.00	$31.60
12	41.70	62.80
13	62.70	94.30
14	83.50	125.50
15	104.40	156.70
16	125.40	188.40
17	146.30	219.60
18	167.20	251.00
19	188.10	282.30
20	208.80	313.50
21	230.00	345.10
22	250.80	376.40
23	271.90	408.20
24	292.70	439.40
25	313.50	470.40
26	334.60	502.30
27	355.50	533.60
28	376.30	564.70
29	397.10	596.20
30	418.00	627.40

DECEMBER 1989

I. Years of coverage	II. Primary insurance amount	III. Maximum family benefit
11	$21.90	$33.00
12	43.60	65.70
13	65.60	98.70
14	87.40	131.30
15	109.30	164.00
16	131.20	197.20

DECEMBER 1989—Continued

I. Years of coverage	II. Primary insurance amount	III. Maximum family benefit
17	153.10	229.90
18	175.00	262.70
19	196.90	295.50
20	218.60	328.20
21	240.80	361.30
22	262.50	394.00
23	284.60	427.30
24	306.40	460.00
25	328.20	492.50
26	350.30	525.90
27	372.20	558.60
28	393.90	591.20
29	415.70	624.20
30	437.60	656.80

DECEMBER 1990

I. Years of coverage	II. Primary insurance amount	III. Maximum family benefit
11	$23.00	$34.70
12	45.90	69.20
13	69.10	104.00
14	92.10	138.30
15	115.20	172.80
16	138.20	207.80
17	161.30	242.30
18	184.40	276.80
19	207.50	311.40
20	230.40	345.90
21	253.80	380.80
22	276.60	415.20
23	299.90	450.30
24	322.90	484.80
25	345.90	519.00
26	369.20	554.20
27	392.20	588.70
28	415.10	623.10
29	438.10	657.90
30	461.20	692.20

DECEMBER 1991

I. Years of coverage	II. Primary insurance amount	III. Maximum family benefit
11	$23.80	$35.90
12	47.50	71.70
13	71.60	107.80
14	95.50	143.40
15	119.40	179.10
16	143.30	215.40
17	167.20	251.20
18	191.20	287.00
19	215.10	322.90
20	238.90	358.60
21	263.10	394.80
22	286.80	430.50
23	310.90	466.90
24	334.80	502.70
25	358.60	538.20
26	382.80	574.70
27	406.70	610.40
28	430.40	646.10
29	454.30	682.20

DECEMBER 1991—Continued

I. Years of coverage	II. Primary insurance amount	III. Maximum family benefit
30	478.20	717.80

NOTE: The amounts shown in the above table for years of coverage less than 19 are not payable for June 1981 through December 1981 because the corresponding values shown in column II are less than the $135.70 minimum primary insurance amount payable for that period. For months after December 1981, a special minimum primary insurance amount of $128.70 will be payable.

[47 FR 30734, July 15, 1982, as amended at 52 FR 8248, Mar. 17, 1987; 57 FR 44097, Sept. 24, 1992; 57 FR 45878, Oct. 5, 1992]

APPENDIX VI TO SUBPART C OF PART 404—PERCENTAGE OF AUTOMATIC INCREASES IN PRIMARY INSURANCE AMOUNTS SINCE 1978

Effective date	Percentage increase
06/79	9.9
06/80	14.3
06/81	11.2
06/82	7.4
12/83	3.5
12/84	3.5
12/85	3.1
12/86	1.3
12/87	4.2
12/88	4.0
12/89	4.7
12/90	5.4
12/91	3.7

[57 FR 44097, Sept. 24, 1992]

APPENDIX VII TO SUBPART C OF PART 404—''OLD-LAW'' CONTRIBUTION AND BENEFIT BASE

Explanation: We use these figures to determine the earnings needed for a year of coverage for years after 1978 (see § 404.261 and appendix IV). This is the contribution and benefit base that would have been effective under the Social Security Act without the enactment of the 1977 amendments.

Year	Amount
1979	$18,900
1980	20,400
1981	22,200
1982	24,300
1983	26,700
1984	28,200
1985	29,700
1986	31,500
1987	32,700
1988	33,600
1989	35,700
1990	38,100
1991	39,600
1992	41,400

[52 FR 8248, Mar. 17, 1987, as amended at 57 FR 44097, Sept. 24, 1992; 57 FR 45878, Oct. 5, 1992]

Subpart D—Old-Age, Disability, Dependents' and Survivors' Insurance Benefits; Period of Disability

AUTHORITY: Secs. 202, 203(a) and (b), 205(a), 216, 223, 225, 228(a)–(e), and 702(a)(5) of the Social Security Act (42 U.S.C. 402, 403(a) and (b), 405(a), 416, 423, 425, 428(a)–(e), and 902(a)(5)).

SOURCE: 44 FR 34481, June 15, 1979, unless otherwise noted.

GENERAL

§ 404.301 Introduction.

This subpart sets out what requirements you must meet to qualify for social security benefits, how your benefit amounts are figured, when your right to benefits begins and ends, and how family relationships are determined. These benefits are provided by title II of the Social Security Act. They include—

(a) *For workers*, old-age and disability benefits and benefit protection during periods of disability;

(b) *For a worker's dependents*, benefits for a worker's wife, divorced wife, husband, divorced husband, and child;

(c) *For a worker's survivors*, benefits for a worker's widow, widower, divorced wife, child, and parent, and a lump-sum death payment; and

(d) *For uninsured persons age 72 or older*, special payments.

§ 404.302 Other regulations related to this subpart.

This subpart is related to several others. Subpart H sets out what evidence you need to prove you qualify for benefits. Subpart P describes what is needed to prove you are disabled. Subpart E describes when your benefits may be reduced or stopped for a time. Subpart G describes the need for and the effect of an application for benefits. Part 410 describes when you may qualify for black lung benefits. Part 416 describes when you may qualify for supplemental security income. Also 42 CFR part 405 describes when you may

qualify for hospital and medical insurance if you are aged, disabled, or have chronic kidney disease.

§ 404.303 Definitions.

As used in this subpart:

Apply means to sign a form or statement that the Social Security Administration accepts as an application for benefits under the rules set out in subpart G.

Eligible means that a person would meet all the requirements for entitlement to benefits for a period of time but has not yet applied.

Entitled means that a person has applied and has proven his or her right to benefits for a period of time.

Insured person or *the insured* means someone who has enough earnings under social security to permit payment of benefits on his or her earnings record. The requirements for becoming insured are described in subpart B.

Permanent home means the true and fixed home (legal domicile) of a person. It is the place to which a person intends to return whenever he or she is absent.

Primary insurance amount means an amount that is determined from the average monthly earnings creditable to the insured person. This term and the manner in which it is computed are explained in subpart C.

We or *Us* means the Social Security Administration.

You means the person who has applied for benefits or the person for whom someone else has applied.

§ 404.304 What are the general rules on benefit amounts?

This subpart describes how we determine the highest monthly benefit amount you ordinarily could qualify for under each type of benefit. However, the highest monthly benefit amount you could qualify for may not be the amount you will be paid. In a particular month, your benefit amount may be reduced or not paid at all. Under some circumstances, your benefit amount may be increased. The most common reasons for a change in your benefit amount are listed below.

(a) *Age*. Sections 404.410 through 404.413 explain how your old-age, wife's or husband's, or widow's or widower's benefits may be reduced if you choose to receive them before you attain full retirement age (as defined in § 404.409).

(b) *Earnings*. Sections 404.415 through 404.418 explain how deductions will be made from your benefits if your earnings or the insured person's earnings go over certain limits.

(c) *Overpayments and underpayments*. Your benefits may be increased or decreased to make up for any previous overpayment or underpayment made on the insured person's record. For more information about this, see subpart F of this part.

(d) *Family maximum*. Sections 404.403 through 404.406 explain that there is a maximum amount payable on each insured person's earnings record. If you are entitled to benefits as the insured's dependent or survivor, your benefits may be reduced to keep total benefits payable to the insured's family within these limits.

(e) *Government pension offset*. If you are entitled to wife's, husband's, widow's, widower's, mother's or father's benefits and receive a Government pension for work that was not covered under social security, your monthly benefits may be reduced because of that pension. Special age 72 payments may also be reduced because of a Government pension. For more information about this, see § 404.408a which covers reductions for Government pensions and § 404.384(c) which covers special age 72 payments.

(f) *Rounding*. After all other deductions or reductions, we reduce any monthly benefit that is not a multiple of $1 to the next lower multiple of $1.

[68 FR 4702, Jan. 30, 2003]

§ 404.305 When you may not be entitled to benefits.

In addition to the situations described in § 404.304 when you may not receive a benefit payment, there are special circumstances when you may not be entitled to benefits. These circumstances are—

(a) *Waiver of benefits*. If you have waived benefits and been granted a tax exemption on religious grounds as described in §§ 404.1039 and 404.1075, no one may become entitled to any benefits or payments on your earnings record and

you may not be entitled to benefits on anyone else's earnings record; and

(b) *Person's death caused by an intentional act.* You may not become entitled to or continue to receive any survivor's benefits or payments on the earnings record of any person, or receive any underpayment due a person, if you were convicted of a felony or an act in the nature of a felony of intentionally causing that person's death. If you were subject to the juvenile justice system, you may not become entitled to or continue to receive survivor's benefits or payments on the earnings record of any person, or receive any underpayment due a person, if you were found by a court of competent jurisdiction to have intentionally caused that person's death by committing an act which, if committed by an adult, would have been considered a felony or an act in the nature of a felony.

[44 FR 34481, June 15, 1979, as amended at 47 FR 42098, Sept. 24, 1982; 52 FR 19136, May 21, 1987, 52 FR 21410, June 5, 1987; 58 FR 64888, Dec. 10, 1993]

OLD-AGE AND DISABILITY BENEFITS

§ 404.310 When am I entitled to old-age benefits?

We will find you entitled to old-age benefits if you meet the following three conditions:

(a) You are at least 62 years old;

(b) You have enough social security earnings to be fully insured as defined in §§ 404.110 through 404.115; and

(c) You apply; or you are entitled to disability benefits up to the month you attain full retirement age (as defined in § 404.409). When you attain full retirement age, your disability benefits automatically become old-age benefits.

[68 FR 4702, Jan. 30, 2003]

§ 404.311 When does my entitlement to old-age benefits begin and end?

(a) We will find you entitled to old-age benefits beginning with:

(1) If you have attained full retirement age (as defined in § 404.409), the first month covered by your application *in* which you meet all requirements for entitlement; or

(2) If you have attained age 62, but have not attained full retirement age (as defined in § 404.409), the first month covered by your application *throughout* which you meet all requirements for entitlement.

(b) We will find your entitlement to old-age benefits ends with the month before the month you die.

[68 FR 4702, Jan. 30, 2003]

§ 404.312 How is my old-age benefit amount calculated?

(a) If your old-age benefits begin in the month you attain full retirement age (as defined in § 404.409), your monthly benefit is equal to the primary insurance amount (as explained in subpart C of this part).

(b) If your old-age benefits begin after the month you attain full retirement age, your monthly benefit is your primary insurance amount plus an increase for retiring after full retirement age. See § 404.313 for a description of these increases.

(c) If your old-age benefits begin before the month you attain full retirement age, your monthly benefit amount is the primary insurance amount minus a reduction for each month you are entitled before you attain full retirement age. These reductions are described in §§ 404.410 through 404.413.

[68 FR 4702, Jan. 30, 2003]

§ 404.313 What are delayed retirement credits and how do they increase my old-age benefit amount?

(a) *What are delayed retirement credits and how do I earn them?* Delayed retirement credits (DRCs) are credits we use to increase the amount of your old-age benefit amount. You may earn a credit for each month during the period beginning with the month you attain full retirement age (as defined in § 404.409) and ending with the month you attain age 70 (72 before 1984). You earn a credit for each month for which you are fully insured and eligible but do not receive an old-age benefit either because you do not apply for benefits or because you elect to voluntarily suspend your benefits to earn DRCs. Even if you were entitled to old-age benefits before full retirement age you may still earn DRCs for months during the period from full retirement age to age 70, if you voluntarily elect to suspend

those benefits. If we have determined that you are entitled to benefits, you may voluntarily suspend benefits for any month beginning with the month after the month in which you voluntarily request that we suspend your benefits. If you apply for benefits, and we have not made a determination that you are entitled to benefits, you may voluntarily have your benefits suspended for any month for which you have not received a payment.

(b) *How is the amount of the increase because of delayed retirement credits computed?*—(1) *Computation of the increase amount.* The amount of the increase depends on your date of birth and the number of credits you earn. We total the number of credits (which need not be consecutive) and multiply that number by the applicable percentage from paragraph (b)(2) of this section. We then multiply the result by your benefit amount and round the answer to the next lower multiple of 10 cents (if the answer is not already a multiple of 10 cents). We add the result to your benefit amount. If a supplementary medical insurance premium is involved it is then deducted. The result is rounded to the next lower multiple of $1 (if the answer is not already a multiple of $1).

(2) *Credit percentages.* The applicable credit amount for each month of delayed retirement can be found in the table below.

If your date of birth is:	The credit for each month you delay retirement is:
Before 1/2/1917	1/12 of 1%
1/2/1917—1/1/1925	1/4 of 1%
1/2/1925—1/1/1927	7/24 of 1%
1/2/1927—1/1/1929	1/3 of 1%
1/2/1929—1/1/1931	3/8 of 1%
1/2/1931—1/1/1933	5/12 of 1%
1/2/1933—1/1/1935	11/24 of 1%
1/2/1935—1/1/1937	1/2 of 1%
1/2/1937—1/1/1939	13/24 of 1%
1/2/1939—1/1/1941	7/12 of 1%
1/2/1941—1/1/1943	5/8 of 1%
After 1/1/1943	2/3 of 1%

Example: Alan was qualified for old-age benefits when he reached age 65 on January 15, 1998. He decided not to apply for old-age benefits immediately because he was still working. When he became age 66 in January 1999, he stopped working and applied for benefits beginning with that month. Based on his earnings, his primary insurance amount was $782.60. However, because he did not receive benefits immediately upon attainment of full retirement age (65), he is due an increase based on his delayed retirement credits. He earned 12 credits, one for each month from January 1998 through December 1998. Based on his date of birth of 1/15/1933 he is entitled to a credit of 11/24 of one percent for each month of delayed retirement. 12 credits multiplied by 11/24 of one percent equals a credit of 5.5 percent. 5.5% of the primary insurance amount of $782.60 is $43.04 which is rounded to $43.00, the next lower multiple of 10 cents. $43.00 is added to the primary insurance amount, $782.60. The result, $825.60 is the monthly benefit amount. If a supplementary medical insurance premium is involved it is then deducted. The result is rounded to the next lower multiple of $1 (if the answer is not already a multiple of $1).

(c) *When is the increase because of delayed retirement credits effective?*—(1) *Credits earned after entitlement and before the year of attainment of age 70.* If you are entitled to benefits, we examine our records after the end of each calendar year to determine whether you have earned delayed retirement credits during the previous year for months when you were at or over full retirement age and you were fully insured and eligible for benefits but did not receive them. Any increase in your benefit amount is effective beginning with January of the year after the year the credits were earned.

(2) *Credits earned after entitlement in the year of attainment of age 70.* If you are entitled to benefits in the month you attain age 70, we examine our records to determine if you earned any additional delayed retirement credits during the calendar year in which you attained age 70. Any increase in your benefit amount is effective beginning with the month you attained age 70.

(3) *Credits earned prior to entitlement.* If you are full retirement age or older and eligible for old-age benefits but do not apply for benefits, your delayed retirement credits for months from the month of attainment of full retirement age through the end of the year prior to the year of filing will be included in the computation of your initial benefit amount. Credits earned in the year you attain age 70 will be added in the month you attain age 70.

(d) *How do delayed retirement credits affect the special minimum primary insurance amount?* We do not add delayed retirement credits to your old-age benefit if your benefit is based on the special minimum primary insurance amount described in § 404.260. We add the delayed retirement credits only to your old-age benefit based on your regular primary insurance amount, *i.e.* as computed under one of the other provisions of subpart C of this part. If your benefit based on the regular primary insurance amount plus your delayed retirement credits is higher than the benefit based on your special minimum primary insurance amount, we will pay the higher amount to you. However, if the special minimum primary insurance amount is higher than the regular primary insurance amount without the delayed retirement credits, we will use the special minimum primary insurance amount to determine the family maximum and the benefits of others entitled on your earnings record.

(e) *What is the effect of my delayed retirement credits on the benefit amount of others entitled on my earnings record?*—(1) *Surviving spouse or surviving divorced spouse.* If you earn delayed retirement credits during your lifetime, we will compute benefits for your surviving spouse or surviving divorced spouse based on your regular primary insurance amount plus the amount of those delayed retirement credits. All delayed retirement credits, including any earned during the year of death, can be used in computing the benefit amount for your surviving spouse or surviving divorced spouse beginning with the month of your death. We compute delayed retirement credits up to but not including the month of death.

(2) *Other family member.* We do not use your delayed retirement credits to increase the benefits of other family members entitled on your earnings record.

(3) *Family maximum.* We add delayed retirement credits to your benefit after we compute the family maximum. However, we add delayed retirement credits to your surviving spouse's or surviving divorced spouse's benefit before we reduce for the family maximum.

[68 FR 4703, Jan. 30, 2003, as amended at 75 FR 76259, Dec. 8, 2010]

§ 404.315 Who is entitled to disability benefits?

(a) *General.* You are entitled to disability benefits while disabled before attaining full retirement age as defined in § 404.409 if—

(1) You have enough social security earnings to be *insured for disability*, as described in § 404.130;

(2) You apply;

(3) You have a disability, as defined in § 404.1505, or you are not disabled, but you had a disability that ended within the 12-month period before the month you applied; and

(4) You have been disabled for 5 full consecutive months. This 5-month waiting period begins with a month in which you were both insured for disability and disabled. Your waiting period can begin no earlier than the 17th month before the month you apply—no matter how long you were disabled before then. No waiting period is required if you were previously entitled to disability benefits or to a period of disability under § 404.320 any time within 5 years of the month you again became disabled.

(b) *Prohibition against reentitlement to disability benefits if drug addiction or alcoholism is a contributing factor material to the determination of disability.* You cannot be entitled to a period of disability payments if drug addiction or alcoholism is a contributing factor material to the determination of disability and your earlier entitlement to disability benefits on the same basis terminated after you received benefits for 36 months during which treatment was available.

[44 FR 34481, June 15, 1979, as amended at 48 FR 21930, May 16, 1983; 51 FR 10616, Mar. 28, 1986; 51 FR 16166, May 1, 1986; 53 FR 43681, Oct. 28, 1988; 57 FR 30119, July 8, 1992; 60 FR 8145, Feb. 10, 1995; 68 FR 4704, Jan. 30, 2003]

§ 404.316 When entitlement to disability benefits begins and ends.

(a) You are entitled to disability benefits beginning with the first month covered by your application in which you meet all the other requirements

for entitlement. If a waiting period is required, your benefits cannot begin earlier than the first month following that period.

(b) Your entitlement to disability benefits ends with the earliest of these months:

(1) The month before the month of your death;

(2) The month before the month you attain full retirement age as defined in § 404.409 (at full retirement age your disability benefits will be automatically changed to old-age benefits);

(3) The second month after the month in which your disability ends as provided in § 404.1594(b)(1), unless continued subject to paragraph (c); or (4) subject to the provisions of paragraph (d) of this section, the month before your termination month (§ 404.325).

(c)(1) Your benefits, and those of your dependents, may be continued after your impairment is no longer disabling if—

(i) You are participating in an appropriate program of vocational rehabilitation services, employment services, or other support services, as described in § 404.327(a) and (b);

(ii) You began participating in the program before the date your disability ended; and

(iii) We have determined under § 404.328 that your completion of the program, or your continuation in the program for a specified period of time, will increase the likelihood that you will not have to return to the disability benefit rolls.

(2) We generally will stop your benefits with the earliest of these months—

(i) The month in which you complete the program; or

(ii) The month in which you stop participating in the program for any reason (see § 404.327(b) for what we mean by ''participating'' in the program); or

(iii) The month in which we determine under § 404.328 that your continuing participation in the program will no longer increase the likelihood that you will not have to return to the disability benefit rolls.

Exception to paragraph (c): In no case will we stop your benefits with a month earlier than the second month after the month your disability ends, provided that you meet all other requirements for entitlement to and payment of benefits through such month.

(d) If, after November 1980, you have a disabling impairment (§ 404.1511), you will be paid benefits for all months in which you do not do substantial gainful activity during the reentitlement period (§ 404.1592a) following the end of your trial work period (§ 404.1592). If you are unable to do substantial gainful activity in the first month following the reentitlement period, we will pay you benefits until you are able to do substantial gainful activity. (Earnings during your trial work period do not affect the payment of your benefit.) You will also be paid benefits for the first month after the trial work period in which you do substantial gainful activity and the two succeeding months, whether or not you do substantial gainful activity during those succeeding months. After those three months, you cannot be paid benefits for any months in which you do substantial gainful activity.

(e) If drug addiction or alcoholism is a contributing factor material to the determination of disability as described in § 404.1535, you may receive disability benefits on that basis for no more than 36 months regardless of the number of entitlement periods you may have. Not included in these 36 months are months in which treatment for your drug addiction or alcoholism is not available, months before March 1995, and months for which your benefit payments were suspended for any reason. Benefits to your dependents may continue after the 36 months of benefits if, but for the operation of this paragraph, you would otherwise be entitled to benefits based on disability. The 36-month limit is no longer effective for benefits for months beginning after September 2004.

(f) If drug addiction or alcoholism is a contributing factor material to the determination of disability as described in § 404.1535 and your disability benefits are suspended for 12 consecutive months because of your failure to comply with treatment requirements, your disability benefits will be terminated effective the first month after such 12-month period. Benefits to your dependents may continue after the 12-month period if, but for the operation

of this paragraph, you would otherwise be entitled to benefits based on disability.

[44 FR 34481, June 15, 1979, as amended at 47 FR 31542, July 21, 1982; 47 FR 52693, Nov. 23, 1982; 49 FR 22270, May 29, 1984; 51 FR 17617, May 14, 1986; 60 FR 8145, Feb. 10, 1995; 68 FR 4704, Jan. 30, 2003; 70 FR 36505, June 24, 2005]

§ 404.317 How is the amount of my disability benefit calculated?

Your monthly benefit is equal to the primary insurance amount (PIA). This amount is computed under the rules in subpart C of this part as if it was an old-age benefit, and as if you were 62 years of age at the beginning of the 5-month waiting period mentioned in § 404.315(a). If the 5-month waiting period is not required because of your previous entitlement, your PIA is figured as if you were 62 years old when you become entitled to benefits this time. Your monthly benefit amount may be reduced if you receive worker's compensation or public disability payments before you become 65 years old as described in § 404.408. Your benefits may also be reduced if you were entitled to other retirement-age benefits before you attained full retirement age (as defined in § 404.409).

[68 FR 4704, Jan. 30, 2003]

§ 404.320 Who is entitled to a period of disability.

(a) *General.* A period of disability is a continuous period of time during which you are disabled. If you become disabled, you may apply to have our records show how long your disability lasts. You may do this even if you do not qualify for disability benefits. If we establish a period of disability for you, the months in that period of time will not be counted in figuring your average earnings. If benefits payable on your earnings record would be denied or reduced because of a period of disability, the period of disability will not be taken into consideration.

(b) *Who is entitled.* You are entitled to a period of disability if you meet all the following conditions:

(1) You have or had a disability as defined in § 404.1505.

(2) You are *insured for disability*, as defined in § 404.130 in the calendar quarter in which you became disabled, or in a later calendar quarter in which you were disabled.

(3) You file an application while disabled, or no later than 12 months after the month in which your period of disability ended. If you were unable to apply within the 12-month period after your period of disability ended because of a physical or mental condition as described in § 404.322, you may apply not more than 36 months after the month your disability ended.

(4) At least 5 consecutive months go by from the month in which your period of disability begins and before the month in which it would end.

[44 FR 34481, June 15, 1979, as amended at 48 FR 21930, May 16, 1983; 51 FR 10616, Mar. 28, 1986]

§ 404.321 When a period of disability begins and ends.

(a) *When a period of disability begins.* Your period of disability begins on the day your disability begins if you are insured for disability on that day. If you are not insured for disability on that day, your period of disability will begin on the first day of the first calendar quarter after your disability began in which you become insured for disability. Your period of disability may not begin after you have attained full retirement age as defined in § 404.409.

(b) *When disability ended before December 1, 1980.* Your period of disability ends on the last day of the month before the month in which you become 65 years old or, if earlier, the last day of the second month following the month in which your disability ended.

(c) *When disability ends after November 1980.* Your period of disability ends with the close of whichever of the following is the earliest—

(1) The month before the month in which you attain full retirement age as defined in § 404.409.

(2) The month immediately preceding your termination month (§ 404.325); or

(3) If you perform substantial gainful activity during the reentitlement period described in § 404.1592a, the last month for which you received benefits.

(d) *When drug addiction or alcoholism is a contributing factor material to the determination of disability.* (1) Your entitlement to receive disability benefit payments ends the month following the

month in which, regardless of the number of entitlement periods you may have had based on disability where drug addiction or alcoholism is a contributing factor material to the determination of disability (as described in § 404.1535)—

(i) You have received a total of 36 months of disability benefits. Not included in these 36 months are months in which treatment for your drug addiction or alcoholism is not available, months before March 1995, and months for which your benefits were suspended for any reason; or

(ii) Your benefits have been suspended for 12 consecutive months because of your failure to comply with treatment requirements.

(2) For purposes other than payment of your disability benefits, your period of disability continues until the termination month as explained in § 404.325.

[49 FR 22271, May 29, 1984, as amended at 60 FR 8145, Feb. 10, 1995; 65 FR 42782, July 11, 2000; 68 FR 4704, Jan. 30, 2003]

§ 404.322 When you may apply for a period of disability after a delay due to a physical or mental condition.

If because of a physical or mental condition you did not apply for a period of disability within 12 months after your period of disability ended, you may apply not more than 36 months after the month in which your disability ended. Your failure to apply within the 12-month time period will be considered due to a physical or mental condition if during this time—

(a) Your physical condition limited your activities to such an extent that you could not complete and sign an application; or

(b) You were mentally incompetent.

§ 404.325 The termination month.

If you do not have a disabling impairment, your termination month is the third month following the month in which your impairment is not disabling even if it occurs during the trial work period or the reentitlement period. If you continue to have a disabling impairment and complete 9 months of trial work, your termination month will be the third month following the earliest month you perform substantial gainful activity or are determined able to perform substantial gainful activity; however, in no event will the termination month under these circumstances be earlier than the first month after the end of the reentitlement period described in § 404.1592a.

Example 1: You complete your trial work period in December 1999. You then work at the substantial gainful activity level and continue to do so throughout the 36 months following completion of your trial work period and thereafter. Your termination month will be January 2003, which is the first month in which you performed substantial gainful activity after the end of your 36-month reentitlement period. This is because, for individuals who have disabling impairments (see § 404.1511) and who work, the termination month cannot occur before the first month after the end of the 36-month reentitlement period.

Example 2: You complete your trial work period in December 1999, but you do not do work showing your ability to do substantial gainful activity during your trial work period or throughout your 36-month reentitlement period. In April 2003, 4 months after your reentitlement period ends, you become employed at work that we determine is substantial gainful activity, considering all of our rules in §§ 404.1574 and 404.1574a. Your termination month will be July 2003; that is, the third month after the earliest month you performed substantial gainful activity.

[65 FR 42782, July 11, 2000]

RULES RELATING TO CONTINUATION OF BENEFITS AFTER YOUR IMPAIRMENT IS NO LONGER DISABLING

SOURCE: 70 FR 36505, June 24, 2005, unless otherwise noted.

§ 404.327 When you are participating in an appropriate program of vocational rehabilitation services, employment services, or other support services.

(a) *What is an appropriate program of vocational rehabilitation services, employment services, or other support services?* An appropriate program of vocational rehabilitation services, employment services, or other support services means—

(1) A program that is carried out under an individual work plan with an employment network under the Ticket to Work and Self-Sufficiency Program under part 411 of this chapter;

(2) A program that is carried out under an individualized plan for employment with—

(i) A State vocational rehabilitation agency (*i.e.*, a State agency administering or supervising the administration of a State plan approved under title I of the Rehabilitation Act of 1973, as amended (29 U.S.C. 720–751) under 34 CFR part 361; or

(ii) An organization administering a Vocational Rehabilitation Services Project for American Indians with Disabilities authorized under section 121 of part C of title I of the Rehabilitation Act of 1973, as amended (29 U.S.C. 741);

(3) A program of vocational rehabilitation services, employment services, or other support services that is carried out under a similar, individualized written employment plan with—

(i) An agency of the Federal Government (for example, the Department of Veterans Affairs);

(ii) A one-stop delivery system or specialized one-stop center described in section 134(c) of the Workforce Investment Act of 1998 (29 U.S.C. 2864(c)); or

(iii) Another provider of services approved by us; providers we may approve include, but are not limited to—

(A) A public or private organization with expertise in the delivery or coordination of vocational rehabilitation services, employment services, or other support services; or

(B) A public, private or parochial school that provides or coordinates a program of vocational rehabilitation services, employment services, or other support services carried out under an individualized program or plan;

(4) An individualized education program developed under policies and procedures approved by the Secretary of Education for assistance to States for the education of individuals with disabilities under the Individuals with Disabilities Education Act, as amended (20 U.S.C. 1400 *et seq.*); you must be age 18 through age 21 for this provision to apply.

(b) *When are you participating in the program?* (1) You are participating in a program described in paragraph (a)(1), (a)(2), or (a)(3) of this section when you are taking part in the activities and services outlined in your individual work plan, your individualized plan for employment, or your similar individualized written employment plan, as appropriate.

(2) If you are a student age 18 through 21 receiving services under an individualized education program described in paragraph (a)(4) of this section, you are participating in your program when you are taking part in the activities and services outlined in your program or plan.

(3) You are participating in your program under paragraph (b)(1) or (2) of this section during temporary interruptions in your program. For an interruption to be considered temporary, you must resume taking part in the activities and services outlined in your plan or program, as appropriate, no more than three months after the month the interruption occurred.

§ 404.328 When your completion of the program, or your continuation in the program for a specified period of time, will increase the likelihood that you will not have to return to the disability benefit rolls.

(a) We will determine that your completion of the program, or your continuation in the program for a specified period of time, will increase the likelihood that you will not have to return to the disability benefit rolls if your completion of or your continuation in the program will provide you with—

(1) Work experience (see § 404.1565) so that you would more likely be able to do past relevant work (see § 404.1560(b)), despite a possible future reduction in your residual functional capacity (see § 404.1545); or

(2) Education (see § 404.1564) and/or skilled or semi-skilled work experience (see § 404.1568) so that you would more likely be able to adjust to other work that exists in the national economy (see § 404.1560(c)), despite a possible future reduction in your residual functional capacity (see § 404.1545).

(b) If you are a student age 18 through age 21 participating in an individualized education program described in § 404.327(a)(4), we will find that your completion of or continuation in the program will increase the likelihood that you will not have to return to the disability benefit rolls.

(c) If you are receiving transition services after having completed an individualized education program as described in paragraph (b) of this section, we will determine that the transition services will increase the likelihood that you will not have to return to the disability benefit rolls if they meet the requirements in § 404.328(a).

BENEFITS FOR SPOUSES AND DIVORCED SPOUSES

§ 404.330 Who is entitled to wife's or husband's benefits.

You are entitled to benefits as the wife or husband of an insured person who is entitled to old-age or disability benefits if—

(a) You are the insured's wife or husband based upon a relationship described in §§ 404.345 through 404.346 and one of the following conditions is met:

(1) Your relationship to the insured as a wife or husband has lasted at least 1 year. (You will be considered to meet the 1-year duration requirement throughout the month in which the first anniversary of the marriage occurs.)

(2) You and the insured are the natural parents of a child; or

(3) In the month before you married the insured you were entitled to, or if you had applied and been old enough you could have been entitled to, any of these benefits or payments: Wife's, husband's, widow's, widower's, or parent's benefits; disabled child's benefits; or annuity payments under the Railroad Retirement Act for widows, widowers, parents, or children 18 years old or older;

(b) You apply;

(c) You are age 62 or older throughout a month and you meet all other conditions of entitlement, or you are the insured's wife or husband and have *in your care* (as defined in §§ 404.348 through 404.349), throughout a month in which all other conditions of entitlement are met, a child who is entitled to child's benefits on the insured's earnings record and the child is either under age 16 or disabled; and

(d) You are not entitled to an old-age or disability benefit based upon a primary insurance amount that is equal to or larger than the full wife's or husband's benefit.

[44 FR 34481, June 15, 1979; 44 FR 56691, Oct. 2, 1979, as amended at 45 FR 68932, Oct. 17, 1980; 48 FR 21926, May 16, 1983]

§ 404.331 Who is entitled to wife's or husband's benefits as a divorced spouse.

You are entitled to wife's or husband's benefits as the divorced wife or divorced husband of an insured person who is entitled to old-age or disability benefits if you meet the requirements of paragraphs (a) through (e). You are entitled to these benefits even though the insured person is not yet entitled to benefits, if the insured person is at least age 62 and if you meet the requirements of paragraphs (a) through (f). The requirements are that—

(a) You are the insured's divorced wife or divorced husband and—

(1) You were validly married to the insured under State law as described in § 404.345 or you were deemed to be validly married as described in § 404.346; and

(2) You were married to the insured for at least 10 years immediately before your divorce became final;

(b) You apply;

(c) You are not married. (For purposes of meeting this requirement, you will be considered not to be married throughout the month in which the divorce occurred);

(d) You are age 62 or older throughout a month in which all other conditions of entitlement are met; and

(e) You are not entitled to an old-age or disability benefit based upon a primary insurance amount that is equal to or larger than the full wife's or husband's benefit.

(f) You have been divorced from the insured person for at least 2 years.

[44 FR 34481, June 15, 1979, as amended at 48 FR 21926, May 16, 1983; 51 FR 11911, Apr. 8, 1986; 58 FR 64891, Dec. 10, 1993]

§ 404.332 When wife's and husband's benefits begin and end.

(a) You are entitled to wife's or husband's benefits beginning with the first month covered by your application in which you meet all the other requirements for entitlement under § 404.330 or § 404.331. However, if you are entitled as

a divorced spouse before the insured person becomes entitled, your benefits cannot begin before January 1985 based on an application filed no earlier than that month.

(b) Your entitlement to benefits ends with the month before the month in which one of the following events first occurs:

(1) You become entitled to an old-age or disability benefit based upon a primary insurance amount that is equal to or larger than the full wife's or husband's benefit.

(2) You are the wife or husband and are divorced from the insured person unless you meet the requirements for benefits as a divorced wife or divorced husband as described in § 404.331.

(3) You are the divorced wife or divorced husband and you marry someone, other than the insured who is entitled to old-age benefits, unless that other person is someone entitled to benefits as a wife, husband, widow, widower, father, mother, parent or disabled child. Your benefits will end if you remarry the insured who is not yet entitled to old-age benefits.

(4) If you are under age 62, there is no longer a child of the insured who is under age 16 or disabled and entitled to child's benefits on the insured's earnings record. (See paragraph (c) of this section if you were entitled to wife's or husband's benefits for August 1981 on the basis of having a child in care.) (If you no longer have in your care a child who is under age 16 or disabled and entitled to child's benefits on the insured's earnings record, your benefits may be subject to deductions as provided in § 404.421.)

(5) The insured person dies or is no longer entitled to old age or disability benefits. Exception: Your benefits will continue if the insured person was entitled to disability benefits based on a finding that drug addiction or alcoholism was a contributing factor material to the determination of his or her disability (as described in § 404.1535), the insured person's benefits ended after 36 months of benefits (see § 404.316(e)) or 12 consecutive months of suspension for noncompliance with treatment (see § 404.316(f)), and but for the operation of these provisions, the insured person would remain entitled to benefits based on disability.

(6) If your benefits are based upon a deemed valid marriage and you have not divorced the insured, you marry someone other than the insured.

(7) You die.

(8) You became entitled as the divorced wife or the divorced husband before the insured person became entitled, but he or she is no longer insured.

(c) If you were entitled to wife's or husband's benefits for August 1981 on the basis of having a child in care, your entitlement will continue until September 1983, until the child reaches 18 (unless disabled) or is otherwise no longer entitled to child's benefits, or until one of the events described in paragraph (b) (1), (2), (3), (5), (6) or (7) of this section occurs, whichever is earliest.

[44 FR 34481, June 15, 1979, as amended at 48 FR 21926, May 16, 1983; 49 FR 24115, June 12, 1984; 51 FR 11911, Apr. 8, 1986; 58 FR 64891, Dec. 10, 1993; 60 FR 8145, Feb. 10, 1995; 64 FR 14608, Mar. 26, 1999]

§ 404.333 Wife's and husband's benefit amounts.

Your wife's or husband's monthly benefit is equal to one-half the insured person's primary insurance amount. If you are entitled as a divorced wife or as a divorced husband before the insured person becomes entitled, we will compute the primary insurance amount as if he or she became entitled to old-age benefits in the first month you are entitled as a divorced wife or as a divorced husband. The amount of your monthly benefit may change as explained in § 404.304.

[51 FR 11912, Apr. 8, 1986]

§ 404.335 How do I become entitled to widow's or widower's benefits?

We will find you entitled to benefits as the widow or widower of a person who died fully insured if you meet the requirements in paragraphs (a) through (e) of this section:

(a) You are the insured's widow or widower based upon a relationship described in §§ 404.345 through 404.346, and you meet one of the conditions in paragraphs (a)(1) through (4) of this section:

(1) Your relationship to the insured as a wife or husband lasted for at least

9 months immediately before the insured died.

(2) Your relationship to the insured as a wife or husband did not last 9 months before the insured died, but you meet one of the conditions in paragraphs (a)(2)(i) through (iv) of this section.

(i) At the time of your marriage the insured was reasonably expected to live for 9 months, and the death of the insured was accidental. The death is accidental if it was caused by an event that the insured did not expect, if it was the result of bodily injuries received from violent and external causes, and if, as a direct result of these injuries, death occurred not later than 3 months after the day on which the bodily injuries were received. An intentional and voluntary suicide will not be considered an accidental death.

(ii) At the time of your marriage the insured was reasonably expected to live for 9 months, and the death of the insured occurred in the line of duty while he or she was serving on active duty as a member of the uniformed services as defined in § 404.1019.

(iii) At the time of your marriage the insured was reasonably expected to live for 9 months, and you had been previously married to the insured for at least 9 months.

(iv) The insured had been married prior to his or her marriage to you and the prior spouse was institutionalized during the marriage to the insured due to mental incompetence or similar incapacity. During the period of the prior spouse's institutionalization, the insured, as determined based on evidence satisfactory to the Agency, would have divorced the prior spouse and married you, but the insured did not do so because the divorce would have been unlawful, by reason of the institutionalization, under the laws of the State in which the insured was domiciled at the time. Additionally, the prior spouse must have remained institutionalized up to the time of his or her death and the insured must have married you within 60 days after the prior spouse's death.

(3) You and the insured were the natural parents of a child; or you were married to the insured when either of you adopted the other's child or when both of you adopted a child who was then under 18 years old.

(4) In the month before you married the insured, you were entitled to or, if you had applied and had been old enough, could have been entitled to any of these benefits or payments: widow's, widower's, father's (based on the record of a fully insured individual), mother's (based on the record of a fully insured individual), wife's, husband's, parent's, or disabled child's benefits; or annuity payments under the Railroad Retirement Act for widows, widowers, parents, or children age 18 or older.

(b) You apply, except that you need not apply again if you meet one of the conditions in paragraphs (b)(1) through (4) of this section:

(1) You are entitled to wife's or husband's benefits for the month before the month in which the insured dies and you have attained full retirement age (as defined in § 404.409) or you are not entitled to either old-age or disability benefits.

(2) You are entitled to mother's or father's benefits for the month before the month in which you attained full retirement age (as defined in § 404.409).

(3) You are entitled to wife's or husband's benefits and to either old-age or disability benefits in the month before the month of the insured's death, you are under full retirement age (as defined in § 404.409) in the month of death, and you have filed a Certificate of Election in which you elect to receive reduced widow's or widower's benefits.

(4) You applied in 1990 for widow's or widower's benefits based on disability and you meet both of the conditions in paragraphs (b)(4)(i) and (ii) of this section:

(i) You were entitled to disability insurance benefits for December 1990, or eligible for supplemental security income or federally administered State supplementary payments, as specified in subparts B and T of part 416 of this chapter, respectively, for January 1991.

(ii) You were found not disabled for any month based on the definition of disability in §§ 404.1577 and 404.1578, as in effect prior to January 1991, but would have been entitled if the standard in § 404.1505(a) had applied. (This exception to the requirement for filing an

application is effective only with respect to benefits payable for months after December 1990.)

(c) You are at least 60 years old; or you are at least 50 years old and have a disability as defined in § 404.1505 and you meet all of the conditions in paragraphs (c)(1) through (4) of this section:

(1) Your disability started not later than 7 years after the insured died or 7 years after you were last entitled to mother's or father's benefits or to widow's or widower's benefits based upon a disability, whichever occurred last.

(2) Your disability continued during a waiting period of 5 full consecutive months, unless months beginning with the first month of eligibility for supplemental security income or federally administered State supplementary payments are counted, as explained in the Exception in paragraph (c)(3) of this section. The waiting period may begin no earlier than the 17th month before you applied; the fifth month before the insured died; or if you were previously entitled to mother's, father's, widow's, or widower's benefits, the 5th month before your entitlement to benefits ended. If you were previously entitled to widow's or widower's benefits based upon a disability, no waiting period is required.

(3) Exception: For monthly benefits payable for months after December 1990, if you were or have been eligible for supplemental security income or federally administered State supplementary payments, as specified in subparts B and T of part 416 of this chapter, respectively, your disability need not have continued through a separate, full 5-month waiting period before you may begin receiving benefits. We will include as months of the 5-month waiting period the months in a period beginning with the first month you received supplemental security income or a federally administered State supplementary payment and continuing through all succeeding months, regardless of whether the months in the period coincide with the months in which your waiting period would have occurred, or whether you continued to be eligible for supplemental security income or a federally administered State supplementary payment after the period began, or whether you met the nondisability requirements for entitlement to widow's or widower's benefits. However, we will not pay you benefits under this provision for any month prior to January 1991.

(4) You have not previously received 36 months of payments based on disability when drug addiction or alcoholism was a contributing factor material to the determination of disability (as described in § 404.1535), regardless of the number of entitlement periods you may have had, or your current application for widow's or widower's benefits is not based on a disability where drug addiction or alcoholism is a contributing factor material to the determination of disability.

(d) You are not entitled to an old-age benefit that is equal to or larger than the insured person's primary insurance amount.

(e) You are unmarried, unless for benefits for months after 1983 you meet one of the conditions in paragraphs (e)(1) through (3) of this section:

(1) You remarried after you became 60 years old.

(2) You are now age 60 or older and you meet both of the conditions in paragraphs (e)(2)(i) and (ii) of this section:

(i) You remarried after attaining age 50 but before attaining age 60.

(ii) At the time of the remarriage, you were entitled to widow's or widower's benefits as a disabled widow or widower.

(3) You are now at least age 50, but not yet age 60 and you meet both of the conditions in paragraphs (e)(3)(i) and (ii) of this section:

(i) You remarried after attaining age 50.

(ii) You met the disability requirements in paragraph (c) of this section at the time of your remarriage (*i.e.*, your disability began within the specified time and before your remarriage).

[68 FR 4704, Jan. 30, 2003, as amended at 70 FR 61365, Oct. 24, 2005]

§ 404.336 How do I become entitled to widow's or widower's benefits as a surviving divorced spouse?

We will find you entitled to widow's or widower's benefits as the surviving divorced wife or the surviving divorced

husband of a person who died fully insured if you meet the requirements in paragraphs (a) through (e) of this section:

(a) You are the insured's surviving divorced wife or surviving divorced husband and you meet both of the conditions in paragraphs (a)(1) and (2) of this section:

(1) You were validly married to the insured under State law as described in § 404.345 or are deemed to have been validly married as described in § 404.346.

(2) You were married to the insured for at least 10 years immediately before your divorce became final.

(b) You apply, except that you need not apply again if you meet one of the conditions in paragraphs (b)(1) through (4) of this section:

(1) You are entitled to wife's or husband's benefits for the month before the month in which the insured dies and you have attained full retirement age (as defined in § 404.409) or you are not entitled to old-age or disability benefits.

(2) You are entitled to mother's or father's benefits for the month before the month in which you attain full retirement age (as defined in § 404.409).

(3) You are entitled to wife's or husband's benefits and to either old-age or disability benefits in the month before the month of the insured's death, you have not attained full retirement age (as defined in § 404.409) in the month of death, and you have filed a Certificate of Election in which you elect to receive reduced widow's or widower's benefits.

(4) You applied in 1990 for widow's or widower's benefits based on disability, and you meet the requirements in both paragraphs (b)(4)(i) and (ii) of this section:

(i) You were entitled to disability insurance benefits for December 1990 or eligible for supplemental security income or federally administered State supplementary payments, as specified in subparts B and T of part 416 of this chapter, respectively, for January 1991.

(ii) You were found not disabled for any month based on the definition of disability in §§ 404.1577 and 404.1578, as in effect prior to January 1991, but would have been entitled if the standard in § 404.1505(a) had applied. (This exception to the requirement for filing an application is effective only with respect to benefits payable for months after December 1990.)

(c) You are at least 60 years old; or you are at least 50 years old and have a disability as defined in § 404.1505 and you meet all of the conditions in paragraphs (c)(1) through (4) of this section:

(1) Your disability started not later than 7 years after the insured died or 7 years after you were last entitled to mother's or father's benefits or to widow's or widower's benefits based upon a disability, whichever occurred last.

(2) Your disability continued during a waiting period of 5 full consecutive months, unless months beginning with the first month of eligibility for supplemental security income or federally administered State supplementary payments are counted, as explained in the Exception in paragraph (c)(3) of this section. This waiting period may begin no earlier than the 17th month before you applied; the fifth month before the insured died; or if you were previously entitled to mother's, father's, widow's, or widower's benefits, the 5th month before your previous entitlement to benefits ended. If you were previously entitled to widow's or widower's benefits based upon a disability, no waiting period is required.

(3) Exception: For monthly benefits payable for months after December 1990, if you were or have been eligible for supplemental security income or federally administered State supplementary payments, as specified in subparts B and T of part 416 of this chapter, respectively, your disability does not have to have continued through a separate, full 5-month waiting period before you may begin receiving benefits. We will include as months of the 5-month waiting period the months in a period beginning with the first month you received supplemental security income or a federally administered State supplementary payment and continuing through all succeeding months, regardless of whether the months in the period coincide with the months in which your waiting period would have occurred, or whether you continued to be eligible for supplemental security income or a federally administered State supplementary payment after

the period began, or whether you met the nondisability requirements for entitlement to widow's or widower's benefits. However, we will not pay you benefits under this provision for any month prior to January 1991.

(4) You have not previously received 36 months of payments based on disability when drug addiction or alcoholism was a contributing factor material to the determination of disability (as described in § 404.1535), regardless of the number of entitlement periods you may have had, or your current application for widow's or widower's benefits is not based on a disability where drug addiction or alcoholism is a contributing factor material to the determination of disability.

(d) You are not entitled to an old-age benefit that is equal to or larger than the insured person's primary insurance amount.

(e) You are unmarried, unless for benefits for months after 1983 you meet one of the conditions in paragraphs (e)(1) through (3) of this section:

(1) You remarried after you became 60 years old.

(2) You are now age 60 or older and you meet both of the conditions in paragraphs (e)(2)(i) and (ii) of this section:

(i) You remarried after attaining age 50 but before attaining age 60.

(ii) At the time of the remarriage, you were entitled to widow's or widower's benefits as a disabled widow or widower.

(3) You are now at least age 50 but not yet age 60 and you meet both of the conditions in paragraphs (e)(3)(i) and (ii) of this section:

(i) You remarried after attaining age 50.

(ii) You met the disability requirements in paragraph (c) of this section at the time of your remarriage (*i.e.*, your disability began within the specified time and before your remarriage).

[68 FR 4705, Jan. 30, 2003, as amended at 71 FR 24814, Apr. 27, 2006]

§ 404.337 When does my entitlement to widow's and widower's benefits start and end?

(a) We will find you entitled to widow's or widower's benefits under § 404.335 or § 404.336 beginning with the first month covered by your application in which you meet all other requirements for entitlement.

(b) We will end your entitlement to widow's or widower's benefits at the earliest of the following times:

(1) The month before the month in which you become entitled to an old-age benefit that is equal to or larger than the insured's primary insurance amount.

(2) The second month after the month your disability ends or, where disability ends on or after December 1, 1980, the month before your termination month (§ 404.325). However your payments are subject to the provisions of paragraphs (c) and (d) of this section.

NOTE: You may remain eligible for payment of benefits if you attained full retirement age (as defined in § 404.409) before your termination month and you meet the other requirements for widow's or widower's benefits.

(3) If drug addiction or alcoholism is a contributing factor material to the determination of disability as described in § 404.1535, the month after the 12th consecutive month of suspension for noncompliance with treatment or after 36 months of benefits on that basis when treatment is available regardless of the number of entitlement periods you may have had, unless you are otherwise disabled without regard to drug addiction or alcoholism.

(4) The month before the month in which you die.

(c)(1) Your benefits may be continued after your impairment is no longer disabling if—

(i) You are participating in an appropriate program of vocational rehabilitation services, employment services, or other support services, as described in § 404.327(a) and (b);

(ii) You began participating in the program before the date your disability ended; and

(iii) We have determined under § 404.328 that your completion of the program, or your continuation in the program for a specified period of time, will increase the likelihood that you will not have to return to the disability benefit rolls.

(2) We generally will stop your benefits with the earliest of these months—

(i) The month in which you complete the program; or

(ii) The month in which you stop participating in the program for any reason (see § 404.327(b) for what we mean by ''participating'' in the program); or

(iii) The month in which we determine under § 404.328 that your continuing participation in the program will no longer increase the likelihood that you will not have to return to the disability benefit rolls.

Exception to paragraph (c): In no case will we stop your benefits with a month earlier than the second month after the month your disability ends, provided that you meet all other requirements for entitlement to and payment of benefits through such month.

(d) If, after November 1980, you have a disabling impairment (§ 404.1511), we will pay you benefits for all months in which you do not do substantial gainful activity during the reentitlement period (§ 404.1592a) following the end of your trial work period (§ 404.1592). If you are unable to do substantial gainful activity in the first month following the reentitlement period, we will pay you benefits until you are able to do substantial gainful activity. (Earnings during your trial work period do not affect the payment of your benefits.) We will also pay you benefits for the first month after the trial work period in which you do substantial gainful activity and the two succeeding months, whether or not you do substantial gainful activity during those succeeding months. After those three months, we cannot pay you benefits for any months in which you do substantial gainful activity.

[68 FR 4706, Jan. 30, 2003, as amended at 70 FR 36506, June 24, 2005]

§ 404.338 Widow's and widower's benefits amounts.

(a) Your monthly benefit is equal to the insured person's primary insurance amount. If the insured person dies before reaching age 62 and you are first eligible after 1984, we may compute a special primary insurance amount to determine the amount of the monthly benefit (see § 404.212(b)).

(b) We may increase your monthly benefit amount if the insured person delays filing for benefits or requests voluntary suspension of benefits, and thereby earns delayed retirement credit (see § 404.313), and/or works before the year 2000 after reaching full retirement age (as defined in § 404.409(a)). The amount of your monthly benefit may change as explained in § 404.304.

(c) Your monthly benefit will be reduced if the insured person chooses to receive old-age benefits before reaching full retirement age. If so, your benefit will be reduced to the amount the insured person would be receiving if alive, or 82½ percent of his or her primary insurance amount, whichever is larger.

[70 FR 28811, May 19, 2005]

§ 404.339 How do I become entitled to mother's or father's benefits as a surviving spouse?

You may be entitled as the widow or widower to mother's or father's benefits on the earnings record of someone who was fully or currently insured when he or she died. You are entitled to these benefits if—

(a) You are the widow or widower of the insured and meet the conditions described in § 404.335(a);

(b) You apply for these benefits; or you were entitled to wife's benefits for the month before the insured died;

(c) You are unmarried;

(d) You are not entitled to widow's or widower's benefits, or to an old-age benefit that is equal to or larger than the full mother's or father's benefit; and

(e) You have *in your care* the insured's child who is entitled to child's benefits and he or she is under 16 years old or is disabled. Sections 404.348 and 404.349 describe when a child is *in your care*.

[44 FR 34481, June 15, 1979, as amended at 48 FR 21927, May 16, 1983; 73 FR 40967, July 17, 2008]

§ 404.340 How do I become entitled to mother's or father's benefits as a surviving divorced spouse?

You may be entitled to mother's or father's benefits as the surviving divorced wife or the surviving divorced husband on the earnings record of someone who was fully or currently insured when she or he died. You are entitled to these benefits if—

(a) You were validly married to the insured under State law as described in § 404.345 or you were deemed to be validly married as described in § 404.346 but the marriage ended in a final divorce and—

(1) You are the mother or father of the insured's child; or

(2) You were married to the insured when either of you adopted the other's child or when both of you adopted a child and the child was then under 18 years old;

(b) You apply for these benefits; or you were entitled to wife's or husband's benefits for the month before the insured died;

(c) You are unmarried;

(d) You are not entitled to widow's or widower's benefits, or to an old-age benefit that is equal to or larger than the full mother's or father's benefit; and

(e) You have *in your care* the insured's child who is under age 16 or disabled, is your natural or adopted child, and is entitled to child's benefits on the insured person's record. Sections 404.348 and 404.349 describe when a child is *in your care*.

[44 FR 34481, June 15, 1979, as amended at 45 FR 68932, Oct. 17, 1980; 48 FR 21927, May 16, 1983; 58 FR 64891, Dec. 10, 1993; 73 FR 40967, July 17, 2008]

§ 404.341 When mother's and father's benefits begin and end.

(a) You are entitled to mother's or father's benefits beginning with the first month covered by your application in which you meet all the other requirements for entitlement.

(b) Your entitlement to benefits ends with the month before the month in which one of the following events first occurs:

(1) You become entitled to a widow's or widower's benefit or to an old-age benefit that is equal to or larger than the full mother's or father's benefit.

(2) There is no longer a child of the insured who is under age 16 or disabled and entitled to a child's benefit on the insured's earnings record. (See paragraph (c) of this section if you were entitled to mother's or father's benefits for August 1981.) (If you no longer have in your care a child who is under age 16 or disabled and entitled to child's benefits on the insured's earnings record, your benefits may be subject to deductions as provided in § 404.421.)

(3) You remarry. Your benefits will not end, however, if you marry someone entitled to old-age, disability, wife's, husband's, widow's, widower's, father's, mother's, parent's or disabled child's benefits.

(4) You die.

(c) If you were entitled to spouse's benefits on the basis of having a child in care, or to mother's or father's benefits for August 1981, your entitlement will continue until September 1983, until the child reaches 18 (unless disabled) or is otherwise no longer entitled to child's benefits, or until one of the events described in paragraph (b)(1), (3), or (4) of this section occurs, whichever is earliest.

[44 FR 34481, June 15, 1979, as amended at 48 FR 21927, May 16, 1983; 49 FR 24115, June 12, 1984; 58 FR 64891, Dec. 10, 1993; 64 FR 14608, Mar. 26, 1999]

§ 404.342 Mother's and father's benefit amounts.

Your mother's or father's monthly benefit is equal to 75 percent of the insured person's primary insurance amount. The amount of your monthly benefit may change as explained in § 404.304.

§ 404.344 Your relationship by marriage to the insured.

You may be eligible for benefits if you are related to the insured person as a wife, husband, widow, or widower. To decide your relationship to the insured, we look first to State laws. The State laws that we use are discussed in § 404.345. If your relationship cannot be established under State law, you may still be eligible for benefits if your relationship as the insured's wife, husband, widow, or widower is based upon a *deemed valid marriage* as described in § 404.346.

§ 404.345 Your relationship as wife, husband, widow, or widower under State law.

To decide your relationship as the insured's wife or husband, we look to the laws of the State where the insured had a permanent home when you applied

for wife's or husband's benefits. To decide your relationship as the insured's widow or widower, we look to the laws of the State where the insured had a permanent home when he or she died. If the insured's permanent home is not or was not in one of the 50 States, the Commonwealth of Puerto Rico, the Virgin Islands, Guam, or American Samoa, we look to the laws of the District of Columbia. For a definition of permanent home, see § 404.303. If you and the insured were validly married under State law at the time you apply for wife's or husband's benefits or at the time the insured died if you apply for widow's, widower's, mother's, or father's benefits, the relationship requirement will be met. The relationship requirement will also be met if under State law you would be able to inherit a wife's, husband's, widow's, or widower's share of the insured's personal property if he or she were to die without leaving a will.

§ 404.346 Your relationship as wife, husband, widow, or widower based upon a deemed valid marriage.

(a) *General.* If your relationship as the insured's wife, husband, widow, or widower cannot be established under State law as explained in § 404.345, you may be eligible for benefits based upon a deemed valid marriage. You will be deemed to be the wife, husband, widow, or widower of the insured if, in good faith, you went through a marriage ceremony with the insured that would have resulted in a valid marriage except for a legal impediment. A legal impediment includes only an impediment which results because a previous marriage had not ended at the time of the ceremony or because there was a defect in the procedure followed in connection with the intended marriage. For example, a defect in the procedure may be found where a marriage was performed through a religious ceremony in a country that requires a civil ceremony for a valid marriage. Good faith means that at the time of the ceremony you did not know that a legal impediment existed, or if you did know, you thought that it would not prevent a valid marriage.

(b) *Entitlement based upon a deemed valid marriage.* To be entitled to benefits as a wife, husband, widow or widower as the result of a deemed valid marriage, you and the insured must have been living in the same household (see § 404.347) at the time the insured died or, if the insured is living, at the time you apply for benefits. However, a marriage that had been deemed valid, shall continue to be deemed valid if the insured individual and the person entitled to benefits as the wife or husband of the insured individual are no longer living in the same household at the time of death of the insured individual.

[44 FR 34481, June 15, 1979, as amended at 45 FR 65540, Oct. 3, 1980; 48 FR 21927, May 16, 1983; 58 FR 64892, Dec. 10, 1993]

§ 404.347 "Living in the same household" defined.

Living in the same household means that you and the insured customarily lived together as husband and wife in the same residence. You may be considered to be living in the same household although one of you is temporarily absent from the residence. An absence will be considered temporary if:

(a) It was due to service in the U.S. Armed Forces;

(b) It was 6 months or less and neither you nor the insured were outside of the United States during this time and the absence was due to business, employment, or confinement in a hospital, nursing home, other medical institution, or a penal institution;

(c) It was for an extended separation, regardless of the duration, due to the confinement of either you or the insured in a hospital, nursing home, or other medical institution, if the evidence indicates that you were separated solely for medical reasons and you otherwise would have resided together; or

(d) It was based on other circumstances, and it is shown that you and the insured reasonably could have expected to live together in the near future.

[61 FR 41330, Aug. 8, 1996]

§ 404.348 When is a child living with me in my care?

A child who has been living with you for at least 30 days is *in your care* unless—

(a) The child is in active military service;

(b) The child is 16 years old or older and not disabled;

(c) The child is 16 years old or older with a mental disability, but you do not actively supervise his or her activities and you do not make important decisions about his or her needs, either alone or with help from your spouse; or

(d) The child is 16 years old or older with a physical disability, but it is not necessary for you to perform personal services for him or her. Personal services are services such as dressing, feeding, and managing money that the child cannot do alone because of a disability.

[44 FR 34481, June 15, 1979, as amended at 48 FR 21927, May 16, 1983; 73 FR 40967, July 17, 2008]

§ 404.349 When is a child living apart from me in my care?

(a) *In your care.* A child living apart from you is in your care if—

(1) The child lived apart from you for not more than 6 months, or the child's current absence from you is not expected to last over 6 months;

(2) The child is under 16 years old, you supervise his or her activities and make important decisions about his or her needs, and one of the following circumstances exist:

(i) The child is living apart because of school but spends at least 30 days vacation with you each year unless some event makes having the vacation unreasonable; and if you and the child's other parent are separated, the school looks to you for decisions about the child's welfare;

(ii) The child is living apart because of your employment but you make regular and substantial contributions to his or her support; see § 404.366(a) for a definition of *contributions for support*;

(iii) The child is living apart because of a physical disability that the child has or that you have; or

(3) The child is 16 years old or older, is mentally disabled, and you supervise his or her activities, make important decisions about his or her needs, and help in his or her upbringing and development.

(b) *Not in your care.* A child living apart from you is not in your care if—

(1) The child is in active military service;

(2) The child is living with his or her other parent;

(3) The child is removed from your custody and control by a court order;

(4) The child is 16 years old or older, is mentally competent, and either has been living apart from you for 6 months or more or begins living apart from you and is expected to be away for more than 6 months;

(5) You gave your right to have custody and control of the child to someone else; or

(6) You are mentally disabled.

[44 FR 34481, June 15, 1979, as amended at 48 FR 21927, May 16, 1983]

CHILD'S BENEFITS

§ 404.350 Who is entitled to child's benefits?

(a) *General.* You are entitled to child's benefits on the earnings record of an insured person who is entitled to old-age or disability benefits or who has died if—

(1) You are the insured person's child, based upon a relationship described in §§ 404.355 through 404.359;

(2) You are dependent on the insured, as defined in §§ 404.360 through 404.365;

(3) You apply;

(4) You are unmarried; and

(5) You are under age 18; you are 18 years old or older and have a disability that began before you became 22 years old; or you are 18 years or older and qualify for benefits as a full-time student as described in § 404.367.

(b) *Entitlement preclusion for certain disabled children.* If you are a disabled child as referred to in paragraph (a)(5) of this section, and your disability was based on a finding that drug addiction or alcoholism was a contributing factor material to the determination of disability (as described in § 404.1535) and your benefits ended after your receipt of 36 months of benefits, you will not be entitled to benefits based on disability for any month following such 36 months regardless of the number of entitlement periods you have had if, in such following months, drug addiction or alcoholism is a contributing factor

material to the later determination of disability (as described in § 404.1535).

[44 FR 34481, June 15, 1979, as amended at 48 FR 21927, May 16, 1983; 60 FR 8146, Feb. 10, 1995; 61 FR 38363, July 24, 1996]

§ 404.351 Who may be reentitled to child's benefits?

If your entitlement to child's benefits has ended, you may be reentitled on the same earnings record if you have not married and if you apply for reentitlement. Your reentitlement may begin with—

(a) The first month in which you qualify as a full-time student. (See § 404.367.)

(b) The first month in which you are disabled, if your disability began before you became 22 years old.

(c) The first month you are under a disability that began before the end of the 84th month following the month in which your benefits had ended because an earlier disability had ended; or

(d) With respect to benefits payable for months beginning October 2004, you can be reentitled to childhood disability benefits at anytime if your prior entitlement terminated because you ceased to be under a disability due to the performance of substantial gainful activity and you meet the other requirements for reentitlement. The 84-month time limit in paragraph (c) in this section continues to apply if your previous entitlement to childhood disability benefits terminated because of medical improvement.

[44 FR 34481, June 15, 1979, as amended at 48 FR 21927, May 16, 1983; 61 FR 38363, July 24, 1996; 71 FR 66865, Nov. 17, 2006]

§ 404.352 When does my entitlement to child's benefits begin and end?

(a) We will find your entitlement to child's benefits begins at the following times:

(1) If the insured is deceased, with the first month covered by your application in which you meet all other requirements for entitlement.

(2) If the insured is living and your first month of entitlement is September 1981 or later, with the first month covered by your application throughout which you meet all other requirements for entitlement.

(3) If the insured is living and your first month of entitlement is before September 1981, with the first month covered by your application in which you meet all other requirements for entitlement.

(b) We will find your entitlement to child's benefits ends at the earliest of the following times:

(1) With the month before the month in which you become 18 years old, if you are not disabled or a full-time student.

(2) With the second month following the month in which your disability ends, if you become 18 years old and you are disabled. If your disability ends on or after December 1, 1980, your entitlement to child's benefits continues, subject to the provisions of paragraphs (c) and (d) of this section, until the month before your termination month (§ 404.325).

(3) With the last month you are a full-time student or, if earlier, with the month before the month you become age 19, if you become 18 years old and you qualify as a full-time student who is not disabled. If you become age 19 in a month in which you have not completed the requirements for, or received, a diploma or equivalent certificate from an elementary or secondary school and you are required to enroll for each quarter or semester, we will find your entitlement ended with the month in which the quarter or semester in which you are enrolled ends. If the school you are attending does not have a quarter or semester system which requires reenrollment, we will find your entitlement to benefits ended with the month you complete the course or, if earlier, the first day of the third month following the month in which you become 19 years old.

(4) With the month before the month you marry. We will not find your benefits ended, however, if you are age 18 or older, disabled, and you marry a person entitled to child's benefits based on disability or person entitled to old-age, divorced wife's, divorced husband's, widow's, widower's, mother's, father's, parent's, or disability benefits.

(5) With the month before the month the insured's entitlement to old-age or disability benefits ends for a reason other than death or the attainment of

full retirement age (as defined in § 404.409). Exception: We will continue your benefits if the insured person was entitled to disability benefits based on a finding that drug addiction or alcoholism was a contributing factor material to the determination of his or her disability (as described in § 404.1535), the insured person's benefits ended after 36 months of payment (see § 404.316(e)) or 12 consecutive months of suspension for noncompliance with treatment (see § 404.316(f)), and the insured person remains disabled.

(6) With the month before the month you die.

(7) With the month in which the divorce between your parent (including an adoptive parent) and the insured stepparent becomes final if you are entitled to benefits as a stepchild and the marriage between your parent (including an adoptive parent) and the insured stepparent ends in divorce.

(c) If you are entitled to benefits as a disabled child age 18 or over and your disability is based on a finding that drug addiction or alcoholism was a contributing factor material to the determination of disability (as described in § 404.1535), we will find your entitlement to benefits ended under the following conditions:

(1) If your benefits have been suspended for a period of 12 consecutive months for failure to comply with treatment, with the month following the 12 months unless you are otherwise disabled without regard to drug addiction or alcoholism (see § 404.470(c)).

(2) If you have received 36 months of benefits on that basis when treatment is available, regardless of the number of entitlement periods you may have had, with the month following such 36-month payment period unless you are otherwise disabled without regard to drug addiction or alcoholism.

(d)(1) Your benefits may be continued after your impairment is no longer disabling if—

(i) You are participating in an appropriate program of vocational rehabilitation services, employment services, or other support services, as described in § 404.327(a) and (b);

(ii) You began participating in the program before the date your disability ended; and

(iii) We have determined under § 404.328 that your completion of the program, or your continuation in the program for a specified period of time, will increase the likelihood that you will not have to return to the disability benefit rolls.

(2) We generally will stop your benefits with the earliest of these months—

(i) The month in which you complete the program; or

(ii) The month in which you stop participating in the program for any reason (see § 404.327(b) for what we mean by ''participating'' in the program); or

(iii) The month in which we determine under § 404.328 that your continuing participation in the program will no longer increase the likelihood that you will not have to return to the disability benefit rolls.

Exception to paragraph (d): In no case will we stop your benefits with a month earlier than the second month after the month your disability ends, provided that you meet all other requirements for entitlement to and payment of benefits through such month.

(e) If, after November 1980, you have a disabling impairment (§ 404.1511), we will pay you benefits for all months in which you do not do substantial gainful activity during the reentitlement period (§ 404.1592a) following the end of your trial work period (§ 404.1592). If you are unable to do substantial gainful activity in the first month following the reentitlement period, we will pay you benefits until you are able to do substantial gainful activity. (Earnings during your trial work period do not affect the payment of your benefits during that period.) We will also pay you benefits for the first month after the trial work period in which you do substantial gainful activity and the two succeeding months, whether or not you do substantial gainful activity during those succeeding months. After those three months, we cannot pay you benefits for any months in which you do substantial gainful activity.

[68 FR 4707, Jan. 30, 2003, as amended at 70 FR 36506, June 24, 2005; 75 FR 52621, Aug. 27, 2010]

§ 404.353 Child's benefit amounts.

(a) *General*. Your child's monthly benefit is equal to one-half of the insured person's primary insurance amount if he or she is alive and three-fourths of the primary insurance amount if he or she has died. The amount of your monthly benefit may change as explained in § 404.304.

(b) *Entitlement to more than one benefit*. If you are entitled to a child's benefit on more than one person's earnings record, you will ordinarily receive only the benefit payable on the record with the highest primary insurance amount. If your benefit before any reduction would be larger on an earnings record with a lower primary insurance amount and no other person entitled to benefits on any earnings record would receive a smaller benefit as a result of your receiving benefits on the record with the lower primary insurance amount, you will receive benefits on that record. See § 404.407(d) for a further explanation. If you are entitled to a child's benefit and to other dependent's or survivor's benefits, you can receive only the highest of the benefits.

[44 FR 34481, June 15, 1979; 44 FR 56691, Oct. 2, 1979, as amended at 48 FR 21928, May 16, 1983; 51 FR 12606, Apr. 14, 1986; 61 FR 38363, July 24, 1996]

§ 404.354 Your relationship to the insured.

You may be related to the insured person in one of several ways and be entitled to benefits as his or her child, *i.e.*, as a natural child, legally adopted child, stepchild, grandchild, stepgrandchild, or equitably adopted child. For details on how we determine your relationship to the insured person, see §§ 404.355 through 404.359.

[63 FR 57593, Oct. 28, 1998]

§ 404.355 Who is the insured's natural child?

(a) *Eligibility as a natural child*. You may be eligible for benefits as the insured's natural child if any of the following conditions is met:

(1) You could inherit the insured's personal property as his or her natural child under State inheritance laws, as described in paragraph (b) of this section.

(2) You are the insured's natural child and the insured and your mother or father went through a ceremony which would have resulted in a valid marriage between them except for a ''legal impediment'' as described in § 404.346(a).

(3) You are the insured's natural child and your mother or father has not married the insured, but the insured has either acknowledged in writing that you are his or her child, been decreed by a court to be your father or mother, or been ordered by a court to contribute to your support because you are his or her child. If the insured is deceased, the acknowledgment, court decree, or court order must have been made or issued before his or her death. To determine whether the conditions of entitlement are met throughout the first month as stated in § 404.352(a), the written acknowledgment, court decree, or court order will be considered to have occurred on the first day of the month in which it actually occurred.

(4) Your mother or father has not married the insured but you have evidence other than the evidence described in paragraph (a)(3) of this section to show that the insured is your natural father or mother. Additionally, you must have evidence to show that the insured was either living with you or contributing to your support at the time you applied for benefits. If the insured is not alive at the time of your application, you must have evidence to show that the insured was either living with you or contributing to your support when he or she died. See § 404.366 for an explanation of the terms ''living with'' and ''contributions for support.''

(b) *Use of State Laws*—(1) *General*. To decide whether you have inheritance rights as the natural child of the insured, we use the law on inheritance rights that the State courts would use to decide whether you could inherit a child's share of the insured's personal property if the insured were to die without leaving a will. If the insured is living, we look to the laws of the State where the insured has his or her permanent home when you apply for benefits. If the insured is deceased, we look to the laws of the State where the insured had his or her permanent home when

he or she died. If the insured's permanent home is not or was not in one of the 50 States, the Commonwealth of Puerto Rico, the Virgin Islands, Guam, American Samoa, or the Northern Mariana Islands, we will look to the laws of the District of Columbia. For a definition of permanent home, see § 404.303. For a further discussion of the State laws we use to determine whether you qualify as the insured's natural child, see paragraphs (b)(3) and (b)(4) of this section. If these laws would permit you to inherit the insured's personal property as his or her child, we will consider you the child of the insured.

(2) *Standards*. We will not apply any State inheritance law requirement that an action to establish paternity must be taken within a specified period of time measured from the worker's death or the child's birth, or that an action to establish paternity must have been started or completed before the worker's death. If applicable State inheritance law requires a court determination of paternity, we will not require that you obtain such a determination but will decide your paternity by using the standard of proof that the State court would use as the basis for a determination of paternity.

(3) *Insured is living*. If the insured is living, we apply the law of the State where the insured has his or her permanent home when you file your application for benefits. We apply the version of State law in effect when we make our final decision on your application for benefits. If you do not qualify as a child of the insured under that version of State law, we look at all versions of State law that were in effect from the first month for which you could be entitled to benefits up until the time of our final decision and apply the version of State law that is most beneficial to you.

(4) *Insured is deceased*. If the insured is deceased, we apply the law of the State where the insured had his or her permanent home when he or she died. We apply the version of State law in effect when we make our final decision on your application for benefits. If you do not qualify as a child of the insured under that version of State law, we will apply the version of State law that was in effect at the time the insured died, or any version of State law in effect from the first month for which you could be entitled to benefits up until our final decision on your application. We will apply whichever version is most beneficial to you. We use the following rules to determine the law in effect as of the date of death:

(i) If a State inheritance law enacted after the insured's death indicates that the law would be retroactive to the time of death, we will apply that law; or

(ii) If the inheritance law in effect at the time of the insured's death was later declared unconstitutional, we will apply the State law which superseded the unconstitutional law.

[63 FR 57593, Oct. 28, 1998]

§ 404.356 Who is the insured's legally adopted child?

You may be eligible for benefits as the insured's child if you were legally adopted by the insured. If you were legally adopted after the insured's death by his or her surviving spouse you may also be considered the insured's legally adopted child. We apply the adoption laws of the State or foreign country where the adoption took place, not the State inheritance laws described in § 404.355, to determine whether you are the insured's legally adopted child.

[44 FR 34481, June 15, 1979, as amended at 63 FR 57594, Oct. 28, 1998]

§ 404.357 Who is the insured's stepchild?

You may be eligible for benefits as the insured's stepchild if, after your birth, your natural or adopting parent married the insured. You also may be eligible as a stepchild if you were conceived prior to the marriage of your natural parent to the insured but were born after the marriage and the insured is not your natural parent. The marriage between the insured and your parent must be a valid marriage under State law or a marriage which would be valid except for a *legal impediment* described in § 404.346(a). If the insured is alive when you apply, you must have been his or her stepchild for at least 1 year immediately preceding the day you apply. For purposes of determining whether the conditions of entitlement

are met *throughout* the first month as stated in § 404.352(a)(2)(i), you will be considered to meet the one year duration requirement throughout the month in which the anniversary of the marriage occurs. If the insured is not alive when you apply, you must have been his or her stepchild for at least 9 months immediately preceding the day the insured died. This 9-month requirement will not have to be met if the marriage between the insured and your parent lasted less than 9 months under one of the conditions described in § 404.335(a)(2)(i)–(iii).

[48 FR 21928, May 16, 1983, as amended at 64 FR 14608, Mar. 26, 1999; 70 FR 61365, Oct. 24, 2005]

§ 404.358 Who is the insured's grandchild or stepgrandchild?

(a) *Grandchild and stepgrandchild defined.* You may be eligible for benefits as the insured's grandchild or stepgrandchild if you are the natural child, adopted child, or stepchild of a person who is the insured's child as defined in §§ 404.355 through 404.357, or § 404.359. Additionally, for you to be eligible as a grandchild or stepgrandchild, your natural or adoptive parents must have been either deceased or under a disability, as defined in § 404.1501(a), at the time your grandparent or stepgrandparent became entitled to old-age or disability benefits or died; or if your grandparent or stepgrandparent had a period of disability that continued until he or she became entitled to benefits or died, at the time the period of disability began. If your parent is deceased, for purposes of determining whether the conditions of entitlement are met *throughout* the first month as stated in § 404.352(a)(2)(i), your parent will be considered to be deceased as of the first day of the month of death.

(b) *Legally adopted grandchild or stepgrandchild.* If you are the insured's grandchild or stepgrandchild and you are legally adopted by the insured or by the insured's surviving spouse after his or her death, you are considered an adopted child and the dependency requirements of § 404.362 must be met.

[44 FR 34481, June 15, 1979, as amended at 48 FR 21928, May 16, 1983]

§ 404.359 Who is the insured's equitably adopted child?

You may be eligible for benefits as an equitably adopted child if the insured had agreed to adopt you as his or her child but the adoption did not occur. The agreement to adopt you must be one that would be recognized under State law so that you would be able to inherit a child's share of the insured's personal property if he or she were to die without leaving a will. The agreement must be in whatever form, and you must meet whatever requirements for performance under the agreement, that State law directs. If you apply for child's benefits after the insured's death, the law of the State where the insured had his or her permanent home at the time of his or her death will be followed. If you apply for child's benefits during the insured's life, the law of the State where the insured has his or her permanent home at the time or your application will be followed.

§ 404.360 When a child is dependent upon the insured person.

One of the requirements for entitlement to child's benefits is that you be dependent upon the insured. The evidence you need to prove your dependency is determined by how you are related to the insured. To prove your dependency you may be asked to show that at a specific time you lived with the insured, that you received contributions for your support from the insured, or that the insured provided at least one-half of your support. These dependency requirements, and the time at which they must be met, are explained in §§ 404.361 through 404.365. The terms *living with*, *contributions for support*, and *one-half support* are defined in § 404.366.

§ 404.361 When a natural child is dependent.

(a) *Dependency of natural child.* If you are the insured's natural child, as defined in § 404.355, you are considered dependent upon him or her, except as stated in paragraph (b) of this section.

(b) *Dependency of natural child legally adopted by someone other than the insured.* (1) Except as indicated in paragraph (b)(2) of this section, if you are legally adopted by someone other than

the insured (your natural parent) during the insured's lifetime, you are considered dependent upon the insured only if the insured was either living with you or contributing to your support at one of the following times:

(i) When you applied;

(ii) When the insured died; or

(iii) If the insured had a period of disability that lasted until he or she became entitled to disability or old-age benefits or died, at the beginning of the period of disability or at the time he or she became entitled to disability or old-age benefits.

(2) You are considered dependent upon the insured (your natural parent) if:

(i) You were adopted by someone other than the insured after you applied for child's benefits; or

(ii) The insured had a period of disability that lasted until he or she became entitled to old-age or disability benefits or died, and you are adopted by someone other than the insured after the beginning of that period of disability.

[64 FR 14608, Mar. 26, 1999]

§ 404.362 When a legally adopted child is dependent.

(a) *General.* If you were legally adopted by the insured before he or she became entitled to old-age or disability benefits, you are considered dependent upon him or her. If you were legally adopted by the insured after he or she became entitled to old-age or disability benefits and you apply for child's benefits during the life of the insured, you must meet the dependency requirements stated in paragraph (b) of this section. If you were legally adopted by the insured after he or she became entitled to old-age or disability benefits and you apply for child's benefits after the death of the insured, you are considered dependent upon him or her. If you were adopted after the insured's death by his or her surviving spouse, you may be considered dependent upon the insured only under the conditions described in paragraph (c) of this section.

(b) *Adoption by the insured after he or she became entitled to benefits*—(1) *General.* If you are legally adopted by the insured after he or she became entitled to benefits and you are not the insured's natural child or stepchild, you are considered dependent on the insured during his or her lifetime only if—

(i) You had not attained age 18 when adoption proceedings were started, and your adoption was issued by a court of competent jurisdiction within the United States; or

(ii) You had attained age 18 before adoption proceedings were started; your adoption was issued by a court of competent jurisdiction within the United States; and you were living with or receiving at least one-half of your support from the insured for the year immediately preceding the month in which your adoption was issued.

(2) *Natural child and stepchild.* If you were legally adopted by the insured after he or she became entitled to benefits and you are the insured's natural child or stepchild, you are considered dependent upon the insured.

(c) *Adoption by the insured's surviving spouse*—(1) *General.* If you are legally adopted by the insured's surviving spouse after the insured's death, you are considered dependent upon the insured as of the date of his or her death if—

(i) You were either living with or receiving at least one-half of your support from the insured at the time of his or her death; and,

(ii) The insured had started adoption proceedings before he or she died; or if the insured had not started the adoption proceedings before he or she died, his or her surviving spouse began and completed the adoption within 2 years of the insured's death.

(2) *Grandchild or stepgrandchild adopted by the insured's surviving spouse.* If you are the grandchild or stepgrandchild of the insured and any time after the death of the insured you are legally adopted by the insured's surviving spouse, you are considered the dependent child of the insured as of the date of his or her death if—

(i) Your adoption took place in the United States;

(ii) At the time of the insured's death, your natural, adopting or stepparent was not living in the insured's household and making regular contributions toward your support; and

(iii) You meet the dependency requirements stated in § 404.364.

[44 FR 34481, June 15, 1979; 44 FR 56691, Oct. 2, 1979, as amended at 56 FR 24000, May 28, 1991; 57 FR 3938, Feb. 3, 1992]

§ 404.363 When is a stepchild dependent?

If you are the insured's stepchild, as defined in § 404.357, we consider you dependent on him or her if you were receiving at least one-half of your support from him or her at one of these times—

(a) When you applied;

(b) When the insured died; or

(c) If the insured had a period of disability that lasted until his or her death or entitlement to disability or old-age benefits, at the beginning of the period of disability or at the time the insured became entitled to benefits.

[44 FR 34481, June 15, 1979, as amended at 75 FR 52621, Aug. 27, 2010]

§ 404.364 When is a grandchild or stepgrandchild dependent?

If you are the insured's grandchild or stepgrandchild, as defined in § 404.358(a), you are considered dependent upon the insured if—

(a) You began living with the insured before you became 18 years old; and

(b) You were living with the insured in the United States and receiving at least one-half of your support from him or her for the year before he or she became entitled to old-age or disability benefits or died; or if the insured had a period of disability that lasted until he or she became entitled to benefits or died, for the year immediately before the month in which the period of disability began. If you were born during the 1-year period, the insured must have lived with you and provided at least one-half of your support for *substantially all* of the period that begins on the date of your birth. Paragraph (c) of this section explains when the *substantially all* requirement is met.

(c) The ''substantially all'' requirement will be met if, at one of the times described in paragraph (b) of this section, the insured was living with you and providing at least one-half of your support, and any period during which he or she was not living with you and providing one-half of your support did not exceed the lesser of 3 months or one-half of the period beginning with the month of your birth.

[44 FR 34481, June 15, 1979, as amended at 73 FR 40967, July 17, 2008]

§ 404.365 When an equitably adopted child is dependent.

If you are the insured's equitably adopted child, as defined in § 404.359, you are considered dependent upon him or her if you were either living with or receiving contributions for your support from the insured at the time of his or her death. If your equitable adoption is found to have occurred after the insured became entitled to old-age or disability benefits, your dependency cannot be established during the insured's life. If your equitable adoption is found to have occurred before the insured became entitled to old-age or disability benefits, you are considered dependent upon him or her if you were either living with or receiving contributions for your support from the insured at one of these times—

(a) When you applied; or

(b) If the insured had a period of disability that lasted until he or she became entitled to old-age or disability benefits, at the beginning of the period of disability or at the time the insured became entitled to benefits.

§ 404.366 "Contributions for support," "one-half support," and "living with" the insured defined—determining first month of entitlement.

To be eligible for child's or parent's benefits, and in certain Government pension offset cases, you must be dependent upon the insured person at a particular time or be assumed dependent upon him or her. What it means to be a dependent child is explained in §§ 404.360 through 404.365; what it means to be a dependent parent is explained in § 404.370(f); and the Government pension offset is explained in § 404.408a. Your dependency upon the insured person may be based upon whether at a specified time you were receiving *contributions for your support* or *one-half of your support* from the insured person, or whether you were *living with* him or her. These terms are defined in paragraphs (a) through (c) of this section.

(a) *Contributions for support.* The insured makes a contribution for your support if the following conditions are met:

(1) The insured gives some of his or her own cash or goods to help support you. Support includes food, shelter, routine medical care, and other ordinary and customary items needed for your maintenance. The value of any goods the insured contributes is the same as the cost of the goods when he or she gave them for your support. If the insured provides services for you that would otherwise have to be paid for, the cash value of his or her services may be considered a contribution for your support. An example of this would be work the insured does to repair your home. The insured person is making a contribution for your support if you receive an allotment, allowance, or benefit based upon his or her military pay, veterans' pension or compensation, or social security earnings.

(2) Contributions must be made regularly and must be large enough to meet an important part of your ordinary living costs. Ordinary living costs are the costs for your food, shelter, routine medical care, and similar necessities. If the insured person only provides gifts or donations once in a while for special purposes, they will not be considered contributions for your support. Although the insured's contributions must be made on a regular basis, temporary interruptions caused by circumstances beyond the insured person's control, such as illness or unemployment, will be disregarded unless during this interruption someone else takes over responsibility for supporting you on a permanent basis.

(b) *One-half support.* The insured person provides one-half of your support if he or she makes regular contributions for your ordinary living costs; the amount of these contributions equals or exceeds one-half of your ordinary living costs; and any income (from sources other than the insured person) you have available for support purposes is one-half or less of your ordinary living costs. We will consider any income which is available to you for your support whether or not that income is actually used for your ordinary living costs. Ordinary living costs are the costs for your food, shelter, routine medical care, and similar necessities. A contribution may be in cash, goods, or services. The insured is not providing at least one-half of your support unless he or she has done so for a reasonable period of time. Ordinarily we consider a reasonable period to be the 12-month period immediately preceding the time when the one-half support requirement must be met under the rules in §§ 404.362(c)(1) and 404.363 (for child's benefits), in § 404.370(f) (for parent's benefits) and in § 404.408a(c) (for benefits where the Government pension offset may be applied). A shorter period will be considered reasonable under the following circumstances:

(1) At some point within the 12-month period, the insured either begins or stops providing at least one-half of your support on a permanent basis and this is a change in the way you had been supported up to then. In these circumstances, the time from the change up to the end of the 12-month period will be considered a reasonable period, unless paragraph (b)(2) of this section applies. The change in your source of support must be permanent and not temporary. Changes caused by seasonal employment or customary visits to the insured's home are considered temporary.

(2) The insured provided one-half or more of your support for at least 3 months of the 12-month period, but was forced to stop or reduce contributions because of circumstances beyond his or her control, such as illness or unemployment, and no one else took over the responsibility for providing at least one-half of your support on a permanent basis. Any support you received from a public assistance program is not considered as a taking over of responsibility for your support by someone else. Under these circumstances, a reasonable period is that part of the 12-month period before the insured was forced to reduce or stop providing at least one-half of your support.

(c) *''Living with'' the insured.* You are living with the insured if you ordinarily live in the same home with the insured and he or she is exercising, or has the right to exercise, parental control and authority over your activities. You are living with the insured during

temporary separations if you and the insured expect to live together in the same place after the separation. Temporary separations may include the insured's absence because of active military service or imprisonment if he or she still exercises parental control and authority. However, you are not considered to be living with the insured if you are in active military service or in prison. If *living with* is used to establish dependency for your eligibility to child's benefits and the date your application is filed is used for establishing the point for determining dependency, you must have been living with the insured throughout the month your application is filed in order to be entitled to benefits for that month.

(d) *Determining first month of entitlement.* In evaluating whether dependency is established under paragraph (a), (b), or (c) of this section, for purposes of determining whether the conditions of entitlement are met *throughout* the first month as stated in § 404.352(a)(2)(i), we will not use the temporary separation or temporary interruption rules.

[44 FR 34481, June 15, 1979, as amended at 45 FR 65540, Oct. 3, 1980; 48 FR 21928, May 16, 1983; 52 FR 26955, July 17, 1987; 64 FR 14608, Mar. 26, 1999]

§ 404.367 When you are a "full-time elementary or secondary school student".

You may be eligible for child's benefits if you are a full-time elementary or secondary school student. For the purposes of determining whether the conditions of entitlement are met throughout the first month as stated in § 404.352(a)(2)(i), if you are entitled as a student on the basis of attendance at an elementary or secondary school, you will be considered to be in full-time attendance for a month during any part of which you are in full-time attendance. You are a full-time elementary or secondary school student if you meet all the following conditions:

(a) You attend a school which provides elementary or secondary education as determined under the law of the State or other jurisdiction in which it is located. Participation in the following programs also meets the requirements of this paragraph:

(1) You are instructed in elementary or secondary education at home in accordance with a home school law of the State or other jurisdiction in which you reside; or

(2) You are in an independent study elementary or secondary education program in accordance with the law of the State or other jurisdiction in which you reside which is administered by the local school or school district/jurisdiction.

(b) You are in full-time attendance in a day or evening noncorrespondence course of at least 13 weeks duration and you are carrying a subject load which is considered full-time for day students under the institution's standards and practices. If you are in a home schooling program as described in paragraph (a)(1) of this section, you must be carrying a subject load which is considered full-time for day students under standards and practices set by the State or other jurisdiction in which you reside;

(c) To be considered in full-time attendance, your scheduled attendance must be at the rate of at least 20 hours per week unless one of the exceptions in paragraphs (c) (1) and (2) of this section applies. If you are in an independent study program as described in paragraph (a)(2) of this section, your number of hours spent in school attendance are determined by combining the number of hours of attendance at a school facility with the agreed upon number of hours spent in independent study. You may still be considered in full-time attendance if your scheduled rate of attendance is below 20 hours per week if we find that:

(1) The school attended does not schedule at least 20 hours per week and going to that particular school is your only reasonable alternative; or

(2) Your medical condition prevents you from having scheduled attendance of at least 20 hours per week. To prove that your medical condition prevents you from scheduling 20 hours per week, we may request that you provide appropriate medical evidence or a statement from the school.

(d) You are not being paid while attending the school by an employer who has requested or required that you attend the school;

(e) You are in grade 12 or below; and

(f) You are not subject to the provisions in § 404.468 for nonpayment of benefits to certain prisoners and certain other inmates of publicly funded institutions.

[48 FR 21928, May 16, 1983, as amended at 48 FR 55452, Dec. 13, 1983; 56 FR 35999, July 30, 1991; 61 FR 38363, July 24, 1996]

§ 404.368 When you are considered a full-time student during a period of nonattendance.

If you are a full-time student, your eligibility may continue during a period of nonattendance (including part-time attendance) if all the following conditions are met:

(a) The period of nonattendance is 4 consecutive months or less;

(b) You show us that you intend to resume your studies as a full-time student at the end of the period or at the end of the period you are a full-time student; and

(c) The period of nonattendance is not due to your expulsion or suspension from the school.

[48 FR 21929, May 16, 1983]

PARENT'S BENEFITS

§ 404.370 Who is entitled to parent's benefits?

You may be entitled to parent's benefits on the earnings record of someone who has died and was fully insured. You are entitled to these benefits if all the following conditions are met:

(a) You are related to the insured person as his or her parent in one of the ways described in § 404.374.

(b) You are at least 62 years old.

(c) You have not married since the insured person died.

(d) You apply.

(e) You are not entitled to an old-age benefit equal to or larger than the parent's benefit amount.

(f) You were receiving at least one-half of your support from the insured at the time he or she died, or at the beginning of any period of disability he or she had that continued up to death. See § 404.366(b) for a definition of *one-half support*. If you were receiving one-half of your support from the insured at the time of the insured's death, you must give us proof of this support within 2 years of the insured's death. If you were receiving one-half of your support from the insured at the time his or her period of disability began, you must give us proof of this support within 2 years of the month in which the insured filed his or her application for the period of disability. You must file the evidence of support even though you may not be eligible for parent's benefits until a later time. There are two exceptions to the 2-year filing requirement:

(1) If there is a good cause for failure to provide proof of support within the 2-year period, we will consider the proof you give us as though it were provided within the 2-year period. Good cause does not exist if you were informed of the need to provide the proof within the 2-year period and you neglected to do so or did not intend to do so. Good cause will be found to exist if you did not provide the proof within the time limit due to—

(i) Circumstances beyond your control, such as extended illness, mental or physical incapacity, or a language barrier;

(ii) Incorrect or incomplete information we furnished you;

(iii) Your efforts to get proof of the support without realizing that you could submit the proof after you gave us some other evidence of that support; or

(iv) Unusual or unavoidable circumstances that show you could not reasonably be expected to know of the 2-year time limit.

(2) The Soldiers' and Sailors' Civil Relief Act of 1940 provides for extending the filing time.

§ 404.371 When parent's benefits begin and end.

(a) You are entitled to parent's benefits beginning with the first month covered by your application in which you meet all the other requirements for entitlement.

(b) Your entitlement to benefits ends with the month before the month in which one of the following events first occurs:

(1) You become entitled to an old-age benefit equal to or larger than the parent's benefit.

(2) You marry, unless your marriage is to someone entitled to wife's, husband's, widow's, widower's, mother's, father's, parent's or disabled child's benefits. If you marry a person entitled to these benefits, the marriage does not affect your benefits.

(3) You die.

[44 FR 34481, June 15, 1979, as amended at 49 FR 24116, June 12, 1984]

§ 404.373 Parent's benefit amounts.

Your parent's monthly benefit before any reduction that may be made as explained in § 404.304, is figured in one of the following ways:

(a) *One parent entitled.* Your parent's monthly benefit is equal to 82½ percent of the insured person's primary insurance amount if you are the only parent entitled to benefits on his or her earnings record.

(b) *More than one parent entitled.* Your parent's monthly benefit is equal to 75 percent of the insured person's primary insurance amount if there is another parent entitled to benefits on his or her earnings record.

§ 404.374 Parent's relationship to the insured.

You may be eligible for benefits as the insured person's parent if—

(a) You are the mother or father of the insured and would be considered his or her parent under the laws of the State where the insured had a permanent home when he or she died;

(b) You are the adoptive parent of the insured and legally adopted him or her before the insured person became 16 years old; or

(c) You are the stepparent of the insured and you married the insured's parent or adoptive parent before the insured became 16 years old. The marriage must be valid under the laws of the State where the insured had his or her permanent home when he or she died. See § 404.303 for a definition of *permanent home.*

SPECIAL PAYMENTS AT AGE 72

§ 404.380 General.

Some older persons had little or no chance to become fully insured for regular social security benefits during their working years. For those who became 72 years old several years ago but are not fully insured, a *special payment* may be payable as described in the following sections.

§ 404.381 Who is entitled to special age 72 payments?

You are entitled to a special age 72 payment if—

(a) You have attained the age of 72; and

(1) You attained such age before 1968; or

(2) You attained such age after 1967—or, for applications filed after November 5, 1990, you attained age 72 after 1967 and before 1972—and have at least 3 quarters of coverage for each calendar year elapsing after 1966 and before the year in which you attained age 72 (see subpart B for a description of quarters of coverage);

(b) You reside in one of the 50 States, the District of Columbia, or the Northern Mariana Islands;

(c) You apply; and

(d) You are a U.S. citizen or a citizen of the Northern Mariana Islands; or you are an alien who was legally admitted for permanent residence in the United States and who has resided here continuously for 5 years. Residence in the United States includes residence in the Northern Mariana Islands, Guam, American Samoa, Puerto Rico, and the Virgin Islands.

[44 FR 34481, June 15, 1979, as amended at 57 FR 21598, May 21, 1992]

§ 404.382 When special age 72 payments begin and end.

(a) Your entitlement to the special age 72 payment begins with the first month covered by your application in which you meet all the other requirements for entitlement.

(b) Your entitlement to this payment ends with the month before the month of your death.

§ 404.383 Special age 72 payment amounts.

(a) *Payment from May 1983 on.* If you are entitled to special age 72 payments from May 1983 on, you will receive a monthly payment of $125.60. If your spouse is also entitled to special age 72 payments, he or she will also receive $125.60. This amount, first payable for

June 1982, will be increased when *cost-of-living* adjustments of Social Security benefits occur. This special payment may be reduced, suspended or not paid at all as explained in § 404.384.

(b) *Payment prior to May 1983.* If a husband or a single individual is entitled to special age 72 payments for months prior to May 1983, the amount payable was $125.60 for the months since June 1982. The wife received an amount approximiately one-half the husband's amount (*i.e.*, $63.00 for months in the period June 1982-April 1983).

[49 FR 24116, June 12, 1984]

§ 404.384 Reductions, suspensions, and nonpayments of special age 72 payments.

(a) *General.* Special age 72 payments may not be paid for any month you receive public assistance payments. The payment may be reduced if you or your spouse are eligible for a government pension. In some instances, the special payment may not be paid while you are outside the United States. The rules on when special payments may be suspended, reduced, or not paid are provided in paragraphs (b) through (e) of this section.

(b) *Suspension of special age 72 payments when you receive certain assistance payments.* You cannot receive the special payment if supplemental security income or aid to families with dependent children (AFDC) payments are payable to you, or if your needs are considered in setting the amounts of these assistance payments made to someone else. However, if these assistance payments are stopped, you may receive the special payment beginning with the last month for which the assistance payments were paid.

(c) *Reduction of special age 72 payments when you or your spouse are eligible for a government pension.* Special payments are reduced for any regular government pension (or lump-sum payment given instead of a pension) that you or your spouse are eligible for at retirement. A government pension is any annuity, pension, or retirement pay from the Federal Government, a State government or political subdivision, or any organization wholly owned by the Federal or State government. Also included as a government pension is any social security benefit. The term government pension does not include workmen's compensation payments or Veterans Administration payments for a service-connected disability or death.

(d) *Amount of reduction because of a government pension.* If you are eligible for a government pension, the amount of the pension will be subtracted from your special age 72 payment. If your spouse is eligible for a government pension but is not entitled to the special payment, your special payment is reduced (after any reduction due to your own government pension) by the difference between the pension amount and the full special payment amount. If both you and your spouse are entitled to the special payment, each spouse's payment is first reduced by the amount of his or her own government pension (if any). Then, the wife's special payment is reduced by the amount that the husband's government pension exceeds the full special payment. The husband's special payment is also reduced by the amount that the wife's government pension exceeds the full special payment.

(e) *Nonpayment of special age 72 payments when you are not residing in the United States.* No special payment is due you for any month you are not a resident of one of the 50 States, the District of Columbia, or the Northern Mariana Islands. Also, payment to you may not be permitted under the rules in § 404.463 if you are an alien living outside the United States.

[44 FR 34481, June 15, 1979, as amended at 49 FR 24116, June 12, 1984]

LUMP-SUM DEATH PAYMENT

§ 404.390 General.

If a person is fully or currently insured when he or she dies, a lump-sum death payment of $255 may be paid to the widow or widower of the deceased if he or she was living in the same household with the deceased at the time of his or her death. If the insured is not survived by a widow(er) who meets this

requirement, all or part of the $255 payment may be made to someone else as described in § 404.392.

[44 FR 34481, June 15, 1979, as amended at 48 FR 21929, May 16, 1983; 61 FR 41330, Aug. 8, 1996]

§ 404.391 Who is entitled to the lump-sum death payment as a widow or widower who was living in the same household?

You are entitled to the lump-sum death payment as a widow or widower who was living in the same household if—

(a) You are the widow or widower of the deceased insured individual based upon a relationship described in § 404.345 or § 404.346;

(b) You apply for this payment within two years after the date of the insured's death. You need not apply again if, in the month prior to the death of the insured, you were entitled to wife's or husband's benefits on his or her earnings record; and

(c) You were living in the same household with the insured at the time of his or her death. The term *living in the same household* is defined in § 404.347.

[44 FR 34481, June 15, 1979, as amended at 48 FR 21929, May 16, 1983]

§ 404.392 Who is entitled to the lump-sum death payment when there is no widow(er) who was living in the same household?

(a) *General.* If the insured individual is not survived by a widow(er) who meets the requirements of § 404.391, the lump-sum death payment shall be paid as follows:

(1) To a person who is entitled (or would have been entitled had a timely application been filed) to widow's or widower's benefits (as described in § 404.335) or mother's or father's benefits (as described in § 404.339) on the work record of the deceased worker for the month of that worker's death; or

(2) If no person described in (1) survives, in equal shares to each person who is entitled (or would have been entitled had a timely application been filed) to child's benefits (as described in § 404.350) on the work record of the deceased worker for the month of that worker's death.

(b) *Application requirement.* A person who meets the requirements of paragraph (a)(1) of this section need not apply to receive the lump-sum death payment if, for the month prior to the death of the insured, that person was entitled to wife's or husband's benefits on the insured's earnings record. Otherwise, an application must be filed within 2 years of the insured's death.

[48 FR 21929, May 16, 1983; 61 FR 41330, Aug. 8, 1996]

Subpart E—Deductions; Reductions; and Nonpayments of Benefits

AUTHORITY: Secs. 202, 203, 204(a) and (e), 205(a) and (c), 216(l), 222(c), 223(e), 224, 225, 702(a)(5), and 1129A of the Social Security Act (42 U.S.C. 402, 403, 404(a) and (e), 405(a) and (c), 416(l), 422(c), 423(e), 424a, 425, 902(a)(5), and 1320a–8a and 48 U.S.C. 1801.

SOURCE: 32 FR 19159, Dec. 20, 1967, unless otherwise noted.

§ 404.401 Deduction, reduction, and nonpayment of monthly benefits or lump-sum death payments.

Under certain conditions, the amount of a monthly insurance benefit (see §§ 404.380 through 404.384 of this part for provisions concerning special payments at age 72) or the lump-sum death payment as calculated under the pertinent provisions of sections 202 and 203 of the Act (including reduction for age under section 202(q) of a monthly benefit) must be increased or decreased to determine the amount to be actually paid to a beneficiary. Increases in the amount of a monthly benefit or lump-sum death payment are based upon recomputation and recalculations of the primary insurance amount (see subpart C of this part). A decrease in the amount of a monthly benefit or lump-sum death payment is required in the following instances:

(a) *Reductions.* A reduction of a person's monthly benefit is required where:

(1) The total amount of the monthly benefits payable on an earnings record exceeds the maximum that may be paid (see § 404.403);

(2) An application for monthly benefits is effective for a month during a retroactive period, and the maximum

has already been paid for that month or would be exceeded if such benefit were paid for that month (see § 404.406);

(3) An individual is entitled to old-age or disability insurance benefits in addition to any other monthly benefit (see § 404.407);

(4) An individual under age 65 is concurrently entitled to disability insurance benefits and to certain public disability benefits (see § 404.408);

(5) An individual is entitled in a month to a widow's or widower's insurance benefit that is reduced under section 202 (e)(4) or (f)(5) of the Act and to any other monthly insurance benefit other than an old-age insurance benefit (see § 404.407(b)); or

(6) An individual is entitled in a month to old-age, disability, wife's, husband's, widow's, or widower's insurance benefit and reduction is required under section 202(q) of the Act (see § 404.410).

(b) *Deductions.* A deduction from a monthly benefit or a lump-sum death payment may be required because of:

(1) An individual's earnings or work (see §§ 404.415 and 404.417);

(2) Failure of certain beneficiaries receiving wife's or mother's insurance benefits to have a child in her care (see § 404.421);

(3) The earnings or work of an old-age insurance beneficiary where a wife, husband, or child is also entitled to benefits (see §§ 404.415 and 404.417);

(4) Failure to report within the prescribed period either certain work outside the United States or not having the care of a child (see § 404.451);

(5) Failure to report within the prescribed period earnings from work in employment or self-employment (*see* § 404.453); or

(6) Certain taxes which were neither deducted from the wages of maritime employees nor paid to the Federal Government (see § 404.457).

(c) *Adjustments.* We may adjust your benefits to correct errors in payments under title II of the Act. We may also adjust your benefits if you received more than the correct amount due under titles VIII or XVI of the Act. For the title II rules on adjustment to your benefits, see subpart F of this part. For the rules on adjusting your benefits to recover title VIII overpayments, see § 408.930 of this chapter. For the rules on adjusting your benefits to recover title XVI overpayments, see § 416.572 of this chapter.

(d) *Nonpayments.* Nonpayment of monthly benefits may be required because:

(1) The individual is an alien who has been outside the United States for more than 6 months (see § 404.460);

(2) The individual on whose earnings record entitlement is based has been deported (see § 404.464);

(3) The individual is engaged in substantial gainful activity while entitled to disability insurance benefits based on ''statutory blindness'' (see § 404.467); or

(4) The individual has not provided satisfactory proof that he or she has a Social Security number or has not properly applied for a Social Security number (see § 404.469).

(e) *Recalculation.* A reduction by recalculation of a benefit amount may be prescribed because an individual has been convicted of certain offenses (see § 404.465) or because the primary insurance amount is recalculated (see subpart C of this part).

(f) *Suspensions.* Suspension of monthly benefits may be required pursuant to section 203(h)(3) of the Act (the Social Security Administration has information indicating that work deductions may reasonably be expected for the year), or pursuant to section 225 of the Act (the Social Security Administration has information indicating a beneficiary is no longer disabled).

[40 FR 30813, July 23, 1975, as amended at 48 FR 37016, Aug. 16, 1983; 56 FR 41789, Aug. 23, 1991; 65 FR 16813, Mar. 30, 2000; 66 FR 38906, July 26, 2001; 68 FR 40122, July 7, 2003; 69 FR 25955, May 10, 2004]

§ 404.401a When we do not pay benefits because of a disability beneficiary's work activity.

If you are receiving benefits because you are disabled or blind as defined in title II of the Social Security Act, we will stop your monthly benefits even though you have a disabling impairment (§ 404.1511), if you engage in substantial gainful activity during the reentitlement period (§ 404.1592a) following completion of the trial work period (§ 404.1592). You will, however, be

paid benefits for the first month after the trial work period in which you do substantial gainful activity and the two succeeding months, whether or not you do substantial gainful activity in those two months. If anyone else is receiving monthly benefits based on your earnings record, that individual will not be paid benefits for any month for which you cannot be paid benefits during the reentitlement period. Except as provided in § 404.471, earnings from work activity during a trial work period will not stop your benefits.

[49 FR 22271, May 29, 1984, as amended at 58 FR 64883, Dec. 10, 1993; 71 FR 66865, Nov. 17, 2006]

§ 404.402 Interrelationship of deductions, reductions, adjustments, and nonpayment of benefits.

(a) *Deductions, reductions, adjustment.* Deductions because of earnings or work (*see* §§ 404.415 and 404.417); failure to have a child ''in his or her care'' (*see* § 404.421); as a penalty for failure to timely report noncovered work outside the United States, failure to report that he or she no longer has a child ''in his or her care,'' or failure to timely report earnings (*see* §§ 404.451 and 404.453); because of unpaid maritime taxes (*see* § 404.457); or nonpayments because of drug addiction and alcoholism to individuals other than an insured individual who are entitled to benefits on the insured individual's earnings record are made:

(1) Before making any reductions because of the *maximum* (see § 404.403),

(2) Before applying the benefit *rounding* provisions (see § 404.304(f)), and,

(3) Except for deductions imposed as a penalty (see §§ 404.451 and 404.453), before making any adjustment necessary because an error has been made in the payment of benefits (see subpart F). However, for purposes of charging excess earnings for taxable years beginning after December 1960 or ending after June 1961, see paragraph (b) of this section and § 404.437 for reductions that apply before such charging.

(b) *Reductions, nonpayments.* (1) Reduction because of the *maximum* (see § 404.403) is made:

(i) Before reduction because of simultaneous entitlement to old-age or disability insurance benefits and to other benefits (see § 404.407);

(ii) Before reduction in benefits for age (see §§ 404.410 through 404.413);

(iii) Before adjustment necessary because an error has been made in the payment of benefits (see subpart F of this part);

(iv) Before reduction because of entitlement to certain public disability benefits provided under Federal, State, or local laws or plans (see § 404.408);

(v) Before nonpayment of an individual's benefits because he is an alien living outside the United States for 6 months (see § 404.460), or because of deportation (see § 404.464);

(vi) Before the redetermination of the amount of benefit payable to an individual who has been convicted of certain offenses (see § 404.465); and

(vii) Before suspension of benefits due to earnings (see § 404.456), for benefits payable or paid for months after December 1995 to a non-working auxiliary or survivor who resides in a different household than the working auxiliary or survivor whose benefits are suspended.

(2) Reduction of benefits because of entitlement to certain public disability benefits (*see* § 404.408) is made before deduction under section 203 of the Act relating to work (*see* §§ 404.415, 404.417, 404.451, and 404.453) and failure to have care of a child (*see* §§ 404.421 and 404.451).

(3) Reduction of the benefit of a spouse who is receiving a Government pension (see § 404.408(a)) is made after the withholding of payments as listed in paragraph (d)(1) of this section and after reduction because of receipt of certain public disability benefits (paragraph (b)(2) of this section).

(c) *Alien outside the United States; deportation nonpayment—deduction.* If an individual is subject to nonpayment of a benefit for a month under § 404.460 or § 404.464, no deduction is made from his benefit for that month under § 404.415, § 404.417, or § 404.421, and no deduction is made because of that individual's work from the benefit of any person entitled or deemed entitled to benefits under § 404.420, on his earnings record, for that month.

(d) *Order of priority—deductions and other withholding provisions.* Deductions

and other withholding provisions are applied in accordance with the following order of priority:

(1) Current nonpayments under §§ 404.460, 404.464, 404.465, 404.467, and 404.469;

(2) Current reductions under § 404.408;

(3) Current reductions under § 404.408a;

(4) Current deductions under §§ 404.417 and 404.421;

(5) Current withholding of benefits under § 404.456;

(6) Unpaid maritime tax deductions (§ 404.457);

(7) Withholdings to recover overpayments (see subpart F of this part);

(8) Penalty deductions under §§ 404.451 and 404.453.

[40 FR 30813, July 23, 1975, as amended at 44 FR 29047, May 18, 1979; 48 FR 37016, Aug. 16, 1983; 48 FR 46148, Oct. 11, 1983; 56 FR 41789, Aug. 23, 1991; 60 FR 8146, Feb. 10, 1995; 68 FR 15659, Apr. 1, 2003; 68 FR 40122, July 7, 2003]

§ 404.403 Reduction where total monthly benefits exceed maximum family benefits payable.

(a) *General.* (1) The Social Security Act limits the amount of monthly benefits that can be paid for any month based on the earnings of an insured individual. If the total benefits to which all persons are entitled on one earnings record exceed a maximum amount prescribed by law, then those benefits must be reduced so that they do not exceed that maximum.

(2) The method of determining the total benefits payable (the *family maximum*) depends on when the insured individual died or became eligible, whichever is earlier. For purposes of this section, the year in which the insured individual becomes eligible refers generally to the year in which the individual attains age 62 or becomes disabled. However, where eligibility or death is in 1979 or later, the year of death, attainment of age 62, or beginning of current disability does not control if the insured individual was entitled to a disability benefit within the 12 month period preceding current eligibility or death. Instead the year in which the individual became eligible for the former disability insurance benefit is the year of eligibility.

(3) The benefits of an individual entitled as a divorced spouse or surviving divorced spouse will not be reduced pursuant to this section. The benefits of all other individuals entitled on the same record will be determined under this section as if no such divorced spouse or surviving divorced spouse were entitled to benefits.

(4) In any case where more than one individual is entitled to benefits as the spouse or surviving spouse of a worker for the same month, and at least one of those individuals is entitled based on a marriage not valid under State law (see §§ 404.345 and 404.346), the benefits of the individual whose entitlement is based on a valid marriage under State law will not be reduced pursuant to this section. The benefits of all other individuals entitled on the same record (unless excluded by paragraph (a)(3) of this section) will be determined under this section as if such validly married individual were not entitled to benefits.

(5) When a person entitled on a worker's earnings record is also entitled to benefits on another earnings record, we consider only the amount of benefits actually due or payable on the worker's record to the dually-entitled person when determining how much to reduce total monthly benefits payable on the worker's earnings record because of the maximum. We do not include, in total benefits payable, any amount not paid because of that person's entitlement on another earnings record (see § 404.407). The effect of this provision is to permit payment of up to the full maximum benefits to other beneficiaries who are not subject to a deduction or reduction. (See § 404.402 for other situations where we apply deductions or reductions before reducing total benefits for the maximum.)

Example 1: A wage earner, his wife and child are entitled to benefits. The wage earner's primary insurance amount is $600.00. His maximum is $900.00. Due to the maximum limit, the monthly benefits for the wife and child must be reduced to $150.00 each. Their original benefit rates are $300.00 each.

Maximum—$900.00
Subtract primary insurance amount—$600.00
Amount available for wife and child—$300.00
Divide by 2—$150.00 each for wife and child

The wife is also entitled to benefits on her own record of $120.00 monthly. This reduces

her wife's benefit to $30.00. The following table illustrates this calculation.

Wife's benefit, reduced for maximum—$150.00
Subtract reduction due to dual entitlement—$120.00
Wife's benefit—$30.00

In computing the total benefits payable on the record, we disregard the $120.00 we cannot pay the wife. This allows us to increase the amount payable to the child to $270.00. The table below shows the steps in our calculation.

Amount available under maximum—$300.00
Subtract amount due wife after reduction due to entitlement to her own benefit—$30.00
Child's benefit—$270.00

Example 2: A wage earner, his wife and 2 children are entitled to benefits. The wage earner's primary insurance amount is $1,250.00. His maximum is $2,180.00. Due to the maximum limit, the monthly benefits for the wife and children must be reduced to $310.00 each. Their original rates (50 percent of the worker's benefit) are $625.00 each. The following shows the calculation.

Maximum—$2,180.00
Subtract primary insurance amount—$1,250.00
Amount available for wife and children—$930.00
Divide by 3—$310 each for wife and children

The children are also entitled to benefits on their own records. Child one is entitled to $390.00 monthly and child two is entitled to $280.00 monthly. This causes a reduction in the benefit to child one to 0.00 and the benefit to child two to $30.00. Again, the following illustrates the calculation.

Benefit payable to child 1 reduced for maximum—$310.00
Subtract reduction due to dual entitlement—$390.00
Benefit payable to child 1—$0.00
Benefit payable to child 2, reduced for maximum—$310.00
Subtract reduction for dual entitlement—$280.00
Benefit payable to child 2—$30.00

In computing the total benefits payable on the record, we consider only the benefits actually paid to the children, or $30. This allows payment of an additional amount to the wife, increasing her benefit to $625.00. This is how the calculation works.

Amount available under maximum for wife and children—$930.00
Subtract amount due children after reduction due to entitlement to their own benefits—$30.00
Amount available for wife—$900.00
Amount payable to wife (original benefit)—$625.00

Example 3: A wage earner, his wife and 4 children are entitled to benefits. The wage earner's primary insurance amount is $1,250.00. His maximum is $2,180.00. Due to the maximum limit, the monthly benefits for the wife and children must be reduced to $186.00 each. Their original rates are $625.00 each. This is how the calculation works.

Maximum—$2,180.00
Subtract primary insurance amount—$1,250.00
Amount available for wife and children—$930.00
Divide by 5—$186.00 each for wife and four children

Two children are also entitled to benefits on their own records. Child one is entitled to $390.00 monthly and child two is entitled to $280.00 monthly. This causes a reduction in the benefit to child one to $0.00 and the benefit to child two to $0.00. This calculation is as follows.

Benefit to child 1, reduced for maximum—$186.00
Subtract reduction due to dual entitlement—$390.00
Benefit payable to child 1—$0.00

Benefit to child 2, reduced for maximum—$186.00
Subtract reduction for dual entitlement—$280.00
Benefit payable to child two—$0.00

In computing the total benefits payable on the record, we disregard the $372.00 we cannot pay the children. This allows payment of an additional amount to the wife, and the two remaining children as follows:

Amount available under maximum for wife and children—$930.00
Subtract amount due child one and child two after reduction due to entitlement to their own benefits—$0.00
Amount available for wife and the other two children—$930.00
Amount payable to the wife and each of the remaining two children—$310.00

(b) *Eligibility or death before 1979.* Where more than one individual is entitled to monthly benefits for the same month on the same earnings record, a reduction in the total benefits payable for that month may be required (except in cases involving a *saving clause*—see § 404.405) if the maximum family benefit is exceeded. The maximum is exceeded if the total of the monthly benefits exceeds the amount appearing in column V of the applicable table in section 215(a) of the Act on the line on which appears in column IV the primary insurance amount of the insured individual whose earnings record is the basis for the benefits payable. Where the maximum is exceeded, the total

benefits for each month after 1964 are reduced to the amount appearing in column V. However, when any of the persons entitled to benefits on the insured individual's earnings would, except for the limitation described in § 404.353(b), be entitled to child's insurance benefits on the basis of the earnings record of one or more other insured individuals, the total benefits payable may not be reduced to less than the smaller of—

(1) The sum of the maximum amounts of benefits payable on the basis of the earnings records of all such insured individuals, or

(2) The last figure in column V of the applicable table in (or deemed to be in) section 215(a) of the Act. The *applicable* table refers to the table which is effective for the month the benefit is payable.

(c) *Eligible for old-age insurance benefits or dies in 1979.* If an insured individual becomes eligible for old-age insurance benefits or dies in 1979, the monthly maximum is as follows—

(1) 150 percent of the first $230 of the individual's primary insurance amount, plus

(2) 272 percent of the primary insurance amount over $230 but not over $332, plus

(3) 134 percent of the primary insurance amount over $332 but not over $433, plus

(4) 175 percent of the primary insurance amount over $433.

If the total of this computation is not a multiple of $0.10, it will be rounded to the next lower multiple of $0.10.

(d) *Eligible for old-age insurance benefits or dies after 1979.* (1) If an insured individual becomes eligible for old-age insurance benefits or dies after 1979, the monthly maximum is computed as in paragraph (c) of this section. However, the dollar amounts shown there will be updated each year as average earnings rise. This updating is done by first dividing the average of the total wages (see § 404.203(m)) for the second year before the individual dies or becomes eligible, by the average of the total wages for 1977. The result of that computation is then multiplied by each dollar amount in the formula in paragraph (c) of this section. Each updated dollar amount will be rounded to the nearer dollar; if the amount is an exact multiple of $0.50 (but not of $1), it will be rounded to the next higher $1.

(2) Before November 2 of each calendar year after 1978, the Commissioner will publish in the FEDERAL REGISTER the formula and updated dollar amounts to be used for determining the monthly maximum for the following year.

(d–1) *Entitled to disability insurance benefits after June 1980.* If you first become eligible for old-age or disability insurance benefits after 1978 and first entitled to disability insurance benefits after June 1980, we compute the monthly family maximum under a formula which is different from that in paragraphs (c) and (d) of this section. The computation under the new formula is as follows:

(1) We take 85 percent of your average indexed monthly earnings and compare that figure with your primary insurance amount (see § 404.212 of this part). We work with the larger of these two amounts.

(2) We take 150 percent of your primary insurance amount.

(3) We compare the results of paragraphs (d–1) (1) and (2) of this section. The smaller amount is the monthly family maximum. As a result of this rule, the entitled spouse and children of some workers will not be paid any benefits because the family maximum does not exceed the primary insurance amount.

(e) *Person entitled on more than one record during years after 1978 and before 1984.* (1) If any of the persons entitled to monthly benefits on the earnings record of an insured individual would, except for the limitation described in § 404.353(b), be entitled to child's insurance benefits on the earnings record of one or more other insured individuals, the total benefits payable may not be reduced to less than the smaller of—(i) the sum of the maximum amounts of benefits payable on the earnings records of all the insured individuals, or (ii) 1.75 times the highest primary insurance amount possible for that month based on the average indexed monthly earnings equal to one-twelfth of the contribution and benefit base determined for that year.

(2) If benefits are payable on the earnings of more than one individual and the primary insurance amount of one of the insured individuals was computed under the provisions in effect before 1979 and the primary insurance amount of the others was computed under the provisions in effect after 1978, the maximum monthly benefits cannot be more than the amount computed under paragraph (e)(1) of this section.

(f) *Person entitled on more than one record for years after 1983.* (1) If any person for whom paragraphs (c) and (d) would apply is entitled to monthly benefits on the earnings record of an insured individual would, except for the limitation described in § 404.353(b), be entitled to child's insurance benefits on the earnings record of one or more other insured individuals, the total benefits payable to all persons on the earnings record of any of those insured individuals may not be reduced to less than the smaller of:

(i) The sum of the maximum amounts of benefits payable on the earnings records of all the insured individuals, or

(ii) 1.75 times the highest primary insurance amount possible for January 1983, or if later, January of the year that the person becomes entitled or reentitled on more than one record.

This highest primary insurance amount possible for that year will be based on the average indexed monthly earnings equal to one-twelfth of the contribution and benefit base determined for that year. Thereafter, the total monthly benefits payable to persons on the earnings record of those insured individuals will then be increased only when monthly benefits are increased because of cost-of-living adjustments (see § 404.270ff).

(2) If benefits are payable on the earnings of more than one individual and the primary insurance amount of one of the insured individuals was computed under the provisions in effect before 1979 and the primary insurance amount of the other was computed under the provisions in effect after 1978, the maximum monthly benefits cannot be more than the amount computed under paragraph (f)(1) of this section.

(g) *Person previously entitled to disability insurance benefits.* If an insured individual who was previously entitled to disability insurance benefits becomes entitled to a ''second entitlement'' as defined in § 404.250, or dies, after 1995, and the insured individual's primary insurance amount is determined under §§ 404.251(a)(1), 404.251(b)(1), or 404.252(b), the monthly maximum during the second entitlement is determined under the following rules:

(1) If the primary insurance amount is determined under §§ 404.251(a)(1) or 404.251(b)(1), the monthly maximum equals the maximum in the last month of the insured individual's earlier entitlement to disability benefits, increased by any cost-of-living or ad hoc increases since then.

(2) If the primary insurance amount is determined under § 404.252(b), the monthly maximum equals the maximum in the last month of the insured individual's earlier entitlement to disability benefits.

(3) Notwithstanding paragraphs (g)(1) and (g)(2) of this section, if the second entitlement is due to the insured individual's retirement or death, and the monthly maximum in the last month of the insured individual's earlier entitlement to disability benefits was computed under paragraph (d–1) of this section, the monthly maximum is equal to the maximum that would have been determined for the last month of such earlier entitlement if computed without regard for paragraph (d–1) of this section.

[45 FR 1611, Jan. 8, 1980, as amended at 46 FR 25601, May 8, 1981; 48 FR 46148, Oct. 11, 1983; 51 FR 12606, Apr. 14, 1986; 58 FR 64892, Dec. 10, 1993; 62 FR 38450, July 18, 1997; 64 FR 17101, Apr. 8, 1999; 64 FR 57775, Oct. 27, 1999; 65 FR 16813, Mar. 30, 2000]

§ 404.404 How reduction for maximum affects insured individual and other persons entitled on his earnings record.

If a reduction of monthly benefits is required under the provisions of § 404.403, the monthly benefit amount of each of the persons entitled to a monthly benefits on the same earnings record (with the exception of the individual entitled to old-age or disability insurance benefits) is proportionately

reduced so that the total benefits that can be paid in 1 month (including an amount equal to the primary insurance amount of the old-age or disability insurance beneficiary, when applicable) does not exceed the maximum family benefit (except as provided in § 404.405 where various savings clause provisions are described).

§ 404.405 Situations where total benefits can exceed maximum because of "savings clause."

The following provisions are *savings clauses* and describe exceptions to the rules concerning the maximum amount payable on an individual's earnings record in a month as described in § 404.403. The effect of a *savings clause* is to avoid lowering benefit amounts or to guarantee minimum increases to certain persons entitled on the earnings record of the insured individual when a statutory change has been made that would otherwise disadvantage them. The reduction described in § 404.403 does not apply in the following instances:

(a)–(m) [Reserved]

(n) *Months after August 1972.* The reduction described in § 404.403(a) shall not apply to benefits for months after August 1972 where two or more persons were entitled to benefits for August 1972 based upon the filing of an application in August 1972 or earlier and the total of such benefits was subject to reduction for the maximum under § 404.403 (or would have been subject to such reduction except for this paragraph) for January 1971. In such a case, maximum family benefits on the insured individual's earnings record for any month after August 1972 may not be less than the larger of:

(1) The maximum family benefits for such month determined under the applicable table in section 215(a) of the Act (the *applicable* table in section 215(a) is that table which is effective for the month the benefit is payable or in the case of a lump-sum payment, the month the individual died); or

(2) The total obtained by multiplying each benefit for August 1972 after reduction for the maximum but before deduction or reduction for age, by 120 percent and raising each such increased amount, if it is not a multiple of 10 cents, to the next higher multiple of 10 cents.

(o) *Months after December 1972.* The reduction described in § 404.403 shall not apply to benefits for months after December 1972 in the following cases:

(1) In the case of a redetermination of widow's or widower's benefits, the reduction described in § 404.403 shall not apply if:

(i) Two or more persons were entitled to benefits for December 1972 on the earnings records of a deceased individual and at least one such person is entitled to benefits as the deceased individual's widow or widower for December 1972 and for January 1973; and

(ii) The total of benefits to which all persons are entitled for January 1973 is reduced (or would be reduced if deductions were not applicable) for the maximum under § 404.403.

In such case, the benefit of each person referred to in paragraph (o)(1)(i) of this section for months after December 1972 shall be no less than the amount it would have been if the widow's or widower's benefit had not been redetermined under the Social Security Amendments of 1972.

(2) In the case of entitlement to child's benefits based upon disability which began between ages 18 and 22 the reduction described in § 404.403 shall not apply if:

(i) One or more persons were entitled to benefits on the insured individual's earnings record for December 1972 based upon an application filed in that month or earlier; and

(ii) One or more persons not included in paragraph (o)(2)(i) of this section are entitled to child's benefits on that earnings record for January 1973 based upon disability which began in the period from ages 18 to 22; and

(iii) The total benefits to which all persons are entitled on that record for January 1973 is reduced (or would be reduced if deductions were not applicable) for the maximum under § 404.403.

In such case, the benefit of each person referred to in paragraph (o)(2)(i) of this section for months after December 1972 shall be no less than the amount it would have been if the person entitled to child's benefits based upon disability in the period from ages 18 to 22 were not so entitled.

(3) In the case of entitlement of certain surviving divorced mothers, the reduction described in § 404.403 shall not apply if:

(i) One or more persons were entitled to benefits on the insured individual's earnings record for December 1972 based upon an application filed in December 1972 or earlier; and

(ii) One or more persons not included in paragraph (o)(3)(i) of this section are entitled to benefits on that earnings record as a surviving divorced mother for a month after December 1972; and

(iii) The total of benefits to which all persons are entitled on that record for any month after December 1972 is reduced (or would be reduced if deductions were not applicable) for the maximum under § 404.403.

In such case, the benefit of each such person referred to in paragraph (o)(3)(i) of this section for months after December 1972 in which any person referred to in paragraph (o)(3)(ii) of this section is entitled shall be no less than it would have been if the person(s) referred to in paragraph (o)(3)(ii) of this section had not become entitled to benefits.

(p) *Months after December 1973.* The reduction described in § 404.403 shall not apply to benefits for months after December 1973 where two or more persons were entitled to monthly benefits for January 1971 or earlier based upon applications filed in January 1971 or earlier, and the total of such benefits was subject to reduction for the maximum under § 404.403 for January 1971 or earlier. In such a case, maximum family benefits payable on the insured individual's earnings record for any month after January 1971 may not be less than the larger of:

(1) The maximum family benefit for such month shown in the applicable table in section 215(a) of the Act (the *applicable* table in section 215(a) of the Act is that table which is effective for the month the benefit is payable or in the case of a lump-sum payment, the month the individual died); or

(2) The largest amount which has been determined payable for any month for persons entitled to benefits on the insured individual's earnings records; or

(3) In the case of persons entitled to benefits on the insured individual's earnings record for the month immediately preceding the month of a general benefit or cost-of-living increase after September 1972, an amount equal to the sum of the benefit amount for each person (excluding any part of an old-age insurance benefit increased because of delayed retirement under the provisions of § 404.305(a) for the month immediately before the month of increase in the primary insurance amount (after reduction for the family maximum but before deductions or reductions for age) multiplied by the percentage of increase. Any such increased amount, if it is not a multiple of $0.10, will be raised to the next higher multiple of $0.10 for months before June 1982 and reduced to the next lower multiple of $0.10 for months after May 1982.

(q) *Months after May 1978.* The *family maximum* for months after May 1978 is figured for all beneficiaries just as it would have been if none of them had gotten a benefit increase because of the retirement credit if:

(1) One or more persons were entitled (without the reduction required by § 404.406) to monthly benefits for May 1978 on the wages and self-employment income of a deceased wage earner;

(2) The benefit for June 1978 of at least one of those persons is increased by reason of a delayed retirement credit (see § 404.330(b)(4) or § 404.333(b)(4)); and

(3) The total amount of monthly benefits to which all those persons are entitled is reduced because of the maximum or would be so reduced except for certain restrictions (see § 404.403 and § 404.402(a)).

[32 FR 19159, Dec. 20, 1967, as amended at 40 FR 30814, July 23, 1975; 43 FR 8132, Feb. 28, 1978; 43 FR 29277, July 7, 1978; 48 FR 46148, Oct. 11, 1983]

§ 404.406 Reduction for maximum because of retroactive effect of application for monthly benefits.

Under the provisions described in § 404.403, beginning with the month in which a person files an application and becomes entitled to benefits on an insured individual's earnings record, the benefit rate of other persons entitled on the same earnings record (aside from the individual on whose earnings

record entitlement is based) are adjusted downward, if necessary, so that the maximum benefits payable on one earnings record will not be exceeded. An application may also be effective (retroactively) for benefits for months before the month of filing (see § 404.603). For any month before the month of filing, however, benefits that have been previously certified by the Administration for payment to other persons (on the same earnings record) are not changed. Rather, the benefit payment of the person filing the application in the later month is reduced for each month of the retroactive period to the extent that may be necessary, so that no earlier payment to some other person is made erroneous. This means that for each month of the retroactive period the amount payable to the person filing the later application is the difference, if any, between (a) the total amount of benefits actually certified for payment to other persons for that month, and (b) the maximum amount of benefits payable for that month to all persons, including the person filing later.

[32 FR 19159, Dec. 20, 1967, as amended at 64 FR 14608, Mar. 26, 1999]

§ 404.407 Reduction because of entitlement to other benefits.

(a) *Entitlement to old-age or disability insurance benefit and other monthly benefit.* If an individual is entitled to an old-age insurance benefit or disability insurance benefit for any month after August 1958 and to any other monthly benefit payable under the provisions of title II of the Act (see subpart D of this part) for the same month, such other benefit for the month, after any reduction under section 202(q) of the Act because of entitlement to such benefit for months before retirement age and any reduction under section 203(a) of the Act, is reduced (but not below zero) by an amount equal to such old-age insurance benefit (after reduction under section 202(q) of the Act) or such disability insurance benefit, as the case may be.

(b) *Entitlement to widow's or widower's benefit and other monthly benefit.* If an individual is entitled for any month after August 1965 to a widow's or widower's insurance benefit under the provisions of section 202 (e)(4) or (f)(5) of the Act and to any other monthly benefit payable under the provisions of title II of the Act (see subpart D) for the same month, except an old-age insurance benefit, such other insurance benefit for that month, after any reduction under paragraph (a) of this section, any reduction for age under section 202(q) of the Act, and any reduction under the provisions described in section 203(a) of the Act, shall be reduced, but not below zero, by an amount equal to such widow's or widower's insurance benefit after any reduction or reductions under paragraph (a) of this section or section 203(a) of the Act.

(c) *Entitlement to old-age insurance benefit and disability insurance benefit.* Any individual who is entitled for any month after August 1965 to both an old-age insurance benefit and a disability insurance benefit shall be entitled to only the larger of such benefits for such month, except that where the individual so elects, he or she shall instead be entitled to only the smaller of such benefits for such month. Only a person defined in § 404.612 (a), (c), or (d) may make the above described election.

(d) *Child's insurance benefits.* A child may, for any month, be simultaneously entitled to a child's insurance benefit on more than one individual's earnings if all the conditions for entitlement described in § 404.350 are met with respect to each claim. Where a child is simultaneously entitled to child's insurance benefits on more than one earnings record, the general rule is that the child will be paid an amount which is based on the record having the highest primary insurance amount. However, the child will be paid a higher amount which is based on the earnings record having a lower primary insurance amount if no other beneficiary entitled on any record would receive a lower benefit because the child is paid on the record with the lower primary insurance amount. (See § 404.353(b).)

(e) *Entitlement to more than one benefit where not all benefits are child's insurance benefits and no benefit is an old-age or disability insurance benefit.* If an individual (other than an individual to whom section 202 (e)(4) or (f)(5) of the

Act applies) is entitled for any month to more than one monthly benefit payable under the provisions of this subpart, none of which is an old-age or disability insurance benefit and all of which are not child's insurance benefits, only the greater of the monthly benefits to which he would (but for the provisions of this paragraph) otherwise be entitled is payable for such month. For months after August 1965, an individual who is entitled for any month to more than one widow's or widower's insurance benefit to which section 202 (e)(4) or (f)(5) of the Act applies is entitled to only one such benefit for such month, such benefit to be the largest of such benefits.

[32 FR 19159, Dec. 20, 1967, as amended at 51 FR 12606, Apr. 14, 1986; 54 FR 5603, Feb. 6, 1989]

§ 404.408 Reduction of benefits based on disability on account of receipt of certain other disability benefits provided under Federal, State, or local laws or plans.

(a) *When reduction required.* Under section 224 of the Act, a disability insurance benefit to which an individual is entitled under section 223 of the Act for a month (and any monthly benefit for the same month payable to others under section 202 on the basis of the same earnings record) is reduced (except as provided in paragraph (b) of this section) by an amount determined under paragraph (c) of this section if:

(1) The individual first became entitled to disability insurance benefits after 1965 but before September 1981 based on a period of disability that began after June 1, 1965, and before March 1981, and

(i) The individual entitled to the disability insurance benefit is also entitled to periodic benefits under a workers' compensation law or plan of the United States or a State for that month for a total or partial disability (whether or not permanent), and

(ii) The Commissioner has, in a month before that month, received a notice of the entitlement, and

(iii) The individual has not attained age 62, or

(2) The individual first became entitled to disability insurance benefits after August 1981 based on a disability that began after February 1981, and

(i) The individual entitled to the disability insurance benefit is also, for that month, concurrently entitled to a periodic benefit (including workers' compensation or any other payments based on a work relationship) on account of a total or partial disability (whether or not permanent) under a law or plan of the United States, a State, a political subdivision, or an instrumentality of two or more of these entities, and

(ii) The individual has not attained age 65.

(b) *When reduction not made.* (1) The reduction of a benefit otherwise required by paragraph (a)(1) of this section is not made if the workers' compensation law or plan under which the periodic benefit is payable provides for the reduction of such periodic benefit when anyone is entitled to a benefit under title II of the Act on the basis of the earnings record of an individual entitled to a disability insurance benefit under section 223 of the Act.

(2) The reduction of a benefit otherwise required by paragraph (a)(2) of this section is not to be made if:

(i) The law or plan under which the periodic public disability benefit is payable provides for the reduction of that benefit when anyone is entitled to a benefit under title II of the Act on the basis of the earnings record of an individual entitled to a disability insurance benefit under section 223 of the Act and that law or plan so provided on February 18, 1981. (The reduction required by paragraph (a)(2) of this section will not be affected by public disability reduction provisions not actually in effect on this date or by changes made after February 18, 1981, to provisions that were in effect on this date providing for the reduction of benefits previously not subject to a reduction); or

(ii) The benefit is a Veterans Administration benefit, a public disability benefit (except workers' compensation) payable to a public employee based on employment covered under Social Security, a public benefit based on need, or a wholly private pension or private insurance benefit.

(c) *Amount of reduction*—(1) *General.* The total of benefits payable for a month under sections 223 and 202 of the Act to which paragraph (a) of this section applies is reduced monthly (but not below zero) by the amount by which the sum of the monthly disability insurance benefits payable on the disabled individual's earnings record and the other public disability benefits payable for that month exceeds the higher of:

(i) Eighty percent of his *average current earnings,* as defined in paragraph (c)(3) of this section, or

(ii) The total of such individual's disability insurance benefit for such month and all other benefits payable for such month based on such individual's earnings record, prior to reduction under this section.

(2) *Limitation on reduction.* In no case may the total of monthly benefits payable for a month to the disabled worker and to the persons entitled to benefits for such month on his earnings record be less than:

(i) The total of the benefits payable (after reduction under paragraph (a) of this section) to such beneficiaries for the first month for which reduction under this section is made, and

(ii) Any increase in such benefits which is made effective for months after the first month for which reduction under this section is made.

(3) *Average current earnings defined.* (i) Beginning January 1, 1979, for purposes of this section, an individual's *average current earnings* is the largest of either paragraph (c)(3)(i) (*a*), (*b*) or (*c*) of this section (after reducing the amount to the next lower multiple of $1 when the amount is not a multiple of $1):

(A) The average monthly wage (determined under section 215(b) of the Act as in effect prior to January 1979) used for purposes of computing the individual's disability insurance benefit under section 223 of the Act;

(B) One-sixtieth of the total of the individual's wages and earnings from self-employment, without the limitations under sections 209(a) and 211(b)(1) of the Act (see paragraph (c)(3)(ii) of this section), for the 5 consecutive calendar years after 1950 for which the wages and earnings from self-employment were highest; or

(C) One-twelfth of the total of the individual's wages and earnings from self-employment, without the limitations under sections 209(a) and 211(b)(1) of the Act (see paragraph (c)(3)(ii) of this section), for the calendar year in which the individual had the highest wages and earnings from self-employment during the period consisting of the calendar year in which the individual became disabled and the 5 years immediately preceding that year. Any amount so computed which is not a multiple of $1 is reduced to the next lower multiple of $1.

(ii) *Method of determining calendar year earnings in excess of the limitations under sections 209(a) and 211(b)(1) of the Act.* For the purposes of paragraph (c)(3)(i) of this section, the extent by which the wages or earnings from self-employment of an individual exceed the maximum amount of earnings creditable under sections 209(a) and 211(b)(1) of the Act in any calendar year after 1950 and before 1978 will ordinarily be estimated on the basis of the earnings information available in the records of Administration. (See subpart I of this part.) If an individual provides satisfactory evidence of his actual earnings in any year, the extent, if any, by which his earnings exceed the limitations under sections 209(a) and 211(b)(1) of the Act shall be determined by the use of such evidence instead of by the use of estimates.

(4) *Reentitlement to disability insurance benefits.* If an individual's entitlement to disability insurance benefits terminates and such individual again becomes entitled to disability insurance benefits, the amount of the reduction is again computed based on the figures specified in this paragraph (c) applicable to the subsequent entitlement.

(5) *Computing disability insurance benefits.* When reduction is required, the total monthly Social Security disability insurance benefits payable after reduction can be more easily computed by subtracting the monthly amount of the other public disability benefit from the higher of paragraph (c)(1) (i) or (ii). This is the method employed in the examples used in this section.

(d) *Items not counted for reduction.* Amounts paid or incurred, or to be incurred, by the individual for medical,

legal, or related expenses in connection with the claim for public disability payments (see § 404.408 (a) and (b)) or the injury or occupational disease on which the public disability award or settlement agreement is based, are excluded in computing the reduction under paragraph (a) of this section to the extent they are consonant with the applicable Federal, State, or local law or plan and reflect either the actual amount of expenses already incurred or a reasonable estimate, given the circumstances in the individual's case, of future expenses. Any expenses not established by evidence required by the Administration or not reflecting a reasonable estimate of the individual's actual future expenses will not be excluded. These medical, legal, or related expenses may be evidenced by the public disability award, compromise agreement, a court order, or by other evidence as the Administration may require. This other evidence may consist of:

(1) A detailed statement by the individual's attorney, physician, or the employer's insurance carrier; or

(2) Bills, receipts, or canceled checks; or

(3) Other clear and convincing evidence indicating the amount of expenses; or

(4) Any combination of the foregoing evidence from which the amount of expenses may be determinable.

(e) *Certification by individual concerning eligibility for public disability benefits.* Where it appears that an individual may be eligible for a public disability benefit which would give rise to a reduction under paragraph (a) of this section, the individual may be required, as a condition of certification for payment of any benefit under section 223 of the Act to any individual for any month, and of any benefit under section 202 of the Act for any month based on such individual's earnings record, to furnish evidence as requested by the Administration and to certify as to:

(1) Whether he or she has filed or intends to file any claim for a public disability benefit, and

(2) If he or she has so filed, whether there has been a decision on the claim. The Commissioner may rely, in the absence of evidence to the contrary, upon a certification that he or she has not filed and does not intend to file such a claim, or that he or she has filed and no decision has been made, in certifying any benefit for payment pursuant to section 205(i) of the Act.

(f) *Verification of eligibility or entitlement to a public disability benefit under paragraph (a).* Section 224 of the Act requires the head of any Federal agency to furnish the Commissioner information from the Federal agency's records which is needed to determine the reduction amount, if any, or verify other information to carry out the provisions of this section. The Commissioner is authorized to enter into agreements with States, political subdivisions, and other organizations that administer a law or plan of public disability benefits in order to obtain information that may be required to carry out the provisions of this section.

(g) *Public disability benefit payable on other than a monthly basis.* Where public disability benefits are paid periodically but not monthly, or in a lump sum as a commutation of or a substitute for periodic benefits, such as a compromise and release settlement, the reduction under this section is made at the time or times and in the amounts that the Administration determines will approximate as nearly as practicable the reduction required under paragraph (a) of this section.

(h) *Priorities.* (1) For an explanation of when a reduction is made under this section where other reductions, deductions, etc., are involved, see § 404.402.

(2) Whenever a reduction in the total of benefits for any month based on an individual's earnings record is made under paragraph (a) of this section, each benefit, except the disability insurance benefit, is first proportionately decreased. Any excess reduction over the sum of all the benefits, other than the disability insurance benefit, is then applied to the disability insurance benefit.

Example 1: Effective September 1981, Harold is entitled to a monthly disability primary insurance amount of $507.90 and a monthly public disability benefit of $410.00 from the State. Eighty percent of Harold's average current earnings is $800.00. Because this

amount ($800.00) is higher than Harold's disability insurance benefit ($507.90), we subtract Harold's monthly public disability benefit ($410.00) from eighty percent of his average current earnings ($800.00). This leaves Harold a reduced monthly disability benefit of $390.00.

Example 2: In September 1981, Tom is entitled to a monthly disability primary insurance amount of $559.30. His wife and two children are also entitled to monthly benefits of $93.20 each. The total family benefit is $838.90. Tom is also receiving a monthly workers' compensation benefit of $500.00 from the State. Eighty percent of Tom's average current earnings is $820.10. Because the total family benefit ($838.90) is higher than 80 percent of the average current earnings ($820.10), we subtract the monthly workers' compensation benefit ($500.00) from the total family benefit ($838.90), leaving $338.90 payable. This means the monthly benefits to Tom's wife and children are reduced to zero, and Tom's monthly disability benefit is reduced to $338.90.

(i) *Effect of changes in family composition.* The addition or subtraction in the number of beneficiaries in a family may cause the family benefit to become, or cease to be, the applicable limit for reduction purposes under this section. When the family composition changes, the amount of the reduction is recalculated as though the new number of beneficiaries were entitled for the first month the reduction was imposed. If the applicable limit both before and after the change is 80 percent of the average current earnings and the limitation on maximum family benefits is in effect both before and after the change, the amount payable remains the same and is simply redistributed among the beneficiaries entitled on the same earnings record.

Example 1: Frank is receiving $500.00 a month under the provisions of a State workers' compensation law. He had a prior period of disability which terminated in June 1978. In September 1981, Frank applies for a second period of disability and is awarded monthly disability insurance benefits with a primary insurance amount of $370.20. His child, Doug, qualifies for benefits of $135.10 a month on Frank's earnings record. The total family benefits is $505.30 monthly.

Frank's average monthly wage (as used to compute the primary insurance amount) is $400.00; eighty percent of his average current earnings (computed by using the 5 consecutive years in which his earnings were highest) is $428.80 (80% of $536.00); eighty percent of Frank's average current earnings (computed by using the 1 calendar year in which his earnings were highest) is $509.60 (80% of $637.00). The highest value for 80 percent of average current earnings is therefore $509.60 (80%). Since this is higher than the total family benefit ($505.30), the $509.60 is the applicable limit in determining the amount of the reduction (or offset). The amount payable after the reduction is—

80% of Frank's average current earnings ...	$509.60
Frank's monthly workers' compensation benefit	−500.00
Monthly benefit payable to Frank	9.60

No monthly benefits are payable to Doug because the reduction is applied to Doug's benefit first. In December 1981, another child, Mike, becomes entitled on Frank's earnings record. The monthly benefit to each child before reduction is now $109.10, the amount payable when there are two beneficiaries in addition to the wage earner. Thus, the total family benefit becomes $588.40. Because this is now higher than $509.60 (80% of Frank's average current earnings), $588.40 becomes the applicable limit in determining the amount of reduction. The amount payable after the increase in the total family benefit is—

The new total family benefit	$588.40
Frank's monthly workers' compensation rate	−500.00
Monthly benefit payable to Frank	88.40

No monthly benefits are payable to either child because the reduction (or offset) is applied to the family benefits first.

Example 2: Jack became entitled to disability insurance benefits in December 1973 (12/73), with a primary insurance amount (PIA) of $220.40. He was also receiving a workers' compensation benefit. An offset was imposed against the disability insurance benefit. By June 1977 (6/77), Jack's PIA had increased to $298.00 because of several statutory benefit increases. In December 1977 (12/77), his wife, Helen, attained age 65 and filed for unreduced wife's benefits. (She was not entitled to a benefit on her own earnings record.) This benefit was terminated in May 1978 (5/78), at her death. Helen's benefit was computed back to 12/73 as though she were entitled in the first month that offset was imposed against Jack. Since there were no other beneficiaries entitled and Helen's entire monthly benefit amount is subject to offset, the benefit payable to her for 12/77 through April 1978 (4/78), would be $38.80. This gives Helen the protected statutory benefit increases since 12/73. The table below shows how Helen's benefit was computed beginning with the first month offset was imposed.

Month of entitlement/ statutory increase	Jack's PIA	Helen's benefit prior to offset	Helen's statutory increase
December 1973	$220.40	$110.20	.....
March 1974	236.00	118.00	$7.80
June 1974	244.80	122.40	+4.40
June 1975	264.40	132.20	+9.80
June 1976	281.40	140.70	+8.50
June 1977	298.00	149.00	+8.30
December 1977 through April 1978 [1]	.....	.....	38.80

[1] Monthly benefit payable to Helen.

(j) *Effect of social security disability insurance benefit increases.* Any increase in benefits due to a recomputation or a statutory increase in benefit rates is not subject to the reduction for public disability benefits under paragraph (a) and does not change the amount to be deducted from the family benefit. The increase is simply added to what amount, if any, is payable. If a new beneficiary becomes entitled to monthly benefits on the same earnings record after the increase, the amount of the reduction is redistributed among the new beneficiaries entitled under section 202 of the Act and deducted from their current benefit rate.

Example: In March 1981, Chuck became entitled to disability insurance benefits with a primary insurance amount of $362.40 a month. He has a wife and two children who are each entitled to a monthly benefit of $60.40. Chuck is receiving monthly disability compensation from a worker's compensation plan of $410.00. Eighty percent of his average current earnings is $800.00. Because this is higher than the total family benefit ($543.60), $800.00 is the applicable limit in computing the amount of reduction. The amount of monthly benefits payable after the reduction is—

Applicable limit	$800.00
Chuck's monthly disability compensation	−410.00
Total amount payable to Chuck and the family after reduction	$390.00
Amount payable to Chuck	−362.40
Total amount payable to the family	$27.60
$9.20 payable to each family member equals	$27.60
	3

In June 1981, the disability benefit rates were raised to reflect an increase in the cost-of-living. Chuck is now entitled to $403.00 a month and each family member is entitled to $67.20 a month (an increase of $6.80 to each family member). The monthly amounts payable after the cost-of-living increase are now $403.00 to Chuck and $16.00 to each family member ($9.20 plus the $6.80 increase).

In September 1981, another child becomes entitled to benefits based on Chuck's earnings record. The monthly amount payable to the family (excluding Chuck) must now be divided by 4:

$6.90 payable to each family member equals	$27.60
	4

The June 1981 cost-of-living increase is added to determine the amount payable. Chuck continues to receive $403.00 monthly. Each family member receives a cost-of-living increase of $5.10. Thus, the amount payable to each is $12.00 in September 1981 ($6.90 plus the $5.10 increase). (See Example 2 under (i).)

(k) *Effect of changes in the amount of the public disability benefit.* Any change in the amount of the public disability benefit received will result in a recalculation of the reduction under paragraph (a) and, potentially, an adjustment in the amount of such reduction. If the reduction is made under paragraph (a)(1) of this section, any increased reduction will be imposed effective with the month after the month the Commissioner received notice of the increase in the public disability benefit (it should be noted that only workers' compensation can cause this reduction). Adjustments due to a decrease in the amount of the public disability benefit will be effective with the actual date the decreased amount was effective. If the reduction is made under paragraph (a)(2) of this section, any increase or decrease in the reduction will be imposed effective with the actual date of entitlement to the new amount of the public disability benefit.

Example: In September 1981, based on a disability which began March 12, 1981, Theresa became entitled to Social Security disability insurance benefits with a primary insurance amount of $445.70 a month. She had previously been entitled to Social Security disability insurance benefits from March 1967 through July 1969. She is receiving a temporary total workers' compensation payment of $227.50 a month. Eighty percent of her average current earnings is $610.50. The amount of monthly disability insurance benefit payable after reduction is—

80 percent of Theresa's average current earnings	$610.50
Theresa's monthly workers' compensation payment	−227.50
Total amount payable to Theresa after reduction	383.00

On November 15, 1981, the Commissioner was notified that Theresa's workers' compensation rate was increased to $303.30 a month effective October 1, 1981. This increase reflected a cost-of-living adjustment granted to all workers' compensation recipients in her State. The reduction to her monthly disability insurance benefit is recomputed to take this increase into account—

80 percent of Theresa's average current earnings	$610.50
Theresa's monthly workers' compensation payment beginning October 1, 1981	−303.30
Total new amount payable to Theresa beginning October 1981 after recalculation of the reduction	$307.20

Effective January, 1, 1982, Theresa's workers' compensation payment is decreased to $280.10 a month when she begins to receive a permanent partial payment. The reduction to her monthly disability insurance benefit is again recalculated to reflect her decreased workers' compensation amount—

80 percent of Theresa's average current earnings	$610.50
Theresa's monthly workers' compensation payment beginning January 1, 1982	−280.10
Total new amount payable to Theresa beginning January 1982 after recalculation of the reduction	$330.40

If, in the above example, Theresa had become entitled to disability insurance benefits in August 1981, the increased reduction to her benefit, due to the October 1, 1981 increase in her workers' compensation payment, would have been imposed beginning with December 1981, the month after the month she notified the Social Security Administration of the increase. The later decrease in her workers' compensation payment would still affect her disability insurance benefit beginning with January 1982.

(l) *Redetermination of benefits*—(1) *General*. In the second calendar year after the year in which reduction under this section in the total of an individual's benefits under section 223 of the Act and any benefits under section 202 of the Act based on his or her wages and self-employment income is first required (in a continuous period of months), and in each third year thereafter, the amount of those benefits which are still subject to reduction under this section are redetermined, provided this redetermination does not result in any decrease in the total amount of benefits payable under title II of the Act on the basis of the workers' wages and self-employment income. The redetermined benefit is effective with the January following the year in which the redetermination is made.

(2) *Average current earnings*. In making the redetermination required by paragraph (l)(1) of this section, the individual's average current earnings (as defined in paragraph (c)(3) of this section) is deemed to be the product of his average current earnings as initially determined under paragraph (c)(3) of this section and:

(i) The ratio of the average of the total wages (as defined in § 404.1049) of all persons for whom wages were reported to the Secretary of the Treasury or his delegate for the calendar year before the year in which the redetermination is made, to the average of the total wages of all person reported to the Secretary of the Treasury or his delegate for calendar year 1977 or, if later, the calendar year before the year in which the reduction was first computed (but not counting any reduction made in benefits for a previous period of disability); and

(ii) In any case in which the reduction was first computed before 1978, the ratio of the average of the taxable wages reported to the Commissioner of Social Security for the first calendar quarter of 1977 to the average of the taxable wages reported to the Commissioner of Social Security for the first calendar quarter of the calendar year before the year in which the reduction was first computed (but not counting any reduction made in benefits for a previous period of disability). Any amount determined under the preceding two sentences which is not a multiple of $1 is reduced to the next lower multiple of $1.

(3) *Effect of redetermination*. Where the applicable limit on total benefits previously used was 80 percent of the average current earnings, a redetermination under this paragraph may cause an increase in the amount of benefits payable. Also, where the limit previously used was the total family benefit, the redetermination may cause the average current earnings to exceed the total family benefit and thus become the new applicable limit. If for some other reason (such as a statutory increase or recomputation) the benefit has already been increased to a level

which equals or exceeds the benefit resulting from a redetermination under this paragraph, no additional increase is made. A redetermination is designed to bring benefits into line with current wage levels when no other change in payments has done so.

Example: In October 1978, Alice became entitled to disability insurance benefits with a primary insurance amount of $505.10. Her two children were also entitled to monthly benefits of $189.40 each. Alice was also entitled to monthly disability compensation benefits of $667.30 from the State. Eighty percent of Alice's average current earnings is $1340.80, and that amount is the applicable limit. The amount of monthly benefits payable after the reduction is—

Applicable limit	$1,340.80
Alice's State disability compensation benefit	−667.30
Total benefits payable to Alice and both children after reduction	$673.50
Alice's disability insurance benefit	−505.10
Payable to the children	$168.40
$84.20 payable to each child after reduction equals	$168.40
	2

In June 1979 and June 1980, cost-of-living increases in Social Security benefits raise Alice's benefit by $50.10 (to $555.20) and $79.40 (to $634.60) respectively. The children's benefits (before reduction) are each raised by $18.80 (to $208.20) and $29.80 (to $238.00). These increases in Social Security benefits are not subject to the reduction (*i.e.*, offset).

In 1980, Alice's average current earnings are redetermined as required by law. The offset is recalculated, and if the amount payable to the family is higher than the current amount payable to the family, that higher amount becomes payable the following January (*i.e.*, January 1981). The current amount payable to the family after the reduction is recalculated—

Alice's 1978 benefit after reduction	$505.10
Alice's cost-of-living increase in June 1979	+50.10
Alice's cost-of-living increase in June 1980	+79.40
One child's 1978 benefit after reduction	+84.20
That child's cost-of-living increase in June 1979	+18.70
That child's cost-of-living increase in June 1980	+29.70
The other child's 1978 benefit after reduction	+84.20
The other child's cost-of-living increase in June 1979	+18.70
The other child's cost-of-living increase in June 1980	+29.70
Total amount payable to the family after reduction in January 1981	899.80

The amount payable to the family after reduction is then recalculated using the redetermined average current earnings—

Average current earnings before redetermination	$1,676.00
Redetermination ratio effective for January 1981	×1.174
Redetermined average current earnings	$1,967.00
	×80%
80% of the redetermined average current earnings	$1,573.60
Alice's State disability compensation benefit	−667.30
Total benefits payable to the family after offset	$906.30

We then compare the total amount currently being paid to the family ($899.80) to the total amount payable after the redetermination ($906.30). In this example, the redetermination yields a higher amount and, therefore, becomes payable the following January (*i.e.*, January 1981). Additional computations are required to determine the amount that will be paid to each family member—

Total benefits payable to the family using the redetermined average current earnings	$906.30
Total cost-of-living increases to both children	−96.80
Balance payable	809.50
Alice's current benefit amount before reduction	−634.60
Payable to the children	174.90
Total cost-of-living increases to both children	+96.80
Total payable to children after reduction	271.70
$135.90 (rounded from $135.85) payable to each child equals	$271.70
	2

[32 FR 19159, Dec. 20, 1967; 33 FR 3060, Feb. 16, 1968, as amended at 37 FR 3425, Feb. 16, 1972; 48 FR 37017, Aug. 16, 1983; 48 FR 38814, Aug. 26, 1983; 62 FR 38450, July 18, 1997]

§ 404.408a Reduction where spouse is receiving a Government pension.

(a) *When reduction is required.* Unless you meet one of the exceptions in paragraph (b) of this section, your monthly Social Security benefits as a wife, husband, widow, widower, mother, or father will be reduced each month you are receiving a monthly pension from a Federal, State, or local government agency (Government pension) for which you were employed in work not covered by Social Security on the last day of such employment. Your monthly Social Security benefit as a spouse will always be reduced because of your Government pension even if you afterwards

return to work for a government agency and that work is covered by Social Security. For purposes of this section, Federal Government employees are not considered to be covered by Social Security if they are covered for Medicare but are not otherwise covered by Social Security. If the government pension is not paid monthly or is paid in a lump-sum, we will determine how much the pension would be if it were paid monthly and then reduce the monthly Social Security benefit accordingly. The number of years covered by a lump-sum payment, and thus the period when the Social Security benefit will be reduced, will generally be clear from the pension plan. If one of the alternatives to a lump-sum payment is a life annuity, and the amount of the monthly benefit for the life annuity can be determined, the reduction will be based on that monthly benefit amount. Where the period or the equivalent monthly pension benefit is not clear it may be necessary for us to determine the reduction period on an individual basis.

(b) *Exceptions.* The reduction does not apply:

(1) If you are receiving a Government pension based on employment for an interstate instrumentality.

(2) If you received or are eligible to receive a Government pension for one or more months in the period December 1977 through November 1982 and you meet the requirements for Social Security benefits that were applied in January 1977, even though you don't claim benefits, and you don't actually meet the requirements for receiving benefits until a later month. The January 1977 requirements are, for a man, a one-half support test (see paragraph (c) of this section), and, for a woman claiming benefits as a divorced spouse, marriage for at least 20 years to the insured worker. You are considered eligible for a Government pension for any month in which you meet all the requirements for payment except that you are working or have not applied.

(3) If you were receiving or were eligible (as defined in paragraph (b)(2) of this section) to receive a Government pension for one or more months before July 1983, and you meet the dependency test of one-half support that was applied to claimants for husband's and widower's benefits in 1977, even though you don't claim benefits, and you don't actually meet the requirements for receiving benefits until a later month. If you meet the exception in this paragraph but you do not meet the exception in paragraph (b)(2), December 1982 is the earliest month for which the reduction will not affect your benefits.

(4) If you would have been eligible for a pension in a given month except for a requirement which delayed eligibility for such pension until the month following the month in which all other requirements were met, we will consider you to be eligible in that given month for the purpose of meeting one of the exceptions in paragraphs (b) (2) and (3) of this section. If you meet an exception solely because of this provision, your benefits will be unreduced for months after November 1984 only.

(5) If, with respect to monthly benefits payable for months after December 1994, you are receiving a Government pension based wholly upon service as a member of a uniformed service, regardless of whether on active or inactive duty and whether covered by social security. However, if the earnings on the last day of employment as a military reservist were not covered, January 1995 is the earliest month for which the reduction will not affect your benefits.

(c) The *one-half support test.* For a man to meet the January 1977 requirement as provided in the exception in paragraph (b)(2) and for a man or a woman to meet the exception in paragraph (b)(3) of this section, he or she must meet a one-half support test. One-half support is defined in § 404.366 of this part. One-half support must be met at one of the following times:

(1) If the insured person had a period of disability which did not end before he or she became entitled to old-age or disability insurance benefits, or died, you must have been receiving at least one-half support from the insured either—

(i) At the beginning of his or her period of disability;

(ii) At the time he or she became entitled to old-age or disability insurance benefits; or

(iii) If deceased, at the time of his or her death.

(2) If the insured did not have a period of disability at the time of his or her entitlement or death, you must have been receiving at least one-half support from the insured either—

(i) At the time he or she became entitled to old-age insurance benefits; or

(ii) If deceased, at the time of his or her death.

(d) *Amount and priority of reduction.* (1) If you became eligible for a Government pension after June 1983, we will reduce (to zero, if necessary) your monthly Social Security benefits as a spouse by two-thirds the amount of your monthly pension. If the reduction is not a multiple of 10 cents, we will round it to the next higher multiple of 10 cents.

(2) If you became eligible for a Government pension before July 1983 and do not meet one of the exceptions in paragraph (b) of this section, we will reduce (to zero, if necessary) your monthly Social Security benefits as a spouse by the full amount of your pension for months before December 1984 and by two-thirds the amount of your monthly pension for months after November 1984. If the reduction is not a multiple of 10 cents, we will round it to the next higher multiple of 10 cents.

(3) Your benefit as a spouse will be reduced, if necessary, for age and for simultaneous entitlement to other Social Security benefits before it is reduced because you are receiving a Government pension. In addition, this reduction follows the order of priority as stated in § 404.402(b).

(4) If the monthly benefit payable to you after the required reduction(s) is not a multiple of $1.00, we will reduce it to the next lower multiple of $1.00 as required by § 404.304(f).

(e) *When effective.* This reduction was put into the Social Security Act by the Social Security Amendments of 1977. It only applies to applications for benefits filed in or after December 1977 and only to benefits for December 1977 and later.

[49 FR 41245, Oct. 22, 1984; 50 FR 20902, May 21, 1985, as amended at 51 FR 23052, June 25, 1986; 60 FR 56513, Nov. 9, 1995]

§ 404.408b Reduction of retroactive monthly social security benefits where supplemental security income (SSI) payments were received for the same period.

(a) *When reduction is required.* We will reduce your retroactive social security benefits if—

(1) You are entitled to monthly social security benefits for a month or months before the first month in which those benefits are paid; and

(2) SSI payments (including federally administered State supplementary payments) which were made to you for the same month or months would have been reduced or not made if your social security benefits had been paid when regularly due instead of retroactively.

(b) *Amount of reduction.* Your retroactive monthly social security benefits will be reduced by the amount of the SSI payments (including federally administered State supplementary payments) that would not have been paid to you, if you had received your monthly social security benefits when they were regularly due instead of retroactively.

(c) *Benefits subject to reduction.* The reduction described in this section applies only to monthly social security benefits. Social security benefits which we pay to you for any month after you have begun receiving recurring monthly social security benefits, and for which you did not have to file a new application, are not subject to reduction. The lump-sum death payment, which is not a monthly benefit, is not subject to reduction.

(d) *Refiguring the amount of the reduction.* We will refigure the amount of the reduction if there are subsequent changes affecting your claim which relate to the reduction period described in paragraph (a) of this section. Refiguring is generally required where there is a change in your month of entitlement or the amount of your social security benefits or SSI payments (including federally administered State supplementary payments) for the reduction period.

(e) *Reimbursement of reduced retroactive monthly social security benefits.* The amount of the reduction will be—

(1) First used to reimburse the States for the amount of any federally administered State supplementary payments that would not have been made to you if the monthly social security benefits had been paid when regularly due instead of retroactively; and

(2) The remainder, if any, shall be covered into the general fund of the U.S. Treasury for the amount of SSI benefits that would not have been paid to you if the monthly social security benefits had been paid to you when regularly due instead of retroactively.

[47 FR 4988, Feb. 3, 1982]

§ 404.409 What is full retirement age?

Full retirement age is the age at which you may receive unreduced old-age, wife's, husband's, widow's, or widower's benefits. Full retirement age has been 65 but is being gradually raised to age 67 beginning with people born after January 1, 1938. See § 404.102 regarding determination of age.

(a) *What is my full retirement age for old-age benefits or wife's or husband's benefits?* You may receive unreduced old-age, wife's, or husband's benefits beginning with the month you attain the age shown.

If your birth date is:	Full retirement age is:
Before 1/2/1938	65 years.
1/2/1938—1/1/1939	65 years and 2 months.
1/2/1939—1/1/1940	65 years and 4 months.
1/2/1940—1/1/1941	65 years and 6 months.
1/2/1941—1/1/1942	65 years and 8 months.
1/2/1942—1/1/1943	65 years and 10 months.
1/2/1943—1/1/1955	66 years.
1/2/1955—1/1/1956	66 years and 2 months.
1/2/1956—1/1/1957	66 years and 4 months.
1/2/1957—1/1/1958	66 years and 6 months.
1/2/1958—1/1/1959	66 years and 8 months.
1/2/1959—1/1/1960	66 years and 10 months.
1/2/1960 and later	67 years.

(b) *What is my full retirement age for widow's or widower's benefits?* You may receive unreduced widow's or widower's benefits beginning with the month you attain the age shown.

If your birth date is:	Full retirement age is:
Before 1/2/1912	62 years.
1/2/1912—1/1/1940	65 years.
1/2/1940—1/1/1941	65 years and 2 months.
1/2/1941—1/1/1942	65 years and 4 months.
1/2/1942—1/1/1943	65 years and 6 months.
1/2/1943—1/1/1944	65 years and 8 months.
1/2/1944—1/1/1945	65 years and 10 months.
1/2/1945—1/1/1957	66 years.
1/2/1957—1/1/1958	66 years and 2 months.
1/2/1958—1/1/1959	66 years and 4 months.
1/2/1959—1/1/1960	66 years and 6 months.
1/2/1960—1/1/1961	66 years and 8 months.
1/2/1961—1/1/1962	66 years and 10 months.
1/2/1962 and later	67 years.

(c) *Can I still retire before full retirement age?* You may still elect early retirement. You may receive old-age, wife's or husband's benefits at age 62. You may receive widow's or widower's benefits at age 60. Those benefits will be reduced as explained in § 404.410.

[68 FR 4707, Jan. 30, 2003]

§ 404.410 How does SSA reduce my benefits when my entitlement begins before full retirement age?

Generally your old-age, wife's, husband's, widow's, or widower's benefits are reduced if entitlement begins before the month you attain full retirement age (as defined in § 404.409). However, your benefits as a wife or husband are not reduced for any month in which you have in your care a child of the worker on whose earnings record you are entitled. The child must be entitled to child's benefits. Your benefits as a widow or widower are not reduced below the benefit amount you would receive as a mother or father for any month in which you have in your care a child of the worker on whose record you are entitled. The child must be entitled to child's benefits. Subject to §§ 404.411 through 404.413, reductions in benefits are made in the amounts described.

(a) *How does SSA reduce my old-age benefits?* The reduction in your primary insurance amount is based on the number of months of entitlement prior to the month you attain full retirement age. The reduction is 5/9 of 1 percent for each of the first 36 months and 5/12 of 1 percent for each month in excess of 36.

Example: Alex's full retirement age for unreduced benefits is 65 years and 8 months. She elects to begin receiving benefits at age 62. Her primary insurance amount of $980.50 must be reduced because of her entitlement to benefits 44 months prior to full retirement age. The reduction is 36 months at 5/9 of 1 percent and 8 months at 5/12 of 1 percent.

$980.50 \times 36 \times 5/9 \times .01 = \$196.10$

$980.50 \times 8 \times 5/12 \times .01 = \$\ 32.68$

The two added together equal a total reduction of $228.78. This amount is rounded to $228.80 (the next higher multiple of 10 cents) and deducted from the primary insurance amount. The resulting $751.70 is the monthly benefit payable.

(b) *How does SSA reduce my wife's or husband's benefits?* Your wife's or husband's benefits before any reduction (see §§ 404.304 and 404.333) are reduced first (if necessary) for the family maximum under § 404.403. They are then reduced based on the number of months of entitlement prior to the month you attain full retirement age. This does not include any month in which you have a child of the worker on whose earnings record you are entitled in your care. The child must be entitled to child benefits. The reduction is 25/36 of 1 percent for each of the first 36 months and 5/12 of 1 percent for each month in excess of 36.

Example: Sam is entitled to old-age benefits. His spouse Ashley elects to begin receiving wife's benefits at age 63. Her full retirement age for unreduced benefits is 65 and 4 months. Her benefit will be reduced for 28 months of entitlement prior to full retirement age. If her unreduced benefit is $412.40 the reduction will be $412.40 × 28 × 25/36 × .01. The resulting $80.18 is rounded to $80.20 (the next higher multiple of 10 cents) and subtracted from $412.40 to determine the monthly benefit amount of $332.20.

(c) *How does SSA reduce my widow's or widower's benefits?* Your entitlement to widow's or widower's benefits may begin at age 60 based on age or at age 50 based on disability. Refer to § 404.335 for more information on the requirements for entitlement. Both types are reduced if entitlement begins prior to attainment of full retirement age (as defined in § 404.409).

(1) *Widow's or widower's benefits based on age.* Your widow's or widower's unreduced benefit amount (the worker's primary insurance amount after any reduction for the family maximum under § 404.403), is reduced or further reduced based on the number of months of entitlement prior to the month you attain full retirement age. This does not include any month in which you have in your care a child of the worker on whose earnings record you are entitled. The child must be entitled to child's benefits. The number of months of entitlement prior to full retirement age is multiplied by .285 and then divided by the number of months in the period beginning with the month of attainment of age 60 and ending with the month immediately before the month of attainment of full retirement age.

Example: Ms. Bogle is entitled to an unreduced widow benefit of $785.70 beginning at age 64. Her full retirement age for unreduced old-age benefits is 65 years and 4 months. She will receive benefits for 16 months prior to attainment of full retirement age. The number of months in the period from age 60 through full retirement age of 65 and 4 months is 64. The reduction in her benefit is $785.70 × 16 × .285 divided by 64 or $55.98. $55.98 is rounded to the next higher multiple of 10 cents ($56.00) and subtracted from $785.70. The result is a monthly benefit of $729.70.

(2) *Widow's or widower's benefits based on disability.* (i) For months after December 1983, your widow's or widower's benefits are not reduced for months of entitlement prior to age 60. You are deemed to be age 60 in your month of entitlement to disabled widow's or widower's benefits and your benefits are reduced only under paragraph (c)(1) of this section.

(ii) For months from January 1973 through December 1983, benefits as a disabled widow or widower were reduced under paragraph (c)(1) of this section. The benefits were then subject to an additional reduction of 43/240 of one percent for each month of entitlement prior to age 60 based on disability.

(3) *Widow's or widower's benefits prior to 1973.* For months prior to January 1973 benefits as a widow or widower were reduced only for months of entitlement prior to age 62. The reduction was 5/9 of one percent for each month of entitlement from the month of attainment of age 60 through the month prior to the month of attainment of age 62. There was an additional reduction of 43/198 of one percent for each month of entitlement prior to age 60 based on disability.

(d) *If my benefits are reduced under this section does SSA ever change the reduction?* The reduction computed under paragraphs (a), (b) or (c) of this section may later be adjusted to eliminate reduction for certain months of entitlement prior to full retirement age as provided in § 404.412. For special provisions on reducing benefits for months

prior to full retirement age involving entitlement to two or more benefits, see § 404.411.

(e) *Are my widow's or widower's benefits affected if the deceased worker was entitled to old-age benefits?* If the deceased individual was entitled to old-age benefits, see § 404.338 for special rules that may affect your reduced widow's or widower's benefits.

[68 FR 4708, Jan. 30, 2003]

§ 404.411 How are benefits reduced for age when a person is entitled to two or more benefits?

(a) *What is the general rule?* Except as specifically provided in this section, benefits of an individual entitled to more than one benefit will be reduced for months of entitlement before full retirement age (as defined in § 404.409) according to the provisions of § 404.410. Such age reductions are made before any reduction under the provisions of § 404.407.

(b) *How is my disability benefit reduced after entitlement to an old-age benefit or widow's or widower's benefit?* A person's disability benefit is reduced following entitlement to an old-age or widow's or widower's benefit (or following the month in which all conditions for entitlement to the widow's or widower's benefit are met except that the individual is entitled to an old-age benefit which equals or exceeds the primary insurance amount on which the widow's or widower's benefit is based) in accordance with the following provisions:

(1) *Individuals born January 2, 1928, or later whose disability began January 1, 1990, or later.* When an individual is entitled to a disability benefit for a month after the month in which she or he becomes entitled to an old-age benefit which is reduced for age under § 404.410, the disability benefit is reduced by the amount by which the old-age benefit would be reduced under § 404.410 if she or he attained full retirement age in the first month of the most recent period of entitlement to the disability benefit.

(2) *Individuals born January 2, 1928, or later whose disability began before January 1, 1990, and, all individuals born before January 2, 1928, regardless of when their disability began*—(i) *First entitled to disability in or after the month of attainment of age 62.* When an individual is first entitled to a disability benefit in or after the month in which she or he attains age 62 and for which she or he is first entitled to a widow's or widower's benefit (or would be so entitled except for entitlement to an equal or higher old-age benefit) before full retirement age, the disability benefit is reduced by the larger of:

(A) The amount the disability benefit would have been reduced under paragraph (b)(1) of this section; or

(B) The amount equal to the sum of the amount the widow's or widower's benefit would have been reduced under the provisions of § 404.410 if full retirement age for unreduced benefits were age 62 plus the amount by which the disability benefit would have been reduced under paragraph (b)(1) of this section if the benefit were equal to the excess of such benefit over the amount of the widow's or widower's benefit (without consideration of this paragraph).

(ii) *First entitled to disability before age 62.* When a person is first entitled to a disability benefit for a month before the month in which she or he attains age 62 and she or he is also entitled to a widow's or widower's benefit (or would be so entitled except for entitlement to an equal or higher old-age benefit), the disability benefit is reduced as if the widow or widower attained full retirement age in the first month of her or his most recent period of entitlement to the disability benefits.

(c) *How is my old-age benefit reduced after entitlement to a widow's or widower's benefit?*—(1) *Individual born after January 1, 1928.* The old-age benefit is reduced in accordance with § 404.410(a). There is no further reduction.

(2) *Individual born before January 2, 1928.* The old-age benefit is reduced if, in the first month of entitlement, she or he is also entitled to a widow's or widower's benefit to which she or he was first entitled for a month before attainment of full retirement age or if, before attainment of full retirement age, she or he met all conditions for entitlement to widow's or widower's benefits in or before the first month for which she or he was entitled to old-age benefits except that the old-age benefit

equals or exceeds the primary insurance amount on which the widow's or widower's benefit would be based. Under these circumstances, the old-age benefit is reduced by the larger of the following:

(i) The amount by which the old-age benefit would be reduced under the regular age reduction provisions of § 404.410; or

(ii) An amount equal to the sum of:

(A) The amount by which the widow's or widower's benefit would be reduced under § 404.410 for months prior to age 62; and

(B) The amount by which the old-age benefit would be reduced under § 404.410 if it were equal to the excess of the individual's primary insurance amount over the widow's or widower's benefit before any reduction for age (but after any reduction for the family maximum under § 404.403).

(d) *How is my wife's or husband's benefit reduced when I am entitled to a reduced old-age benefit in the same month?* When a person is first entitled to a wife's or husband's benefit in or after the month of attainment of age 62, that benefit is reduced if, in the first month of entitlement, she or he is also entitled to an old-age benefit (but is not entitled to a disability benefit) to which she or he was first entitled before attainment of full retirement age. Under these circumstances, the wife's or husband's benefit is reduced by the sum of:

(1) The amount by which the old-age benefit would be reduced under the provisions of § 404.410; and

(2) The amount by which the spouse benefit would be reduced under the provisions of § 404.410 if it were equal to the excess of such benefit (before any reduction for age but after reduction for the family maximum under § 404.403) over the individual's own primary insurance amount.

(e) *How is my wife's or husband's or widow's or widower's benefit reduced when I am entitled to a reduced disability benefit in the same month?* When a person is first entitled to a spouse or widow's or widower's benefit in or after the month of attainment of age 62 (or in the case of widow's or widower's benefits, age 50) that benefit is reduced if, in the first month of entitlement to that benefit, he or she is also entitled to a reduced disability benefit. Under these circumstances, the wife's or husband's or widow's or widower's benefit is reduced by the sum of:

(1) The amount (if any) by which the disability benefit is reduced under paragraph (b)(1) of this section, and

(2) The amount by which the wife's or husband's or widow's or widower's benefit would be reduced under § 404.410 if it were equal to the excess of such benefit (before any reduction for age but after reduction for the family maximum under § 404.403) over the disability benefit (before any reduction under paragraph (b) of this section).

[68 FR 4709, Jan. 30, 2003]

§ 404.412 After my benefits are reduced for age when and how will adjustments to that reduction be made?

(a) *When may adjustment be necessary?* The following months are not counted for purposes of reducing benefits in accordance with § 404.410;

(1) Months subject to deduction under § 404.415 or § 404.417;

(2) In the case of a wife's or husband's benefit, any month in which she or he had a child of the insured individual in her or his care and for which the child was entitled to child's benefits;

(3) In the case of a wife's or husband's benefit, any month for which entitlement to such benefits is precluded because the insured person's disability ceased (and, as a result, the insured individual's entitlement to disability benefits ended);

(4) In the case of a widow's or widower's benefit, any month in which she or he had in her or his care a child of the deceased insured individual and for which the child was entitled to child's benefits;

(5) In the case of a widow's or widower's benefit, any month before attainment of full retirement age for which she or he was not entitled to such benefits;

(6) In the case of an old-age benefit, any month for which the individual was entitled to disability benefits.

(b) *When is the adjustment made?* We make automatic adjustments in benefits to exclude the months of entitlement described in paragraphs (a)(1)

through (6) of this section from consideration when determining the amount by which such benefits are reduced. Each year we examine beneficiary records to identify when an individual has attained full retirement age and one or more months described in paragraphs (a)(1) through (6) of this section occurred prior to such age during the period of entitlement to benefits reduced for age. Increases in benefit amounts based upon this adjustment are effective with the month of attainment of full retirement age. In the case of widow's or widower's benefits, this adjustment is made in the month of attainment of age 62 as well as the month of attainment of full retirement age.

[68 FR 4710, Jan. 30, 2003, as amended at 68 FR 40122, July 7, 2003]

§ 404.413 After my benefits are reduced for age what happens if there is an increase in my primary insurance amount?

(a) *What is the general rule on reduction of increases?* After an individual's benefits are reduced for age under §§ 404.410 through 404.411, the primary insurance amount on which such benefits are based may subsequently be increased because of a recomputation, a general benefit increase pursuant to an amendment of the Act, or increases based upon a rise in the cost-of-living under section 215(i) of the Social Security Act. When the primary insurance amount increases the monthly benefit amount also increases.

(b) *How are subsequent increases in the primary insurance amount reduced after 1977?* After 1977, when an individual's benefits have been reduced for age and the benefit is increased due to an increase in the primary insurance amount, the amount of the increase to which the individual is entitled is proportionately reduced as provided in paragraph (c) of this section. The method of reduction is determined by whether entitlement to reduced benefits began before 1978 or after 1977. When an individual is entitled to more than one benefit which is reduced for age, the rules for reducing the benefit increases apply to each reduced benefit.

(c) *How is the reduction computed for increases after 1977?*—(1) *Entitlement to reduced benefits after 1977.* If an individual becomes entitled after 1977 to a benefit reduced for age, and the primary insurance amount on which the reduced benefit is based is increased, the amount of the increase payable to the individual is reduced by the same percentage as we use to reduce the benefit in the month of initial entitlement. Where the reduced benefit of an individual has been adjusted at full retirement age (age 62 and full retirement age for widows or widowers), any increase to which the individual becomes entitled thereafter is reduced by the adjusted percentage.

(2) *Entitlement to reduced benefits before 1978.* For an individual, who became entitled to a benefit reduced for age before 1978, whose benefit may be increased as a result of an increase in the primary insurance amount after 1977, we increase the amount of the benefit by the same percentage as the increase in the primary insurance amount.

(d) *How was the reduction computed for increases prior to 1978?* When the individual's primary insurance amount increased, the amount of the increase was reduced separately under §§ 404.410 and 404.411. The separate reduction was based on the number of months from the effective date of the increase through the month of attainment of age 65. This reduced increase amount was then added to the reduced benefit that was in effect in the month before the effective date of the increase. The result was the new monthly benefit amount.

[68 FR 4710, Jan. 30, 2003]

§ 404.415 Deductions because of excess earnings.

(a) *Deductions because of insured individual's earnings.* Under the annual earnings test, we will reduce your monthly benefits (except disability insurance benefits based on the beneficiary's disability) by the amount of your excess earnings (as described in § 404.434), for each month in a taxable year (calendar year or fiscal year) in which you are under full retirement age (as defined in § 404.409(a)).

(b) *Deductions from husband's, wife's, and child's benefits because of excess earnings of the insured individual.* We

will reduce husband's, wife's, and child's insurance benefits payable (or deemed payable—see § 404.420) on the insured individual's earnings record because of the excess earnings of the insured individual. However, beginning with January 1985, we will not reduce the benefits payable to a divorced wife or a divorced husband who has been divorced from the insured individual for at least 2 years.

(c) *Deductions because of excess earnings of beneficiary other than the insured.* If benefits are payable to you (or deemed payable—see § 404.420) on the earnings record of an insured individual and you have excess earnings (as described in § 404.430) charged to a month, we will reduce only your benefits for that month under the annual earnings test. Child's insurance benefits payable by reason of being disabled will be evaluated using Substantial Gainful Activity guidelines (as described in § 404.1574 or § 404.1575). This deduction equals the amount of the excess earnings. (See § 404.434 for charging of excess earnings where both the insured individual and you, a beneficiary, have excess earnings.)

[70 FR 28811, May 19, 2005]

§ 404.417 Deductions because of noncovered remunerative activity outside the United States; 45 hour and 7-day work test.

(a) *Deductions because of individual's activity*—(1) *Prior to May 1983.* For months prior to May 1983, a 7-day work test applies in a month before benefit deductions are made for noncovered remunerative activity outside the United States. A deduction is made from any monthly benefit (except disability insurance benefits, child's insurance benefits based on the child's disability, or widow's or widower's insurance benefits based on the widow's or widower's disability) payable to an individual for each month in a taxable year beginning after December 1954 in which the beneficiary, while under age 72 (age 70 after December 1982), engages in noncovered remunerative activity (see § 404.418) outside the United States on 7 or more different calendar days. The deduction is for an amount equal to the benefit payable to the individual for that month.

(2) *From May 1983 on.* Effective May 1983, a 45-hour work test applies before a benefit deduction is made for the non-covered remunerative activity performed outside the United States in a month by the type of beneficiary described in paragraph (a)(1) of this section.

(b) *Deductions from benefits because of the earnings or work of an insured individual*—(1) *Prior to September 1984.* Where the insured individual entitled to old-age benefits works on 7 or more days in a month prior to September 1984 while under age 72 (age 70 after December 1982), a deduction is made for that month from any:

(i) Wife's, husband's, or child's insurance benefit payable on the insured individual's earnings record; and

(ii) Mother's, father's, or child's insurance benefit based on child's disability, which under § 404.420 is deemed payable on the insured individual's earnings record because of the beneficiary's marriage to the insured individual.

(2) *From September 1984 on.* Effective September 1984, a benefit deduction is made for a month from the benefits described in paragraph (b)(1) of this section only if the insured individual, while under age 70, has worked in excess of 45 hours in that month.

(3) *Amount of deduction.* The amount of the deduction required by this paragraph (b) is equal to the wife's, husband's or child's benefit.

(4) *From January 1985 on.* Effective January 1985, no deduction will be made from the benefits payable to a divorced wife or a divorced husband who has been divorced from the insured individual for at least 2 years.

[49 FR 24117, June 12, 1984, as amended at 51 FR 11912, Apr. 21, 1986; 52 FR 26145, July 13, 1987]

§ 404.418 "Noncovered remunerative activity outside the United States," defined.

An individual is engaged in noncovered remunerative activity outside the United States for purposes of deductions described in § 404.417 if:

(a) He performs services outside the United States as an employee and the services do not constitute employment as defined in subpart K of this part

and, for taxable years ending after 1955, the services are not performed in the active military or naval service of the United States; or

(b) He carries on a trade or business outside the United States (other than the performance of services as an employee) the net income or loss of which is not includable in computing his net earnings from self-employment (as defined in § 404.1050) for a taxable year and would not be excluded from net earnings from self-employment (see § 404.1052) if the trade or business were carried on in the United States. When used in the preceding sentence with respect to a trade or business, the term *United States* does not include the Commonwealth of Puerto Rico, the Virgin Islands and, with respect to taxable years beginning after 1960, Guam or American Samoa, in the case of an alien who is not a resident of the United States (including the Commonwealth of Puerto Rico, the Virgin Islands and, with respect to taxable years beginning after 1960, Guam and American Samoa), and the term *trade or business* shall have the same meaning as when used in section 162 of the Internal Revenue Code of 1954.

§ 404.420 Persons deemed entitled to benefits based on an individual's earnings record.

For purposes of imposing deductions under the annual earnings test (see § 404.415) and the foreign work test (see § 404.417), a person who is married to an old-age insurance beneficiary and who is entitled to a mother's or father's insurance benefit or a child's insurance benefit based on the child's disability (and all these benefits are based on the earnings record of some third person) is deemed entitled to such benefit based on the earnings record of the old-age insurance beneficiary to whom he or she is married. This section is effective for months in any taxable year of the old-age insurance beneficiary that begins after August 1958.

[49 FR 24117, June 12, 1984]

§ 404.421 How are deductions made when a beneficiary fails to have a child in his or her care?

Deductions for failure to have a child in care (as defined in subpart D of this part) are made as follows:

(a) *Wife's or husband's benefit.* A deduction is made from the wife's or husband's benefits to which he or she is entitled for any month if he or she is under full retirement age and does not have in his or her care a child of the insured entitled to child's benefits. However, a deduction is not made for any month in which he or she is age 62 or over, but under full retirement age, and there is in effect a certificate of election for him or her to receive actuarially reduced wife's or husband's benefits for such month (see subpart D of this part).

(b) *Mother's or father's benefits*—(1) *Widow or widower.* A deduction is made from the mother's or father's benefits to which he or she is entitled as the widow or widower (see subpart D of this part) of the deceased individual upon whose earnings such benefit is based, for any month in which he or she does not have in his or her care a child who is entitled to child's benefits based on the earnings of the deceased insured individual.

(2) *Surviving divorced mother or father.* A deduction is made from the mother's or father's benefits to which he or she is entitled as the surviving divorced mother or father (see subpart D of this part) of the deceased individual upon whose earnings record such benefit is based, for any month in which she or he does not have in care a child of the deceased individual who is her or his son, daughter, or legally adopted child and who is entitled to child's benefits based on the earnings of the deceased insured individual.

(c) *Amount to be deducted.* The amount deducted from the benefits, as described in paragraphs (a) and (b) of this section, is equal to the amount of the benefits which is otherwise payable for the month in which she or he does not have a child in his or her care.

(d) *When a child is considered not entitled to benefits.* For purposes of paragraphs (a) and (b) of this section, a person is considered not entitled to child's benefits for any month in which she or

he is age 18 or over and is entitled to child's benefits because she or he is a full-time student at an educational institution. This paragraph applies to benefits for months after December 1964.

[68 FR 4710, Jan. 30, 2003, as amended at 68 FR 40122, July 7, 2003]

§ 404.423 Manner of making deductions.

Deductions provided for in §§ 404.415, 404.417, and 404.421 (as modified in § 404.458) are made by withholding benefits (in whole or in part, depending upon the amount to be withheld) for each month in which an event causing a deduction occurred. If the amount to be deducted is not withheld from the benefits payable in the month in which the event causing the deduction occurred, such amount constitutes a *deduction overpayment* and is subject to adjustment or recovery in accordance with the provisions of subpart F of this part.

[32 FR 19159, Dec. 20, 1967, as amended at 68 FR 40122, July 7, 2003]

§ 404.424 Total amount of deductions where more than one deduction event occurs in a month.

If more than one of the deduction events specified in §§ 404.415, 404.417, and 404.421 occurred in any 1 month, each of which would occasion a deduction equal to the benefit for such month, only an amount equal to such benefit is deducted.

§ 404.425 Total amount of deductions where deduction events occur in more than 1 month.

If a deduction event described in §§ 404.415, 404.417, and 404.421 occurs in more than 1 month, the total amount deducted from an individual's benefits is equal to the sum of the deductions for all months in which any such event occurred.

[68 FR 40122, July 7, 2003]

§ 404.428 Earnings in a taxable year.

(a) When we apply the annual earnings test to your earnings as a beneficiary under this subpart (see § 404.415), we count all of your earnings (as defined in § 404.429) for all months of your taxable year even though you may not be entitled to benefits during all months of that year. (See § 404.430 for the rule that applies to the earnings of a beneficiary who attains full retirement age (as described in § 404.409(a))).

(b) Your taxable year is presumed to be a calendar year until you show to our satisfaction that you have a different taxable year. If you are self-employed, your taxable year is a calendar year unless you have a different taxable year for the purposes of subtitle A of the Internal Revenue Code of 1986. In either case, the number of months in a taxable year is not affected by:

(1) The date a claim for Social Security benefits is filed;

(2) Attainment of any particular age;

(3) Marriage or the termination of marriage; or

(4) Adoption.

(c) The month of death is counted as a month of the deceased beneficiary's taxable year in determining whether the beneficiary had excess earnings for the year under § 404.430. For beneficiaries who die after November 10, 1988, we use twelve as the number of months to determine whether the beneficiary had excess earnings for the year under § 404.430.

(d) Wages, as defined in § 404.429(c), are charged as earnings for the months and year in which you rendered the services. Net earnings or net losses from self-employment count as earnings or losses in the year for which such earnings or losses are reportable for Federal income tax purposes.

[70 FR 28811, May 19, 2005]

§ 404.429 Earnings; defined.

(a) *General.* The term ''earnings'' as used in this subpart (other than as a part of the phrase ''net earnings from self-employment'') includes the sum of your wages for services rendered in a taxable year, plus your net earnings from self-employment for the taxable year, minus any net loss from self-employment for the same taxable year.

(b) *Net earnings or net loss from self-employment.* Your net earnings or net loss from self-employment are determined under the provisions in subpart K of this part, except that:

(1) In this section, the following occupations are included in the definition

of ''trade or business'' (although they may be excluded in subpart K):

(i) The performance of the functions of a public office;

(ii) The performance of a service of a duly ordained, commissioned, or licensed minister of a church in the exercise of his or her ministry or by a member of a religious order in the exercise of duties required by the order;

(iii) The performance of service by an individual in the exercise of his or her profession as a Christian Science practitioner;

(iv) The performance by an individual in the exercise of his or her profession as a doctor of medicine, lawyer, dentist, osteopath, veterinarian, chiropractor, naturopath, or optometrist.

(2) For the sole purpose of the earnings test under this subpart:

(i) If you reach full retirement age, as defined in § 404.409(a), on or before the last day of your taxable year, you will have excluded from your gross earnings from self-employment, your royalties attributable to a copyright or patent obtained before the taxable year in which you reach full retirement age; and

(ii) If you are entitled to insurance benefits under title II of the Act, other than disability insurance benefits or child's insurance benefits payable by reason of being disabled, we will exclude from gross earnings any self-employment income you received in a year after your initial year of entitlement that is not attributable to services you performed after the first month you became entitled to benefits. In this section, services means any significant work activity you performed in the operation or management of a trade, profession, or business which can be related to the income received. If a part of the income you receive in a year is not related to any significant services you performed after the month of initial entitlement, only that part of your income may be excluded from gross earnings for deduction purposes. We count the balance of the income for deduction purposes. Your royalties or other self-employment income is presumed countable for purposes of the earnings test until it is shown to our satisfaction that such income may be excluded under this section.

(3) We do not count as significant services:

(i) Actions you take after the initial month of entitlement to sell a crop or product if it was completely produced in or before the month of entitlement. This rule does not apply to income you receive from a trade or business of buying and selling products produced or made by others; for example, a grain broker.

(ii) Your activities to protect an investment in a currently operating business or activities that are too irregular, occasional, or minor to be considered as having a bearing on the income you receive, such as—

(A) Hiring an agent, manager, or other employee to operate the business;

(B) Signing contracts where your signature is required, so long as the major contract negotiations were handled by others in running the business for you;

(C) Looking over the company's financial records to assess the effectiveness of those agents, managers, or employees in running the business for you;

(D) Personally contacting an old and valued customer solely for the purpose of maintaining good will when such contact has a minimal effect on the ongoing operation of the trade or business; or

(E) Occasionally filling in for an agent, manager, or other employee or partner in an emergency.

(4) In figuring your net earnings or net loss from self-employment, we count all net income or net loss even though:

(i) You did not perform personal services in carrying on the trade or business;

(ii) The net profit was less than $400;

(iii) The net profit was in excess of the maximum amount creditable to your earnings record; or

(iv) The net profit was not reportable for social security tax purposes.

(5) Your net earnings from self-employment is the excess of gross income over the allowable business deductions (allowed under the Internal Revenue Code). Net loss from self-employment is the excess of business deductions (that are allowed under the Internal Revenue Code) over gross income. You

cannot deduct, from wages or net earnings from self-employment, expenses in connection with the production of income excluded from gross income under paragraph (b)(2)(ii) of this section.

(c) *Wages.* Wages include the gross amount of your wages rather than the net amount paid after deductions by your employer for items such as taxes and insurance. Wages are defined in subpart K of this part, except that we also include the following types of wages that are excluded in subpart K:

(1) Remuneration in excess of the amounts in the annual wage limitation table in § 404.1047;

(2) Wages of less than the amount stipulated in section § 404.1057 that you receive in a calendar year for domestic service in the private home of your employer, or service not in the course of your employer's trade or business;

(3) Payments for agricultural labor excluded under § 404.1055;

(4) Remuneration, cash and non-cash, for service as a home worker even though the cash remuneration you received is less than the amount stipulated in § 404.1058(a) in a calendar year;

(5) Services performed outside the United States in the Armed Forces of the United States.

(d) *Presumptions concerning wages.* For purposes of this section, when reports received by us show that you received wages (as defined in paragraph (c) of this section) during a taxable year, it is presumed that they were paid to you for services rendered in that year unless you present evidence to our satisfaction that the wages were paid for services you rendered in another taxable year. If a report of wages shows your wages for a calendar year, your taxable year is presumed to be a calendar year for purposes of this section unless you present evidence to our satisfaction that your taxable year is not a calendar year.

[70 FR 28812, May 19, 2005]

§ 404.430 Monthly and annual exempt amounts defined; excess earnings defined.

(a) *Monthly and annual exempt amounts.* (1) The earnings test monthly and annual exempt amounts are the amounts of wages and self-employment income which you, as a Social Security beneficiary, may earn in any month or year without part or all of your monthly benefit being deducted because of excess earnings. The monthly exempt amount, (which is 1/12 of the annual exempt amount), applies only in a beneficiary's grace year or years. (See § 404.435(a) and (b)). The annual exempt amount applies to the earnings of each non-grace taxable year prior to the year of full retirement age, as defined in § 404.409(a). A larger ''annual'' exempt amount applies to the total earnings of the months in the taxable year that precedes the month in which you attain full retirement age. The full annual exempt amount applies to the earnings of these pre-full retirement age months, even though they are earned in less than a year. For beneficiaries using a fiscal year as a taxable year, the exempt amounts applicable at the end of the fiscal year apply.

(2) We determine the monthly exempt amounts for each year by a method that depends on the type of exempt amount. In each case, the exempt amount so determined must be greater than or equal to the corresponding exempt amount in effect for months in the taxable year in which the exempt amount determination is being made.

(i) To calculate the lower exempt amount (the one applicable before the calendar year of attaining full retirement age) for any year after 1994, we multiply $670 (the lower exempt amount for 1994) by the ratio of the national average wage index for the second prior year to that index for 1992. If the amount so calculated is not a multiple of $10, we round it to the nearest multiple of $10 (*i.e.*, if the amount ends in $5 or more, we round up, otherwise we round down). The annual exempt amount is then 12 times the rounded monthly exempt amount.

(ii) The higher exempt amount (the one applicable in months of the year of attaining full retirement age (as defined in section 404.409(a)) that precede such attainment) was set by legislation (Public Law 104–121) for years 1996–2002. To calculate the higher exempt amount for any year after 2002, we multiply $2,500 (the higher exempt amount for 2002) by the ratio of the national average wage index for the second prior

year to that index for 2000. We round the result as described in paragraph (a)(2)(i) of this section for the lower exempt amount.

(iii) The following are the annual and monthly exempt amounts for taxable years 2000 through 2005.

Year	For years through taxable year preceding year of reaching full retirement age		Months of taxable year prior to month of full of retirement age	
	Reduction: $1 for every $2 over the exempt amount		Reduction: $1 for every $3 over the exempt amount	
	Annual	Monthly	Annual	Monthly
2000	$10,080	$840	$17,000	$1,417
2001	10,680	890	25,000	2,084
2002	11,280	940	30,000	2,500
2003	11,520	960	30,720	2,560
2004	11,640	970	31,080	2,590
2005	12,000	1,000	31,800	2,650

(b) *Method of determining excess earnings for years after December 1999.* If you have not yet reached your year of full retirement age, your excess earnings for a taxable year are 50 percent of your earnings (as described in § 404.429) that are above the exempt amount. After December 31, 1999, in the taxable year in which you will reach full retirement age (as defined in § 404.409(a)), the annual (and monthly, if applicable) earnings limit applies to the earnings of the months prior to the month in which you reach full retirement age. Excess earnings are 33⅓ percent of the earnings above the annual exempt amount. Your earnings after reaching the month of full retirement age are not subject to the earnings test.

[70 FR 28813, May 19, 2005]

§ 404.434 Excess earnings; method of charging.

(a) *Months charged.* If you have not yet reached your year of full retirement age, and if your estimated earnings for a year result in estimated excess earnings (as described in § 404.430), we will charge these excess earnings to your full benefit each month from the beginning of the year, until all of the estimated excess earnings have been charged. Excess earnings, however, are not charged to any month described in §§ 404.435 and 404.436.

(b) *Amount of excess earnings charged*—(1) *Insured individual's excess earnings.* For each $1 of your excess earnings we will decrease by $1 the benefits to which you and all others are entitled (or deemed entitled—see § 404.420) on your earnings record. (See § 404.439 where the excess earnings for a month are less than the total benefits payable for that month.) (See 404.415(b) for the effect on divorced wife's and divorced husband's benefits.)

(2) *Excess earnings of beneficiary other than insured individual.* We will charge a beneficiary, other than the insured, $1 for each $1 of the beneficiary's excess earnings (see § 404.437). These excess earnings, however, are charged only against that beneficiary's own benefits.

(3) *You, the insured individual, and a person entitled (or deemed entitled) on your earnings record both have excess earnings.* If both you and a person entitled (or deemed entitled) on your earnings record have excess earnings (as described in § 404.430), your excess earnings are charged first against the total family benefits payable (or deemed payable) on your earnings record, as described in paragraph (b)(1) of this section. Next, the excess earnings of a person entitled on your earnings record are charged against his or her own benefits remaining after part of your excess earnings have been charged against his/her benefits (because of the reduction in the total family benefits payable). See § 404.441 for an example of this process and the manner in which partial monthly benefits are apportioned.

(c) *Earnings test applicability.* Public Law 106–182 eliminated the Social Security earnings test, beginning with the month in which a person attains full retirement age (as defined in

§ 404.409(a)), for taxable years after 1999. In the year that you reach full retirement age, the annual earnings test amount is applied to the earnings amounts of the months that precede your month of full retirement age. (See § 404.430). The reduction rate for these months is $1 of benefits for every $3 you earned above the earnings limit in these months. The earnings threshold amount will be increased in conjunction with increases in average wages.

[70 FR 28813, May 19, 2005]

§ 404.435 Excess earnings; months to which excess earnings can or cannot be charged; grace year defined.

(a) *Monthly benefits payable.* We will not reduce your benefits on account of excess earnings for any month in which you, the beneficiary—

(1) Were not entitled to a monthly benefit;

(2) Were considered not entitled to benefits (due to non-covered work outside the United States or no child in care, as described in § 404.436);

(3) Were at full retirement age (as described in § 404.409(a));

(4) Were entitled to payment of a disability insurance benefit as defined in § 404.315; (see §§ 404.1592 and 404.1592a(b) which describes the work test if you are entitled to disability benefits);

(5) Are age 18 or over and entitled to a child's insurance benefit based on disability;

(6) Are entitled to a widow's or widower's insurance benefit based on disability; or

(7) Had a non-service month in your grace year (see paragraph (b) of this section). A non-service month is any month in which you, while entitled to retirement or survivors benefits:

(i) Do not work in self-employment (see paragraphs (c) and (d) of this section);

(ii) Do not perform services for wages greater than the monthly exempt amount set for that month (see paragraph (e) of this section and § 404.430); and

(iii) Do not work in non-covered remunerative activity on 7 or more days in a month while outside the United States. A non-service month occurs even if there are no excess earnings in the year.

(b) *Grace year defined.* (1) A beneficiary's initial grace year is the first taxable year in which the beneficiary has a non-service month (see paragraph (a)(7) of this section) in or after the month in which the beneficiary is entitled to a retirement, auxiliary, or survivor's benefit.

(2) A beneficiary may have another grace year each time his or her entitlement to one type of benefit ends and, after a break in entitlement of at least one month, the beneficiary becomes entitled to a different type of retirement or survivors benefit. The new grace year would then be the taxable year in which the first non-service month occurs after the break in entitlement.

(3) For purposes of determining whether a given year is a beneficiary's grace year, we will not count as a non-service month, a month that occurred while the beneficiary was entitled to disability benefits under section 223 of the Social Security Act or as a disabled widow, widower, or child under section 202.

(4) A beneficiary entitled to child's benefits, to spouse's benefits before age 62 (entitled only by reason of having a child in his or her care), or to mother's or father's benefits is entitled to a termination grace year in any year the beneficiary's entitlement to these types of benefits terminates. This provision does not apply if the termination is because of death or if the beneficiary is entitled to a Social Security benefit for the month following the month in which the entitlement ended. The beneficiary is entitled to a termination grace year in addition to any other grace year(s) available to him or her.

Example 1: Don, age 62, will retire from his regular job in April of next year. Although he will have earned $15,000 for January-April of that year and plans to work part time, he will not earn over the monthly exempt amount after April. Don's taxable year is the calendar year. Since next year will be the first year in which he has a non-service month while entitled to benefits, it will be his grace year and he will be entitled to the monthly earnings test for that year only. He will receive benefits for all months in which he does not earn over the monthly exempt amount (May-December) even though his

earnings have substantially exceeded the annual exempt amount. However, in the years that follow, up to the year of full retirement age, only the annual earnings test will be applied if he has earnings that exceed the annual exempt amount, regardless of his monthly earnings amounts.

Example 2: Marion was entitled to mother's insurance benefits from 1998 because she had a child in her care. Because she had a non-service month in 1998, 1998 was her initial grace year. Marion's child turned 16 in May 2000, and the child's benefits terminated in April 2000. Marion's entitlement to mother's benefits also terminated in April 2000. Since Marion's entitlement did not terminate by reason of her death and she was not entitled to another type of Social Security benefit in the month after her entitlement to a mother's benefit ended, she is entitled to a termination grace year for 2000, the year in which her entitlement to mother's insurance benefits terminated. She applied for and became entitled to widow's insurance benefits effective February 2001. Because there was a break in entitlement to benefits of at least one month before entitlement to another type of benefit, 2001 will be a subsequent grace year if Marion has a non-service month in 2001.

(c) *You worked in self-employment.* You are considered to have worked in self-employment in any month in which you performed substantial services (see § 404.446) in the operation of a trade or business (or in a combination of trades and businesses if there are more than one), as an owner or partner even though you had no earnings or net earnings resulting from your services during the month.

(d) *Presumption regarding work in self-employment.* You are presumed to have worked in self-employment in each month of your taxable year until you show to our satisfaction that in a particular month you did not perform substantial services (see § 404.446(c)) in any trades and businesses from which you derived your annual net income or loss (see § 404.429).

(e) *Presumption regarding services for wages.* You are presumed to have performed services in any month for wages (as defined in § 404.429) of more than the applicable monthly exempt amount in each month of the year, until you show to our satisfaction that you did not perform services for wages in that month that exceeded the monthly exempt amount.

[70 FR 28814, May 19, 2005]

§ 404.436 Excess earnings; months to which excess earnings cannot be charged because individual is deemed not entitled to benefits.

Under the annual earnings test, excess earnings (as described in § 404.430) are not charged to any month in which an individual is deemed not entitled to a benefit. A beneficiary (*i.e.*, the insured individual or any person entitled or deemed entitled on the individual's earnings record) is deemed not entitled to a benefit for a month if he is subject to a deduction for that month because of:

(a) Engaging in noncovered remunerative activity outside the United States (as described in §§ 404.417 and 404.418); or

(b) Failure to have a child in his or her care (as described in § 404.421).

[32 FR 19159, Dec. 20, 1967, as amended at 38 FR 9429, Apr. 16, 1973; 38 FR 17716, July 3, 1973; 43 FR 8133, Feb. 28, 1978; 68 FR 40123, July 7, 2003]

§ 404.437 Excess earnings; benefit rate subject to deductions because of excess earnings.

We will further reduce your benefits (other than a disability insurance benefit) because of your excess earnings (see § 404.430), after your benefits may have been reduced because of the following:

(a) The family maximum (see §§ 404.403 and 404.404), which applies to entitled beneficiaries remaining after exclusion of beneficiaries deemed not entitled under § 404.436 (due to a deduction for engaging in non-covered remunerative activity outside the United States or failure to have a child in one's care);

(b) Your entitlement to benefits (see § 404.410) for months before you reach full retirement age (see § 404.409(a)) (this applies only to old-age, wife's, widow's, widower's or husband's benefits);

(c) Your receipt of benefits on your own earnings record, which reduces (see § 404.407) your entitlement (or deemed entitlement; see § 404.420) to benefits on another individual's earnings record; and

(d) Your entitlement to benefits payable (or deemed payable) to you based on the earnings record of an individual

entitled to a disability insurance benefit because of that individual's entitlement to workers' compensation (see § 404.408).

[70 FR 28814, May 19, 2005]

§ 404.439 Partial monthly benefits; excess earnings of the individual charged against his benefits and the benefits of persons entitled (or deemed entitled) to benefits on his earnings record.

Deductions are made against the total family benefits where the excess earnings (as described in § 404.430) of an individual entitled to old-age insurance benefits are charged to a month and require deductions in an amount less than the total family benefits payable on his earnings record for that month (including the amount of a mother's or child's insurance benefit payable to a spouse who is deemed entitled on the individual's earnings record—see § 404.420). The difference between the total benefits payable and the deductions made under the annual earnings test for such month is paid (if otherwise payable under title II of the Act) to each person in the proportion that the benefit to which each is entitled (before the application of the reductions described in § 404.403 for the family maximum, § 404.407 for entitlement to more than one type of benefit, and section 202(q) of the Act for entitlement to benefits before retirement age) and before the application of § 404.304(f) to round to the next lower dollar bears to the total of the benefits to which all of them are entitled, except that the total amount payable to any such person may not exceed the benefits which would have been payable to that person if none of the insured individual's excess earnings had been charged to that month.

Example: A is entitled to an old-age insurance benefit of $165 and his wife is entitled to $82.50 before rounding, making a total of $247.50. After A's excess earnings have been charged to the appropriate months, there remains a partial benefit of $200 payable for October, which is apportioned as follows:

	Original benefit	Fraction of original	Benefit[1]
A	$165	2/3	$133
Wife	82.50	1/3	66
Total	247.50		199

[1] After deductions for excess earnings and after rounding per § 404.304(f).

[38 FR 9429, Apr. 16, 1973, as amended at 38 FR 17717, July 3, 1973; 43 FR 8133, Feb. 28, 1978; 48 FR 46149, Oct. 11, 1983]

§ 404.440 Partial monthly benefits; prorated share of partial payment exceeds the benefit before deduction for excess earnings.

Where, under the apportionment described in § 404.439, a person's prorated share of the partial benefit exceeds the benefit rate to which he was entitled before excess earnings of the insured individual were charged, such person's share of the partial benefit is reduced to the amount he would have been paid had there been no deduction for excess earnings (see example). The remainder of the partial benefit is then paid to other persons eligible to receive benefits in the proportion that the benefit of each such other person bears to the total of the benefits to which all such other persons are entitled (before reduction for the family maximum). Thus, if only two beneficiaries are involved, payment is made to one as if no deduction had been imposed; and the balance of the partial benefit is paid to the other. If three or more beneficiaries are involved, however, reapportionment of the excess of the beneficiary's share of the partial benefit over the amount he would have been paid without the deduction is made in proportion to his original entitlement rate (before reduction for the family maximum). If the excess amount involved at any point totals less than $1, it is not reapportioned; instead, each beneficiary is paid on the basis of the last calculation.

Example: Family maximum is $150. Insured individual's excess earnings charged to the month are $25. The remaining $125 is prorated as partial payment.

	Original benefit	Fraction of original total benefit	Benefit after deductions for excess earnings but before reduction for family maximum	Benefit reduced for maximum but without deductions for excess earnings	Benefit payable after both deductions and reductions (and rounded)
Insured Individual	$100	2/5	50	100.00	75
Wife	50	1/5	25	16.60	16
Child	50	1/5	25	16.60	16
Child	50	1/5	25	16.60	16

[32 FR 19159, Dec. 20, 1967, as amended at 48 FR 46149, Oct. 11, 1983]

§ 404.441 Partial monthly benefits; insured individual and another person entitled (or deemed entitled) on the same earnings record both have excess earnings.

Where both the insured individual and another person entitled (or deemed entitled) on the same earnings record have excess earnings (as described in § 404.430), their excess earnings are charged, and their partial monthly benefit is apportioned, as follows:

Example: M and his wife are initially entitled to combined total benefits of $264 per month based on M's old-age insurance benefit of $176. For the taxable year in question, M's excess earnings were $1,599 and his wife's excess earnings were $265. Both were under age 65. M had wages of more than $340 in all months of the year except February, while his wife had wages of more than $340 in all months of the year. After M's excess earnings have been charged to the appropriate months (all months through July except February), there remains a partial benefit payment for August of $249, which is allocated to M and his wife in the ratio that the original benefit of each bears to the sum of their original benefits: $166 and $83. His wife's excess earnings are charged against her full benefit for February ($88), her partial benefit for August ($83), her full benefit for September, and from $6 of her October benefit, leaving an $82 benefit payable to her for that month.

[48 FR 46149, Oct. 11, 1983]

§ 404.446 Definition of "substantial services" and "services."

(a) *General.* In general, the substantial services test will be applicable only in a grace year (including a termination grace year) as defined in § 404.435(c)(1). It is a test of whether, in view of all the services rendered by the individual and the surrounding circumstances, the individual reasonably can be considered retired in the month in question. In determining whether an individual has or has not performed substantial services in any month, the following factors are considered:

(1) The amount of time the individual devoted to all trades and businesses;

(2) The nature of the services rendered by the individual;

(3) The extent and nature of the activity performed by the individual before he allegedly retired as compared with that performed thereafter;

(4) The presence or absence of an adequately qualified paid manager, partner, or family member who manages the business;

(5) The type of business establishment involved;

(6) The amount of capital invested in the trade or business; and

(7) The seasonal nature of the trade or business.

(b) *Individual engaged in more than one trade or business.* When an individual, in any month, performs services in more than one trade or business, his services in all trades or businesses are considered together in determining whether he performed substantial services in self-employment in such month.

(c) *Evidentiary requirements.* An individual who alleges that he did not render substantial services in any month, or months, shall submit detailed information about the operation of the trades or businesses, including the individual's activities in connection therewith. When requested to do so by the Administration, the individual shall also submit such additional statements, information, and other evidence as the Administration may consider necessary for a proper determination of whether the individual rendered substantial services in self-employment. Failure of the individual

to submit the requested statements, information, and other evidence is a sufficient basis for a determination that the individual rendered substantial services in self-employment during the period in question.

[32 FR 19159, Dec. 20, 1967, as amended at 47 FR 46691, Oct. 20, 1982]

§ 404.447 Evaluation of factors involved in substantial services test.

In determining whether an individual's services are substantial, consideration is given to the following factors:

(a) *Amount of time devoted to trades or businesses.* Consideration is first given to the amount of time the self-employed individual devotes to all trades or businesses, the net income or loss of which is includable in computing his earnings as defined in § 404.429. For the purposes of this paragraph, the time devoted to a trade or business includes all the time spent by the individual in any activity, whether physical or mental, at the place of business or elsewhere in furtherance of such trade or business. This includes the time spent in advising and planning the operation of the business, making business contacts, attending meetings, and preparing and maintaining the facilities and records of the business. All time spent at the place of business which cannot reasonably be considered unrelated to business activities is considered time devoted to the trade or business. In considering the weight to be given to the time devoted to trades or businesses the following rules are applied:

(1) *Forty-five hours or less in a month devoted to trade or business.* Where the individual establishes that the time devoted to his trades and businesses during a calendar month was not more than 45 hours, the individual's services in that month are not considered substantial unless other factors (see paragraphs (b), (c), and (d) of this section) make such a finding unreasonable. For example, an individual who worked only 15 hours in a month might nevertheless be found to have rendered substantial services if he was managing a sizable business or engaging in a highly skilled occupation. However, the services of less than 15 hours rendered in all trades and businesses during a calendar month are not substantial.

(2) *More than 45 hours in a month devoted to trades and businesses.* Where an individual devotes more than 45 hours to all trades and businesses during a calendar month, it will be found that the individual's services are substantial unless it is established that the individual could reasonably be considered retired in the month and, therefore, that such services were not, in fact, substantial.

(b) *Nature of services rendered.* Consideration is also given to the nature of the services rendered by the individual in any case where a finding that the individual was retired would be unreasonable if based on time alone (see paragraph (a) of this section). The more highly skilled and valuable his services in self-employment are, the more likely the individual rendering such services could not reasonably be considered retired. The performance of services regularly also tends to show that the individual has not retired. Services are considered in relation to the technical and management needs of the business in which they are rendered. Thus, skilled services of a managerial or technical nature may be so important to the conduct of a sizable business that such services would be substantial even though the time required to render the services is considerably less than 45 hours.

(c) *Comparison of services rendered before and after retirement.* Where consideration of the amount of time devoted to a trade or business (see paragraph (a) of this section) and the nature of services rendered (see paragraph (b) of this section) is not sufficient to establish whether an individual's services were substantial, consideration is given to the extent and nature of the services rendered by the individual before his *retirement,* as compared with the services performed during the period in question. A significant reduction in the amount or importance of services rendered in the business tends to show that the individual is retired; absence of such reduction tends to show that the individual is not retired.

(d) *Setting in which services performed.* Where consideration of the factors described in paragraphs (a), (b), and (c) of

this section is not sufficient to establish that an individual's services in self-employment were or were not substantial, all other factors are considered. The presence or absence of a capable manager, the kind and size of the business, the amount of capital invested and whether the business is seasonal, as well as any other pertinent factors, are considered in determining whether the individual's services are such that he can reasonably be considered retired.

§ 404.450 Required reports of work outside the United States or failure to have care of a child.

(a) *Beneficiary engaged in noncovered remunerative activity; report by beneficiary*. Any individual entitled to a benefit which is subject to a deduction in that month because of noncovered remunerative activity outside the United States (see § 404.417) shall report the occurrence of such an event to the Social Security Administration before the receipt and acceptance of a benefit for the second month following the month in which such event occurred.

(b) *Beneficiary receiving wife's, husband's, mother's or father's insurance benefits does not have care of a child; report by beneficiary*. Any person receiving wife's, husband's, mother's, or father's insurance benefits which are subject to a deduction (as described in § 404.421) because he or she did not have a child in his or her care shall report the occurrence of such an event to the Social Security Administration before the receipt and acceptance of a benefit for the second month following the month in which the deduction event occurred.

(c) *Report required by person receiving benefits on behalf of another*. Where a person is receiving benefits on behalf of a beneficiary (see subpart U of this part) it is his duty to make the report to the Administration required by paragraph (a) or (b) of this section, on behalf of the beneficiary.

(d) *Report; content and form*. A report required under the provisions of this section shall be filed with the Social Security Administration. (See § 404.614 of this part for procedures concerning place of filing and date of receipt of such a report.) The report should be made on a form prescribed by the Administration and in accordance with instructions, printed thereon or attached thereto, as prescribed by the Administration. Prescribed forms may be obtained at any office of the Administration. If the prescribed form is not used, the report should be properly identified (e.g., show the name and social security claim number of the beneficiary about whom the report is made), describe the events being reported, tell when the events occurred, furnish any other pertinent data (e.g., who has care of the children), and be properly authenticated (e.g., bear the signature and address of the beneficiary making the report or the person reporting on his behalf). The report should contain all the information needed for a proper determination of whether a deduction applies and, if it does, the period for which such deductions should be made.

[32 FR 19159, Dec. 20, 1967, as amended at 49 FR 24117, June 12, 1984; 51 FR 10616, Mar. 28, 1986; 65 FR 16813, Mar. 30, 2000]

§ 404.451 Penalty deductions for failure to report within prescribed time limit noncovered remunerative activity outside the United States or not having care of a child.

(a) *Penalty for failure to report*. If an individual (or the person receiving benefits on his behalf) fails to comply with the reporting obligations of § 404.450 within the time specified in § 404.450 and it is found that good cause for such failure does not exist (see § 404.454), a penalty deduction is made from the individual's benefits in addition to the deduction described in § 404.417 (relating to noncovered remunerative activity outside the United States) or § 404.421 (relating to failure to have care of a child).

(b) *Determining amount of penalty deduction*. The amount of the penalty deduction for failure to report noncovered remunerative activity outside the United States or not having care of a child within the prescribed time is determined as follows:

(1) *First failure to make timely report*. The penalty deduction for the first failure to make a timely report is an amount equal to the individual's benefit or benefits for the first month for

which the deduction event was not reported timely.

(2) *Second failure to make timely report.* The penalty deduction for the second failure to make a timely report is an amount equal to twice the amount of the individual's benefit or benefits for the first month for which the deduction event in the second failure period was not reported timely.

(3) *Subsequent failures to make timely reports.* The penalty deduction for the third or subsequent failure to file a timely report is an amount equal to three times the amount of the individual's benefit or benefits for the first month for which the deduction event in the third failure period was not reported timely.

(c) *Determining whether a failure to file a timely report is first, second, third, or subsequent failure*—(1) *Failure period.* A failure period runs from the date of one delinquent report (but initially starting with the date of entitlement to monthly benefits) to the date of the next succeeding delinquent report, excluding the date of the earlier report and including the date of the later report. The failure period includes each month for which succeeding delinquent report, excluding a report becomes overdue during a failure period, but it does not include any month for which a report is not yet overdue on the ending date of such period. If *good cause* (see § 404.454) is found for the entire period, the period is not regarded as a failure period.

(2) *First failure.* When no penalty deduction under paragraph (b) of this section has previously been imposed against the beneficiary for failure to report noncovered remunerative activity outside the United States or for failure to report not having care of a child, the earliest month in the first failure period for which a report is delinquent and for which *good cause* (see § 404.454) for failure to make the required report is not found is considered to be the first failure.

(3) *Second failure.* After one penalty deduction under paragraph (b) of this section has been imposed against the beneficiary, the first month for which a report is delinquent in the second failure period is considered to be the second failure.

(4) *Third and subsequent failures.* After a second penalty deduction under paragraph (b) of this section has been imposed against the beneficiary, the first month for which a report is delinquent in the third failure period is considered to be the third failure. Subsequent failures will be determined in the same manner.

Example: M became entitled in January 1966 to mother's benefits; these benefits are not payable for any month in which the mother does not have a child in her care. M accepted benefits for each month from January 1966 through June 1967. In July 1967 she reported that she had not had a child in her care in January 1967. As she was not eligible for a benefit for any month in which she did not have a child in her care, M's July 1967 benefit was withheld to recover the overpayment she had received for January 1967, and the next payment she received was for August 1967. No penalty was imposed for her failure to make a timely report of the deduction event that occurred in January 1967 because it was determined that *good cause* existed.

In March 1968 M reported that she had not had a child in her care in September or October 1967; however, she had accepted benefit payments for each month from August 1967 through February 1968. Her benefits for March and April 1968 were withheld to recover the overpayment for September and October 1967. Also, it was determined that *good cause* was not present for M's failure to make a timely report of the deduction event that had occurred in September 1967. A penalty equal to her benefit for September 1967 was deducted from M's May 1968 payment since this was her *first failure* to report not having a child in her care. Payments to her then were continued.

On November 4, 1968, it was learned that M had not had a child in her care in November 1967 or in June, July, or August 1968 although she had accepted benefits for June through October 1968. Consequently, M's benefits for November 1968 through February 1969 were withheld to recover the 4 months' overpayment she received for months in which she did not have a child in her care. In addition, it was determined that *good cause* was not present for M's failure to report the deduction events, and a penalty was imposed equal to twice the amount of M's benefit for the month of June 1968. This was M's *second failure* to report not having a child in her care. No further penalty applied for November 1967 because that month was included in M's *first-failure* period.

(5) *Penalty deductions imposed under § 404.453 not considered.* A failure to

make a timely report of earnings as required by § 404.452 for which a penalty deduction is imposed under § 404.453 is not counted as a failure to report in determining the first or subsequent failure to report noncovered remunerative activity outside the United States or not having care of a child.

(d) *Limitation on amount of penalty deduction.* Notwithstanding the provisions described in paragraph (b) of this section, the amount of the penalty deduction imposed for failure to make a timely report of noncovered remunerative activity outside the United States or for failure to report not having care of a child may not exceed the number of months in that failure period for which the individual received and accepted a benefit and for which a deduction is imposed by reason of his noncovered remunerative activity outside the United States or failure to have care of a child. (See § 404.458 for other limitations on the amount of the penalty deduction.)

[38 FR 3596, Feb. 8, 1973, as amended at 38 FR 9430, Apr. 16, 1973]

§ 404.452 Reports to Social Security Administration of earnings; wages; net earnings from self-employment.

(a) *Reporting requirements and conditions under which a report of earnings, that is, wages and/or net earnings from self-employment, is required.* (1) If you have not reached full retirement age (see § 404.409(a)) and you are entitled to a monthly benefit, other than only a disability insurance benefit, you are required to report to us the total amount of your earnings (as defined in § 404.429) for each taxable year. This report will enable SSA to pay you accurate benefits and avoid both overpayments and underpayments.

(2) If your wages and/or net earnings from self-employment in any month(s) of the year are below the allowable amount (see §§ 404.446 and 404.447), your report should include this information in order to establish your grace year (see § 404.435) and possible eligibility for benefits for those months.

(3) Your report to us for a taxable year should be filed on or before the 15th day of the fourth month following the close of the taxable year; for example, April 15 when the beneficiary's taxable year is a calendar year. An income tax return or form W-2, filed timely with the Internal Revenue Service, may serve as the report required to be filed under the provisions of this section, where the income tax return or form W-2 shows the same wages and/or net earnings from self-employment that must be reported to us. Although we may accept W-2 information and special payment information from employers, you still have primary responsibility for making sure that the earnings we use for deduction purposes are correct. If there is a valid reason for a delay, we may grant you an extension of up to 4 months to file this report.

(4) You are not required to report to us if:

(i) You reached full retirement age before the first month of your entitlement to benefits; or

(ii) Your benefit payments were suspended under the provisions described in § 404.456 for all months of a taxable year before the year of full retirement age, or for all months prior to your full retirement age in the full retirement age year, unless you are entitled to benefits as an auxiliary or survivor and your benefits are reduced for any month in the taxable year because of earnings and there is another person entitled to auxiliary or survivor's benefits on the same record, but living in a different household.

(b) *Report required by person receiving benefits on behalf of another.* When you receive benefits as a representative payee on behalf of a beneficiary (see subpart U of this part), it is your duty to report any earnings of the beneficiary to us.

(c) *Information required.* If you are the beneficiary, your report should show your name, address, Social Security number, the taxable year for which the report is made, and the total amount of your wages and/or net earnings from self employment during the taxable year. If you are a representative payee, your report should show the name, address, and Social Security number of the beneficiary, the taxable year for which the report is made, and the total earnings of the beneficiary, as well as your name, address, and Social Security number.

(d) *Requirement to furnish requested information.* You, the beneficiary (or the person reporting on his/her behalf) are required to furnish any other information about earnings and services that we request for the purpose of determining the correct amount of benefits payable for a taxable year (see § 404.455).

(e) *Extension of time for filing report*—(1) *Request for extension to file report.* Your request for an extension of time, or the request of your authorized agent, must be in writing and must be filed at a Social Security Administration office before your report is due. Your request must include the date, your name, the Social Security number of the beneficiary, the name and Social Security number of the person filing the request if other than the beneficiary, the year for which your report is due, the amount of additional time requested, the reason why you require this extension (see § 404.454), and your signature.

(2) *Evidence that extension of time has been granted.* If you do not receive written approval of an extension of time for making your report of earnings, it will be presumed that no extension of time was granted. In such case, if you do not file on time, you will need to establish that you had good cause (§ 404.454) for filing your report after the normal due date.

[70 FR 28815, May 19, 2005]

§ 404.453 Penalty deductions for failure to report earnings timely.

(a) *Penalty for failure to report earnings; general.* Penalty deductions are imposed against an individual's benefits, in addition to the deductions required because of his excess earnings (see § 404.415), if:

(1) He fails to make a timely report of his earnings as specified in § 404.452 for a taxable year beginning after 1954;

(2) It is found that good cause for failure to report earnings timely (see § 404.454) does not exist;

(3) A deduction is imposed because of his earnings (see § 404.415) for that year; and

(4) He received and accepted any payment of benefits for that year.

(b) *Determining amount of penalty deduction.* The amount of the penalty deduction for failure to report earnings for a taxable year within the prescribed time is determined as follows:

(1) *First failure to file timely report.* The penalty deduction for the first failure to file a timely report is an amount equal to the individual's benefit or benefits for the last month for which he was entitled to such benefit or benefits during the taxable year, except that with respect to any deductions imposed on or after January 2, 1968, if the amount of the deduction imposed for the taxable year is less than the benefit or benefits for the last month of the taxable year for which he was entitled to a benefit under section 202 of the Act, the penalty deduction is an amount equal to the amount of the deduction imposed but not less than $10.

(2) *Second failure to file timely report.* The penalty deduction for the second failure to file a timely report is an amount equal to twice the amount of the individual's benefit or benefits for the last month for which he was entitled to such benefit or benefits during such taxable year.

(3) *Subsequent failures to file timely reports.* The penalty deduction for the third or subsequent failure to file a timely report is an amount equal to three times the amount of the individual's benefit or benefits for the last month for which he was entitled to such benefit or benefits during such taxable year.

(c) *Determining whether a failure to file a timely report is first, second, or subsequent failure*—(1) *No prior failure.* Where no penalty deduction under this section has previously been imposed against the beneficiary for failure to make a timely report of his earnings, all taxable years (and this may include 2 or more years) for which a report of earnings is overdue as of the date the first delinquent report is made are included in the first failure. The latest of such years for which *good cause* for failure to make the required report (see § 404.454) is not found is considered the first failure to file a timely report.

Example: X became entitled to benefits in 1964 and had reportable earnings for 1964, 1965, and 1966. He did not make his annual reports for those years until July 1967. At that time it was found that 1966 was the only year for which he has good cause for not making

a timely report of his earnings. Since all taxable years for which a report is overdue as of the date of the first delinquent report are included in the first failure period, it was found that his first failure to make a timely report was for 1965. The penalty is equal to his December 1965 benefit rate. If good cause had also been found for both 1965 and 1964, then X would have *no prior failure* within the meaning of this subsection.

(2) *Second and subsequent failures.* After one penalty deduction under paragraph (b) of this section has been imposed against an individual, each taxable year for which a timely report of earnings is not made (and the count commences with reports of earnings which become delinquent after the date the first delinquent report described in paragraph (c)(1) of this section was made), and for which *good cause* for failure to make the required report is not found, is considered separately in determining whether the failure is the second or subsequent failure to report timely.

Example: Y incurred a penalty deduction for not making his 1963 annual report until July 1964. In August 1966 it was found that he had not made a timely report of either his 1964 or 1965 earnings, and good cause was not present with respect to either year. The penalty for 1964 is equal to twice his benefit rate for December 1964. The penalty for 1965 is equal to three times his benefit rate for December 1965.

(3) *Penalty deduction imposed under § 404.451 not considered.* A failure to make a report as required by § 404.450, for which a penalty deduction is imposed under § 404.451, is not counted as a failure to report in determining, under this section, whether a failure to report earnings or wages is the first or subsequent failure to report.

(d) *Limitation on amount of penalty deduction.* Notwithstanding the provisions described in paragraph (b) of this section, the amount of the penalty deduction imposed for failure to file a timely report of earnings for a taxable year may not exceed the number of months in that year for which the individual received and accepted a benefit and for which deductions are imposed by reason of his earnings for such year. (See § 404.458 for other limitations on the amount of the penalty deduction.)

[32 FR 19159, Dec. 20, 1967, as amended at 38 FR 3597, Feb. 8, 1973; 38 FR 9431, Apr. 16, 1973]

§ 404.454 Good cause for failure to make required reports.

(a) *General.* The failure of an individual to make a timely report under the provisions described in §§ 404.450 and 404.452 will not result in a penalty deduction if the individual establishes to the satisfaction of the Administration that his failure to file a timely report was due to good cause. Before making any penalty determination as described in §§ 404.451 and 404.453, the individual shall be advised of the penalty and good cause provisions and afforded an opportunity to establish good cause for failure to report timely. The failure of the individual to submit evidence to establish good cause within a specified time may be considered a sufficient basis for a finding that good cause does not exist (see § 404.705). In determining whether good cause for failure to report timely has been established by the individual, consideration is given to whether the failure to report within the proper time limit was the result of untoward circumstances, misleading action of the Social Security Administration, confusion as to the requirements of the Act resulting from amendments to the Act or other legislation, or any physical, mental, educational, or linguistic limitations (including any lack of facility with the English language) the individual may have. For example, *good cause* may be found where failure to file a timely report was caused by:

(1) Serious illness of the individual, or death or serious illness in his immediate family;

(2) Inability of the individual to obtain, within the time required to file the report, earnings information from his employer because of death or serious illness of the employer or one in the employer's immediate family; or unavoidable absence of his employer; or destruction by fire or other damage of the employer's business records;

(3) Destruction by fire, or other damage, of the individual's business records;

(4) Transmittal of the required report within the time required to file the report, in good faith to another Government agency even though the report does not reach the Administration

until after the period for reporting has expired;

(5) Unawareness of the statutory provision that an annual report of earnings is required for the taxable year in which the individual attained age 72 provided his earnings for such year exceeded the applicable amount, e.g., $1,680 for a 12-month taxable year ending after December 1967;

(6) Failure on the part of the Administration to furnish forms in sufficient time for an individual to complete and file the report on or before the date it was due, provided the individual made a timely request to the Administration for the forms;

(7) Belief that an extension of time for filing income tax returns granted by the Internal Revenue Service was also applicable to the annual report to be made to the Social Security Administration;

(8) Reliance upon a written report to the Social Security Administration made by, or on behalf of, the beneficiary before the close of the taxable year, if such report contained sufficient information about the beneficiary's earnings or work, to require suspension of his benefits (see § 404.456) and the report was not subsequently refuted or rescinded; or

(9) Failure of the individual to understand reporting responsibilities due to his or her physical, mental, educational, or linguistic limitation(s).

(b) *Notice of determination.* In every case in which it is determined that a penalty deduction should be imposed, the individual shall be advised of the penalty determination and of his reconsideration rights. If it is found that good cause for failure to file a timely report does not exist, the notice will include an explanation of the basis for this finding; the notice will also explain the right to partial adjustment of the overpayment, in accordance with the provisions of § 404.502(c).

(c) *Good cause for subsequent failure.* Where circumstances are similar and an individual fails on more than one occasion to make a timely report, good cause normally will not be found for the second or subsequent violation.

[38 FR 3597, Feb. 8, 1973, as amended at 43 FR 8133, Feb. 28, 1978; 59 FR 1634, Jan. 12, 1994]

§ 404.455 Request by Social Security Administration for reports of earnings and estimated earnings; effect of failure to comply with request.

(a) *Request by Social Security Administration for report during taxable year; effect of failure to comply.* The Social Security Administration may, during the course of a taxable year, request a beneficiary to estimate his or her earnings (as defined in § 404.429) for the current taxable year and for the next taxable year, and to furnish any other information about his or her earnings that the Social Security Administration may specify. If a beneficiary fails to comply with a request for an estimate of earnings for a taxable year, the beneficiary's failure, in itself, constitutes justification under section 203(h) of the Act for a determination that it may reasonably be expected that the beneficiary will have deductions imposed under the provisions described in § 404.415, due to his or her earnings for that taxable year. Furthermore, the failure of the beneficiary to comply with a request for an estimate of earnings for a taxable year will, in itself, constitute justification for the Social Security Administration to use the preceding taxable year's estimate of earnings (or, if available, reported earnings) to suspend payment of benefits for the current or next taxable year.

(b) *Request by Social Security Administration for report after close of taxable year; failure to comply.* After the close of his or her taxable year, the Social Security Administration may request a beneficiary to furnish a report of his or her earnings for the closed taxable year and to furnish any other information about his or her earnings for that year that the Social Security Administration may specify. If he or she fails to comply with this request, this failure shall, in itself, constitute justification under section 203(h) of the Act for a determination that the beneficiary's benefits are subject to deductions as described in § 404.415 for each month in the taxable year (or only for the months thereof specified by the Social Security Administration).

[56 FR 11373, Mar. 18, 1991]

§ 404.456 Current suspension of benefits because an individual works or engages in self-employment.

(a) *Circumstances under which benefit payments may be suspended.* If, on the basis of information obtained by or submitted to the Administration, it is determined that an individual entitled to monthly benefits for any taxable year may reasonably be expected to have deductions imposed against his benefits (as described in § 404.415) by reason of his earnings for such year, the Administration may, before the close of the taxable year, suspend all or part, as the Administration may specify, of the benefits payable to the individual and to all other persons entitled (or deemed entitled—see § 404.420) to benefits on the basis of the individual's earnings record.

(b) *Duration of suspension.* The suspension described in paragraph (a) of this section shall remain in effect with respect to the benefits for each month until the Administration has determined whether or not any deduction under § 404.415 applies for such month.

(c) *When suspension of benefits becomes final.* For taxable years beginning after August 1958, if benefit payments were suspended (as described in paragraph (a) of this section) for all months of entitlement in an individual's taxable year, no benefit payment for any month in that year may be made after the expiration of the period of 3 years, 3 months, and 15 days following the close of the individual's taxable year unless, within that period, the individual, or any person entitled to benefits based on his earnings record, files with the Administration information showing that a benefit for a month is payable to the individual. Subject to the limitations of this paragraph, a determination about deductions may be reopened under the circumstances described in § 404.907.

[32 FR 19159, Dec. 20, 1967, as amended at 65 FR 16813, Mar. 30, 2000]

§ 404.457 Deductions where taxes neither deducted from wages of certain maritime employees nor paid.

(a) *When deduction is required.* A deduction is required where:

(1) An individual performed services after September 1941 and before the termination of Title I of the First War Powers Act, 1941, on or in connection with any vessel as an officer or crew member; and

(2) The services were performed in the employ of the United States and employment was through the War Shipping Administration or, for services performed before February 11, 1942, through the United States Maritime Commission; and

(3) The services, under the provisions of § 404.1041 of this part, constituted employment for the purposes of title II of the Social Security Act; and

(4) The taxes imposed (by section 1400 of the Internal Revenue Code of 1939, as amended) with respect to such services were neither deducted from the individual's wages nor paid by the employer.

(b) *Amount of deduction.* The deduction required by paragraph (a) of this section is an amount equal to 1 percent of the wages with respect to which the taxes described in paragraph (a)(4) of this section were neither deducted nor paid by the employer.

(c) *How deduction is made.* The deduction required by paragraph (a) of this section is made by withholding an amount as determined under paragraph (b) of this section from any monthly benefit or lump-sum death payment based on the earnings record of the individual who performed the services described in paragraph (a) of this section.

[32 FR 19159, Dec. 20, 1967, as amended at 65 FR 16813, Mar. 30, 2000]

§ 404.458 Limiting deductions where total family benefits payable would not be affected or would be only partly affected.

Notwithstanding the provisions described in §§ 404.415, 404.417, 404.421, 404.451, and 404.453 about the amount of the deduction to be imposed for a month, no such deduction is imposed for a month when the benefits payable for that month to all persons entitled to benefits on the same earnings record and living in the same household remain equal to the maximum benefits payable to them on that earnings record. Where making such deductions and increasing the benefits to others in the household (for the month in which the deduction event occurred) would

give members of the household less than the *maximum* (as determined under § 404.404) payable to them, the amount of deduction imposed is reduced to the difference between the maximum amount of benefits payable to them and the total amount which would have been paid if the benefits of members of the household not subject to deductions were increased for that month. The individual subject to the deduction for such month may be paid the difference between the deduction so reduced and his benefit as adjusted under § 404.403 (without application of § 404.402(a)). All other persons in the household are paid, for such month, their benefits as adjusted under § 404.403 without application of § 404.402(a).

[47 FR 43673, Oct. 4, 1982, as amended at 68 FR 15659, Apr. 1, 2003; 68 FR 40123, July 7, 2003]

§ 404.459 Penalty for making false or misleading statements or withholding information.

(a) *Why would SSA penalize me?* You will be subject to a penalty if:

(1) You make, or cause to be made, a statement or representation of a material fact, for use in determining any initial or continuing right to, or the amount of, monthly insurance benefits under title II or benefits or payments under title XVI, that you know or should know is false or misleading; or

(2) You make a statement or representation of a material fact for use as described in paragraph (a)(1) of this section with knowing disregard for the truth; or

(3) You omit from a statement or representation made for use as described in paragraph (a)(1) of this section, or otherwise withhold disclosure (for example, fail to come forward to notify us) of, a fact which you know or should know is material to the determination of any initial or continuing right to, or the amount of, monthly insurance benefits under title II or benefits or payments under title XVI, if you know, or should know, that the statement or representation with such omission is false or misleading or that the withholding of such disclosure is misleading.

(b) *What is the penalty?* The penalty is nonpayment of benefits under title II that we would otherwise pay you and ineligibility for cash benefits under title XVI (including State supplementary payments made by SSA according to § 416.2005).

(c) *How long will the penalty last?* The penalty will last—

(1) Six consecutive months the first time we penalize you;

(2) Twelve consecutive months the second time we penalize you; and

(3) Twenty-four consecutive months the third or subsequent time we penalize you.

(d) *Will this penalty affect any of my other government benefits?* If we penalize you, the penalty will apply only to your eligibility for benefits under titles II and XVI (including State supplementary payments made by us according to § 416.2005). The penalty will not affect—

(1) Your eligibility for benefits that you would otherwise be eligible for under titles XVIII and XIX but for the imposition of the penalty; and

(2) The eligibility or amount of benefits payable under titles II or XVI to another person. For example, another person (such as your spouse or child) may be entitled to benefits under title II based on your earnings record. Benefits would still be payable to that person to the extent that you would be receiving such benefits but for the imposition of the penalty. As another example, if you are receiving title II benefits that are limited under the family maximum provision (§ 404.403) and we stop your benefits because we impose a penalty on you, we will not increase the benefits of other family members who are limited by the family maximum provision simply because you are not receiving benefits because of the penalty.

(e) *How will SSA make its decision to penalize me?* In order to impose a penalty on you, we must find that you knowingly (knew or should have known or acted with knowing disregard for the truth) made a false or misleading statement or omitted or failed to report a material fact if you knew, or should have known, that the omission or failure to disclose was misleading. We will base our decision to penalize you on the evidence and the reasonable inferences that can be drawn from that

evidence, not on speculation or suspicion. Our decision to penalize you will be documented with the basis and rationale for that decision. In determining whether you knowingly made a false or misleading statement or omitted or failed to report a material fact so as to justify imposition of the penalty, we will consider all evidence in the record, including any physical, mental, educational, or linguistic limitations (including any lack of facility with the English language) which you may have had at the time. In determining whether you acted knowingly, we will also consider the significance of the false or misleading statement or omission or failure to disclose in terms of its likely impact on your benefits.

(f) *What should I do if I disagree with SSA's initial determination to penalize me?* If you disagree with our initial determination to impose a penalty, you have the right to request reconsideration of the penalty decision as explained in § 404.907. We will give you a chance to present your case, including the opportunity for a face-to-face conference. If you request reconsideration of our initial determination to penalize you, you have the choice of a case review, informal conference, or formal conference, as described in § 416.1413(a) through (c). If you disagree with our reconsidered determination you have the right to follow the normal administrative and judicial review process by requesting a hearing before an administrative law judge, Appeals Council review and Federal court review, as explained in § 404.900.

(g) *When will the penalty period begin and end?* Subject to the additional limitations noted in paragraphs (g)(1) and (g)(2) of this section, the penalty period will begin the first day of the month for which you would otherwise receive payment of benefits under title II or title XVI were it not for imposition of the penalty. Once a sanction begins, it will run continuously even if payments are intermittent. If more than one penalty has been imposed, but they have not yet run, the penalties will not run concurrently.

(1) If you do not request reconsideration of our initial determination to penalize you, the penalty period will begin no earlier than the first day of the second month following the month in which the time limit for requesting reconsideration ends. The penalty period will end on the last day of the final month of the penalty period. For example, if the time period for requesting reconsideration ends on January 10, a 6-month period of nonpayment begins on March 1 if you would otherwise be eligible to receive benefits for that month, and ends on August 31.

(2) If you request reconsideration of our initial determination to penalize you and the reconsidered determination does not change our original decision to penalize you, the penalty period will begin no earlier than the first day of the second month following the month we notify you of our reconsidered determination. The penalty period will end on the last day of the final month of the penalty period. For example, if we notify you of our reconsidered determination on August 31, 2001, and you are not otherwise eligible for payment of benefits at that time, but would again be eligible to receive payment of benefits on October 1, 2003, a 6-month period of nonpayment would begin on October 1, 2003 and end on March 31, 2004.

[65 FR 42285, July 10, 2000, as amended at 71 FR 61407, Oct. 18, 2006]

§ 404.460 Nonpayment of monthly benefits to aliens outside the United States.

(a) *Nonpayment of monthly benefits to aliens outside the United States more than 6 months.* Except as described in paragraph (b) and subject to the limitations in paragraph (c) of this section after December 1956 no monthly benefit may be paid to any individual who is not a citizen or national of the United States, for any month after the sixth consecutive calendar month during all of which he is outside the United States, and before the first calendar month for all of which he is in the United States after such absence. (See § 404.380 regarding special payments at age 72.)

(1) For nonpayment of benefits under this section, it is necessary that the beneficiary be an alien, and while an alien, be outside the United States for more than six full consecutive calendar months. In determining whether, at

the time of a beneficiary's initial entitlement to benefits, he or she has been outside the United States for a period exceeding six full consecutive calendar months, not more than the six calendar months immediately preceding the month of initial entitlement may be considered. For the purposes of this section, *outside the United States* means outside the territorial boundaries of the 50 States, the District of Columbia, Puerto Rico, the Virgin Islands of the United States, Guam, American Samoa, and the Commonwealth of the Northern Mariana Islands.

(2) Effective with 6-month periods beginning after January 2, 1968, after an alien has been outside the United States for any period of 30 consecutive days, he is deemed to be outside the United States continuously until he has returned to the United States and remained in the United States for a period of 30 consecutive days.

(3) Payments which have been discontinued pursuant to the provisions of this section will not be resumed until the alien beneficiary has been in the United States for a full calendar month. A full calendar month includes 24 hours of each day of the calendar month.

(4) Nonpayment of benefits to an individual under this section does not cause nonpayment of benefits to other persons receiving benefits based on the individual's earnings record.

Example: R, an alien, leaves the United States on August 15, 1967, and returns on February 1, 1968. He leaves again on February 15, 1968, and does not return until May 15, 1968, when he spends 1 day in the United States. He has been receiving monthly benefits since July 1967.

R's first 6-month period of absence begins September 1, 1967. Since this period begins before January 2, 1968, his visit (Feb. 1, 1968, to Feb. 15, 1968) to the United States for less than 30 consecutive days is sufficient to break this 6-month period.

R's second 6-month period of absence begins March 1, 1968. Since this period begins after January 2, 1968, and he was outside the United States for 30 consecutive days, he must return and spend 30 consecutive days in the United States prior to September 1, 1968, to prevent nonpayment of benefits beginning September 1968. If R fails to return to the United States for 30 consecutive days prior to September 1, 1968, payments will be discontinued and will not be resumed until R spends at least 1 full calendar month in the United States.

(b) *When nonpayment provisions do not apply*. The provisions described in paragraph (a) of this section do not apply, subject to the limitations in paragraph (c) of this section, to a benefit for any month if:

(1) The individual was, or upon application would have been, entitled to a monthly benefit for December 1956, based upon the same earnings record; or

(2)(i) The individual upon whose earnings the benefit is based, before that month, has resided in the United States for a period or periods aggregating 10 years or more or has earned not less than 40 quarters of coverage;

(ii) Except that, effective with July 1968, § 404.460(b)(2)(i) does not apply if:

(A) The beneficiary is a citizen of a country with a social insurance or pension system meeting the conditions described in paragraphs (b)(7)(i), (ii), and (iii) of this section but does not meet the condition described in paragraph (b)(7)(iv) of this section; or

(B) The beneficiary is a citizen of a country with no social insurance or pension system of general application and at any time within 5 years before January 1968 (or the first month after December 1967 in which benefits are subject to suspension pursuant to paragraph (a) of this section) such beneficiary was residing in a country to which payments were withheld by the Treasury Department pursuant to Vol. II, 31 U.S.C. 3329. *See* § 404.460(c).

(iii) For purposes of this subparagraph a period of residence begins with the day the insured individual arrives in the United States with the intention of establishing at least a temporary home here; it continues so long as he maintains an attachment to an abode in the United States, accompanied by actual physical presence in the United States for a significant part of the period; and ends with the day of departure from the United States with the intention to reside elsewhere; or

(3) The individual is outside the United States while in the active military or naval service of the United States; or

(4) The individual on whose earnings the benefit is based died before that month and:

(i) Death occurred while the individual was on active duty or inactive duty training as a member of a uniformed service, or

(ii) Death occurred after the individual was discharged or released from a period of active duty or inactive duty training as a member of a uniformed service, and the Administrator of Veterans' Affairs determines, and certifies to the Commissioner, that the discharge or release was under conditions other than dishonorable and that death was as a result of a disease or injury incurred or aggravated in line of duty while on active duty or inactive duty training; or

(5) The individual on whose earnings record the benefit is based worked in service covered by the Railroad Retirement Act, and such work is treated as employment covered by the Social Security Act under the provisions described in subpart O of this part; or

(6) The nonpayment of monthly benefits under the provisions described in paragraph (a) of this section would be contrary to a treaty obligation of the United States in effect on August 1, 1956 (see § 404.463(b)); or

(7) The individual is a citizen of a foreign country that the Commissioner determines has in effect a social insurance or pension system (see § 404.463) which meets all of the following conditions:

(i) Such system pays periodic benefits or the actuarial equivalent thereof; and

(ii) The system is of general application; and

(iii) Benefits are paid in this system on account of old age, retirement, or death; and

(iv) Individuals who are citizens of the United States but not citizens of the foreign country and who qualify for such benefits are permitted to receive benefits without restriction or qualification, at their full rate, or the actuarial equivalent thereof, while outside of the foreign country and without regard to the duration of their absence therefrom.

(c) *Nonpayment of monthly benefits to aliens residing in certain countries*—(1) *Benefits for months after June 1968.* Notwithstanding the provisions of paragraphs (a) and (b) of this section, we cannot pay monthly benefits for any month after June 1968 to anyone not a citizen or national of the United States for any month while residing in a country to which payments are being withheld by the Treasury Department pursuant to Vol. II, 31 U.S.C. 3329.

(2) *Benefits for months before July 1968.* If a person who is not a United States citizen or national is entitled to receive benefits under title II of the Social Security Act, and was residing in a country where the Treasury Department withheld benefits on June 30, 1968 pursuant to Vol. II, 31 U.S.C. 3329, benefits cannot be paid. However, if the Treasury Department subsequently removes that restriction, a person who is not a United States citizen or national may be able to be paid benefits to which they were entitled for months prior to July 1968. Benefits cannot be paid,—

(i) To any person other than such individual, or, if such individual dies before such benefits can be paid, to any person other than an individual who was entitled for the month in which the deceased individual died (with the application of section 202(j)(1) of the Social Security Act) to a monthly benefit under title II of such Act on the basis of the same wages and self-employment income as such deceased individual; or

(ii) In excess of an amount equal to the amount of the last 12 months' benefits that would have been payable to such individual.

(3) *List of countries under Treasury Department alien payment restriction.* The Treasury Department is currently withholding payments to persons residing in the following countries pursuant to Vol. II, 31 U.S.C. 3329. We will publish future additions to or deletions from the list of countries in the FEDERAL REGISTER: Cuba, North Korea.

(d) *Nonpayment of monthly benefits to certain aliens entitled to benefits on a worker's earnings record.* An individual who after December 31, 1984 becomes eligible for benefits on the earnings record of a worker for the first time, is an alien, has been outside the United States for more than 6 consecutive

months, and is qualified to receive a monthly benefit by reason of the provisions of paragraphs (b)(2), (b)(3), (b)(5), or (b)(7) of this section, must also meet a U.S. residence requirement described in this section to receive benefits:

(1) An alien entitled to benefits as a child of a living or deceased worker—

(i) Must have resided in the U.S. for 5 or more years as the child of the parent on whose earnings record entitlement is based; or

(ii) The parent on whose earnings record the child is entitled and the other parent, if any, must each have either resided in the United States for 5 or more years or died while residing in the U.S.

(2) An alien who meets the requirements for child's benefits based on paragraph (d)(1) of this section above, whose status as a child is based on an adoptive relationship with the living or deceased worker, must also—

(i) Have been adopted within the United States by the worker on whose earnings record the child's entitlement is based; and

(ii) Have lived in the United States with, and received one-half support from, the worker for a period, beginning prior to the child's attainment of age 18, of

(A) At least one year immediately before the month in which the worker became eligible for old-age benefits or disability benefits or died (whichever occurred first), or

(B) If the worker had a period of disability which continued until the worker's entitlement to old-age or disability benefits or death, at least one year immediately before the month in which that period of disability began.

(3) An alien entitled to benefits as a spouse, surviving spouse, divorced spouse, surviving divorced spouse, or surviving divorced mother or father must have resided in the United States for 5 or more years while in a spousal relationship with the person on whose earnings record the entitlement is based. The spousal relationship over the required period can be that of wife, husband, widow, widower, divorced wife, divorced husband, surviving divorced wife, surviving divorced husband, surviving divorced mother, surviving divorced father, or a combination of two or more of these categories.

(4) An alien who is entitled to parent's benefits must have resided in the United States for 5 or more years as a parent of the person on whose earnings record the entitlement is based.

(5) Individuals eligible for benefits before January 1, 1985 (including those eligible for one category of benefits on a particular worker's earnings record after December 31, 1984, but also eligible for a different category of benefits on the same worker's earnings record before January 1, 1985), will not have to meet the residency requirement.

(6) Definitions applicable to paragraph (d) of this section are as follows:

Eligible for benefits means that an individual satisfies the criteria described in subpart D of this part for benefits at a particular time except that the person need not have applied for those benefits at that time.

Other parent for purposes of paragraph (d)(1)(ii) of this section means any other living parent who is of the opposite sex of the worker and who is the adoptive parent by whom the child was adopted before the child attained age 16 and who is or was the spouse of the person on whose earnings record the child is entitled; or the natural mother or natural father of the child; or the step-parent of the child by a marriage, contracted before the child attained age 16, to the natural or adopting parent on whose earnings record the child is entitled. (Note: Based on this definition, a child may have more than one living *other parent*. However, the child's benefit will be payable for a month if in that month he or she has one *other parent* who had resided in the U.S. for at least 5 years.)

Resided in the United States for satisfying the residency requirement means presence in the United States with the intention of establishing at least a temporary home. A period of residence begins upon arrival in the United States with that intention and continues so long as an attachment to an abode in the United States is maintained, accompanied by actual physical presence in the United States for a significant part of the period, and ending the day of departure from the United States with the intention to reside

elsewhere. The period need not have been continuous and the requirement is satisfied if the periods of U.S. residence added together give a total of 5 full years.

(7) The provisions described in paragraph (d) of this section shall not apply if the beneficiary is a citizen or resident of a country with which the United States has a totalization agreement in force, except to the extent provided by that agreement.

[32 FR 19159, Dec. 20, 1967, as amended at 34 FR 13366, Aug. 19, 1969; 52 FR 8249, Mar. 17, 1987; 52 FR 26145, July 13, 1987; 60 FR 17445, Apr. 6, 1995; 62 FR 38450, July 18, 1997; 69 FR 51555, Aug. 20, 2004; 74 FR 48856, Sept. 25, 2009]

§ 404.461 Nonpayment of lump sum after death of alien outside United States for more than 6 months.

Where an individual dies outside the United States after January 1957 and no monthly benefit was or could have been paid to him for the month preceding the month in which he died because of the provisions described in § 404.460, no lump-sum death payment may be made upon the basis of the individual's earnings record.

§ 404.462 Nonpayment of hospital and medical insurance benefits of alien outside United States for more than 6 months.

No payments may be made under part A (hospital insurance benefits) of title XVIII for items or services furnished to an individual in any month for which the prohibition described in § 404.460 against payment of benefits to an individual outside the United States for more than six full consecutive calendar months is applicable (or would be if he were entitled to any such benefits). Also, no payments may be made under part B (supplementary medical insurance benefits) of title XVIII for expenses incurred by an individual during any month the individual is not paid a monthly benefit by reason of the provisions described in § 404.460 or for which no monthly benefit would be paid if he were otherwise entitled thereto.

§ 404.463 Nonpayment of benefits of aliens outside the United States; "foreign social insurance system," and "treaty obligation" exceptions defined.

(a) *Foreign social insurance system exception.* The following criteria are used to evaluate the social insurance or pension system of a foreign country to determine whether the exception described in § 404.460(b) to the alien nonpayment provisions applies:

(1) *Social insurance or pension system.* A *social insurance system* means a governmental plan which pays benefits as an earned right, on the basis either of contributions or work in employment covered under the plan, without regard to the financial need of the beneficiary. However, a plan of this type may still be regarded as a *social insurance system* though it may provide, in a subordinate fashion, for a supplemental payment based on need. A *pension system* means a governmental plan which pays benefits based on residence or age, or a private employer's plan for which the government has set up uniform standards for coverage, contributions, eligibility, and benefit amounts provided that, in both of these types of plans, the financial need of the beneficiary is not a consideration.

(2) *In effect.* The social insurance or pension system of the foreign country must be *in effect.* This means that the foreign social insurance or pension system is in full operation with regard to taxes (or contributions) and benefits, or is in operation with regard to taxes (or contributions), and provision is made for payments to begin immediately upon the expiration of the period provided in the law for acquiring earliest eligibility. It is not *in effect* if the law leaves the beginning of operation to executive or other administrative action; nor is it in effect if the law has been temporarily suspended.

(3) *General application.* The term *of general application* means that the social insurance or pension system (or combination of systems) covers a substantial portion of the paid labor force in industry and commerce, taking into consideration the industrial classification and size of the paid labor force and the population of the country, as well

as occupational, size of employer, and geographical limitations on coverage.

(4) *Periodic benefit or actuarial equivalent.* The term *periodic benefit* means a benefit payable at stated regular intervals of time such as weekly, biweekly, or monthly. *Actuarial equivalent* of a periodic benefit means the commutation of the value of the periodic benefit into a lump-sum payment, taking life expectancy and interest into account.

(5) *Benefits payable on account of old age, retirement, or death.* The requirement that benefits be payable *on account of old age, retirement, or death,* is satisfied if the foreign social insurance plan or system includes provision for payment of benefits to aged or retired persons and to dependents and survivors of covered workers. The requirement is also met where the system pays benefits based only on old age or retirement. The requirement is not met where the only benefits payable are workmen's compensation payments, cash sickness payments, unemployment compensation payments, or maternity insurance benefits.

(6) *System under which U.S. citizens who qualify may receive payment while outside the foreign country.* The foreign social insurance or pension system must permit payments to qualified U.S. citizens while outside such foreign country, regardless of the duration of their absence therefrom and must make the payments without restriction or qualification to these U.S. citizens at full rate, or at the full actuarial value. The foreign system is considered to pay benefits at the full rate if the U.S. citizen receives the full benefit rate in effect for qualified beneficiaries at the time of his award, whether he is then inside or outside the paying country; and he continues to receive the same benefit amount so long as he remains outside that country, even though he may not receive any increases going into effect after his award provided that in those other countries in which such increases are denied to beneficiaries, they are denied to all beneficiaries including nationals of the paying country.

(7) *List of countries which meet the social insurance or pension system exception in section 202(t)(2) of the act.* The following countries have been found to have in effect a social insurance or pension system which meets the requirements of section 202(t)(2) of the Act. Unless otherwise specified, each country meets such requirements effective January 1957. The effect of these findings is that beneficiaries who are citizens of such countries and not citizens of the United States may be paid benefits regardless of the duration of their absence from the United States unless for months beginning after June 1968 they are residing in a country to which payments to individuals are being withheld by the Treasury Department pursuant to the first section of the Act of October 9, 1940 (31 U.S.C. 123). Further additions to or deletions from the list of countries will be published in the FEDERAL REGISTER.

Antigua and Barbuda (effective November 1981)
Argentina (effective July 1968)
Austria (except from January 1958 through June 1961)
Bahamas, Commonwealth of the (effective October 1974)
Barbados (effective July 1968)
Belgium (effective July 1968)
Belize (effective September 1981)
Bolivia
Brazil
Burkina Faso, Republic of (formerly Upper Volta)
Canada (effective January 1966)
Chile
Colombia (effective January 1967)
Costa Rica (effective May 1962)
Cyprus (effective October 1964)
Czechoslovakia (effective July 1968)
Denmark (effective April 1964)
Dominica (effective November 1978)
Dominican Republic (effective November 1984)
Ecuador
El Salvador (effective January 1969)
Finland (effective May 1968)
France (effective June 1968)
Gabon (effective June 1964)
Grenada (effective April 1983)
Guatemala (effective October 1978)
Guyana (effective September 1969)
Iceland (effective December 1980)
Ivory Coast
Jamaica (effective July 1968)
Liechtenstein (effective July 1968)
Luxembourg
Malta (effective September 1964)
Mexico (effective March 1968)
Monaco
Netherlands (effective July 1968)
Nicaragua (effective May 1986)
Norway (effective June 1968)
Panama

Peru (effective February 1969)
Philippines (effective June 1960)
Poland (effective March 1957)
Portugal (effective May 1968)
San Marino (effective January 1965)
Spain (effective May 1966)
St. Christopher and Nevis (effective September 1983)
St. Lucia (effective August 1984)
Sweden (effective July 1966)
Switzerland (effective July 1968)
Trinidad and Tobago (effective July 1975)
Trust Territory of the Pacific Islands (Micronesia) (effective July 1976)
Turkey
United Kingdom
Western Samoa (effective August 1972)
Yugoslavia
Zaire (effective July 1961) (formerly Congo (Kinshasa))

(b) *The ''treaty obligation'' exception.* It is determined that the Treaties of Friendship, Commerce, and Navigation now in force between the United States and the Federal Republic of Germany, Greece, the Republic of Ireland, Israel, Italy, and Japan, respectively, create treaty obligations precluding the application of § 404.460(a) to citizens of such countries; and that the Treaty of Friendship, Commerce, and Navigation now in force between the United States and the Kingdom of the Netherlands creates treaty obligations precluding the application of § 404.460(a) to citizens of that country with respect to monthly survivors benefits only. There is no treaty obligation that would preclude the application of § 404.460(a) to citizens of any country other than those listed above.

[32 FR 19159, Dec. 20, 1967, as amended at 43 FR 2628, Jan. 18, 1978; 52 FR 8249, Mar. 17, 1987]

§ 404.464 How does deportation or removal from the United States affect the receipt of benefits?

(a) *Old-age or disability insurance benefits.* (1) You cannot receive an old-age or disability benefit for any month that occurs after the month we receive notice from the Secretary of Homeland Security or the Attorney General of the United States that you were:

(i) Deported under the provisions of section 241(a) of the Immigration and Nationality Act (INA) that were in effect before April 1, 1997, unless your deportation was under:

(A) Paragraph (1)(C) of that section; or

(B) Paragraph (1)(E) of that section and we received notice of your deportation under this paragraph before March 3, 2004;

(ii) Removed as deportable under the provisions of section 237(a) of the INA as in effect beginning April 1, 1997, unless your removal was under:

(A) Paragraph (1)(C) of that section; or

(B) Paragraph (1)(E) of that section and we received notice of your removal under this paragraph before March 3, 2004; or

(iii) Removed as inadmissible under the provisions of section 212(a)(6)(A) of the INA as in effect beginning April 1, 1997.

(2) Benefits that cannot be paid to you because of your deportation or removal under paragraph (a)(1) of this section may again be payable for any month subsequent to your deportation or removal that you are lawfully admitted to the United States for permanent residence. You are considered lawfully admitted for permanent residence as of the month you enter the United States with permission to reside here permanently.

(b) *Dependents or survivors benefits.* If an insured person on whose record you are entitled cannot be paid (or could not have been paid while still alive) an old-age or disability benefit for a month(s) because of his or her deportation or removal under paragraph (a)(1) of this section, you cannot be paid a dependent or survivor benefit on the insured person's record for that month(s) unless:

(1) You are a U.S citizen; or

(2) You were present in the United States for the entire month. (This means you were not absent from the United States for any period during the month, no matter how short.)

(c) *Lump sum death payment.* A lump sum death payment cannot be paid on the record of a person who died:

(1) In or after the month we receive from the Secretary of Homeland Security or the Attorney General of the United States notice of his or her deportation or removal under the provisions of the INA specified in paragraph

(a)(1) of this section (excluding the exceptions under paragraphs (a)(1)(i)(A) and (B) and (ii)(A) and (B) of this section); and

(2) Before the month in which the deceased person was thereafter lawfully admitted to the United States for permanent residence.

[70 FR 16411, Mar. 31, 2005]

§ 404.465 Conviction for subversive activities; effect on monthly benefits and entitlement to hospital insurance benefits.

(a) *Effect of conviction.* Where an individual is convicted of any offense (committed after August 1, 1956) under chapter 37 (relating to espionage and censorship), chapter 105 (relating to sabotage), or chapter 115 (relating to treason, sedition, and subversive activities) of title 18 U.S.C., or under section 4, 112, or 113 of the Internal Security Act of 1950, as amended, the court, in addition to all other penalties provided by law, may order that, in determining whether any monthly benefit is payable to the individual for the month in which he is convicted or for any month thereafter, and in determining whether the individual is entitled to hospital insurance benefits under part A of title XVIII for any such month, and in determining the amount of the benefit for that month, the following are not to be taken into account:

(1) Any wages paid to such individual, or to any other individual, in the calendar quarter in which such conviction occurred or in any prior calendar quarter, and

(2) Any net earnings from self-employment derived by the individual, or any other individual, during the taxable year in which the conviction occurred or during any prior taxable year.

(b) *Recalculation of benefit.* When notified by the Attorney General that the additional penalty as described in paragraph (a) of this section has been imposed against any individual entitled to benefits under section 202 or section 223 of the Act (see subpart D), the Administration, for the purposes of determining the individual's entitlement to such benefits as of the month in which convicted and the amount of the benefit, will exclude the applicable wages and net earnings in accordance with the order of the court.

(c) *Effect of pardon.* In the event that an individual, with respect to whom the additional penalty as described in paragraph (a) of this section has been imposed, is granted a pardon of the offense by the President of the United States, such penalty is not applied in determining such individual's entitlement to benefits, and the amount of such benefit, for any month beginning after the date on which the pardon is granted.

§ 404.466 Conviction for subversive activities; effect on enrollment for supplementary medical insurance benefits.

An individual may not enroll under part B (supplementary medical insurance benefits) of title XVIII if he has been convicted of any offense described in § 404.465.

§ 404.467 Nonpayment of benefits; individual entitled to disability insurance benefits or childhood disability benefits based on statutory blindness is engaging in substantial gainful activity.

(a) *Disability insurance benefits.* An individual who has attained age 55 and who meets the definition of disability for disability insurance benefits purposes based on *statutory blindness*, as defined in § 404.1581, may be entitled to disability insurance benefits for months in which he is engaged in certain types of substantial gainful activity. No payment, however, may be made to the individual or to beneficiaries entitled to benefits on his earnings record for any month in which such individual engages in any type of substantial gainful activity.

(b) *Childhood disability benefits.* An individual who has attained age 55 and who meets the definition of disability prescribed in § 404.1583 for childhood disability benefits on the basis of statutory blindness may be entitled to childhood disability benefits for months in which he engages in certain types of substantial gainful activity. However, no payment may be made to such individual for any month after

December 1972 in which such individual engages in substantial gainful activity.

[39 FR 43715, Dec. 18, 1974, as amended at 51 FR 10616, Mar. 28, 1986]

§ 404.468 Nonpayment of benefits to prisoners.

(a) *General.* No monthly benefits will be paid to any individual for any month any part of which the individual is confined in a jail, prison, or other penal institution or correctional facility for conviction of a felony. This rule applies to disability benefits (§ 404.315) and child's benefits based on disability (§ 404.350) effective with benefits payable for months beginning on or after October 1, 1980. For all other monthly benefits, this rule is effective with benefits payable for months beginning on or after May 1, 1983. However, it applies only to the prisoner; benefit payments to any other person who is entitled on the basis of the prisoner's wages and self-employment income are payable as though the prisoner were receiving benefits.

(b) *Felonious offenses.* An offense will be considered a felony if—

(1) It is a felony under applicable law: or

(2) In a jurisdiction which does not classify any crime as a felony, it is an offense punishable by death or imprisonment for a term exceeding one year.

(c) *Confinement.* In general, a jail, prison, or other penal institution or correctional facility is a facility which is under the control and jurisdiction of the agency in charge of the penal system or in which convicted criminals can be incarcerated. Confinement in such a facility continues as long as the individual is under a sentence of confinement and has not been released due to parole or pardon. An individual is considered confined even though he or she is temporarily or intermittently outside of that facility (e.g., on work release, attending school, or hospitalized).

(d) *Vocational rehabilitation exception.* The nonpayment provision of paragraph (a) of this section does not apply if a prisoner who is entitled to benefits on the basis of disability is actively and satisfactorily participating in a rehabilitation program which has been specifically approved for the individual by court of law. In addition, the Commissioner must determine that the program is expected to result in the individual being able to do substantial gainful activity upon release and within a reasonable time. No benefits will be paid to the prisoner for any month prior to the approval of the program.

[49 FR 48182, Dec. 11, 1984, as amended at 62 FR 38450, July 18, 1997]

§ 404.469 Nonpayment of benefits where individual has not furnished or applied for a Social Security number.

No monthly benefits will be paid to an entitled individual unless he or she either furnishes to the Social Security Administration (SSA) satisfactory proof of his or her Social Security number, or, if the individual has not been assigned a number, he or she makes a proper application for a number (see § 422.103). An individual submits satisfactory proof of his or her Social Security number by furnishing to SSA the number and sufficient additional information that can be used to determine whether that Social Security number or another number has been assigned to the individual. Sufficient additional information may include the entitled individual's date and place of birth, mother's maiden name, and father's name. If the individual does not know his or her Social Security number, SSA will use this additional information to determine the Social Security number, if any, that it assigned to the individual. This rule applies to individuals who become entitled to benefits beginning on or after June 1, 1989.

[56 FR 41789, Aug. 23, 1991]

§ 404.470 Nonpayment of disability benefits due to noncompliance with rules regarding treatment for drug addiction or alcoholism.

(a) *Suspension of monthly benefits.* (1) For an individual entitled to benefits based on a disability (§ 404.1505) and for whom drug addiction or alcoholism is a contributing factor material to the determination of disability (as described in § 404.1535), monthly benefits will be suspended beginning with the first month after we notify the individual in

writing that he or she has been determined not to be in compliance with the treatment requirements for such individuals (§ 404.1536).

(2) This rule applies to all individuals entitled to disability benefits (§ 404.315), widow(er)'s benefits (§ 404.335), and child's benefits based on a disability (§ 404.350) effective with benefits paid in months beginning on or after March 1, 1995.

(3) Benefit payments to any other person who is entitled on the basis of a disabled wage earner's entitlement to disability benefits are payable as though the disabled wage earner were receiving benefits.

(b) *Resumption of monthly benefits.* The payment of benefits may be resumed only after an individual demonstrates and maintains compliance with appropriate treatment requirements for:

(1) 2 consecutive months for the first determination of noncompliance;

(2) 3 consecutive months for the second determination of noncompliance; and

(3) 6 consecutive months for the third and all subsequent determinations of noncompliance.

(c) *Termination of benefits.* (1) A suspension of benefit payments due to noncompliance with the treatment requirements for 12 consecutive months will result in termination of benefits effective with the first month following the 12th month of suspension of benefits.

(2) Benefit payments to any other person who is entitled on the basis of a disabled wage earner's entitlement to disability benefits are payable as though the disabled wage earner were receiving benefits.

[60 FR 8146, Feb. 10, 1995]

§ 404.471 Nonpayment of disability benefits for trial work period service months upon a conviction of fraudulently concealing work activity.

(a) *Nonpayment of benefits during the trial work period.* Beginning with work activity performed in March 2004 and thereafter, if you are convicted by a Federal court of fraudulently concealing your work activity and the concealment of the work activity occurred while you were in a trial work period, monthly disability benefits under title II of the Social Security Act are not payable for months in which you performed services during that trial work period prior to the conviction (see § 404.1592 for a definition of a trial work period and services). Benefits already received for months of work activity in the trial work period prior to the conviction and in the same period of disability during which the fraudulently concealed work activity occurred, will be considered an overpayment on the record.

(b) *Concealment of work activity.* You can be found to be fraudulently concealing work activity if—

(1) You provide false information to us concerning the amount of earnings you received or are receiving for a particular period;

(2) You received or are receiving disability benefits while engaging in work activity under another identity (this would include working under another social security number or a forged social security number); or

(3) You take other actions to conceal work activity with the intent of fraudulently obtaining benefits in excess of amounts that are due.

[71 FR 66866, Nov. 17, 2006]

§ 404.480 Paying benefits in installments: Drug addiction or alcoholism.

(a) *General.* For disabled beneficiaries who receive benefit payments through a representative payee because drug addiction or alcoholism is a contributing factor material to the determination of disability (as described in § 404.1535), certain amounts due the beneficiary for a past period will be paid in installments. The amounts subject to payment in installments include:

(1) Benefits due but unpaid which accrued prior to the month payment was effectuated;

(2) Benefits due but unpaid which accrued during a period of suspension for which the beneficiary was subsequently determined to have been eligible; and

(3) Any adjustment to benefits which results in an accrual of unpaid benefits.

(b) *Installment formula.* Except as provided in paragraph (c) of this section,

the amount of the installment payment in any month is limited so that the sum of (1) the amount due for a past period (and payable under paragraph (a) of this section) paid in such month and (2) the amount of any benefit due for the preceding month under such entitlement which is payable in such month, does not exceed two times the amount of the beneficiary's benefit payment for the preceding month. In counting the amount of the beneficiary's benefit payment for the previous month, no reductions or deductions under this title are taken into account.

(c) *Exception to installment limitation.* An exception to the installment payment limitation in paragraph (b) of this section can be granted for the first month in which a beneficiary accrues benefit amounts subject to payment in installments if the beneficiary has unpaid housing expenses which result in a high risk of homelessness for the beneficiary. In that case, the benefit payment may be increased by the amount of the unpaid housing expenses so long as that increase does not exceed the amount of benefits which accrued during the most recent period of nonpayment. We consider a person to be at risk of homelessness if continued nonpayment of the outstanding housing expenses is likely to result in the person losing his or her place to live or if past nonpayment of housing expenses has resulted in the person having no appropriate personal place to live. In determining whether this exception applies, we will ask for evidence of outstanding housing expenses that shows that the person is likely to lose or has already lost his or her place to live. For purposes of this section, homelessness is the state of not being under the control of any public institution and having no appropriate personal place to live. Housing expenses include charges for all items required to maintain shelter (for example, mortgage payments, rent, heating fuel, and electricity).

(d) *Payment through a representative payee.* If the beneficiary does not have a representative payee, payment of amounts subject to installments cannot be made until a representative payee is selected.

(e) *Underpaid beneficiary no longer entitled.* In the case of a beneficiary who is no longer currently entitled to monthly payments, but to whom amounts defined in paragraph (a) of this section are still owing, we will treat such beneficiary's monthly benefit for the last month of entitlement as the beneficiary's benefit for the preceding month and continue to make installment payments of such benefits through a representative payee.

(f) *Beneficiary currently not receiving Social Security benefits because of suspension for noncompliance with treatment.* If a beneficiary is currently not receiving benefits because his or her benefits have been suspended for noncompliance with treatment (as defined in § 404.1536), the payment of amounts under paragraph (a) of this section will stop until the beneficiary has demonstrated compliance with treatment as described in § 404.470 and will again commence with the first month the beneficiary begins to receive benefit payments.

(g) *Underpaid beneficiary deceased.* Upon the death of a beneficiary, any remaining unpaid amounts as defined in paragraph (a) of this section will be treated as underpayments in accordance with § 404.503(b).

[60 FR 8146, Feb. 10, 1995]

Subpart F—Overpayments, Underpayments, Waiver of Adjustment or Recovery of Overpayments, and Liability of a Certifying Officer

AUTHORITY: Secs. 204, 205(a), 702(a)(5), and 1147 of the Social Security Act (42 U.S.C. 404, 405(a), 902(a)(5), and 1320b–17); 31 U.S.C. 3711; 31 U.S.C. 3716; 31 U.S.C. 3720A.

§ 404.501 General applicability of section 204 of the Act.

(a) *In general.* Section 204 of the Act provides for adjustment as set forth in §§ 404.502 and 404.503, in cases where an individual has received more or less than the correct payment due under title II of the Act. As used in this subpart, the term *overpayment* includes a payment in excess of the amount due

under title II of the Act, a payment resulting from the failure to impose deductions or to suspend or reduce benefits under sections 203, 222(b), 224, and 228(c), and (d), and (e) of the Act (see subpart E of this part), a payment pursuant to section 205(n) of the Act in an amount in excess of the amount to which the individual is entitled under section 202 or 223 of the Act, a payment resulting from the failure to terminate benefits, and a payment where no amount is payable under title II of the Act. The term *underpayment* as used in this subpart refers only to monthly insurance benefits and includes nonpayment where some amount of such benefits was payable. An underpayment may be in the form of an accrued unpaid benefit amount for which no check has been drawn or in the form of an unnegotiated check payable to a deceased individual. The provisions for adjustment also apply in cases where through error:

(1) A reduction required under section 202(j)(1), 202(k)(3), 203(a), or 205(n) of the Act is not made, or

(2) An increase or decrease required under section 202(d)(2), or 215 (f) or (g) of the Act is not made, or

(3) A deduction required under section 203(b) (as may be modified by the provisions of section 203(h)), 203(c), 203(d), 203(i), 222(b), or 223(a)(1)(D) of the Act or section 907 of the Social Security Amendments of 1939 is not made, or

(4) A suspension required under section 202(n) or 202(t) of the Act is not made, or

(5) A reduction under section 202(q) of the Act is not made, or

(6) A reduction, increase, deduction, or suspension is made which is either more or less than required, or

(7) A payment in excess of the amount due under title XVIII of the Act was made to or on behalf of an individual (see 42 CFR 405.350 through 405.351) entitled to benefits under title II of the Act, or

(8) A payment of past due benefits is made to an individual and such payment had not been reduced by the amount of attorney's fees payable directly to an attorney under section 206 of the Act (see § 404.977).

(9) A reduction under § 404.408b is made which is either more or less than required.

(b) *Payments made on the basis of an erroneous report of death.* Any monthly benefit or lump sum paid under title II of the Act on the basis of an erroneous report by the Department of Defense of the death of an individual in the line of duty while such individual was a member of the uniformed services (as defined in section 210(m) of the Act) on active duty (as defined in section 210(l) of the Act) is deemed a correct payment for any month prior to the month such Department notifies the Administration that such individual is alive.

(c) *Payments made by direct deposit to a financial institution.* When a payment in excess of the amount due under title II of the Act is made by direct deposit to a financial institution to or on behalf of an individual who has died, and the financial institution credits the payment to a joint account of the deceased individual and another person who was entitled to a monthly benefit on the basis of the same earnings record as the deceased individual for the month before the month in which the deceased individual died, the amount of the payment in excess of the correct amount will be an overpayment to the other person.

[34 FR 14887, Sept. 27, 1969, as amended at 44 FR 34942, June 18, 1979; 47 FR 4988, Feb. 3, 1982; 48 FR 46149, Oct. 11, 1983; 55 FR 7313, Mar. 1, 1990]

§ 404.502 Overpayments.

Upon determination that an overpayment has been made, adjustments will be made against monthly benefits and lump sums as follows:

(a) *Individual overpaid is living.* (1) If the individual to whom an overpayment was made is at the time of a determination of such overpayment entitled to a monthly benefit or a lump sum under title II of the Act, or at any time thereafter becomes so entitled, no benefit for any month and no lump sum is payable to such individual, except as provided in paragraphs (c) and (d) of this section, until an amount equal to the amount of the overpayment has been withheld or refunded. Such adjustments will be made against any monthly benefit or lump sum under

title II of the Act to which such individual is entitled whether payable on the basis of such individual's earnings or the earnings of another individual.

(2) If any other individual is entitled to benefits for any month on the basis of the same earnings as the overpaid individual, except as adjustment is to be effected pursuant to paragraphs (c) and (d) of this section by withholding a part of the monthly benefit of either the overpaid individual or any other individual entitled to benefits on the basis of the same earnings, no benefit for any month will be paid on such earnings to such other individual until an amount equal to the amount of the overpayment has been withheld or refunded.

(3) If a representative payee receives a payment on behalf of a beneficiary after that beneficiary dies, the representative payee or his estate is solely liable for repaying the overpayment. If the representative payee is entitled to a monthly benefit or a lump sum under title II of the Act at the time we determine that an overpayment exists or at any time thereafter, except as provided in paragraphs (c) and (d) of this section, we will not pay the monthly benefits or the lump sum to the representative payee until the amount of the overpayment has been repaid. We will make such adjustments against any monthly benefit or lump sum under title II of the Act to which the representative payee is entitled whether payable on the basis of such representative payee's earnings or the earnings of another individual.

(b) *Individual overpaid dies before adjustment.* If an overpaid individual dies before adjustment is completed under the provisions of paragraph (a) of this section, no lump sum and no subsequent monthly benefit will be paid on the basis of earnings which were the basis of the overpayment to such deceased individual until full recovery of the overpayment has been effected, except as provided in paragraphs (c) and (d) of this section or under § 404.515. Such recovery may be effected through:

(1) Payment by the estate of the deceased overpaid individual,

(2) Withholding of amounts due the estate of such individual under title II of the Act,

(3) Withholding a lump sum or monthly benefits due any other individual on the basis of the same earnings which were the basis of the overpayment to the deceased overpaid individual, or

(4) Any combination of the amount above.

(5) The methods in paragraphs (b)(1) and (b)(2) of this section for overpayments owed by a representative payee for payments made after the beneficiary's death. We will not recover such overpayments from any person other than the individual who was representative payee or his estate, but we may recover these overpayments from such other person under § 404.503(b).

(c) *Adjustment by withholding part of a monthly benefit.* (1) Where it is determined that withholding the full amount each month would *defeat the purpose of title II, i.e.*, deprive the person of income required for ordinary and necessary living expenses (see § 404.508), adjustment under paragraphs (a) and (b) of this section may be effected by withholding an amount of not less than $10 of the monthly benefit payable to an individual.

(2) Adjustment as provided by this paragraph will not be available if the overpayment was caused by the individual's intentional false statement or representation, or willful concealment of, or deliberate failure to furnish, material information. In such cases, recovery of the overpayment will be accomplished as provided in paragraph (a) of this section.

(d) *Individual overpaid enrolled under supplementary insurance plan.* Notwithstanding the provisions of paragraphs (a), (b), and (c) of this section, if the individual liable for the overpayment is an enrollee under part B of title XVIII of the Act and the overpayment was not caused by such individual's intentional false statement or representation, or willful concealment of, or deliberate failure to furnish, material information, an amount of such individual's monthly benefit which is equal to

his obligation for supplementary medical insurance premiums will be applied toward payment of such premiums, and the balance of the monthly benefit will be applied toward recovery of the overpayment. Further adjustment with respect to such balance may be made if the enrollee so requests and meets the conditions of paragraph (c) of this section.

[35 FR 5943, Apr. 10, 1970, as amended at 44 FR 20653, Apr. 6, 1979; 73 FR 65542, Nov. 4, 2008]

§ 404.502a Notice of right to waiver consideration.

Whenever an initial determination is made that more than the correct amount of payment has been made, and we seek adjustment or recovery of the overpayment, the individual from whom we are seeking adjustment or recovery is immediately notified. The notice includes:

(a) The overpayment amount and how and when it occurred;

(b) A request for full, immediate refund, unless the overpayment can be withheld from the next month's benefit;

(c) The proposed adjustment of benefits if refund is not received within 30 days after the date of the notice and adjustment of benefits is available;

(d) An explanation of the availability of a different rate of withholding when full withholding is proposed, installment payments when refund is requested and adjustment is not currently available, and/or cross-program recovery when refund is requested and the individual is receiving another type of payment from SSA (language about cross-program recovery is not included in notices sent to individuals in jurisdictions where this recovery option is not available);

(e) An explanation of the right to request waiver of adjustment or recovery and the automatic scheduling of a file review and pre-recoupment hearing (commonly referred to as a personal conference) if a request for waiver cannot be approved after initial paper review;

(f) An explanation of the right to request reconsideration of the fact and/or amount of the overpayment determination;

(g) Instructions about the availability of forms for requesting reconsideration and waiver;

(h) An explanation that if the individual does not request waiver or reconsideration within 30 days of the date of the overpayment notice, adjustment or recovery of the overpayment will begin;

(i) A statement that an SSA office will help the individual complete and submit forms for appeal or waiver requests; and

(j) A statement that the individual receiving the notice should notify SSA promptly if reconsideration, waiver, a lesser rate of withholding, repayment by installments or cross-program adjustment is wanted.

[61 FR 56131, Oct. 31, 1996]

§ 404.503 Underpayments.

Underpayments will be adjusted as follows:

(a) *Individual underpaid is living.* If an individual to whom an underpayment is due is living, the amount of such underpayment will be paid to such individual either in a single payment (if he is not entitled to a monthly benefit or a lump-sum death payment) or by increasing one or more monthly benefits or a lump-sum death payment to which such individual is or becomes entitled. However, if we determine that the individual to whom an underpayment is due also received an overpayment as defined in § 404.501(a) for a different period, we will apply any underpayment due the individual to reduce that overpayment, unless we have waived recovery of the overpayment under the provisions of §§ 404.506 through 404.512.

(b) *Individual dies before adjustment of underpayment.* If an individual who has been underpaid dies before receiving payment or negotiating a check or checks representing such payment, we first apply any amounts due the deceased individual against any overpayments as defined in § 404.501(a) owed by the deceased individual, unless we have waived recovery of such overpayment under the provisions of §§ 404.506 through 404.512. We then will distribute any remaining underpayment to the living person (or persons) in the highest order of priority as follows:

(1) The deceased individual's surviving spouse as defined in section 216(c), (g), or (h) of the Act who was either:

(i) Living in the same household (as defined in § 404.347) with the deceased individual at the time of such individual's death, or

(ii) Entitled to a monthly benefit on the basis of the same earnings record as was the deceased individual for the month in which such individual died.

(2) The child or children of the deceased individual (as defined in section 216 (e) or (h) of the Act) entitled to a monthly benefit on the basis of the same earnings record as was the deceased individual for the month in which such individual died (if more than one such child, in equal shares to each such child).

(3) The parent or parents of the deceased individual, entitled to a monthly benefit on the basis of the same earnings record as was the deceased individual for the month in which such individual died (if more than one such parent, in equal shares to each such parent). For this purpose, the definition of ''parent'' in § 404.374 includes the parent(s) of any deceased individual who was entitled to benefits under title II of the Act.

(4) The surviving spouse of the deceased individual (as defined in section 216(c), (g), or (h) of the Act) who does not qualify under paragraph (b)(1) of this section.

(5) The child or children of the deceased individual (as defined in section 216 (e) or (h) of the Act) who do not qualify under paragraph (b)(2) of this section (if more than one such child, in equal shares to each such child).

(6) The parent or parents of the deceased individual, who do not qualify under paragraph (b)(3) of this section (if more than one such parent, in equal shares to each such parent). For this purpose, the definition of ''parent'' in § 404.374 includes the parent(s) of any deceased individual who was entitled to benefits under title II of the Act.

(7) The legal representative of the estate of the deceased individual as defined in paragraph (d) of this section.

(c) In the event that a person who is otherwise qualified to receive an underpayment under the provisions of paragraph (b) of this section, dies before receiving payment or before negotiating the check or checks representing such payment, his share of the underpayment will be divided among the remaining living person(s) in the same order of priority. In the event that there is (are) no other such person(s), the underpayment will be paid to the living person(s) in the next lower order of priority under paragraph (b) of this section.

(d) *Definition of legal representative.* The term *legal representative*, for the purpose of qualifying to receive an underpayment, generally means the administrator or executor of the estate of the deceased individual. However, it may also include an individual, institution or organization acting on behalf of an unadministered estate, provided that such person can give the Administration good acquittance (as defined in paragraph (e) of this section). The following persons may qualify as legal representative for the purposes of this subpart, provided they can give the Administration good acquittance:

(1) A person who qualifies under a State's *small estate* statute,

(2) A person resident in a foreign country who, under the laws and customs of that country, has the right to receive assets of the estate,

(3) A public administrator, or

(4) A person who has the authority, under applicable law, to collect the assets of the estate of the deceased individual.

(e) *Definition of ''good acquittance.''* A person is considered to give the Administration *good acquittance* when payment to that person will release the Administration from further liability for such payment.

[34 FR 14487, Sept. 27, 1969, as amended at 35 FR 14129, Sept. 5, 1970; 55 FR 7313, Mar. 1, 1990; 60 FR 17445, Apr. 6, 1995; 73 FR 65543, Nov. 4, 2008]

§ 404.504 Relation to provisions for reductions and increases.

The amount of an overpayment or underpayment is the difference between the amount paid to the beneficiary and the amount of the payment to which the beneficiary was actually entitled. Such payment, for example,

would be equal to the difference between the amount of a benefit in fact paid to the beneficiary and the amount of such benefit as reduced under section 202(j)(1), 202(k)(3), 203(a), or 224(a), or as increased under section 202(d)(2), 202(m), or 215 (f) and (g). In effecting an adjustment with respect to an overpayment, no amount can be considered as having been withheld from a particular benefit which is in excess of the amount of such benefit as so decreased.

[34 FR 14888, Sept. 27, 1969]

§ 404.505 Relationship to provisions requiring deductions.

Adjustments required by any of the provisions in this subpart F are made in addition to, but after, any deductions required by section 202(t), 203(b), 203(c), 203(d), and 222(b) of the Act, or section 907 of the Social Security Act Amendments of 1939, and before any deductions required by section 203(g) or 203(h)(2) of the Act.

[34 FR 14888, Sept. 27, 1969]

§ 404.506 When waiver may be applied and how to process the request.

(a) Section 204(b) of the Act provides that there shall be no adjustment or recovery in any case where an overpayment under title II has been made to an individual who is without fault if adjustment or recovery would either defeat the purpose of title II of the Act, or be against equity and good conscience.

(b) If an individual requests waiver of adjustment or recovery of a title II overpayment within 30 days after receiving a notice of overpayment that contains the information in § 404.502a, no adjustment or recovery action will be taken until after the initial waiver determination is made. If the individual requests waiver more than 30 days after receiving the notice of overpayment, SSA will stop any adjustment or recovery actions until after the initial waiver determination is made.

(c) When waiver is requested, the individual gives SSA information to support his/her contention that he/she is without fault in causing the overpayment (see § 404.507) and that adjustment or recovery would either defeat the purpose of title II of the Act (see § 404.508) or be against equity and good conscience (see § 404.509). That information, along with supporting documentation, is reviewed to determine if waiver can be approved. If waiver cannot be approved after this review, the individual is notified in writing and given the dates, times and place of the file review and personal conference; the procedure for reviewing the claims file prior to the personal conference; the procedure for seeking a change in the scheduled dates, times, and/or place; and all other information necessary to fully inform the individual about the personal conference. The file review is always scheduled at least 5 days before the personal conference. We will offer to the individual the option of conducting the personal conference face-to-face at a place we designate, by telephone, or by video teleconference. The notice will advise the individual of the date and time of the personal conference.

(d) At the file review, the individual and the individual's representative have the right to review the claims file and applicable law and regulations with the decisionmaker or another SSA representative who is prepared to answer questions. We will provide copies of material related to the overpayment and/or waiver from the claims file or pertinent sections of the law or regulations that are requested by the individual or the individual's representative.

(e) At the personal conference, the individual is given the opportunity to:

(1) Appear personally, testify, cross-examine any witnesses, and make arguments;

(2) Be represented by an attorney or other representative (see § 404.1700), although the individual must be present at the conference; and

(3) Submit documents for consideration by the decisionmaker.

(f) At the personal conference, the decisionmaker:

(1) Tells the individual that the decisionmaker was not previously involved in the issue under review, that the waiver decision is solely the decisionmaker's, and that the waiver decision

is based only on the evidence or information presented or reviewed at the conference;

(2) Ascertains the role and identity of everyone present;

(3) Indicates whether or not the individual reviewed the claims file;

(4) Explains the provisions of law and regulations applicable to the issue;

(5) Briefly summarizes the evidence already in file which will be considered;

(6) Ascertains from the individual whether the information presented is correct and whether he/she fully understands it;

(7) Allows the individual and the individual's representative, if any, to present the individual's case;

(8) Secures updated financial information and verification, if necessary;

(9) Allows each witness to present information and allows the individual and the individual's representative to question each witness;

(10) Ascertains whether there is any further evidence to be presented;

(11) Reminds the individual of any evidence promised by the individual which has not been presented;

(12) Lets the individual and the individual's representative, if any, present any proposed summary or closing statement;

(13) Explains that a decision will be made and the individual will be notified in writing; and

(14) Explains repayment options and further appeal rights in the event the decision is adverse to the individual.

(g) SSA issues a written decision to the individual (and his/her representative, if any) specifying the findings of fact and conclusions in support of the decision to approve or deny waiver and advising of the individual's right to appeal the decision. If waiver is denied, adjustment or recovery of the overpayment begins even if the individual appeals.

(h) If it appears that the waiver cannot be approved, and the individual declines a personal conference or fails to appear for a second scheduled personal conference, a decision regarding the waiver will be made based on the written evidence of record. Reconsideration is then the next step in the appeals process (but see § 404.930(a)(7)).

[61 FR 56131, Oct. 31, 1996, as amended at 73 FR 1973, Jan. 11, 2008]

§ 404.507 Fault.

Fault as used in *without fault* (see § 404.506 and 42 CFR 405.355) applies only to the individual. Although the Administration may have been at fault in making the overpayment, that fact does not relieve the overpaid individual or any other individual from whom the Administration seeks to recover the overpayment from liability for repayment if such individual is not without fault. In determining whether an individual is at fault, the Social Security Administration will consider all pertinent circumstances, including the individual's age and intelligence, and any physical, mental, educational, or linguistic limitations (including any lack of facility with the English language) the individual has. What constitutes fault (except for *deduction overpayments*—see § 404.510) on the part of the overpaid individual or on the part of any other individual from whom the Administration seeks to recover the overpayment depends upon whether the facts show that the incorrect payment to the individual or to a provider of services or other person, or an incorrect payment made under section 1814(e) of the Act, resulted from:

(a) An incorrect statement made by the individual which he knew or should have known to be incorrect; or

(b) Failure to furnish information which he knew or should have known to be material; or

(c) With respect to the overpaid individual only, acceptance of a payment which he either knew or could have been expected to know was incorrect.

[34 FR 14888, Sept. 27, 1969; 34 FR 15646, Oct. 9, 1969, as amended at 44 FR 34942, June 18, 1979; 59 FR 1634, Jan. 12, 1994]

§ 404.508 Defeat the purpose of Title II.

(a) *General. Defeat the purpose of title II*, for purposes of this subpart, means defeat the purpose of benefits under this title, *i.e.*, to deprive a person of income required for ordinary and necessary living expenses. This depends upon whether the person has an income

or financial resources sufficient for more than ordinary and necessary needs, or is dependent upon all of his current benefits for such needs. An individual's ordinary and necessary expenses include:

(1) Fixed living expenses, such as food and clothing, rent, mortgage payments, utilities, maintenance, insurance (e.g., life, accident, and health insurance including premiums for supplementary medical insurance benefits under title XVIII), taxes, installment payments, etc.;

(2) Medical, hospitalization, and other similar expenses;

(3) Expenses for the support of others for whom the individual is legally responsible; and

(4) Other miscellaneous expenses which may reasonably be considered as part of the individual's standard of living.

(b) *When adjustment or recovery will defeat the purpose of title II.* Adjustment or recovery will defeat the purposes of title II in (but is not limited to) situations where the person from whom recovery is sought needs substantially all of his current income (including social security monthly benefits) to meet current ordinary and necessary living expenses.

[32 FR 18026, Dec. 16, 1967, as amended at 34 FR 14888, Sept. 27, 1969]

§ 404.509 Against equity and good conscience; defined.

(a) Recovery of an overpayment is *against equity and good conscience* (under title II and title XVIII) if an individual—

(1) Changed his or her position for the worse (Example 1) or relinquished a valuable right (Example 2) because of reliance upon a notice that a payment would be made or because of the overpayment itself; or

(2) Was living in a separate household from the overpaid person at the time of the overpayment and did not receive the overpayment (Examples 3 and 4).

(b) The individual's financial circumstances are not material to a finding of *against equity and good conscience.*

Example 1. A widow, having been awarded benefits for herself and daughter, entered her daughter in private school because the monthly benefits made this possible. After the widow and her daughter received payments for almost a year, the deceased worker was found to be not insured and all payments to the widow and child were incorrect. The widow has no other funds with which to pay the daughter's private school expenses. Having entered the daughter in private school and thus incurred a financial obligation toward which the benefits had been applied, she was in a worse position financially than if she and her daughter had never been entitled to benefits. In this situation, the recovery of the payments would be *against equity and good conscience.*

Example 2. After being awarded old-age insurance benefits, an individual resigned from employment on the assumption he would receive regular monthly benefit payments. It was discovered 3 years later that (due to a Social Security Administration error) his award was erroneous because he did not have the required insured status. Due to his age, the individual was unable to get his job back and could not get any other employment. In this situation, recovery of the overpayments would be *against equity and good conscience* because the individual gave up a valuable right.

Example 3. M divorced K and married L. M died a few years later. When K files for benefits as a surviving divorced wife, she learns that L had been overpaid $3,200 on M's earnings record. Because K and L are both entitled to benefits on M's record of earnings and we could not recover the overpayment from L, we sought recovery from K. K was living in a separate household from L at the time of the overpayment and did not receive the overpayment. K requests waiver of recovery of the $3,200 overpayment from benefits due her as a surviving divorced wife of M. In this situation, it would be *against equity and good conscience* to recover the overpayment from K.

Example 4. G filed for and was awarded benefits. His daughter, T, also filed for student benefits on G's earnings record. Since T was an independent, full-time student living in another State, she filed for benefits on her own behalf. Later, after T received 12 monthly benefits, the school reported that T had been a full-time student only 2 months and had withdrawn from school. Since T was overpaid 10 monthly benefits, she was requested to return the overpayment to SSA. T did not return the overpayment and further attempts to collect the overpayment were unsuccessful. G was asked to repay the overpayment because he was receiving benefits on the same earnings record. G requested waiver. To support his waiver request G established that he was not at fault in causing the overpayment because he did not know that T was receiving benefits. Since G is

without fault and, in addition, meets the requirements of not living in the same household at the time of the overpayment and did not receive the overpayment, it would be *against equity and good conscience* to recover the overpayment from G.

[53 FR 25483, July 7, 1988]

§ 404.510 When an individual is "without fault" in a deduction overpayment.

In determining whether an individual is ''without fault'' with respect to a deduction overpayment, the Social Security Administration will consider all pertinent circumstances, including the individual's age and intelligence, and any physical, mental, educational, or linguistic limitations (including any lack of facility with the English language) the individual has. Except as provided in § 404.511 or elsewhere in this subpart F, situations in which an individual will be considered to be ''without fault'' with respect to a deduction overpayment include, but are not limited to, those that are described in this section. An individual will be considered ''without fault'' in accepting a payment which is incorrect because he/she failed to report an event specified in sections 203 (b) and (c) of the Act, or an event specified in section 203(d) of the Act as in effect for monthly benefits for months after December 1960, or because a deduction is required under section 203 (b), (c), (d), or section 222(b) of the Act, or payments were not withheld as required by section 202(t) or section 228 of the Act, if it is shown that such failure to report or acceptance of the overpayment was due to one of the following circumstances:

(a) Reasonable belief that only his net cash earnings (*take-home* pay) are included in determining the annual earnings limitation or the monthly earnings limitation under section 203(f) of the Act.

(b) Reliance upon erroneous information from an official source within the Social Security Administration (or other governmental agency which the individual had reasonable cause to believe was connected with the administration of benefits under title II of the Act) with respect to the interpretation of a pertinent provision of the Social Security Act or regulations pertaining thereto. For example, this circumstance could occur where the individual is misinformed by such source as to the interpretation of a provision in the Act or regulations relating to deductions, or relating to the effect of residence of an alien outside the United States for more than 6 months.

(c) The beneficiary's death caused the earnings limit applicable to his earnings for purposes of deduction and the charging of excess earnings to be reduced below $1,680 for a taxable year ending after 1967.

(d) [Reserved]

(e) Reasonable belief that in determining, for deduction purposes, his earnings from employment and/or net earnings from self-employment in the taxable year in which he became entitled to benefits, earnings in such year prior to such entitlement would be excluded. However, this provision does not apply if his earnings in the taxable year, beginning with the first month of entitlement, exceeded the earnings limitation amount for such year.

(f) Unawareness that his earnings were in excess of the earnings limitation applicable to the imposition of deductions and the charging of excess earnings or that he should have reported such excess where these earnings were greater than anticipated because of:

(1) Retroactive increases in pay, including back-pay awards;

(2) Work at a higher pay rate than realized;

(3) Failure of the employer of an individual unable to keep accurate records to restrict the amount of earnings or the number of hours worked in accordance with a previous agreement with such individual;

(4) The occurrence of five Saturdays (or other work days, e.g., five Mondays) in a month and the earnings for the services on the fifth Saturday or other work day caused the deductions.

(g) The continued issuance of benefit checks to him after he sent notice to the Administration of the event which caused or should have caused the deductions provided that such continued issuance of checks led him to believe in good faith that he was entitled to checks subsequently received.

(h) Lack of knowledge that bonuses, vacation pay, or similar payments,

constitute earnings for purposes of the annual earnings limitation.

(i) [Reserved]

(j) Reasonable belief that earnings in excess of the earnings limitation amount for the taxable year would subject him to deductions only for months beginning with the first month in which his earnings exceeded the earnings limitation amount. However, this provision is applicable only if he reported timely to the Administration during the taxable year when his earnings reached the applicable limitation amount for such year.

(k) Lack of knowledge by a wife, husband, or child entitled to wife's, husband's, or child's insurance benefits, as the case may be, that the individual entitled to old-age insurance benefits on the same earnings record has incurred or would incur deductions because of a violation of the annual earnings or 7–day foreign work test, whichever is applicable, provided the wife, husband, or child is not living with such old-age insurance beneficiary and did not know and had no reason to know that such beneficiary's earnings activity or the income derived therefrom has caused or would cause such deductions.

(l) Reasonable belief, with respect to earnings activity for months after December 1982, that net earnings from self-employment after attainment of age 70 (age 72 for months after December 1972 and before January 1983) in the taxable year in which such age was attained would not cause deductions (see §404.430(a)) with respect to benefits payable for months in that taxable year prior to the attainment of such age.

(m) Reasonable belief by an individual entitled to child's, wife's, husband's, widow's, widower's, mother's, or parent's insurance benefits that earnings from employment and/or net earnings from self-employment after the termination of entitlement (other than termination by reason of entitlement to an old-age insurance benefit) in the taxable year in which the termination event occurred would not cause deductions with respect to benefits payable for months in that taxable year prior to the month in which the termination event occurred.

(n) Failure to understand the deduction provisions of the Act or the occurrence of unusual or unavoidable circumstances the nature of which clearly shows that the individual was unaware of a violation of such deduction provisions.

[27 FR 1162, Feb. 8, 1962, as amended at 28 FR 14492, Dec. 31, 1963; 34 FR 14888, Sept. 27, 1969; 36 FR 23361, Dec. 9, 1971; 43 FR 31318, July 21, 1978; 44 FR 20653, Apr. 6, 1979; 59 FR 1634, Jan. 12, 1994; 60 FR 17445, Apr. 6, 1995]

§404.510a When an individual is "without fault" in an entitlement overpayment.

A benefit payment under title II or title XVIII of the Act to or on behalf of an individual who fails to meet one or more requirements for entitlement to such payment or a benefit payment exceeding the amount to which he is entitled, constitutes an entitlement overpayment. Where an individual or other person on behalf of an individual accepts such overpayment because of reliance on erroneous information from an official source within the Social Security Administration (or other governmental agency which the individual had reasonable cause to believe was connected with the administration of benefits under title II or title XVIII of the Act) with respect to the interpretation of a pertinent provision of the Social Security Act or regulations pertaining thereto, or where an individual or other person on behalf of an individual is overpaid as a result of the adjustment upward (under the family maximum provision in section 203 of the Act) of the benefits of such individual at the time of the proper termination of one or more beneficiaries on the same social security record and the subsequent reduction of the benefits of such individual caused by the reentitlement of the terminated beneficiary(ies) pursuant to a change in a provision of the law, such individual, in accepting such overpayment, will be deemed to be *without fault*. For purposes of this section *governmental agency* includes intermediaries and carriers under contract pursuant to sections 1816 and 1842 of the Act.

[39 FR 43716, Dec. 18, 1974]

§ 404.511 When an individual is at "fault" in a deduction overpayment.

(a) *Degree of care.* An individual will not be *without fault* if the Administration has evidence in its possession which shows either a lack of good faith or failure to exercise a high degree of care in determining whether circumstances which may cause deductions from his benefits should be brought to the attention of the Administration by an immediate report or by return of a benefit check. The high degree of care expected of an individual may vary with the complexity of the circumstances giving rise to the overpayment and the capacity of the particular payee to realize that he is being overpaid. Accordingly, variances in the personal circumstances and situations of individual payees are to be considered in determining whether the necessary degree of care has been exercised by an individual to warrant a finding that he was without fault in accepting a *deduction overpayment.*

(b) *Subsequent deduction overpayments.* The Social Security Administration generally will not find an individual to be without fault where, after having been exonerated for a ''deduction overpayment'' and after having been advised of the correct interpretation of the deduction provision, the individual incurs another ''deduction overpayment'' under the same circumstances as the first overpayment. However, in determining whether the individual is without fault, the Social Security Administration will consider all of the pertinent circumstances surrounding the prior and subsequent ''deduction overpayments,'' including any physical, mental, educational, or linguistic limitations (including any lack of facility with the English language) which the individual may have.

[16 FR 13054, Dec. 28, 1951, as amended at 59 FR 1634, Jan. 12, 1994]

§ 404.512 When adjustment or recovery of an overpayment will be waived.

(a) *Adjustment or recovery deemed ''against equity and good conscience.''* In the situations described in §§ 404.510(a), (b), and (c), and 404.510a, adjustment or recovery will be waived since it will be deemed such adjustment or recovery is *against equity and good conscience.* Adjustment or recovery will also be deemed *against equity and good conscience* in the situation described in § 404.510(e), but only as to a month in which the individual's earnings from wages do not exceed the total monthly benefits affected for that month.

(b) *Adjustment or recovery considered to defeat the purpose of title II* or be *against equity and good conscience* under certain circumstances. In the situation described in § 404.510(e) (except in the case of an individual whose monthly earnings from wages in employment do not exceed the total monthly benefits affected for a particular month), and in the situations described in § 404.510 (f) through (n), adjustment or recovery shall be waived only where the evidence establishes that adjustment or recovery would work a financial hardship (see § 404.508) or would otherwise be inequitable (see § 404.509).

[27 FR 1163, Feb. 8, 1962, as amended at 35 FR 6321, Apr. 18, 1970; 36 FR 23361, Dec. 9, 1971]

§ 404.513 Liability of a certifying officer.

No certifying or disbursing officer shall be held liable for any amount certified or paid by him to any individual.

(a) Where adjustment or recovery of such amount is waived under section 204(b) of the Act; or

(b) Where adjustment under section 204(a) of the Act is not completed prior to the death of all individuals against whose benefits or lump sums deductions are authorized; or

(c) Where a claim for recovery of an overpayment is compromised or collection or adjustment action is suspended or terminated pursuant to the Federal Claims Collection Act of 1966 (31 U.S.C. 951–953) (see § 404.515).

[34 FR 14889, Sept. 27, 1969]

§ 404.515 Collection and compromise of claims for overpayment.

(a) *General effect of the Debt Collection Improvement Act of 1996.* Claims by the Administration against an individual for recovery of overpayments under title II or title XVIII (not including title XVIII overpayments for which refund is requested from providers, physicians, or other suppliers of services) of the Act, not exceeding the sum of

$100,000 or any higher amount authorized by the Attorney General, exclusive of interest, may be compromised, or collection suspended or terminated where such individual or his estate does not have the present or prospective ability to pay the full amount of the claim within a reasonable time (see paragraph (c) of this section) or the cost of collection is likely to exceed the amount of recovery (see paragraph (d) of this section) except as provided under paragraph (b) of this section.

(b) *When there will be no compromise, suspension or termination of collection of a claim for overpayment*—(1) *Overpaid individual alive.* In any case where the overpaid individual is alive, a claim for overpayment will not be compromised, nor will there be suspension or termination of collection of the claim by the Administration if there is an indication of fraud, the filing of a false claim, or misrepresentation on the part of such individual or on the part of any other party having an interest in the claim.

(2) *Overpaid individual deceased.* In any case where the overpaid individual is deceased (i) a claim for overpayment in excess of $5,000 will not be compromised, nor will there be suspension or termination of collection of the claim by the Administration if there is an indication of fraud; the filing of a false claim, or misrepresentation on the part of such deceased individual, and (ii) a claim for overpayment regardless of the amount will not be compromised, nor will there be suspension or termination of collection of the claim by the Administration if there is an indication that any person other than the deceased overpaid individual had a part in the fraudulent action which resulted in the overpayment.

(c) *Inability to pay claim for recovery of overpayment.* In determining whether the overpaid individual is unable to pay a claim for recovery of an overpayment under title II or title XVIII of the Act, the Administration will consider such individual's age, health, present and potential income (including inheritance prospects), assets (e.g., real property, savings account), possible concealment or improper transfer of assets, and assets or income of such individual which may be available in enforced collection proceedings. The Administration will also consider exemptions available to such individual under the pertinent State or Federal law in such proceedings. In the event the overpaid individual is deceased, the Administration will consider the available assets of the estate, taking into account any liens or superior claims against the estate.

(d) *Cost of collection or litigative probabilities.* Where the probable costs of recovering an overpayment under title II or title XVIII of the Act would not justify enforced collection proceedings for the full amount of the claim or there is doubt concerning the Administration's ability to establish its claim as well as the time which it will take to effect such collection, a compromise or settlement for less than the full amount will be considered.

(e) *Amount of compromise.* The amount to be accepted in compromise of a claim for overpayment under title II or title XVIII of the Act shall bear a reasonable relationship to the amount which can be recovered by enforced collection proceedings giving due consideration to the exemptions available to the overpaid individual under State or Federal law and the time which such collection will take.

(f) *Payment.* Payment of the amount which the Administration has agreed to accept as a compromise in full settlement of a claim for recovery of an overpayment under title II or title XVIII of the Act must be made within the time and in the manner set by the Administration. A claim for such recovery of the overpayment shall not be considered compromised or settled until the full payment of the compromised amount has been made within the time and manner set by the Administration. Failure of the overpaid individual or his estate to make such payment as provided shall result in reinstatement of the full amount of the overpayment less any amounts paid prior to such default.

[34 FR 14889, Sept. 27, 1969; 34 FR 15413, Oct. 3, 1969, as amended at 79 FR 33684, June 12, 2014]

§ 404.520 Referral of overpayments to the Department of the Treasury for tax refund offset—General.

(a) The standards we will apply and the procedures we will follow before requesting the Department of the Treasury to offset income tax refunds due taxpayers who have an outstanding overpayment are set forth in §§ 404.520 through 404.526. These standards and procedures are authorized by 31 U.S.C. 3720A and are implemented through Department of the Treasury regulations at 31 CFR 285.2.

(b) We will use the Department of the Treasury tax refund offset procedure to collect overpayments that are certain in amount, past due and legally enforceable, and eligible for tax refund offset under regulations issued by the Department of the Treasury. We will use these procedures to collect overpayments only from persons who are not currently entitled to monthly Social Security benefits under title II of the Act. We will refer overpayments to the Department of the Treasury for offset against Federal tax refunds regardless of the length of time the debts have been outstanding.

[62 FR 64277, Dec. 5, 1997, as amended at 76 FR 65108, Oct. 20, 2011]

§ 404.521 Notice to overpaid persons.

Before we request the collection of an overpayment by reduction of Federal and State income tax refunds, we will send a written notice of intent to the overpaid person. In our notice of intent to collect an overpayment through tax refund offset, we will state:

(a) The amount of the overpayment; and

(b) That we will collect the overpayment by requesting that the Department of the Treasury reduce any amounts payable to the overpaid person as refunds of Federal and State income taxes by an amount equal to the amount of the overpayment unless, within 60 calendar days from the date of our notice, the overpaid person:

(1) Repays the overpayment in full; or

(2) Provides evidence to us at the address given in our notice that the overpayment is not past due or legally enforceable; or

(3) Asks us to waive collection of the overpayment under section 204(b) of the Act.

(c) The conditions under which we will waive recovery of an overpayment under section 204(b) of the Act;

(d) That we will review any evidence presented that the overpayment is not past due or not legally enforceable;

(e) That the overpaid person has the right to inspect and copy our records related to the overpayment as determined by us and will be informed as to where and when the inspection and copying can be done after we receive notice from the overpaid person that inspection and copying are requested.

[56 FR 52468, Oct. 21, 1991, as amended at 62 FR 64278, Dec. 5, 1997; 76 FR 65108, Oct. 20, 2011]

§ 404.522 Review within SSA that an overpayment is past due and legally enforceable.

(a) *Notification by overpaid individual.* An overpaid individual who receives a notice as described in § 404.521 has the right to present evidence that all or part of the overpayment is not past due or not legally enforceable. To exercise this right, the individual must notify us and present evidence regarding the overpayment within 60 calendar days from the date of our notice.

(b) *Submission of evidence.* The overpaid individual may submit evidence showing that all or part of the debt is not past due or not legally enforceable as provided in paragraph (a) of this section. Failure to submit the notification and evidence within 60 calendar days will result in referral of the overpayment to the Department of the Treasury, unless the overpaid individual, within this 60-day time period, has asked us to waive collection of the overpayment under section 204(b) of the Act and we have not yet determined whether we can grant the waiver request. If the overpaid individual asks us to waive collection of the overpayment, we may ask that evidence to support the request be submitted to us.

(c) *Review of the evidence.* After a timely submission of evidence by the overpaid individual, we will consider all available evidence related to the overpayment. If the overpaid individual has not requested a waiver we

will make findings based on a review of the written record, unless we determine that the question of indebtedness cannot be resolved by a review of the documentary evidence. If the overpaid individual has asked us to make a waiver determination and our records do not show that after an oral hearing we had previously determined that he was at ''fault'' in accepting the overpayment, we will not deny the waiver request without first scheduling an oral hearing.

[56 FR 52469, Oct. 21, 1991, as amended at 62 FR 64278, Dec. 5, 1997]

§ 404.523 Findings by SSA.

(a) Following the hearing or a review of the record, we will issue written findings which include supporting rationale for the findings. Issuance of these findings concerning whether the overpayment or part of the overpayment is past due and legally enforceable is the final Agency action with respect to the past-due status and enforceability of the overpayment. If we make a determination that a waiver request cannot be granted, we will issue a written notice of this determination in accordance with the regulations in subpart J of this part. Our referral of the overpayment to the Department of the Treasury will not be suspended under § 404.525 pending any further administrative review of the waiver request that the individual may seek.

(b) Copies of the findings described in paragraph (a) of this section will be distributed to the overpaid individual and the overpaid individual's attorney or other representative, if any.

(c) If the findings referred to in paragraph (a) of this section affirm that all or part of the overpayment is past due and legally enforceable and, if waiver is requested, we determine that the request cannot be granted, we will refer the overpayment to the Department of the Treasury. No referral will be made to the Department of the Treasury if, based on our review of the overpayment, we reverse our prior finding that the overpayment is past due and legally enforceable or, upon consideration of a waiver request, we determine that waiver of our collection of the overpayment is appropriate.

[56 FR 52469, Oct. 21, 1991, as amended at 62 FR 64278, Dec. 5, 1997]

§ 404.524 Review of our records related to the overpayment.

(a) *Notification by the overpaid individual.* An overpaid individual who intends to inspect or copy our records related to the overpayment as determined by us must notify us stating his or her intention to inspect or copy.

(b) *Our response.* In response to a notification by the overpaid individual as described in paragraph (a) of this section, we will notify the overpaid individual of the location and time when the overpaid individual may inspect or copy our records related to the overpayment. We may also, at our discretion, mail copies of the overpayment-related records to the overpaid individual.

[56 FR 52469, Oct. 21, 1991]

§ 404.525 Suspension of offset.

If, within 60 days of the date of the notice described in § 404.521, the overpaid individual notifies us that he or she is exercising a right described in § 404.522(a) and submits evidence pursuant to § 404.522(b) or requests a waiver under § 404.506, we will suspend any notice to the Department of the Treasury until we have issued written findings that affirm that an overpayment is past due and legally enforceable and, if applicable, make a determination that a waiver request cannot be granted.

[56 FR 52469, Oct. 21, 1991, as amended at 62 FR 64278, Dec. 5, 1997]

§ 404.526 Tax refund insufficient to cover amount of overpayment.

If a tax refund for a given taxable year is insufficient to recover an overpayment completely, the case will remain with the Department of the Treasury for offset, assuming that all criteria for offset continue to be met.

[62 FR 64278, Dec. 5, 1997]

§ 404.527 Additional methods for recovery of title II benefit overpayments.

(a) *General.* In addition to the methods specified in §§ 404.502 and 404.520, an

overpayment under title II of the Act is also subject to recovery under the rules in subparts D and E of part 422 of this chapter. Subpart D of part 422 of this chapter applies only under the following conditions:

(1) The overpayment occurred after the individual has attained age 18;

(2) The overpaid individual is no longer entitled to benefits under title II of the Act; and

(3) Pursuant to paragraph (b) of this section, we have determined that the overpayment is otherwise unrecoverable under section 204 of the Act.

(b) *When an overpayment is considered to be otherwise unrecoverable.* An overpayment under title II of the Act is considered to be otherwise unrecoverable under section 204 of the Act if all of the following conditions are met:

(1) Our billing system sequence has been completed (*i.e.*, we have sent the individual an initial notice of the overpayment, a reminder notice, and a past-due notice) or collection activity has been suspended or terminated in accordance with the Federal Claims Collection Standards in 31 CFR 903.2 or 903.3.

(2) We have not entered into an installment payment arrangement with the overpaid individual or, if we have entered into such an arrangement, the overpaid individual has failed to make any payment for two consecutive months.

(3) The overpaid individual has not requested waiver pursuant to § 404.506 or § 404.522 or, after a review conducted pursuant to those sections, we have determined that we will not waive collection of the overpayment.

(4) The overpaid individual has not requested reconsideration of the initial overpayment determination pursuant to §§ 404.907 and 404.909 or, after a review conducted pursuant to § 404.913, we have affirmed, in whole or in part, the initial overpayment determination.

(5) The overpayment cannot be recovered pursuant to § 404.502 by adjustment of benefits payable to any individual other than the overpaid individual. For purposes of this paragraph, an overpayment will be deemed to be unrecoverable from any individual who was living in a separate household from the overpaid person at the time of the overpayment and did not receive the overpayment.

[62 FR 64278, Dec. 5, 1997, as amended at 68 FR 74183, Dec. 23, 2003]

§ 404.530 Are title VIII and title XVI benefits subject to adjustment to recover title II overpayments?

(a) *Definitions*—(1) *Cross-program recovery*. Cross-program recovery is the process that we will use to collect title II overpayments from benefits payable to you under title VIII and title XVI of the Act.

(2) *Benefits payable*. For purposes of this section, benefits payable means the amount of title VIII or title XVI benefits you actually would receive. For title VIII benefits, it includes your monthly benefit and any past-due benefits after any reduction by the amount of income for the month as described in §§ 408.505 through 408.515 of this chapter. For title XVI benefits, it includes your monthly benefit and any past-due benefits as described in § 416.420 of this chapter.

(b) *When may we collect title II overpayments using cross-program recovery?* We may use cross-program recovery to collect a title II overpayment you owe when benefits are payable to you under title VIII, title XVI, or both.

[70 FR 15, Jan. 3, 2005]

§ 404.535 How much will we withhold from your title VIII and title XVI benefits to recover a title II overpayment?

(a) If past-due benefits are payable to you, we will withhold the lesser of the entire overpayment balance or the entire amount of past-due benefits.

(b)(1) We will collect the overpayment from current monthly benefits due in a month under title VIII and title XVI by withholding the lesser of the amount of the entire overpayment balance or:

(i) 10 percent of the monthly title VIII benefits payable for that month and

(ii) in the case of title XVI benefits, an amount no greater than the lesser of the benefit payable for that month or an amount equal to 10 percent of your income for that month (including such monthly benefit but excluding payments under title II when recovery

is also made from title II benefits and excluding income excluded pursuant to §§ 416.1112 and 416.1124 of this chapter).

(2) Paragraph (b)(1) of this section does not apply if:

(i) You request and we approve a different rate of withholding, or

(ii) You or your spouse willfully misrepresented or concealed material information in connection with the overpayment.

(c) In determining whether to grant your request that we withhold less than the amount described in paragraph (b)(1) of this section, we will use the criteria applied under § 404.508 to similar requests about withholding from title II benefits.

(d) If you or your spouse willfully misrepresented or concealed material information in connection with the overpayment, we will collect the overpayment by withholding the lesser of the overpayment balance or the entire amount of title VIII and title XVI benefits payable to you. We will not collect at a lesser rate. (See § 416.571 of this chapter for what we mean by concealment of material information.)

[70 FR 15, Jan. 3, 2005]

§ 404.540 Will you receive notice of our intention to apply cross-program recovery?

Before we collect an overpayment from you using cross-program recovery, we will send you a written notice that tells you the following information:

(a) We have determined that you owe a specific overpayment balance that can be collected by cross-program recovery;

(b) We will withhold a specific amount from the title VIII or title XVI benefits (see § 404.535);

(c) You may ask us to review this determination that you still owe this overpayment balance;

(d) You may request that we withhold a different amount from your current monthly benefits (the notice will not include this information if § 404.535(d) applies); and

(e) You may ask us to waive collection of this overpayment balance.

[70 FR 15, Jan. 3, 2005]

§ 404.545 When will we begin cross-program recovery from current monthly benefits?

(a) We will begin collecting the overpayment balance from your title VIII or title XVI current monthly benefits or payments by cross-program recovery no sooner than 30 calendar days after the date of the notice described in § 404.540. If within that 30-day period you pay us the full overpayment balance stated in the notice, we will not begin cross-program recovery.

(b) If within that 30-day period you ask us to review our determination that you still owe us this overpayment balance, we will not begin cross-program recovery from your current monthly benefits before we review the matter and notify you of our decision in writing.

(c) If within that 30-day period you ask us to withhold a different amount than the amount stated in the notice, we will not begin cross-program recovery from your current monthly benefits until we determine the amount we will withhold. This paragraph does not apply when § 404.535(d) applies.

(d) If within that 30-day period you ask us to waive recovery of the overpayment balance, we will not begin cross-program recovery from your current monthly benefits before we review the matter and notify you of our decision in writing. See §§ 404.506 through 404.512.

[70 FR 15, Jan. 3, 2005]

Subpart G—Filing of Applications and Other Forms

AUTHORITY: Secs. 202 (i), (j), (o), (p), and (r), 205(a), 216(i)(2), 223(b), 228(a), and 702(a)(5) of the Social Security Act (42 U.S.C. 402 (i), (j), (o), (p), and (r), 405(a), 416(i)(2), 423(b), 428(a), and 902(a)(5)).

SOURCE: 44 FR 37209, June 26, 1979, unless otherwise noted.

GENERAL PROVISIONS

§ 404.601 Introduction.

This subpart contains the Social Security Administration's rules for filing a claim for old-age, disability, dependents', and survivors' insurance benefits as described in subpart D of part 404. It

tells what an application is, who may sign it, where and when it must be signed and filed, the period of time it is in effect and how it may be withdrawn. This subpart also explains when a written statement, request, or notice will be considered filed. Since the application form and procedures for filing a claim under this subpart are the same as those used to establish entitlement to Medicare benefits under 42 CFR part 405, persons who wish to become entitled to Medicare benefits should refer to the provisions of this subpart. Requirements concerning applications for the black lung benefits program are contained in part 410. Requirements concerning applications for the supplemental security income program are contained in part 416. Part 422 contains the requirements for applying for a social security number.

§ 404.602 Definitions.

For the purpose of this subpart—

Applicant means the person who files an application for benefits for himself or herself or for someone else. A person who files for himself or herself is both the *applicant* and the *claimant*.

Application refers only to an application on a form described in § 404.611.

Benefits means any old-age, disability, dependents', and survivors' insurance benefits described in subpart D, including a period of disability.

Claimant means the person who files an application for benefits for himself or herself or the person for whom an application is filed.

We, *us*, or *our* means the Social Security Administration (SSA).

You or *your* means, as appropriate, the person who applies for benefits, the person for whom an application is filed, or the person who may consider applying for benefits.

§ 404.603 You must file an application to receive benefits.

In addition to meeting other requirements, you must file an application to become entitled to benefits. If you believe you may be entitled to benefits, you should file an application. Filing an application will—

(a) Permit a formal decision to be made on your entitlement to benefits;

(b) Protect your entitlement to any benefits that may be payable for as many as 6 months or 12 months (depending on the type of benefit, as explained in § 404.621) before the application was filed; and

(c) Give you the right to appeal if you are dissatisfied with the decision.

[44 FR 37209, June 26, 1979, as amended at 46 FR 47444, Sept. 28, 1981]

APPLICATIONS

§ 404.610 What makes an application a claim for benefits?

We will consider your application a claim for benefits if it generally meets all of the following conditions:

(a) You must file on a prescribed form, as stated in § 404.611. *See* § 422.505(a) of this chapter for the types of prescribed applications you can file.

(b) You must complete and file the application with us as stated in §§ 404.611 and 404.614.

(c) You, or someone described in § 404.612 who may sign an application for you, must sign the application.

(d) You must be alive at the time you file (unless one of the limited exceptions in § 404.615 applies).

[69 FR 498, Jan. 6, 2004]

§ 404.611 How do I file an application for Social Security benefits?

(a) *General rule.* You must apply for benefits on an application that we prescribe. *See* § 422.505(a) of this chapter for the types of applications we will accept. *See* § 404.614 for places where you can file your application for benefits.

(b) *What if I file a claim with the Railroad Retirement Board (RRB)?* If you file an application with the RRB on one of its forms for an annuity under section 2 of the Railroad Retirement Act, as amended, we will consider this an application for title II Social Security benefits, which you may be entitled to, unless you tell us otherwise.

(c) *What if I file a claim with the Department of Veterans Affairs (DVA)?* If you file an application with the DVA on one of its forms for survivors' dependency and indemnity compensation (*see* section 3005 of title 38 U.S.C.), we

will consider this an application for Social Security survivors' benefits, except for the lump sum death payment.

[69 FR 498, Jan. 6, 2004]

§ 404.612 Who may sign an application.

We will determine who may sign an application according to the following rules:

(a) A claimant who is 18 years old or over, mentally competent, and physically able to do so, must sign his or her own application. If the claim is for child's benefits for a person who is not yet 22 years old, the application may be signed by a parent or a person standing in place of the parent.

(b) A claimant who is between 16 and 18 years old may sign his or her own application if he or she is mentally competent, has no court appointed representative, and is not in the care of any person.

(c) If the claimant is under age 18, or mentally incompetent, or physically unable to sign, the application may be signed by a court appointed representative or a person who is responsible for the care of the claimant, including a relative. If the claimant is in the care of an institution, the manager or principal officer of the institution may sign the application.

(d) If a person who could receive disability benefits or who could have a period of disability established dies before filing, an application for disability benefits or for a period of disability may be signed by a person who would be qualified to receive any benefits due the deceased.

(e) If a written statement showing an intent to claim benefits is filed with us, but the person for whom the benefits are claimed dies before an application is filed, an application may be filed as explained in § 404.630(d).

(f) If a person who could receive benefits on the basis of a ''deemed'' filing date of an application under § 404.633 (b)(1)(i) or (b)(2)(i) dies before an application for the benefits is filed, the application may be signed by a person who would be qualified to receive any benefits due the deceased person as explained in § 404.633 (b)(1)(ii) and (b)(2)(ii).

(g) If it is necessary to protect a claimant from losing benefits and there is good cause for the claimant not signing the application, we may accept an application signed by some one other than a person described in this section.

Example: Mr. Smith comes to a social security office a few days before the end of a month to file an application for old-age benefits for his neighbor, Mr. Jones. Mr. Jones, a 63 year old widower, just suffered a heart attack and is in the hospital. He asked Mr. Smith to file the application for him. We will accept an application signed by Mr. Smith since it would not be possible to have Mr. Jones sign and file the application until the next calendar month and a loss of one month's benefits would result.

[44 FR 37209, June 26, 1979, as amended at 59 FR 44923, Aug. 31, 1994; 61 FR 41330, Aug. 8, 1996]

§ 404.613 Evidence of authority to sign an application for another.

(a) A person who signs an application for someone else will be required to provide evidence of his or her authority to sign the application for the person claiming benefits under the following rules:

(1) If the person who signs is a court appointed representative, he or she must submit a certificate issued by the court showing authority to act for the claimant.

(2) If the person who signs is not a court appointed representative, he or she must submit a statement describing his or her relationship to the claimant. The statement must also describe the extent to which the person is responsible for the care of the claimant. This latter information will not be requested if the application is signed by a parent for a child with whom he or she is living.

(3) If the person who signs is the manager or principal officer of an institution which is responsible for the care of the claimant, he or she must submit a statement indicating the person's position of responsibility at the institution.

(b) We may, at any time, require additional evidence to establish the authority of a person to sign an application for someone else.

§ 404.614 When an application or other form is considered filed.

(a) *General rule.* Except as otherwise provided in paragraph (b) of this section and in §§ 404.630 through 404.633 which relate to the filing date of an application, an application for benefits, or a written statement, request, or notice is filed on the day it is received by an SSA employee at one of our offices or by an SSA employee who is authorized to receive it at a place other than one of our offices.

(b) *Other places and dates of filing.* We will also accept as the date of filing—

(1) The date an application for benefits, or a written statement, request or notice is received by any office of the U.S. Foreign Service or by the Veterans Administration Regional Office in the Philippines;

(2) The date an application for benefits or a written statement, request or notice is mailed to us by the U.S. mail, if using the date we receive it would result in the loss or lessening of rights. The date shown by a U.S. postmark will be used as the date of mailing. If the postmark is unreadable, or there is no postmark, we will consider other evidence of when you mailed it to us; or

(3) The date an application for benefits is filed with the Railroad Retirement Board or the Veterans Administration. See § 404.611 (b) and (c) for an explanation of when an application for benefits filed with the Railroad Retirement Board or the Veterans Administration is considered an application for social security benefits.

[44 FR 37209, June 26, 1979, as amended at 59 FR 44923, Aug. 31, 1994]

§ 404.615 Claimant must be alive when an application is filed.

A claimant must be alive at the time an application is filed. There are the following exceptions to this general rule:

(a) If a disabled person dies before filing an application for disability benefits or a period of disability, a person who would be qualified to receive any benefits due the deceased may file an application. The application must be filed within 3 months after the month in which the disabled person died.

(b) If a written statement showing an intent to claim benefits is filed with us, but the person for whom the benefits are claimed dies before an application is filed, an application may be filed as explained in § 404.630(d).

(c) If a person who could receive benefits on the basis of a ''deemed'' filing date of an application under § 404.633 (b)(1)(i) or (b)(2)(i) dies before an application for the benefits is filed, the application may be signed by a person who would be qualified to receive any benefits due the deceased person as explained in § 404.633 (b)(1)(ii) and (b)(2)(ii).

[44 FR 37209, June 26, 1979, as amended at 59 FR 44923, Aug. 31, 1994; 61 FR 41330, Aug. 8, 1996]

§ 404.617 Pilot program for photographic identification of disability benefit applicants in designated geographic areas.

(a) To be eligible for Social Security disability insurance benefits in the designated pilot geographic areas during the time period of the pilot, you or a person acting on your behalf must give SSA permission to take your photograph and make this photograph a part of the claims folder. You must give us this permission when you apply for benefits and/or when we ask for it at a later time. Failure to cooperate will result in denial of benefits. We will permit an exception to the photograph requirement when an individual has a sincere religious objection. This pilot will be in effect for a six-month period after these final rules become effective.

(b) *Designated pilot geographic areas means:*

(1) All SSA field offices in the State of South Carolina.

(2) The Augusta, Georgia SSA field office.

(3) All SSA field offices in the State of Kansas.

(4) Selected SSA field offices located in New York City.

[68 FR 23194, May 1, 2003]

EFFECTIVE FILING PERIOD OF APPLICATION

§ 404.620 Filing before the first month you meet the requirements for benefits.

(a) *General rule.* If you file an application for benefits (except special age 72 payments) before the first month you meet all the other requirements for entitlement, the application will remain in effect until we make a final determination on your application unless there is an administrative law judge hearing decision on your application. If there is an administrative law judge hearing decision, your application will remain in effect until the administrative law judge hearing decision is issued.

(1) If you meet all the requirements for entitlement while your application is in effect, we may pay you benefits from the first month that you meet all the requirements.

(2) If you first meet all the requirements for entitlement after the period for which your application was in effect, you must file a new application for benefits. In this case, we may pay you benefits only from the first month that you meet all the requirements based on the new application.

(b) *Filing for special age 72 payments.* The requirements for entitlement to special age 72 payments must be met no later than 3 months after the month an application is filed.

[44 FR 37209, June 26, 1979, as amended at 52 FR 4003, Feb. 9, 1987]

§ 404.621 What happens if I file after the first month I meet the requirements for benefits?

(a) *Filing for disability benefits and for old-age, survivors', or dependents' benefits.* (1) If you file an application for disability benefits, widow's or widower's benefits based on disability, or wife's, husband's, or child's benefits based on the earnings record of a person entitled to disability benefits, after the first month you could have been entitled to them, you may receive benefits for up to 12 months immediately before the month in which your application is filed. Your benefits may begin with the first month in this 12-month period in which you meet all the requirements for entitlement. Your entitlement, however, to wife's or husband's benefits under this rule is limited by paragraph (a)(3) of this section.

(2) If you file an application for old-age benefits, widow's or widower's benefits not based on disability, wife's, husband's, or child's benefits based on the earnings record of a person not entitled to disability benefits, or mother's, father's, or parent's benefits, after the first month you could have been entitled to them, you may receive benefits for up to 6 months immediately before the month in which your application is filed. Your benefits may begin with the first month in this 6-month period in which you meet all the requirements for entitlement. Your entitlement, however, to old-age, wife's, husband's, widow's, or widower's benefits under this rule is limited by paragraph (a)(3) of this section.

(3) If the effect of the payment of benefits for a month before the month you file would be to reduce your benefits because of your age, you cannot be entitled to old-age, wife's, husband's, widow's, or widower's benefits for any month before the month in which your application is filed, unless you meet one of the conditions in paragraph (a)(4) of this section. (An explanation of the reduction that occurs because of age if you are entitled to these benefits for a month before you reach full retirement age, as defined in § 404.409, is in § 404.410.) An example follows that assumes you do not meet any of the conditions in paragraph (a)(4) of this section.

Example: You will attain full retirement age in March 2003. If you apply for old-age benefits in March, you cannot be entitled to benefits in the 6-month period before March because the payment of benefits for any of these months would result in your benefits being reduced for age. If you do not file your application until June 2003, you may be entitled to benefits for the month of March, April and May because the payment of benefits for these months would not result in your benefits being reduced for age. You will not, however, receive benefits for the 3 months before March.

(4) The limitation in paragraph (a)(3) of this section on your entitlement to old-age, wife's, husband's, widow's, or widower's benefits for months before

you file an application does not apply if:

(i) You are a widow, widower, surviving divorced wife, or surviving divorced husband who is disabled and could be entitled to retroactive benefits for any month before age 60. If you could not be entitled before age 60, the limitation will prevent payment of benefits to you for past months, but it will not affect the month you become entitled to hospital insurance benefits.

(ii) You are a widow, widower, or surviving divorced spouse of the insured person who died in the month before you applied and you were at least age 60 in the month of death of the insured person on whose earnings record you are claiming benefits. In this case, you can be entitled beginning with the month the insured person died if you choose and if you file your application on or after July 1, 1983.

(b) *Filing for lump-sum death payment.* An application for a lump-sum death payment must be filed within 2 years after the death of the person on whose earnings record the claim is filed. There are two exceptions to the 2-year filing requirement:

(1) If there is a good cause for failure to file within the 2-year period, we will consider your application as though it were filed within the 2-year period. Good cause does not exist if you were informed of the need to file an application within the 2-year period and you neglected to do so or did not desire to make a claim. Good cause will be found to exist if you did not file within the time limit due to—

(i) Circumstances beyond your control, such as extended illness, mental or physical incapacity, or a language barrier;

(ii) Incorrect or incomplete information we furnished you;

(iii) Your efforts to get evidence to support your claim without realizing that you could submit the evidence after filing an application; or

(iv) Unusual or unavoidable circumstances which show that you could not reasonably be expected to know of the time limit.

(2) The Soldiers' and Sailors' Civil Relief Act of 1940 provides for extending the filing time.

(c) *Filing for special age 72 payments.* An application for special age 72 payments is not effective as a claim for benefits for any month before you actually file.

(d) *Filing for a period of disability.* You must file an application for a period of disability while you are disabled or no later than 12 months after the month in which your period of disability ended. If you were unable to apply within the 12-month time period because of a physical or mental condition, you may apply not more than 36 months after your disability ended. The general rule we use to decide whether your failure to file was due to a physical or mental condition is stated in § 404.322.

(e) *Filing after death of person eligible for disability benefits or period of disability.* If you file for disability benefits or a period of disability for another person who died before filing an application and you would qualify under § 404.503(b) to receive any benefits due the deceased, you must file an application no later than the end of the third month following the month in which the disabled person died.

[68 FR 4711, Jan. 30, 2003]

§ 404.622 Limiting an application.

Your application may entitle you to benefits for up to 6 months or 12 months (depending on the type of benefit, as explained in § 404.621) before the month in which it is filed. You may limit the number of months of your entitlement in the 6-month or 12-month period. You may state this choice any time before a decision is made on your claim by indicating, in writing, the month you want your benefits to begin. You may change the first month of entitlement in this 6-month or 12-month period after a decision has been made on your claim under the following conditions:

(a) You file the request in writing.

(b) If you are filing for the claimant, he or she is alive when the request is filed.

(c) If any other person who is entitled to benefits would lose some or all of those benefits because of the change, that person, or the person who filed for him or her, consents in writing.

(d) Any benefit payments that would become improper as a result of the change in entitlement month are repaid, or we are satisfied that they will be repaid.

[44 FR 37209, June 26, 1979, as amended at 46 FR 47445, Sept. 28, 1981]

§ 404.623 Am I required to file for all benefits if I am eligible for old-age and husband's or wife's benefits?

(a) *Presumed filing for husband's or wife's benefits.* If you file an application for old-age benefits, you are presumed to have filed an application for husband's or wife's benefits in the first month of your entitlement to old-age benefits, if—

(1) Your old-age benefits are reduced for age because you choose to receive them before you reach full retirement age (as defined in § 404.409); and

(2) You are eligible for either a husband's or a wife's benefit for the first month of your entitlement to old-age benefits.

(b) *Presumed filing for old-age benefits.* If you file an application for a husband's or a wife's benefit, you are presumed to have filed an application for old-age benefits in the first month of your entitlement to husband's or wife's benefits if—

(1) Your husband's or wife's benefits are reduced for age because you choose to receive them before you reach full retirement age (as defined in § 404.409); and

(2) You are eligible for old-age benefits for the first month of your entitlement to husband's or wife's benefits.

(c) *Exception.* Paragraph (b) of this section does not apply if you are also entitled to disability benefits in the first month of your entitlement to husband's or wife's benefits. In this event, you are presumed to have filed for old-age benefits only if your disability benefits end before you reach full retirement age (as defined in § 404.409).

[68 FR 4712, Jan. 30, 2003]

FILING DATE BASED ON WRITTEN STATEMENT

§ 404.630 Use of date of written statement as filing date.

If a written statement, such as a letter, indicating your intent to claim benefits either for yourself or for another person is filed with us under the rules stated in § 404.614, we will use the filing date of the written statement as the filing date of the application, if all of the following requirements are met:

(a) The statement indicates an intent to claim benefits.

(b) The statement is signed by the claimant, the claimant's spouse, or a person described in § 404.612. If the claimant, the claimant's spouse, or a person described in § 404.612 telephones us and advises us of his or her intent to file a claim but cannot file an application before the end of the month, we will prepare and sign a written statement if it is necessary to prevent the loss of benefits. If the claimant, the claimant's spouse, or a person described in § 404.612 contacts us through the Internet by completing and transmitting the Personal Identification Information data on the Internet Social Security Benefit Application to us, we will use the date of the transmission as the filing date if it is necessary to prevent the loss of benefits.

(c) The claimant files an application with us on an application form as described in § 404.611, or one is filed for the claimant by a person described in § 404.612, within 6 months after the date of a notice we will send advising of the need to file an application. We will send the notice to the claimant. However, if it is clear from the information we receive that the claimant is a minor or is mentally incompetent, we will send the notice to the person who submitted the written statement.

(d) The claimant is alive when the application is filed; or if the claimant has died after the written statement was filed, an application is filed—

(1) By or for a person who would be eligible to receive benefits on the deceased's earnings record;

(2) By a person acting for the deceased's estate; or

(3) If the statement was filed with a hospital under § 404.632, by the hospital if—

(i) No person described in paragraph (d) (1) or (2) of this section can be located; or

(ii) A person described in paragraphs (d) (1) or (2) of this section is located

but refuses or fails to file the application unless the refusal or failure to file is because it would be harmful to the deceased person or the deceased's estate.

[44 FR 37209, June 26, 1979, as amended at 71 FR 24814, Apr. 27, 2006]

§ 404.631 Statements filed with the Railroad Retirement Board.

A written statement filed with the Railroad Retirement Board will be considered a written statement filed with us under the rules in § 404.630 if—

(a) The statement indicates an intent to claim any payments under the Railroad Retirement Act;

(b) It bears the signature of the person filing the statement;

(c) No application is filed with the Railroad Retirement Board on one of its forms. If an application has been filed, we will use the date of filing of that application as determined by the Railroad Retirement Board (see § 404.614(b)(3)); and

(d) The statement is sent to us by the Railroad Retirement Board.

§ 404.632 Statements filed with a hospital.

A statement (generally a hospital admission form) filed with a hospital may serve as a written statement under § 404.630 if the requirements of this section are met. The statement will be considered filed with us as of the date it was filed with the hospital and will serve to protect entitlement to benefits. A statement filed with a hospital by you or some other person for you requesting or indicating an intent to claim benefits will be considered a written statement filed with us and § 404.630 will apply to it if—

(a) You are a patient in the hospital;

(b) The hospital provides services covered by hospital insurance under the Medicare program;

(c) An application has not already been filed; and

(d) The statement is sent to us.

DEEMED FILING DATE BASED ON MISINFORMATION

§ 404.633 Deemed filing date in a case of misinformation.

(a) *General.* You may have considered applying for monthly benefits for yourself or for another person, and you may have contacted us in writing, by telephone or in person to inquire about filing an application for these benefits. It is possible that in responding to your inquiry, we may have given you misinformation about your eligibility for such benefits, or the eligibility of the person on whose behalf you were considering applying for benefits, which caused you not to file an application at that time. If this happened, and later an application for such benefits is filed with us, we may establish an earlier filing date under this section.

Example 1: Mrs. Smith, a widow of an insured individual, contacts a Social Security office when she reaches age 60 to inquire about applying for widow's insurance benefits. She is told by an SSA employee that she must be age 62 to be eligible for these benefits. This information, which was incorrect, causes Mrs. Smith not to file an application for benefits. When Mrs. Smith reaches age 62, she again contacts a Social Security office to ask about filing for widow's insurance benefits and learns that she could have received the benefits at age 60. She files an application for these benefits, provides the information required under paragraph (f) of this section to show that an SSA employee provided misinformation, and requests a deemed filing date based on the misinformation which she received from an SSA employee when she was age 60.

Example 2: Ms. Hill, a 22-year-old, is forced to stop work because of illness. When she contacts a Social Security office to inquire about applying for disability insurance benefits, she is told by an SSA employee that she must have 20 quarters of coverage out of the last 40 calendar quarters to be insured for disability insurance benefits. The employee fails to consider the special rules for insured status for persons who become disabled before age 31 and, consequently, tells Ms. Hill that she is not insured because she only has 16 quarters of coverage. The misinformation causes Ms. Hill not to file an application for disability insurance benefits. Because of her illness, she is unable to return to work. A year later, Ms. Hill reads an article that indicates that there are special rules for insured status for young workers who become disabled. She again contacts a Social Security office to inquire about benefits based on

disability and learns that she was misinformed earlier about her insured status. She files an application for disability insurance benefits, provides the information required under paragraph (f) of this section to show that an SSA employee provided misinformation, and requests a deemed filing date based on the misinformation provided to her earlier.

(b) *Deemed filing date of an application based on misinformation.* Subject to the requirements and conditions in paragraphs (c) through (g) of this section, we may establish a deemed filing date of an application for monthly benefits under the following provisions.

(1)(i) If we determine that you failed to apply for monthly benefits for yourself because we gave you misinformation about your eligibility for such benefits, we will deem an application for such benefits to have been filed with us on the later of—

(A) The date on which the misinformation was provided to you; or

(B) The date on which you met all of the requirements for entitlement to such benefits, other than the requirement of filing an application.

(ii) Before we may establish a deemed filing date of an application for benefits for you under paragraph (b)(1)(i) of this section, you or a person described in § 404.612 must file an application for such benefits. If you die before an application for the benefits is filed with us, we will consider establishing a deemed filing date of an application for such benefits only if an application for the benefits is filed with us by a person who would be qualified to receive any benefits due you.

(2)(i) If you had authority under § 404.612 to sign an application for benefits for another person, and we determine that you failed to apply for monthly benefits for that person because we gave you misinformation about that person's eligibility for such benefits, we will deem an application for such benefits to have been filed with us on the later of—

(A) The date on which the misinformation was provided to you; or

(B) The date on which the person met all of the requirements for entitlement to such benefits, other than the requirement of filing an application.

(ii) Before we may establish a deemed filing date of an application for benefits for the person under paragraph (b)(2)(i) of this section, you, such person, or another person described in § 404.612 must file an application for such benefits. If the person referred to in paragraph (b)(2)(i) of this section dies before an application for the benefits is filed with us, we will consider establishing a deemed filing date of an application for such benefits only if an application for the benefits is filed with us by a person who would be qualified to receive any benefits due the deceased person.

(c) *Requirements concerning the misinformation.* We apply the following requirements for purposes of paragraph (b) of this section.

(1) The misinformation must have been provided to you by one of our employees while he or she was acting in his or her official capacity as our employee. For purposes of this section, an employee includes an officer of SSA.

(2) Misinformation is information which we consider to be incorrect, misleading, or incomplete in view of the facts which you gave to the employee, or of which the employee was aware or should have been aware, regarding your particular circumstances, or the particular circumstances of the person referred to in paragraph (b)(2)(i) of this section. In addition, for us to find that the information you received was incomplete, the employee must have failed to provide you with the appropriate, additional information which he or she would be required to provide in carrying out his or her official duties.

(3) The misinformation may have been provided to you orally or in writing.

(4) The misinformation must have been provided to you in response to a specific request by you to us for information about your eligibility for benefits or the eligibility for benefits of the person referred to in paragraph (b)(2)(i) of this section for which you were considering filing an application.

(d) *Evidence that misinformation was provided.* We will consider the following evidence in making a determination under paragraph (b) of this section.

(1) *Preferred evidence.* Preferred evidence is written evidence which relates directly to your inquiry about your eligibility for benefits or the eligibility of

another person and which shows that we gave you misinformation which caused you not to file an application. Preferred evidence includes, but is not limited to, the following—

(i) A notice, letter or other document which was issued by us and addressed to you; or

(ii) Our record of your telephone call, letter or in-person contact.

(2) *Other evidence.* In the absence of preferred evidence, we will consider other evidence, including your statements about the alleged misinformation, to determine whether we gave you misinformation which caused you not to file an application. We will not find that we gave you misinformation, however, based solely on your statements. Other evidence which you provide or which we obtain must support your statements. Evidence which we will consider includes, but is not limited to, the following—

(i) Your statements about the alleged misinformation, including statements about—

(A) The date and time of the alleged contact(s);

(B) How the contact was made, e.g., by telephone or in person;

(C) The reason(s) the contact was made;

(D) Who gave the misinformation; and

(E) The questions you asked and the facts you gave us, and the questions we asked and the information we gave you, at the time of the contact;

(ii) Statements from others who were present when you were given the alleged misinformation, e.g., a neighbor who accompanied you to our office;

(iii) If you can identify the employee or the employee can recall your inquiry about benefits—

(A) Statements from the employee concerning the alleged contact, including statements about the questions you asked, the facts you gave, the questions the employee asked, and the information provided to you at the time of the alleged contact; and

(B) Our assessment of the likelihood that the employee provided the alleged misinformation;

(iv) An evaluation of the credibility and the validity of your allegations in conjunction with other relevant information; and

(v) Any other information regarding your alleged contact.

(e) *Information which does not constitute satisfactory proof that misinformation was given.* Certain kinds of information will not be considered satisfactory proof that we gave you misinformation which caused you not to file an application. Examples of such information include—

(1) General informational pamphlets that we issue to provide basic program information;

(2) The Personal Earnings and Benefit Estimate Statement that is based on an individual's reported and projected earnings and is an estimate which can be requested at any time;

(3) General information which we review or prepare but which is disseminated by the media, e.g., radio, television, magazines, and newspapers; and

(4) Information provided by other governmental agencies, e.g., the Department of Veterans Affairs, the Department of Defense, State unemployment agencies, and State and local governments.

(f) *Claim for benefits based on misinformation.* You may make a claim for benefits based on misinformation at any time. Your claim must contain information that will enable us to determine if we did provide misinformation to you about your eligibility for benefits, or the eligibility of a person on whose behalf you were considering applying for benefits, which caused you not to file an application for the benefits. Specifically, your claim must be in writing and it must explain what information was provided; how, when and where it was provided and by whom; and why the information caused you not to file an application. If you give us this information, we will make a determination on such a claim for benefits if all of the following conditions are also met.

(1) An application for the benefits described in paragraph (b)(1)(i) or (b)(2)(i) of this section is filed with us by someone described in paragraph (b)(1)(ii) or (b)(2)(ii) of this section, as appropriate. The application must be filed after the alleged misinformation was provided. This application may be—

(i) An application on which we have made a previous final determination or decision awarding the benefits, but only if the claimant continues to be entitled to benefits based on that application;

(ii) An application on which we have made a previous final determination or decision denying the benefits, but only if such determination or decision is reopened under § 404.988; or

(iii) A new application on which we have not made a final determination or decision.

(2) The establishment of a deemed filing date of an application for benefits based on misinformation could result in the claimant becoming entitled to benefits or to additional benefits.

(3) We have not made a previous final determination or decision to which you were a party on a claim for benefits based on alleged misinformation involving the same facts and issues. This provision does not apply, however, if the final determination or decision may be reopened under § 404.988.

(g) *Effective date.* This section applies only to misinformation which we provided after December 1982. In addition, this section is effective only for benefits payable for months after December 1982.

[59 FR 44924, Aug. 31, 1994]

WITHDRAWAL OF APPLICATION

§ 404.640 Withdrawal of an application.

(a) *Request for withdrawal filed before a determination is made.* An application may be withdrawn before we make a determination on it if—

(1) A written request for withdrawal is filed at a place described in § 404.614 by the claimant or a person who may sign an application for the claimant under § 404.612; and

(2) The claimant is alive at the time the request is filed.

(b) *Request for withdrawal filed after a determination is made.* An application may be withdrawn after we make a determination on it if—

(1) The conditions in paragraph (a) of this section are met;

(2) Any other person whose entitlement would be rendered erroneous because of the withdrawal consents in writing to it. Written consent for the person may be given by someone who could sign an application for him or her under § 404.612; and

(3) All benefits already paid based on the application being withdrawn are repaid or we are satisfied that they will be repaid.

(4) *Old age benefits.* An old age benefit application may be withdrawn if, in addition to the requirements of this section—

(i) The request for withdrawal is filed within 12 months of the first month of entitlement; and

(ii) The claimant has not previously withdrawn an application for old age benefits.

(c) *Request for withdrawal filed after the claimant's death.* An application may be withdrawn after the claimant's death, regardless of whether we have made a determination on it, if—

(1) The claimant's application was for old-age benefits that would be reduced because of his or her age;

(2) The claimant died before we certified his or her benefit entitlement to the Treasury Department for payment;

(3) A written request for withdrawal is filed at a place described in § 404.614 by or for the person eligible for widow's or widower's benefits based on the claimant's earnings; and

(4) The conditions in paragraphs (b)(2) and (3) of this section are met.

(d) *Effect of withdrawal.* If we approve a request to withdraw an application, the application will be considered as though it was never filed. If we disapprove a request for withdrawal, the application is treated as though the request was never filed.

[44 FR 37209, June 26, 1979, as amended at 48 FR 21931, May 16, 1983; 51 FR 37720, Oct. 24, 1986; 75 FR 76259, Dec. 8, 2010]

§ 404.641 Cancellation of a request to withdraw.

A request to withdraw an application may be cancelled and the application reinstated if—

(a) A written request for cancellation is filed at a place described in § 404.614 by the claimant or someone who may sign an application for the claimant under § 404.612;

(b) The claimant is alive at the time the request for cancellation is filed; and

(c) For a cancellation request received after we have approved the withdrawal, the request is filed no later than 60 days after the date of the notice of approval.

Subpart H—Evidence

AUTHORITY: Secs. 205(a) and 702(a)(5) of the Social Security Act (42 U.S.C. 405(a) and 902(a)(5)).

SOURCE: 43 FR 24795, June 7, 1978, unless otherwise noted.

GENERAL

§ 404.701 Introduction.

This subpart contains the Social Security Administration's basic rules about what evidence is needed when a person claims old-age, disability, dependents' and survivors' insurance benefits as described in subpart D. In addition, there are special evidence requirements for disability benefits. These are contained in subpart P. Evidence of a person's earnings under social security is described in subpart I. Evidence needed to obtain a social security number card is described in part 422. Evidence requirements for the supplemental security income program are contained in part 416.

§ 404.702 Definitions.

As used in this subpart:

Apply means to sign a form or statement that the Social Security Administration accepts as an application for benefits under the rules set out in subpart G.

Benefits means any old-age, disability, dependents' and survivors' insurance benefits described in subpart D, including a period of disability.

Convincing evidence means one or more pieces of evidence that prove you meet a requirement for eligibility. See § 404.708 for the guides we use in deciding whether evidence is convincing.

Eligible means that a person would meet all the requirements for entitlement to benefits for a period of time but has not yet applied.

Entitled means that a person has applied and has proven his or her right to benefits for a period of time.

Evidence means any record, document, or signed statement that helps to show whether you are eligible for benefits or whether you are still entitled to benefits.

Insured person means someone who has enough earnings under social security to permit the payment of benefits on his or her earnings record. He or she is *fully insured*, *transitionally insured*, *currently insured*, or *insured for disability* as defined in subpart B.

We or *Us* refers to the Social Security Administration.

You refers to the person who has applied for benefits, or the person for whom someone else has applied.

§ 404.703 When evidence is needed.

When you apply for benefits, we will ask for evidence that you are eligible for them. After you become entitled to benefits, we may ask for evidence showing whether you continue to be entitled to benefits; or evidence showing whether your benefit payments should be reduced or stopped. See § 404.401 for a list showing when benefit payments must be reduced or stopped.

§ 404.704 Your responsibility for giving evidence.

When evidence is needed to prove your eligibility or your right to continue to receive benefit payments, you will be responsible for obtaining and giving the evidence to us. We will be glad to advise you what is needed and how to get it and we will consider any evidence you give us. If your evidence is a foreign-language record or document, we can have it translated for you. Evidence given to us will be kept confidential and not disclosed to anyone but you except under the rules set out in part 401. You should also be aware that Section 208 of the Social Security Act provides criminal penalties for misrepresenting the facts or for making false statements to obtain social security benefits for yourself or someone else.

§ 404.705 Failure to give requested evidence.

Generally, you will be asked to give us by a certain date specific kinds of evidence or information to prove you are eligible for benefits. If we do not receive the evidence or information by that date, we may decide you are not

eligible for benefits. If you are already receiving benefits, you may be asked to give us by a certain date information needed to decide whether you continue to be entitled to benefits or whether your benefits should be stopped or reduced. If you do not give us the requested information by the date given, we may decide that you are no longer entitled to benefits or that your benefits should be stopped or reduced. You should let us know if you are unable to give us the requested evidence within the specified time and explain why there will be a delay. If this delay is due to illness, failure to receive timely evidence you have asked for from another source, or a similar circumstance, you will be given additional time to give us the evidence.

§ 404.706 Where to give evidence.

Evidence should be given to the people at a Social Security Administration office. In the Philippines evidence should be given to the people at the Veterans Administration Regional Office. Elsewhere outside the United States, evidence should be given to the people at a United States Foreign Service Office.

§ 404.707 Original records or copies as evidence.

(a) *General*. To prove your eligibility or continuing entitlement to benefits, you may be asked to show us an original document or record. These original records or documents will be returned to you after we have photocopied them. We will also accept copies of original records that are properly certified and some uncertified birth notifications. These types of records are described below in this section.

(b) *Certified copies of original records*. You may give us copies of original records or extracts from records if they are certified as true and exact copies by—

(1) The official custodian of the record;

(2) A Social Security Administration employee authorized to certify copies;

(3) A Veterans Administration employee if the evidence was given to that agency to obtain veteran's benefits;

(4) A U.S. Consular Officer or employee of the Department of State authorized to certify evidence received outside the United States; or

(5) An employee of a State Agency or State Welfare Office authorized to certify copies of original records in the agency's or office's files.

(c) *Uncertified copies of original records*. You may give us an uncertified photocopy of a birth registration notification as evidence where it is the practice of the local birth registrar to issue them in this way.

§ 404.708 How we decide what is enough evidence.

When you give us evidence, we examine it to see if it is convincing evidence. If it is, no other evidence is needed. In deciding if evidence is convincing, we consider whether—

(a) Information contained in the evidence was given by a person in a position to know the facts;

(b) There was any reason to give false information when the evidence was created;

(c) Information contained in the evidence was given under oath, or with witnesses present, or with the knowledge there was a penalty for giving false information;

(d) The evidence was created at the time the event took place or shortly thereafter;

(e) The evidence has been altered or has any erasures on it; and

(f) Information contained in the evidence agrees with other available evidence, including our records.

§ 404.709 Preferred evidence and other evidence.

If you give us the type of evidence we have shown as *preferred* in the following sections of this subpart, we will generally find it is convincing evidence. This means that unless we have information in our records that raises a doubt about the evidence, other evidence of the same fact will not be needed. If preferred evidence is not available, we will consider any other evidence you give us. If this other evidence is several different records or documents which all show the same information, we may decide it is convincing evidence even though it is not *preferred* evidence. If the other evidence is not convincing by itself, we will ask

for additional evidence. If this additional evidence shows the same information, all the evidence considered together may be convincing. When we have convincing evidence of the facts that must be proven or it is clear that the evidence provided does not prove the necessary facts, we will make a formal decision about your benefit rights.

EVIDENCE OF AGE, MARRIAGE, AND DEATH

§ 404.715 When evidence of age is needed.

(a) If you apply for benefits, we will ask for evidence of age which shows your date of birth unless you are applying for—

(1) A lump-sum death payment;

(2) A wife's benefit and you have the insured person's child in your care;

(3) A mother's or father's benefit; or

(4) A disability benefit (or for a period of disability) and neither your eligibility nor benefit amount depends upon your age.

(b) If you apply for wife's benefits while under age 62 or if you apply for a mother's or father's benefit, you will be asked for evidence of the date of birth of the insured person's children in your care.

(c) If you apply for benefits on the earnings record of a deceased person, you may be asked for evidence of his or her age if this is needed to decide whether he or she was insured at the time of death or what benefit amount is payable to you.

§ 404.716 Type of evidence of age to be given.

(a) *Preferred evidence.* The best evidence of your age, if you can obtain it, is either: a birth certificate or hospital birth record recorded before age 5; or a religious record which shows your date of birth and was recorded before age 5.

(b) *Other evidence of age.* If you cannot obtain the preferred evidence of your age, you will be asked for other convincing evidence that shows your date of birth or age at a certain time such as: an original family bible or family record; school records; census records; a statement signed by the physician or midwife who was present at your birth; insurance policies; a marriage record; a passport; an employment record; a delayed birth certificate, your child's birth certificate; or an immigration or naturalization record.

§ 404.720 Evidence of a person's death.

(a) *When evidence of death is required.* If you apply for benefits on the record of a deceased person, we will ask for evidence of the date and place of his or her death. We may also ask for evidence of another person's death if this is needed to prove you are eligible for benefits.

(b) *Preferred evidence of death.* The best evidence of a person's death is—

(1) A certified copy or extract from the public record of death, coroner's report of death, or verdict of a coroner's jury; or a certificate by the custodian of the public record of death;

(2) A statement of the funeral director, attending physician, intern of the institution where death occurred;

(3) A certified copy of, or extract from an official report or finding of death made by an agency or department of the United States; or

(4) If death occurred outside the United States, an official report of death by a United States Consul or other employee of the State Department; or a copy of the public record of death in the foreign country.

(c) *Other evidence of death.* If you cannot obtain the preferred evidence of a person's death, you will be asked to explain why and to give us other convincing evidence such as: the signed statements of two or more people with personal knowledge of the death, giving the place, date, and cause of death.

§ 404.721 Evidence to presume a person is dead.

If you cannot prove the person is dead but evidence of death is needed, we will presume he or she died at a certain time if you give us the following evidence:

(a) A certified copy of, or extract from, an official report or finding by an agency or department of the United States that a missing person is *presumed to be* dead as set out in Federal law (5 U.S.C. 5565). Unless we have other evidence showing an actual date of death, we will use the date he or she

was reported missing as the date of death.

(b) Signed statements by those in a position to know and other records which show that the person has been absent from his or her residence and has not been heard from for at least 7 years. If the presumption of death is not rebutted pursuant to § 404.722, we will use as the person's date of death either the date he or she left home, the date ending the 7 year period, or some other date depending upon what the evidence shows is the most likely date of death.

(c) If you are applying for benefits as the insured person's grandchild or stepgrandchild but the evidence does not identify a parent, we will presume the parent died in the first month in which the insured person became entitled to benefits.

[43 FR 24795, June 7, 1978, as amended at 60 FR 19164, Apr. 17, 1995]

§ 404.722 Rebuttal of a presumption of death.

A presumption of death made based on § 404.721(b) can be rebutted by evidence that establishes that the person is still alive or explains the individual's absence in a manner consistent with continued life rather than death.

Example 1: Evidence in a claim for surviving child's benefits showed that the worker had wages posted to his earnings record in the year following the disappearance. It was established that the wages belonged to the worker and were for work done after his ''disappearance.'' In this situation, the presumption of death is rebutted by evidence (wages belonging to the worker) that the person is still alive after the disappearance.

Example 2: Evidence shows that the worker left the family home shortly after a woman, whom he had been seeing, also disappeared, and that the worker phoned his wife several days after the disappearance to state he intended to begin a new life in California. In this situation the presumption of death is rebutted because the evidence explains the worker's absence in a manner consistent with continued life.

[60 FR 19165, Apr. 17, 1995]

§ 404.723 When evidence of marriage is required.

If you apply for benefits as the insured person's husband or wife, widow or widower, divorced wife or divorced husband, we will ask for evidence of the marriage and where and when it took place. We may also ask for this evidence if you apply for child's benefits or for the lump-sum death payment as the widow or widower. If you are a widow, widower, or divorced wife who remarried after your marriage to the insured person ended, we may also ask for evidence of the remarriage. You may be asked for evidence of someone else's marriage if this is necessary to prove your marriage to the insured person was valid. In deciding whether the marriage to the insured person is valid or not, we will follow the law of the State where the insured person had his or her permanent home when you applied or, if earlier, when he or she died—see § 404.770. What evidence we will ask for depends upon whether the insured person's marriage was a ceremonial marriage, a common-law marriage, or a marriage we will deem to be valid.

[43 FR 24795, June 7, 1978, as amended at 44 FR 34493, June 15, 1979]

§ 404.725 Evidence of a valid ceremonial marriage.

(a) *General.* A valid *ceremonial marriage* is one that follows procedures set by law in the State or foreign country where it takes place. These procedures cover who may perform the marriage ceremony, what licenses or witnesses are needed, and similar rules. A ceremonial marriage can be one that follows certain tribal Indian custom, Chinese custom, or similar traditional procedures. We will ask for the evidence described in this section.

(b) *Preferred evidence.* Preferred evidence of a ceremonial marriage is—

(1) If you are applying for wife's or husband's benefits, signed statements from you and the insured about when and where the marriage took place. If you are applying for the lump-sum death payment as the widow or widower, your signed statement about when and where the marriage took place; or

(2) If you are applying for any other benefits or there is evidence causing some doubt about whether there was a ceremonial marriage: a copy of the public record of marriage or a certified statement as to the marriage; a copy of

the religious record of marriage or a certified statement as to what the record shows; or the original marriage certificate.

(c) *Other evidence of a ceremonial marriage.* If preferred evidence of a ceremonial marriage cannot be obtained, we will ask you to explain why and to give us a signed statement of the clergyman or official who held the marriage ceremony, or other convincing evidence of the marriage.

§ 404.726 Evidence of common-law marriage.

(a) *General.* A *common-law marriage* is one considered valid under certain State laws even though there was no formal ceremony. It is a marriage between two persons free to marry, who consider themselves married, live together as man and wife, and, in some States, meet certain other requirements. We will ask for the evidence described in this section.

(b) *Preferred evidence.* Preferred evidence of a common-law marriage is—

(1) If both the husband and wife are alive, their signed statements and those of two blood relatives;

(2) If either the husband or wife is dead, the signed statements of the one who is alive and those of two blood relatives of the deceased person; or

(3) If both the husband and wife are dead, the signed statements of one blood relative of each;

NOTE: All signed statements should show why the signer believes there was a marriage between the two persons. If a written statement cannot be gotten from a blood relative, one from another person can be used instead.

(c) *Other evidence of common-law marriage.* If you cannot get preferred evidence of a common-law marriage, we will ask you to explain why and to give us other convincing evidence of the marriage. We may not ask you for statements from a blood relative or other person if we believe other evidence presented to us proves the common-law marriage.

§ 404.727 Evidence of a deemed valid marriage.

(a) *General.* A *deemed valid marriage* is a ceremonial marriage we consider valid even though the correct procedures set by State law were not strictly followed or a former marriage had not yet ended. We will ask for the evidence described in this section.

(b) *Preferred evidence.* Preferred evidence of a deemed valid marriage is—

(1) Evidence of the ceremonial marriage as described in § 404.725(b)(2);

(2) If the insured person is alive, his or her signed statement that the other party to the marriage went through the ceremony in good faith and his or her reasons for believing the marriage was valid or believing the other party thought it was valid;

(3) The other party's signed statement that he or she went through the marriage ceremony in good faith and his or her reasons for believing it was valid;

(4) If needed to remove a reasonable doubt, the signed statements of others who might have information about what the other party knew about any previous marriage or other facts showing whether he or she went through the marriage in good faith; and

(5) Evidence the parties to the marriage were living in the same household when you applied for benefits or, if earlier, when the insured person died (see § 404.760).

(c) *Other evidence of a deemed valid marriage.* If you cannot obtain preferred evidence of a deemed valid marriage, we will ask you to explain why and to give us other convincing evidence of the marriage.

§ 404.728 Evidence a marriage has ended.

(a) *When evidence is needed that a marriage has ended.* If you apply for benefits as the insured person's divorced wife or divorced husband, you will be asked for evidence of your divorce. If you are the insured person's widow or divorced wife who had remarried but that husband died, we will ask you for evidence of his death. We may ask for evidence that a previous marriage you or the insured person had was ended before you married each other if this is needed to show the latter marriage was valid. If you apply for benefits as an unmarried person and you had a marriage which was annulled, we will ask for evidence of the annulment. We will ask for the evidence described in this section.

(b) *Preferred evidence*. Preferred evidence a marriage has ended is—

(1) A certified copy of the decree of divorce or annulment; or

(2) Evidence the person you married has died (see § 404.720).

(c) *Other evidence a marriage has ended*. If you cannot obtain preferred evidence the marriage has ended, we will ask you to explain why and to give us other convincing evidence the marriage has ended.

[43 FR 24795, June 7, 1978, as amended at 44 FR 34493, June 15, 1979]

EVIDENCE FOR CHILD'S AND PARENT'S BENEFITS

§ 404.730 When evidence of a parent or child relationship is needed.

If you apply for parent's or child's benefits, we will ask for evidence showing your relationship to the insured person. What evidence we will ask for depends on whether you are the insured person's natural parent or child; or whether you are the stepparent, stepchild, grandchild, stepgrandchild, adopting parent or adopted child.

§ 404.731 Evidence you are a natural parent or child.

If you are the natural parent of the insured person, we will ask for a copy of his or her public or religious birth record made before age 5. If you are the natural child of the insured person, we will ask for a copy of your public or religious birth record made before age 5. In either case, if this record shows the same last name for the insured and the parent or child, we will accept it as convincing evidence of the relationship. However, if other evidence raises some doubt about this record or if the record cannot be gotten, we will ask for other evidence of the relationship. We may also ask for evidence of marriage of the insured person or of his or her parent if this is needed to remove any reasonable doubt about the relationship. To show you are the child of the insured person, you may be asked for evidence you would be able to inherit his or her personal property under State law where he or she had a permanent home (see § 404.770). In addition, we may ask for the insured persons signed statement that you are his or her natural child, or for a copy of any court order showing the insured has been declared to be your natural parent or any court order requiring the insured to contribute to you support because you are his or her son or daughter.

§ 404.732 Evidence you are a stepparent or stepchild.

If you are the stepparent or stepchild of the insured person, we will ask for the evidence described in § 404.731 or § 404.733 that which shows your natural or adoptive relationship to the insured person's husband, wife, widow, or widower. We will also ask for evidence of the husband's, wife's, widow's, or widower's marriage to the insured person—see § 404.725.

§ 404.733 Evidence you are the legally adopting parent or legally adopted child.

If you are the adopting parent or adopted child, we will ask for the following evidence:

(a) A copy of the birth certificate made following the adoption; or if this cannot be gotten, other evidence of the adoption; and, if needed, evidence of the date of adoption;

(b) If the widow or widower adopted the child after the insured person died, the evidence described in paragraph (a) of this section; your written statement whether the insured person was living in the same household with the child when he or she died (see § 404.760); what support the child was getting from any other person or organization; and if the widow or widower had a deemed valid marriage with the insured person, evidence of that marriage—see § 404.727;

(c) If you are the insured's stepchild, grandchild, or stepgrandchild as well as his or her adopted child, we may also ask you for evidence to show how you were related to the insured before the adoption.

§ 404.734 Evidence you are an equitably adopted child.

In many States, the law will treat someone as a child of another if he or she agreed to adopt the child, the natural parents or the person caring for the child were parties to the agreement, he or she and the child then

lived together as parent and child, and certain other requirements are met. If you are a child who had this kind or relationship to the insured person (or to the insured persons's wife, widow, or husband), we will ask for evidence of the agreement if it is in writing. If it is not in writing or cannot be gotten, other evidence may be accepted. Also, the following evidence will be asked for: Written statements of your natural parents and the adopting parents and other evidence of the child's relationship to the adopting parents.

§ 404.735 Evidence you are the grandchild or stepgrandchild.

If you are the grandchild or stepgrandchild of the insured person, we will ask you for the kind of evidence described in §§ 404.731 through 404.733 that shows your relationship to your parent and your parent's relationship to the insured.

§ 404.736 Evidence of a child's dependency.

(a) *When evidence of a child's dependency is needed.* If you apply for child's benefit's we may ask for evidence you were the insured person's dependent at a specific time—usually the time you applied or the time the insured died or became disabled. What evidence we ask for depends upon how you are related to the insured person.

(b) *Natural or adopted child.* If you are the insured person's natural or adopted child, we may ask for the following evidence:

(1) A signed statement by someone who knows the facts that confirms this relationship and which shows whether you were legally adopted by someone other than the insured. If you were adopted by someone else while the insured person was alive, but the adoption was annulled, we may ask for a certified copy of the annulment decree or other convincing evidence of the annulment.

(2) A signed statement by someone in a position to know showing when and where you lived with the insured and when and why you may have lived apart; and showing what contributions the insured made to your support and when and how they were made.

(c) *Stepchild.* If you are the insured person's stepchild, we will ask for the following evidence:

(1) A signed statement by someone in a position to know—showing when and where you lived with the insured and when and why you may have lived apart.

(2) A signed statement by someone in a position to know showing you received at least one-half of your support from the insured for the one-year period ending at one of the times mentioned in paragraph (a) of this section; and the income end support you had in this period from any other source.

(d) *Grandchild or Stepgrandchild.* If you are the insured person's grandchild or stepgrandchild, we will ask for evidence described in paragraph (c) of this section showing that you were living together with the insured and receiving one-half of your support from him or her for the year before the insured became entitled to benefits or to a period of disability, or died. We will also ask for evidence of your parent's death or disability.

§ 404.745 Evidence of school attendance for child age 18 or older.

If you apply for child's benefits as a student age 18 or over, we may ask for evidence you are attending school. We may also ask for evidence from the school you attend showing your status at the school. We will ask for the following evidence:

(a) Your signed statement that you are attending school full-time and are not being paid by an employer to attend school.

(b) If you apply before the school year has started and the school is not a high school, a letter of acceptance from the school, receipted bill, or other evidence showing you have enrolled or been accepted at that school.

§ 404.750 Evidence of a parent's support.

If you apply for parent's benefits, we will ask you for evidence to show that you received at least one-half of your support from the insured person in the one-year period before he or she died or became disabled. We may also ask others who know the facts for a signed

statement about your sources of support. We will ask you for the following evidence:

(a) The parent's signed statement showing his or her income, any other sources of support, and the amount from each source over the one-year period.

(b) If the statement described in paragraph (a) of this section cannot be obtained, other convincing evidence that the parent received one-half of his or her support from the insured person.

OTHER EVIDENCE REQUIREMENTS

§ 404.760 Evidence of living in the same household with insured person.

If you apply for the lump-sum death payment as the insured person's widow or widower, or for wife's, husband's, widow's, or widower's benefits based upon a deemed valid marriage as described in § 404.727, we will ask for evidence you and the insured were living together in the same household when he or she died; or if the insured is alive, when you applied for benefits. We will ask for the following as evidence of this:

(a) If the insured person is living, his or her signed statement and yours showing whether you were living together when you applied for benefits.

(b) If the insured person is dead, your signed statement showing whether you were living together when he or she died.

(c) If you and the insured person were temporarily living apart, a signed statement explaining where each was living, how long the separation lasted, and why you were separated. If needed to remove any reasonable doubts about this, we may ask for the signed statements of others in a position to know, or for other convincing evidence you and the insured were living together in the same household.

§ 404.762 What is acceptable evidence of having a child in my care?

What evidence we will ask for depends upon whether the child is living with you or with someone else. You will be asked to give the following evidence:

(a) If the child is living with you, your signed statement showing that the child is living with you.

(b) If the child is living with someone else—

(1) Your signed statement showing with whom he or she is living and why he or she is living with someone else. We will also ask when he or she last lived with you and how long this separation will last, and what care and contributions you provide for the child;

(2) The signed statement of the one with whom the child is living showing what care you provide and the sources and amounts of support received for the child. If the child is in an institution, an official there should sign the statement. These statements are preferred evidence. If there is a court order or written agreement showing who has custody of the child, you may be asked to give us a copy; and

(3) If you cannot get the preferred evidence described in paragraph (b)(2) of this section, we will ask for other convincing evidence that the child is in your care.

[43 FR 24795, June 7, 1978, as amended at 73 FR 40967, July 17, 2008]

§ 404.770 Evidence of where the insured person had a permanent home.

(a) *When evidence of the insured's permanent home is needed.* We may ask for evidence of where the insured person's permanent home was at the time you applied or, if earlier, the time he or she died if—

(1) You apply for benefits as the insured's wife, husband, widow, widower, parent or child; and

(2) Your relationship to the insured depends upon the State law that would be followed in the place where the insured had his or her permanent home when you applied for benefits or when he or she died.

(b) *What evidence is needed.* We will ask for the following evidence of the insured person's permanent home:

(1) Your signed statement showing where the insured considered his permanent home to be.

(2) If the statement in paragraph (b)(1) of this section or other evidence we have raises a reasonable doubt about where the insured's permanent

home was, evidence of where he or she paid personal, property, or income taxes, or voted; or other convincing evidence of where his or her permanent home was.

§ 404.780 Evidence of "good cause" for exceeding time limits on accepting proof of support or application for a lump-sum death payment.

(a) *When evidence of good cause* is needed. We may ask for evidence that you had *good cause* (as defined in § 404.370(f)) for not giving us sooner proof of the support you received from the insured as his or her parent. We may also ask for evidence that you had *good cause* (as defined in § 404.621(b)) for not applying sooner for the lump-sum death payment. You may be asked for evidence of *good cause* for these delays if—

(1) You are the insured person's parent giving us proof of support more than 2 years after he or she died, or became disabled; or

(2) You are applying for the lump-sum death payment more than 2 years after the insured died.

(b) *What evidence of good cause* is needed. We will ask for the following evidence of good cause:

(1) Your signed statement explaining why you did not give us the proof of support or the application for lump-sum death payment within the specified 2 year period.

(2) If the statement in paragraph (b)(1) of the section or other evidence raises a reasonable doubt whether there was good cause, other convincing evidence of this.

[43 FR 24795, June 7, 1978, as amended at 44 FR 34493, June 15, 1979]

Subpart I—Records of Earnings

AUTHORITY: Secs. 205(a), (c)(1), (c)(2)(A), (c)(4), (c)(5), (c)(6), and (p), 702(a)(5), and 1143 of the Social Security Act (42 U.S.C. 405(a), (c)(1), (c)(2)(A), (c)(4), (c)(5), (c)(6), and (p), 902(a)(5), and 1320b–13).

SOURCE: 44 FR 38454, July 2, 1979, unless otherwise noted.

GENERAL PROVISIONS

§ 404.801 Introduction.

The Social Security Administration (SSA) keeps a record of the earnings of all persons who work in employment or self-employment covered under social security. We use these earnings records to determine entitlement to and the amount of benefits that may be payable based on a person's earnings under the retirement, survivors', disability and health insurance program. This subpart tells what is evidence of earnings, how you can find out what the record of your earnings shows, and how and under what circumstances the record of your earnings may be changed to correct errors.

§ 404.802 Definitions.

For the purpose of this subpart—

Earnings means wages and self-employment income earned by a person based on work covered by social security. (See subpart K for the rules about what constitutes wages and self-employment income for benefit purposes.)

Period means a taxable year when referring to self-employment income. When referring to wages it means a calendar quarter if the wages were reported or should have been reported quarterly by your employer or a calendar year if the wages were reported or should have been reported annually by your employer.

Record of earnings, earnings record, or *record* means SSA's records of the amounts of wages paid to you and the amounts of self-employment income you received, the periods in which the wages were paid and the self-employment income was received, and the quarters of coverage which you earned based on these earnings.

Survivor means your spouse, divorced wife, child, or parent, who survives you. *Survivor* also includes your surviving divorced wife who may be entitled to benefits as a surviving divorced mother.

Tax return means, as appropriate, a tax return of wages or a tax return of self-employment income (including information returns and other written

statements filed with the Commissioner of Internal Revenue under chapter 2 or 21 of the Internal Revenue Code of 1954, as amended).

Time limit means a period of time 3 years, 3 months, and 15 days after any year in which you received earnings. The period may be extended by the Soldiers and Sailors Relief Act of 1940 because of your military service or the military service of certain relatives who survive you (50 U.S.C. App. 501 and following sections). Where the time limit ends on a Federal nonwork day, we will extend it to the next Federal work day.

Wage report means a statement filed by a State under section 218 of the Social Security Act or related regulations. This statement includes wage amounts for which a State is billed and wage amounts for which credits or refunds are made to a State according to an agreement under section 218 of the Act.

We, *us*, or *our* means the Social Security Administration (SSA).

Year means a calendar year when referring to wages and a taxable year when referring to self-employment income.

You or *your* means any person for whom we maintain a record of earnings.

§ 404.803 Conclusiveness of the record of your earnings.

(a) *Generally*. For social security purposes, SSA records are evidence of the amounts of your earnings and the periods in which they were received.

(b) *Before time limit ends*. Before the time limit ends for a year, SSA records are evidence, but not conclusive evidence, of the amounts and periods of your earnings in that year.

(c) *After time limit ends*. After the time limit ends for a year—

(1) If SSA records show an entry of self-employment income or wages for an employer for a period in that year, our records are conclusive evidence of your self-employment income in that year or the wages paid to you by that employer and the periods in which they were received unless one of the exceptions in § 404.822 applies;

(2) If SSA records show no entry of wages for an employer for a period in that year, our records are conclusive evidence that no wages were paid to you by that employer in that period unless one of the exceptions in § 404.822 applies; and

(3) If SSA records show no entry of self-employment income for that year, our records are conclusive evidence that you did not receive self-employment income in that year unless the exception in § 404.822(b)(2) (i) or (iii) applies.

OBTAINING EARNINGS INFORMATION

§ 404.810 How to obtain a statement of earnings and a benefit estimate statement.

(a) *Right to a statement of earnings and a benefit estimate*. You or your legal representative or, after your death, your survivor or the legal representative of your estate may obtain a statement of your earnings as shown on our records at the time of the request. If you have a social security number and have wages or net earnings from self-employment, you may also request and receive an earnings statement that will include an estimate of the monthly old-age, disability, dependents', and survivors' insurance benefits potentially payable on your earnings record, together with a description of the benefits payable under the medicare program. You may request these statements by writing, calling, or visiting a social security office.

(b) *Contents of request*. When you request a statement of your earnings, we will ask you to complete a prescribed form, giving us your name, social security number, date of birth, and sex. You, your authorized representative or, after your death, your survivor or the legal representative of your estate will be asked to sign and date the form. If you are requesting an estimate of the monthly benefits potentially payable on your earnings record, we will also ask you to give us the amount of your earnings for the last year, an estimate of your earnings for the current year, an estimate of your earnings for future years before your planned retirement, and the age at which you plan to retire, so that we can give you a more realistic estimate of the benefits that may be payable on your record. A request for a statement of earnings and a

benefit estimate not made on the prescribed form will be accepted if the request is in writing, is signed and dated by the appropriate individual noted above, and contains all the information that is requested on the prescribed form.

[57 FR 54918, Nov. 23, 1992]

§ 404.811 The statement of earnings and benefit estimates you requested.

(a) *General.* After receiving a request for a statement of earnings and the information we need to comply with the request, we will provide you or your authorized representative a statement of the earnings we have credited to your record at the time of your request. With the statement of earnings, we will include estimates of the benefits potentially payable on your record, unless you do not have the required credits (quarters of coverage) for any kind of benefit(s). (However, see paragraph (b)(3) of this section regarding the possibility of our estimating up to eight additional credits on your record.) If we do not provide a statement of earnings and an estimate of all the benefits potentially payable, or any other information you requested, we will explain why.

(b) *Contents of statement of earnings and benefit estimates.* The statement of your earnings and benefit estimates will contain the following information:

(1) Your social security taxed earnings as shown by our records as of the date of your request;

(2) An estimate of the social security and medicare hospital insurance taxes paid on your earnings (although we do not maintain such tax information);

(3) The number of credits, *i.e.*, quarters of coverage, not exceeding 40, you have for both social security and medicare hospital insurance purposes, and the number you need to be eligible for social security and also for medicare hospital insurance coverage. If you do not already have the required credits (quarters of coverage) to be eligible to receive social security benefits and medicare hospital insurance coverage, we may include up to eight additional estimated credits (four per year) based on the earnings you told us you had for last year and this year that we have not yet entered on your record;

(4) A statement as to whether you meet the credits (quarters of coverage) requirements, as described in subpart B of this part, for each type of social security benefit when we prepare the benefit estimates, and also whether you are eligible for medicare hospital insurance coverage;

(5) Estimates of the monthly retirement (old-age), disability, dependents' and survivors' insurance benefits potentially payable on your record if you meet the credits (quarters of coverage) requirements. The benefit estimates we send you will be based partly on your stated earnings for last year (if not yet on your record), your estimate of your earnings for the current year and for future years before you plan to retire, and on the age at which you plan to retire. The estimate will include the retirement (old-age) insurance benefits you could receive at age 62 (or your current age if you are already over age 62), at full retirement age (currently age 65 to 67, depending on your year of birth) or at your current age if you are already over full retirement age, and at age 70;

(6) A description of the coverage under the medicare program;

(7) A reminder of your right to request a correction of your earnings record; and

(8) A remark that an annually updated statement is available on request.

[61 FR 18076, Apr. 24, 1996]

§ 404.812 Statement of earnings and benefit estimates sent without request.

(a) *Who will be sent a statement.* Unless one of the conditions in paragraph (b) of this section applies to you, we will send you, without request, a statement of earnings and benefit estimates if:

(1) You have a social security account number;

(2) You have wages or net earnings from self-employment on your social security record;

(3) You have attained age 25 or older, as explained in paragraph (c)(3) of this section; and

(4) We can determine your current mailing address.

(b) *Who will not be sent a statement.* We will not send you an unrequested statement if any of the following conditions apply:

(1) You do not meet one or more of the conditions of paragraph (a) of this section;

(2) Our records contain a notation of your death;

(3) You are entitled to benefits under title II of the Act;

(4) We have already sent you a statement, based on your request, in the fiscal year we selected you to receive an unrequested statement;

(5) We cannot obtain your address (see paragraph (c)(2) of this section); or

(6) We are correcting your social security earnings record when we select you to receive a statement of earnings and benefit estimates.

(c) *The selection and mailing process.* Subject to the provisions of paragraphs (a) and (b) of this section, we will use the following process for sending statements without requests:

(1) *Selection.* We will use our records of assigned social security account numbers to identify individuals to whom we will send statements.

(2) *Addresses.* If you are living in one of the 50 States or the District of Columbia, our current procedure is to get your address from individual taxpayer files of the Internal Revenue Service, as authorized by section 6103(m)(7) of the Internal Revenue Code (26 U.S.C. 6103(m)(7)). If you live in Puerto Rico, the Virgin Islands, or Guam, we will get your address from the taxpayer records of the place in which you live.

(3) *Age.* If you have attained age 60 on or before September 30, 1995, we will send you a statement by that date. If you attain age 60 on or after October 1, 1995 but no later than September 30, 1999, we will send you a statement in the fiscal year in which you attain age 60, or in an earlier year as resources allow. Also, we will inform you that an annually updated statement is available on request. Beginning October 1, 1999, we will send you a statement each year in which you are age 25 or older.

(4) *Ineligible.* If we do not send you a statement because one or more conditions in paragraph (b) of this section apply when you are selected, we will send a statement in the first appropriate fiscal year thereafter in which you do qualify.

(5) *Undeliverable.* If the statement we send you is returned by the Post Office as undeliverable, we will not remail it.

(d) *Contents of statement of earnings and benefit estimates.* To prepare your statement and estimate your benefits, we will use the earnings in our records. If there are earnings recorded for you in either of the two years before the year in which you are selected to get a statement, we will use the later of these earnings as your earnings for the current year and future years when we estimate your benefits. In addition, if you do not already have the required credits (quarters of coverage) to be eligible to receive benefits, we will use that last recorded earnings amount to estimate up to eight additional credits (four per year) for last year and the current year if they are not yet entered on your record. If there are no earnings entered on your record in either of the two years preceding the year of selection, we will not estimate current and future earnings or additional credits for you. Your earnings and benefit estimates statement will contain the following information:

(1) Your social security taxed earnings as shown by our records as of the date we select you to receive a statement;

(2) An estimate of the social security and medicare hospital insurance taxes paid on your earnings (although we do not maintain such tax information);

(3) The number of credits, *i.e.*, quarters of coverage, not exceeding 40 (as described in paragraph (d) of this section), that you have for both social security and medicare hospital insurance purposes, and the number you need to be eligible for social security benefits and also for medicare hospital insurance coverage;

(4) A statement as to whether you meet the credit (quarters of coverage) requirements, as described in subpart B of this part, for each type of social security benefit when we prepare the benefit estimates, and also whether you are eligible for medicare hospital insurance coverage;

(5) Estimates of the monthly retirement (old-age), disability, dependents' and survivors' insurance benefits potentially payable on your record if you meet the credits (quarters of coverage) requirements. If you are age 50 or older, the estimates will include the retirement (old-age) insurance benefits you could receive at age 62 (or your current age if you are already over age 62), at full retirement age (currently age 65 to 67, depending on your year of birth) or at your current age if you are already over full retirement age, and at age 70. If you are under age 50, instead of estimates, we may provide a general description of the benefits (including auxiliary benefits) that are available upon retirement;

(6) A description of the coverage provided under the medicare program;

(7) A reminder of your right to request a correction of your earnings record; and

(8) A remark that an annually updated statement is available on request.

[61 FR 18077, Apr. 24, 1996]

CORRECTING THE EARNINGS RECORD

§ 404.820 Filing a request for correction of the record of your earnings.

(a) *When to file a request for correction.* You or your survivor must file a request for correction of the record of your earnings within the time limit for the year being questioned unless one of the exceptions in § 404.822 applies.

(b) *Contents of a request.* (1) A request for correction of an earnings record must be in writing and must state that the record is incorrect.

(2) A request must be signed by you or your survivor or by a person who may sign an application for benefits for you or for your survivor as described in § 404.612.

(3) A request should state the period being questioned.

(4) A request should describe, or have attached to it, any available evidence which shows that the record of earnings is incorrect.

(c) *Where to file a request.* A request may be filed with an SSA employee at one of our offices or with an SSA employee who is authorized to receive a request at a place other than one of our offices. A request may be filed with the Veterans Administration Regional Office in the Philippines or with any U.S. Foreign Service Office.

(d) *When a request is considered filed.* A request is considered filed on the day it is received by any of our offices, by an authorized SSA employee, by the Veterans Administration Regional Office in the Philippines, or by any U.S. Foreign Service Office. If using the date we receive a mailed request disadvantages the requester, we will use the date the request was mailed to us as shown by a U.S. postmark. If the postmark is unreadable or there is no postmark, we will consider other evidence of the date when the request was mailed.

(e) *Withdrawal of a request for correction.* A request for correction of SSA records of your earnings may be withdrawn as described in § 404.640.

(f) *Cancellation of a request to withdraw.* A request to withdraw a request for correction of SSA records of your earnings may be cancelled as described in § 404.641.

(g) *Determinations on requests.* When we receive a request described in this section, we will make a determination to grant or deny the request. If we deny the request, this determination may be appealed under the provisions of subpart J of this part.

§ 404.821 Correction of the record of your earnings before the time limit ends.

Before the time limit ends for any year, we will correct the record of your earnings for that year for any reason if satisfactory evidence shows SSA records are incorrect. We may correct the record as the result of a request filed under § 404.820 or we may correct it on our own.

§ 404.822 Correction of the record of your earnings after the time limit ends.

(a) *Generally.* After the time limit for any year ends, we may correct the record of your earnings for that year if satisfactory evidence shows SSA records are incorrect and any of the circumstances in paragraphs (b) through (e) of this section applies.

(b) *Correcting SSA records to agree with tax returns.* We will correct SSA records to agree with a tax return of wages or self-employment income to the extent that the amount of earnings shown in the return is correct.

(1) *Tax returns of wages.* We may correct the earnings record to agree with a tax return of wages or with a wage report of a State.

(2) *Tax returns of self-employment income*—(i) *Return filed before the time limit ended.* We may correct the earnings record to agree with a tax return of self-employment income filed before the end of the time limit.

(ii) *Return filed after time limit ended.* We may remove or reduce, but not increase, the amount of self-employment income entered on the earnings record to agree with a tax return of self-employment income filed after the time limit ends.

(iii) *Self-employment income entered in place of erroneously entered wages.* We may enter self-employment income for any year up to an amount erroneously entered in SSA records as wages but which was later removed from the records. However, we may enter self-employment income under this paragraph only if—

(A) An amended tax return is filed before the time limit ends for the year in which the erroneously entered wages were removed; or

(B) Net earnings from self-employment, which are not already entered in the record of your earnings, were included in a tax return filed before the end of the time limit for the year in which the erroneously entered wages were removed.

(c) *Written request for correction or application for benefits filed before the time limit ends*—(1) *Written request for correction.* We may correct an earnings record if you or your survivor files a request for correction before the time limit for that year ends. The request must state that the earnings record for that year is incorrect. However, we may not correct the record under this paragraph after our determination on the request becomes final.

(2) *Application for benefits.* We may correct an earnings record if an application is filed for monthly benefits or for a lump-sum death payment before the time limit for that year ends. However, we may not correct the record under this paragraph after our determination on the application becomes final.

(3) See subpart J for the rules on the finality of determinations.

(d) *Transfer of wages to or from the Railroad Retirement Board*—(1) *Wages erroneously reported.* We may transfer to or from the records of the Railroad Retirement Board earnings which were erroneously reported to us or to the Railroad Retirement Board.

(2) *Earnings certified by Railroad Retirement Board.* We may enter earnings for railroad work under subpart O if the earnings are certified by the Railroad Retirement Board.

(e) *Other circumstances permitting correction*—(1) *Investigation started before time limit ends.* We may correct an earnings record if the correction is made as the result of an investigation started before, but completed after the time limit ends. An investigation is started when we take an affirmative step leading to a decision on a question about the earnings record, for example, an investigation is started when one SSA unit asks another unit to obtain additional information or evidence. We will remove or reduce earnings on the record under this paragraph only if we carried out the investigation as promptly as circumstances permitted.

(2) *Error apparent on face of records.* We may correct an earnings record to correct errors, such as mechanical or clerical errors, which can be identified and corrected without going beyond any of the pertinent SSA records.

(3) *Fraud.* We may change any entry which was entered on the earnings record as the result of fraud.

(4) *Entries for wrong person or period.* We may correct errors in SSA records resulting from earnings being entered for the wrong person or period.

(5) *Less than correct wages on SSA records.* We may enter wages paid to you by an employer for a period if no part of those wages or less than the correct amount of those wages is entered on SSA records.

(6) *Wage payments under a statute.* We may enter and allocate wages awarded to you for a period as the result of a determination or agreement approved by

a court or administrative agency that enforces Federal or State statutes protecting your right to employment or wages.

[44 FR 38454, July 2, 1979, as amended at 57 FR 21600, May 21, 1992]

§ 404.823 Correction of the record of your earnings for work in the employ of the United States.

We may correct the record of your earnings to remove, reduce, or enter earnings for work in the employ of the United States only if—

(a) Correction is permitted under § 404.821 or § 404.822; and

(b) Any necessary determinations concerning the amount of remuneration paid for your work and the periods for which such remuneration was paid have been made as shown by—

(1) A tax return filed under section 3122 of the Internal Revenue Code (26 U.S.C. 3122); or

(2) A certification by the head of the Federal agency or instrumentality of which you have been an employee or his or her agent. A Federal instrumentality for these purposes includes a nonappropriated fund activity of the armed forces or Coast Guard.

[44 FR 38454, July 2, 1979, as amended at 55 FR 24891, June 19, 1990]

NOTICE OF REMOVAL OR REDUCTION OF AN ENTRY OF EARNINGS

§ 404.830 Notice of removal or reduction of your wages.

If we remove or reduce an amount of wages entered on the record of your earnings, we will notify you of this correction if we previously notified you of the amount of your wages for the period involved. We will notify your survivor if we previously notified you or your survivor of the amount of your earnings for the period involved.

§ 404.831 Notice of removal or reduction of your self-employment income.

If we remove or reduce an amount of self-employment income entered on the record of your earnings, we will notify you of this correction. We will notify your survivor if we previously notified you or your survivor of the amount of your earnings for the period involved.

Subpart J—Determinations, Administrative Review Process, and Reopening of Determinations and Decisions

AUTHORITY: Secs. 201(j), 204(f), 205(a)–(b), (d)–(h), and (j), 221, 223(i), 225, and 702(a)(5) of the Social Security Act (42 U.S.C. 401(j), 404(f), 405(a)–(b), (d)–(h), and (j), 421, 423(i), 425, and 902(a)(5)); sec. 5, Pub. L. 97–455, 96 Stat. 2500 (42 U.S.C. 405 note); secs. 5, 6(c)–(e), and 15, Pub. L. 98–460, 98 Stat. 1802 (42 U.S.C. 421 note); sec. 202, Pub. L. 108–203, 118 Stat. 509 (42 U.S.C. 902 note).

INTRODUCTION, DEFINITIONS, AND INITIAL DETERMINATIONS

§ 404.900 Introduction.

(a) *Explanation of the administrative review process.* This subpart explains the procedures we follow in determining your rights under title II of the Social Security Act. The regulations describe the process of administrative review and explain your right to judicial review after you have taken all the necessary administrative steps. These procedures apply also to persons claiming certain benefits under title XVIII of the Act (Medicare); see 42 CFR 405.904(a)(1). The administrative review process consists of several steps, which usually must be requested within certain time periods and in the following order:

(1) *Initial determination.* This is a determination we make about your entitlement or your continuing entitlement to benefits or about any other matter, as discussed in § 404.902, that gives you a right to further review.

(2) *Reconsideration.* If you are dissatisfied with an initial determination, you may ask us to reconsider it.

(3) *Hearing before an administrative law judge.* If you are dissatisfied with the reconsideration determination, you may request a hearing before an administrative law judge.

(4) *Appeals Council review.* If you are dissatisfied with the decision of the administrative law judge, you may request that the Appeals Council review the decision.

(5) *Federal court review.* When you have completed the steps of the administrative review process listed in paragraphs (a)(1) through (a)(4) of this section, we will have made our final decision. If you are dissatisfied with our final decision, you may request judicial review by filing an action in a Federal district court.

(6) *Expedited appeals process.* At some time after your initial determination has been reviewed, if you have no dispute with our findings of fact and our application and interpretation of the controlling laws, but you believe that a part of the law is unconstitutional, you may use the expedited appeals process. This process permits you to go directly to a Federal district court so that the constitutional issue may be resolved.

(b) *Nature of the administrative review process.* In making a determination or decision in your case, we conduct the administrative review process in an informal, nonadversary manner. In each step of the review process, you may present any information you feel is helpful to your case. Subject to the limitations on Appeals Council consideration of additional evidence (see §§ 404.970(b) and 404.976(b)), we will consider at each step of the review process any information you present as well as all the information in our records. You may present the information yourself or have someone represent you, including an attorney. If you are dissatisfied with our decision in the review process, but do not take the next step within the stated time period, you will lose your right to further administrative review and your right to judicial review, unless you can show us that there was good cause for your failure to make a timely request for review.

[45 FR 52081, Aug. 5, 1980, as amended at 51 FR 300, Jan. 3, 1986; 51 FR 8808, Mar. 14, 1986; 52 FR 4004, Feb. 9, 1987; 78 FR 57259, Sept. 18, 2013]

EFFECTIVE DATE NOTE: At 80 FR 14835, Mar. 20, 2015, § 404.900 was amended by revising paragraph (b), effective Apr. 20, 2015. For the convenience of the user, the revised text is set forth as follows:

§ 404.900 Introduction.

* * * * *

(b) *Nature of the administrative review process.* In making a determination or decision in your case, we conduct the administrative review process in an informal, non-adversarial manner. Subject to the limitations on Appeals Council consideration of additional evidence (*see* §§ 404.970(b) and 404.976(b)), we will consider at each step of the review process any information you present as well as all the information in our records. You may present the information yourself or have someone represent you, including an attorney. If you are dissatisfied with our decision in the review process, but do not take the next step within the stated time period, you will lose your right to further administrative review and your right to judicial review, unless you can show us that there was good cause for your failure to make a timely request for review.

§ 404.901 Definitions.

As used in this subpart:

Date you receive notice means 5 days after the date on the notice, unless you show us that you did not receive it within the 5-day period.

Decision means the decision made by an administrative law judge or the Appeals Council.

Determination means the initial determination or the reconsidered determination.

Preponderance of the evidence means such relevant evidence that as a whole shows that the existence of the fact to be proven is more likely than not.

Remand means to return a case for further review.

Substantial evidence means such relevant evidence as a reasonable mind might accept as adequate to support a conclusion.

Vacate means to set aside a previous action.

Waive means to give up a right knowingly and voluntarily.

We, us, or *our* refers to the Social Security Administration.

You or *your* refers to any person claiming a right under the old age, disability, dependents' or survivors' benefits program.

[45 FR 52081, Aug. 5, 1980, as amended at 73 FR 76943, Dec. 18, 2008]

§ 404.902 Administrative actions that are initial determinations.

Initial determinations are the determinations we make that are subject to administrative and judicial review. We

will base our initial determination on the preponderance of the evidence. We will state the important facts and give the reasons for our conclusions in the initial determination. In the old age, survivors' and disability insurance programs, initial determinations include, but are not limited to, determinations about—

(a) Your entitlement or your continuing entitlement to benefits;

(b) Your reentitlement to benefits;

(c) The amount of your benefit;

(d) A recomputation of your benefit;

(e) A reduction in your disability benefits because you also receive benefits under a workmen's compensation law;

(f) A deduction from your benefits on account of work;

(g) [Reserved]

(h) Termination of your benefits;

(i) Penalty deductions imposed because you failed to report certain events;

(j) Any overpayment or underpayment of your benefits;

(k) Whether an overpayment of benefits must be repaid to us;

(l) How an underpayment of benefits due a deceased person will be paid;

(m) The establishment or termination of a period of disability;

(n) A revision of your earnings record;

(o) Whether the payment of your benefits will be made, on your behalf, to a representative payee;

(p) Your drug addiction or alcoholism;

(q) Who will act as your payee if we determine that representative payment will be made;

(r) An offset of your benefits under § 404.408b because you previously received supplemental security income payments for the same period;

(s) Whether your completion of, or continuation for a specified period of time in, an appropriate program of vocational rehabilitation services, employment services, or other support services will increase the likelihood that you will not have to return to the disability benefit rolls, and thus, whether your benefits may be continued even though you are not disabled;

(t) Nonpayment of your benefits under § 404.468 because of your confinement in a jail, prison, or other penal institution or correctional facility for conviction of a felony;

(u) Whether or not you have a disabling impairment(s) as defined in § 404.1511;

(v) Nonpayment of your benefits under § 404.469 because you have not furnished us satisfactory proof of your Social Security number, or, if a Social Security number has not been assigned to you, you have not filed a proper application for one;

(w) A claim for benefits under § 404.633 based on alleged misinformation; and

(x) Whether we were negligent in investigating or monitoring or failing to investigate or monitor your representative payee, which resulted in the misuse of benefits by your representative payee.

[45 FR 52081, Aug. 5, 1980, as amended at 47 FR 4988, Feb. 3, 1982; 47 FR 31543, July 21, 1982; 49 FR 22272, May 29, 1984; 50 FR 20902, May 21, 1985; 56 FR 41790, Aug. 23, 1991; 59 FR 44925, Aug. 31, 1994; 60 FR 8147, Feb. 10, 1995; 68 FR 40123, July 7, 2003; 69 FR 60232, Oct. 7, 2004; 70 FR 36507, June 24, 2005; 73 FR 76943, Dec. 18, 2008]

§ 404.903 Administrative actions that are not initial determinations.

Administrative actions that are not initial determinations may be reviewed by us, but they are not subject to the administrative review process provided by this subpart, and they are not subject to judicial review. These actions include, but are not limited to, an action—

(a) Suspending benefits pending an investigation and determination of any factual issue relating to a deduction on account of work;

(b) Suspending benefits pending an investigation to determine if your disability has ceased;

(c) Denying a request to be made a representative payee;

(d) Certifying two or more family members for joint payment of benefits;

(e) Withholding less than the full amount of your monthly benefit to recover an overpayment;

(f) Determining the fee that may be charged or received by a person who has represented you in connection with a proceeding before us;

(g) Refusing to recognize, disqualifying, or suspending a person from acting as your representative in a proceeding before us (see §§ 404.1705 and 404.1745);

(h) Compromising, suspending or terminating collection of an overpayment under the Federal Claims Collection Act;

(i) Extending or not extending the time to file a report of earnings;

(j) Denying your request to extend the time period for requesting review of a determination or a decision;

(k) Denying your request to use the expedited appeals process;

(l) Denying your request to reopen a determination or a decision;

(m) Withholding temporarily benefits based on a wage earner's estimate of earnings to avoid creating an overpayment;

(n) Determining whether (and the amount of) travel expenses incurred are reimbursable in connection with proceedings before us;

(o) Denying your request to readjudicate your claim and apply an Acquiescence Ruling;

(p) Findings on whether we can collect an overpayment by using the Federal income tax refund offset procedure (see § 404.523);

(q) Determining whether an organization may collect a fee from you for expenses it incurred in serving as your representative payee (see § 404.2040a);

(r) Declining under § 404.633(f) to make a determination on a claim for benefits based on alleged misinformation because one or more of the conditions specified in § 404.633(f) are not met;

(s) The assignment of a monthly payment day (see § 404.1807);

(t) Determining whether we will refer information about your overpayment to a consumer reporting agency (see §§ 404.527 and 422.305 of this chapter);

(u) Determining whether we will refer your overpayment to the Department of the Treasury for collection by offset against Federal payments due you (see §§ 404.527 and 422.310 of this chapter);

(v) Determining whether we will order your employer to withhold from your disposable pay to collect an overpayment you received under title II of the Social Security Act (see part 422, subpart E, of this chapter);

(w) Determining whether provisional benefits are payable, the amount of the provisional benefits, and when provisional benefits terminate (see § 404.1592e);

(x) Determining whether to select your claim for the quick disability determination process under § 404.1619;

(y) The removal of your claim from the quick disability determination process under § 404.1619;

(z) Starting or discontinuing a continuing disability review;

(aa) Issuing a receipt in response to your report of a change in your work activity; and

(bb) Determining whether a non-attorney representative is eligible to receive direct fee payment as described in § 404.1717 of this part.

[45 FR 52081, Aug. 5, 1980, as amended at 51 FR 8808, Mar. 14, 1986; 55 FR 1018, Jan. 11, 1990; 56 FR 52469, Oct. 21, 1991; 57 FR 23057, June 1, 1992; 59 FR 44925, Aug. 31, 1994; 62 FR 6120, Feb. 11, 1997; 62 FR 64278, Dec. 5, 1997; 68 FR 74183, Dec. 23, 2003; 70 FR 57142, Sept. 30, 2005; 71 FR 16443, Mar. 31, 2006; 71 FR 66853, 66866, Nov. 17, 2006; 72 FR 51177, Sept. 6, 2007; 76 FR 45192, July 28, 2011; 76 FR 80245, Dec. 23, 2011; 80 FR 400, Jan. 6, 2015]

§ 404.904 Notice of the initial determination.

We will mail a written notice of our initial determination to you at your last known address. The written notice will explain in simple and clear language what we have determined and the reasons for and the effect of our determination. If our determination involves a determination of disability that is in whole or in part unfavorable to you, our written notice also will contain in understandable language a statement of the case setting forth the evidence on which our determination is based. The notice also will inform you of your right to reconsideration. We will not mail a notice if the beneficiary's entitlement to benefits has ended because of his or her death.

[72 FR 51177, Sept. 6, 2007]

§ 404.905 Effect of an initial determination.

An initial determination is binding unless you request a reconsideration

within the stated time period, or we revise the initial determination.

[51 FR 300, Jan. 3, 1986]

§ 404.906 Testing modifications to the disability determination procedures.

(a) *Applicability and scope.* Notwithstanding any other provision in this part or part 422 of this chapter, we are establishing the procedures set out in this section to test modifications to our disability determination process. These modifications will enable us to test, either individually or in one or more combinations, the effect of: having disability claim managers assume primary responsibility for processing an application for disability benefits; providing persons who have applied for benefits based on disability with the opportunity for an interview with a decisionmaker when the decisionmaker finds that the evidence in the file is insufficient to make a fully favorable determination or requires an initial determination denying the claim; having a single decisionmaker make the initial determination with assistance from medical consultants, where appropriate; and eliminating the reconsideration step in the administrative review process and having a claimant who is dissatisfied with the initial determination request a hearing before an administrative law judge. The model procedures we test will be designed to provide us with information regarding the effect of these procedural modifications and enable us to decide whether and to what degree the disability determination process would be improved if they were implemented on a national level.

(b) *Procedures for cases included in the tests.* Prior to commencing each test or group of tests in selected site(s), we will publish a notice in the FEDERAL REGISTER. The notice will describe which model or combinations of models we intend to test, where the specific test site(s) will be, and the duration of the test(s). The individuals who participate in the test(s) will be randomly assigned to a test group in each site where the tests are conducted. Paragraphs (b) (1) through (4) of this section lists descriptions of each model.

(1) In the disability claim manager model, when you file an application for benefits based on disability, a disability claim manager will assume primary responsibility for the processing of your claim. The disability claim manager will be the focal point for your contacts with us during the claims intake process and until an initial determination on your claim is made. The disability claim manager will explain the disability programs to you, including the definition of disability and how we determine whether you meet all the requirements for benefits based on disability. The disability claim manager will explain what you will be asked to do throughout the claims process and how you can obtain information or assistance through him or her. The disability claim manager will also provide you with information regarding your right to representation, and he or she will provide you with appropriate referral sources for representation. The disability claim manager may be either a State agency employee or a Federal employee. In some instances, the disability claim manager may be assisted by other individuals.

(2) In the single decisionmaker model, the decisionmaker will make the disability determination and may also determine whether the other conditions for entitlement to benefits based on disability are met. The decisionmaker will make the disability determination after any appropriate consultation with a medical or psychological consultant. The medical or psychological consultant will not be required to sign the disability determination forms we use to have the State agency certify the determination of disability to us (see § 404.1615). However, before an initial determination is made that a claimant is not disabled in any case where there is evidence which indicates the existence of a mental impairment, the decisionmaker will make every reasonable effort to ensure that a qualified psychiatrist or psychologist has completed the medical portion of the case review and any applicable residual functional capacity assessment pursuant to our existing procedures (see § 404.1617). In some instances the decisionmaker may be the disability claim manager described in paragraph

(b)(1) of this section. When the decisionmaker is a State agency employee, a team of individuals that includes a Federal employee will determine whether the other conditions for entitlement to benefits are met.

(3) In the predecision interview model, if the decisionmaker(s) finds that the evidence in your file is insufficient to make a fully favorable determination or requires an initial determination denying your claim, a predecision notice will be mailed to you. The notice will tell you that, before the decisionmaker(s) makes an initial determination about whether you are disabled, you may request a predecision interview with the decisionmaker(s). The notice will also tell you that you may submit additional evidence. You must request a predecision interview within 10 days after the date you receive the predecision notice. You must also submit any additional evidence within 10 days after you receive the predecision notice. If you request a predecision interview, the decisionmaker(s) will conduct the predecision interview in person, by videoconference, or by telephone as the decisionmaker(s) determines is appropriate under the circumstances. If you make a late request for a predecision interview, or submit additional evidence late, but show in writing that you had good cause under the standards in § 404.911 for missing the deadline, the decisionmaker(s) will extend the deadline. If you do not request the predecision interview, or if you do not appear for a scheduled predecision interview and do not submit additional evidence, or if you do not respond to our attempts to communicate with you, the decisionmaker(s) will make an initial determination based upon the evidence in your file. If you identify additional evidence during the predecision interview, which was previously not available, the decisionmaker(s) will advise you to submit the evidence. If you are unable to do so, the decisionmaker(s) may assist you in obtaining it. The decisionmaker(s) also will advise you of the specific timeframes you have for submitting any additional evidence identified during the predecision interview. If you have no treating source(s) (see § 404.1502), or your treating source(s) is unable or unwilling to provide the necessary evidence, or there is a conflict in the evidence that cannot be resolved through evidence from your treating source(s), the decisionmaker(s) may arrange a consultative examination or resolve conflicts according to existing procedures (see § 404.1519a). If you attend the predecision interview, or do not attend the predecision interview but you submit additional evidence, the decisionmaker(s) will make an initial determination based on the evidence in your file, including the additional evidence you submit or the evidence obtained as a result of the predecision notice or interview, or both.

(4) In the reconsideration elimination model, we will modify the disability determination process by eliminating the reconsideration step of the administrative review process. If you receive an initial determination on your claim for benefits based on disability, and you are dissatisfied with the determination, we will notify you that you may request a hearing before an administrative law judge.

[60 FR 20026, Apr. 24, 1995, as amended at 73 FR 2415, Jan. 15, 2008; 76 FR 24806, May 3, 2011]

RECONSIDERATION

§ 404.907 Reconsideration—general.

If you are dissatisfied with the initial determination, reconsideration is the first step in the administrative review process that we provide, except that we provide the opportunity for a hearing before an administrative law judge as the first step for those situations described in §§ 404.930 (a)(6) and (a)(7), where you appeal an initial determination denying your request for waiver of adjustment or recovery of an overpayment (see § 404.506). If you are dissatisfied with our reconsidered determination, you may request a hearing before an administrative law judge.

[61 FR 56132, Oct. 31, 1996]

§ 404.908 Parties to a reconsideration.

(a) *Who may request a reconsideration.* If you are dissatisfied with the initial determination, you may request that we reconsider it. In addition, a person who shows in writing that his or her

rights may be adversely affected by the initial determination may request a reconsideration.

(b) *Who are parties to a reconsideration.* After a request for the reconsideration, you and any person who shows in writing that his or her rights are adversely affected by the initial determination will be parties to the reconsideration.

§ 404.909 How to request reconsideration.

(a) We shall reconsider an initial determination if you or any other party to the reconsideration files a written request—

(1) Within 60 days after the date you receive notice of the initial determination (or within the extended time period if we extend the time as provided in paragraph (b) of this section);

(2) At one of our offices, the Veterans Administration Regional Office in the Philippines, or an office of the Railroad Retirement Board if you have 10 or more years of service in the railroad industry.

(b) *Extension of time to request a reconsideration.* If you want a reconsideration of the initial determination but do not request one in time, you may ask us for more time to request a reconsideration. Your request for an extension of time must be in writing and must give the reasons why the request for reconsideration was not filed within the stated time period. If you show us that you had good cause for missing the deadline, we will extend the time period. To determine whether good cause exists, we use the standards explained in § 404.911.

§ 404.911 Good cause for missing the deadline to request review.

(a) In determining whether you have shown that you had good cause for missing a deadline to request review we consider—

(1) What circumstances kept you from making the request on time;

(2) Whether our action misled you;

(3) Whether you did not understand the requirements of the Act resulting from amendments to the Act, other legislation, or court decisions; and

(4) Whether you had any physical, mental, educational, or linguistic limitations (including any lack of facility with the English language) which prevented you from filing a timely request or from understanding or knowing about the need to file a timely request for review.

(b) Examples of circumstances where good cause may exist include, but are not limited to, the following situations:

(1) You were seriously ill and were prevented from contacting us in person, in writing, or through a friend, relative, or other person.

(2) There was a death or serious illness in your immediate family.

(3) Important records were destroyed or damaged by fire or other accidental cause.

(4) You were trying very hard to find necessary information to support your claim but did not find the information within the stated time periods.

(5) You asked us for additional information explaining our action within the time limit, and within 60 days of receiving the explanation you requested reconsideration or a hearing, or within 30 days of receiving the explanation you requested Appeal Council review or filed a civil suit.

(6) We gave you incorrect or incomplete information about when and how to request administrative review or to file a civil suit.

(7) You did not receive notice of the determination or decision.

(8) You sent the request to another Government agency in good faith within the time limit and the request did not reach us until after the time period had expired.

(9) Unusual or unavoidable circumstances exist, including the circumstances described in paragraph (a)(4) of this section, which show that you could not have known of the need to file timely, or which prevented you from filing timely.

[45 FR 52081, Aug. 5, 1980, as amended at 59 FR 1634, Jan. 12, 1994]

§ 404.913 Reconsideration procedures.

(a) *Case review.* With the exception of the type of case described in paragraph (b) of this section, the reconsideration process consists of a case review. Under a case review procedure, we will give

you and the other parties to the reconsideration an opportunity to present additional evidence to us. The official who reviews your case will then make a reconsidered determination based on all of this evidence.

(b) *Disability hearing*. If you have been receiving benefits based on disability and you request reconsideration of an initial or revised determination that, based on medical factors, you are not now disabled, we will give you and the other parties to the reconsideration an opportunity for a disability hearing. (See §§ 404.914 through 404.918.)

[51 FR 300, Jan. 3, 1986]

§ 404.914 Disability hearing—general.

(a) *Availability*. We will provide you with an opportunity for a disability hearing if:

(1) You have been receiving benefits based on a medical impairment that renders you disabled;

(2) We have made an initial or revised determination based on medical factors that you are not now disabled because your impairment:

(i) Has ceased;

(ii) Did not exist; or

(iii) Is no longer disabling; and

(3) You make a timely request for reconsideration of the initial or revised determination.

(b) *Scope*. The disability hearing will address only the initial or revised determination, based on medical factors, that you are not now disabled. Any other issues which arise in connection with your request for reconsideration will be reviewed in accordance with the reconsideration procedures described in § 404.913(a).

(c) *Time and place*—(1) *General*. Either the State agency or the Associate Commissioner for Disability Determinations or his or her delegate, as appropriate, will set the time and place of your disability hearing. We will send you a notice of the time and place of your disability hearing at least 20 days before the date of the hearing. You may be expected to travel to your disability hearing. (See §§ 404.999a–404.999d regarding reimbursement for travel expenses.)

(2) *Change of time or place*. If you are unable to travel or have some other reason why you cannot attend your disability hearing at the scheduled time or place, you should request at the earliest possible date that the time or place of your hearing be changed. We will change the time or place if there is good cause for doing so under the standards in § 404.936 (c) and (d).

(d) *Combined issues*. If a disability hearing is available to you under paragraph (a) of this section, and you file a new application for benefits while your request for reconsideration is still pending, we may combine the issues on both claims for the purpose of the disability hearing and issue a combined initial/reconsidered determination which is binding with respect to the common issues on both claims.

(e) *Definition*. For purposes of the provisions regarding disability hearings (§§ 404.914 through 404.918) *we*, *us* or *our* means the Social Security Administration or the State agency.

[51 FR 300, Jan. 3, 1986, as amended at 51 FR 8808, Mar. 14, 1986; 71 FR 10427, Mar. 1, 2006]

§ 404.915 Disability hearing—disability hearing officers.

(a) *General*. Your disability hearing will be conducted by a disability hearing officer who was not involved in making the determination you are appealing. The disability hearing officer will be an experienced disability examiner, regardless of whether he or she is appointed by a State agency or by the Associate Commissioner for Disability Determinations or his or her delegate, as described in paragraphs (b) and (c) of this section.

(b) *State agency hearing officers*—(1) *Appointment of State agency hearing officers*. If a State agency made the initial or revised determination that you are appealing, the disability hearing officer who conducts your disability hearing may be appointed by a State agency. If the disability hearing officer is appointed by a State agency, that individual will be employed by an adjudicatory unit of the State agency other than the adjudicatory unit which made the determination you are appealing.

(2) *State agency* defined. For purposes of this subpart, *State agency* means the adjudicatory component in the State which issues disability determinations.

(c) *Federal hearing officers*. The disability hearing officer who conducts

your disability hearing will be appointed by the Associate Commissioner for Disability Determinations or his or her delegate if:

(1) A component of our office other than a State agency made the determination you are appealing; or

(2) The State agency does not appoint a disability hearing officer to conduct your disability hearing under paragraph (b) of this section.

[51 FR 301, Jan. 3, 1986, as amended at 71 FR 10428, Mar. 1, 2006]

§ 404.916 Disability hearing—procedures.

(a) *General*. The disability hearing will enable you to introduce evidence and present your views to a disability hearing officer if you are dissatisfied with an initial or revised initial determination, based on medical factors, that you are not now disabled as described in § 404.914(a)(2).

(b) *Your procedural rights*. We will advise you that you have the following procedural rights in connection with the disability hearing process:

(1) You may request that we assist you in obtaining pertinent evidence for your disability hearing and, if necessary, that we issue a subpoena to compel the production of certain evidence or testimony. We will follow subpoena procedures similar to those described in § 404.950(d) for the administrative law judge hearing process;

(2) You may have a representative at the hearing appointed under subpart R of this part, or you may represent yourself;

(3) You or your representative may review the evidence in your case file, either on the date of your hearing or at an earlier time at your request, and present additional evidence;

(4) You may present witnesses and question any witnesses at the hearing;

(5) You may waive your right to appear at the hearing. If you do not appear at the hearing, the disability hearing officer will prepare and issue a written reconsidered determination based on the information in your case file.

(c) *Case preparation*. After you request reconsideration, your case file will be reviewed and prepared for the hearing. This review will be conducted in the component of our office (including a State agency) that made the initial or revised determination, by personnel who were not involved in making the initial or revised determination. Any new evidence you submit in connection with your request for reconsideration will be included in this review. If necessary, further development of the evidence, including arrangements for medical examinations, will be undertaken by this component. After the case file is prepared for the hearing, it will be forwarded by this component to the disability hearing officer for a hearing. If necessary, the case file may be sent back to this component at any time prior to the issuance of the reconsidered determination for additional development. Under paragraph (d) of this section, this component has the authority to issue a favorable reconsidered determination at any time in its development process.

(d) *Favorable reconsideration determination without a hearing*. If all the evidence in your case file supports a finding that you are now disabled, either the component that prepares your case for hearing under paragraph (c) or the disability hearing officer will issue a written favorable reconsideration determination, even if a disability hearing has not yet been held.

(e) *Opportunity to submit additional evidence after the hearing*. At your request, the disability hearing officer may allow up to 15 days after your disability hearing for receipt of evidence which is not available at the hearing, if:

(1) The disability hearing officer determines that the evidence has a direct bearing on the outcome of the hearing; and

(2) The evidence could not have been obtained before the hearing.

(f) *Opportunity to review and comment on evidence obtained or developed by us after the hearing*. If, for any reason, additional evidence is obtained or developed by us after your disability hearing, and all evidence taken together can be used to support a reconsidered determination that is unfavorable to you with regard to the medical factors of eligibility, we will notify you, in writing, and give you an opportunity to

review and comment on the additional evidence. You will be given 10 days from the date you receive our notice to submit your comments (in writing or, in appropriate cases, by telephone), unless there is good cause for granting you additional time, as illustrated by the examples in § 404.911(b). Your comments will be considered before a reconsidered determination is issued. If you believe that it is necessary to have further opportunity for a hearing with respect to the additional evidence, a supplementary hearing may be scheduled at your request. Otherwise, we will ask for your written comments on the additional evidence, or, in appropriate cases, for your telephone comments.

[51 FR 301, Jan. 3, 1986]

§ 404.917 Disability hearing—disability hearing officer's reconsidered determination.

(a) *General*. The disability hearing officer who conducts your disability hearing will prepare and will also issue a written reconsidered determination, unless:

(1) The disability hearing officer sends the case back for additional development by the component that prepared the case for the hearing, and that component issues a favorable determination, as permitted by § 404.916(c);

(2) It is determined that you are engaging in substantial gainful activity and that you are therefore not disabled; or

(3) The reconsidered determination prepared by the disability hearing officer is reviewed under § 404.918.

(b) *Content*. The disability hearing officer's reconsidered determination will give the findings of fact and the reasons for the reconsidered determination. The disability hearing officer must base the reconsidered determination on the preponderance of the evidence offered at the disability hearing or otherwise included in your case file.

(c) *Notice*. We will mail you and the other parties a notice of reconsidered determination in accordance with § 404.922.

(d) *Effect*. The disability hearing officer's reconsidered determination, or, if it is changed under § 404.918, the reconsidered determination that is issued by the Associate Commissioner for Disability Determinations or his or her delegate, is binding in accordance with § 404.921, subject to the exceptions specified in that section.

[51 FR 302, Jan. 3, 1986, as amended at 71 FR 10428, Mar. 1, 2006; 73 FR 76943, Dec. 18, 2008]

§ 404.918 Disability hearing—review of the disability hearing officer's reconsidered determination before it is issued.

(a) *General*. The Associate Commissioner for Disability Determinations or his or her delegate may select a sample of disability hearing officers' reconsidered determinations, before they are issued, and review any such case to determine its correctness on any grounds he or she deems appropriate. The Associate Commissioner or his or her delegate shall review any case within the sample if:

(1) There appears to be an abuse of discretion by the hearing officer;

(2) There is an error of law; or

(3) The action, findings or conclusions of the disability hearing officer are not supported by substantial evidence.

NOTE TO PARAGRAPH (a): If the review indicates that the reconsidered determination prepared by the disability hearing officer is correct, it will be dated and issued immediately upon completion of the review. If the reconsidered determination prepared by the disability hearing officer is found by the Associate Commissioner or his or her delegate to be deficient, it will be changed as described in paragraph (b) of this section.

(b) *Methods of correcting deficiencies in the disability hearing officer's reconsidered determination*. If the reconsidered determination prepared by the disability hearing officer is found by the Associate Commissioner for Disability Determinations or his or her delegate to be deficient, the Associate Commissioner or his or her delegate will take appropriate action to assure that the deficiency is corrected before a reconsidered determination is issued. The action taken by the Associate Commissioner or his or her delegate will take one of two forms:

(1) The Associate Commissioner or his or her delegate may return the case file either to the component responsible for preparing the case for hearing

or to the disability hearing officer, for appropriate further action; or

(2) The Associate Commissioner or his or her delegate may issue a written reconsidered determination which corrects the deficiency.

(c) *Further action on your case if it is sent back by the Associate Commissioner for Disability Determinations or his or her delegate either to the component that prepared your case for hearing or to the disability hearing officer.* If the Associate Commissioner for Disability Determinations or his or her delegate sends your case back either to the component responsible for preparing the case for hearing or to the disability hearing officer for appropriate further action, as provided in paragraph (b)(1) of this section, any additional proceedings in your case will be governed by the disability hearing procedures described in § 404.916(f) or if your case is returned to the disability hearing officer and an unfavorable determination is indicated, a supplementary hearing may be scheduled for you before a reconsidered determination is reached in your case.

(d) *Opportunity to comment before the Associate Commissioner for Disability Determinations or his or her delegate issues a reconsidered determination that is unfavorable to you.* If the Associate Commissioner for Disability Determinations or his or her delegate proposes to issue a reconsidered determination as described in paragraph (b)(2) of this section, and that reconsidered determination is unfavorable to you, he or she will send you a copy of the proposed reconsidered determination with an explanation of the reasons for it, and will give you an opportunity to submit written comments before it is issued. At your request, you will also be given an opportunity to inspect the pertinent materials in your case file, including the reconsidered determination prepared by the disability hearing officer, before submitting your comments. You will be given 10 days from the date you receive the Associate Commissioner's notice of proposed action to submit your written comments, unless additional time is necessary to provide access to the pertinent file materials or there is good cause for providing more time, as illustrated by the examples in § 404.911(b). The Associate Commissioner or his or her delegate will consider your comments before taking any further action on your case.

[71 FR 10428, Mar. 1, 2006]

§ 404.919 Notice of another person's request for reconsideration.

If any other person files a request for reconsideration of the initial determination in your case, we shall notify you at your last known address before we reconsider the initial determination. We shall also give you an opportunity to present any evidence you think helpful to the reconsidered determination.

[45 FR 52081, Aug. 5, 1980. Redesignated at 51 FR 302, Jan. 3, 1986]

§ 404.920 Reconsidered determination.

After you or another person requests a reconsideration, we will review the evidence we considered in making the initial determination and any other evidence we receive. We will make our determination based on the preponderance of the evidence.

[73 FR 76943, Dec. 18, 2008]

§ 404.921 Effect of a reconsidered determination.

The reconsidered determination is binding unless—

(a) You or any other party to the reconsideration requests a hearing before an administrative law judge within the stated time period and a decision is made;

(b) The expedited appeals process is used; or

(c) The reconsidered determination is revised.

[51 FR 302, Jan. 3, 1986]

§ 404.922 Notice of a reconsidered determination.

We shall mail a written notice of the reconsidered determination to the parties at their last known address. We shall state the specific reasons for the determination and tell you and any other parties of the right to a hearing. If it is appropriate, we will also tell you and any other parties how to use the expedited appeals process.

[45 FR 52081, Aug. 5, 1980. Redesignated at 51 FR 302, Jan. 3, 1986]

EXPEDITED APPEALS PROCESS

§ 404.923 Expedited appeals process—general.

By using the expedited appeals process you may go directly to a Federal district court without first completing the administrative review process that is generally required before the court will hear your case.

§ 404.924 When the expedited appeals process may be used.

You may use the expedited appeals process if all of the following requirements are met:

(a) We have made an initial and a reconsidered determination; an administrative law judge has made a hearing decision; or Appeals Council review has been requested, but a final decision has not been issued.

(b) You are a party to the reconsidered determination or the hearing decision.

(c) You have submitted a written request for the expedited appeals process.

(d) You have claimed, and we agree, that the only factor preventing a favorable determination or decision is a provision in the law that you believe is unconstitutional.

(e) If you are not the only party, all parties to the determination or decision agree to request the expedited appeals process.

§ 404.925 How to request expedited appeals process.

(a) *Time of filing request.* You may request the expedited appeals process—

(1) Within 60 days after the date you receive notice of the reconsidered determination (or within the extended time period if we extend the time as provided in paragraph (c) of this section);

(2) At any time after you have filed a timely request for a hearing but before you receive notice of the administrative law judge's decision;

(3) Within 60 days after the date you receive a notice of the administrative law judge's decision or dismissal (or within the extended time period if we extend the time as provided in paragraph (c) of this section); or

(4) At any time after you have filed a timely request for Appeals Council review, but before you receive notice of the Appeals Council's action.

(b) *Place of filing request.* You may file a written request for the expedited appeals process at one of our offices, the Veterans Administration Regional Office in the Philippines, or an office of the Railroad Retirement Board if you have 10 or more years of service in the railroad industry.

(c) *Extension of time to request expedited appeals process.* If you want to use the expedited appeals process but do not request it within the stated time period, you may ask for more time to submit your request. Your request for an extension of time must be in writing and must give the reasons why the request for the expedited appeals process was not filed within the stated time period. If you show that you had good cause for missing the deadline, the time period will be extended. To determine whether good cause exists, we use the standards explained in § 404.911.

§ 404.926 Agreement in expedited appeals process.

If you meet all the requirements necessary for the use of the expedited appeals process, our authorized representative shall prepare an agreement. The agreement must be signed by you, by every other party to the determination or decision and by our authorized representative. The agreement must provide that—

(a) The facts in your claim are not in dispute;

(b) The sole issue in dispute is whether a provision of the Act that applies to your case is unconstitutional;

(c) Except for your belief that a provision of the Act is unconstitutional, you agree with our interpretation of the law;

(d) If the provision of the Act that you believe is unconstitutional were not applied to your case, your claim would be allowed; and

(e) Our determination or the decision is final for the purpose of seeking judicial review.

§ 404.927 Effect of expedited appeals process agreement.

After an expedited appeals process agreement is signed, you will not need to complete the remaining steps of the

administrative review process. Instead, you may file an action in a Federal district court within 60 days after the date you receive notice (a signed copy of the agreement will be mailed to you and will constitute notice) that the agreement has been signed by our authorized representative.

[45 FR 52081, Aug. 5, 1980, as amended at 49 FR 46369, Nov. 26, 1984]

§ 404.928 Expedited appeals process request that does not result in agreement.

If you do not meet all of the requirements necessary to use the expedited appeals process, we shall tell you that your request to use this process is denied and that your request will be considered as a request for a hearing or Appeals Council review, whichever is appropriate.

HEARING BEFORE AN ADMINISTRATIVE LAW JUDGE

§ 404.929 Hearing before an administrative law judge—general.

If you are dissatisfied with one of the determinations or decisions listed in § 404.930, you may request a hearing. The Deputy Commissioner for Disability Adjudication and Review, or his or her delegate, will appoint an administrative law judge to conduct the hearing. If circumstances warrant, the Deputy Commissioner, or his or her delegate, may assign your case to another administrative law judge. At the hearing, you may appear in person, by video teleconferencing, or, under certain extraordinary circumstances, by telephone. You may submit new evidence, examine the evidence used in making the determination or decision under review, and present and question witnesses. The administrative law judge who conducts the hearing may ask you questions. He or she will issue a decision based on the preponderance of the evidence in the hearing record. If you waive your right to appear at the hearing, in person, by video teleconferencing, or by telephone, the administrative law judge will make a decision based on the preponderance of the evidence that is in the file and any new evidence that may have been submitted for consideration.

[79 FR 35931, June 25, 2014]

§ 404.930 Availability of a hearing before an administrative law judge.

(a) You or another party may request a hearing before an administrative law judge if we have made—

(1) A reconsidered determination;

(2) A revised determination of an initial determination, unless the revised determination concerns the issue of whether, based on medical factors, you are disabled;

(3) A reconsideration of a revised initial determination concerning the issue of whether, based on medical factors, you are disabled;

(4) A revised reconsidered determination;

(5) A revised decision based on evidence not included in the record on which the prior decision was based;

(6) An initial determination denying waiver of adjustment or recovery of an overpayment based on a personal conference (see § 404.506); or

(7) An initial determination denying waiver of adjustment or recovery of an overpayment based on a review of the written evidence of record (see § 404.506), and the determination was made concurrent with, or subsequent to, our reconsideration determination regarding the underlying overpayment but before an administrative law judge holds a hearing.

(b) We will hold a hearing only if you or another party to the hearing file a written request for a hearing.

[45 FR 52081, Aug. 5, 1980, as amended at 51 FR 303, Jan. 3, 1986; 61 FR 56132, Oct. 31, 1996; 73 FR 2415, Jan. 15, 2008; 76 FR 24806, May 3, 2011]

§ 404.932 Parties to a hearing before an administrative law judge.

(a) *Who may request a hearing.* You may request a hearing if a hearing is available under § 404.930. In addition, a person who shows in writing that his or her rights may be adversely affected by the decision may request a hearing.

(b) *Who are parties to a hearing.* After a request for a hearing is made, you, the other parties to the initial, reconsidered, or revised determination, and any other person who shows in writing

that his or her rights may be adversely affected by the hearing, are parties to the hearing. In addition, any other person may be made a party to the hearing if his or her rights may be adversely affected by the decision, and we notify the person to appear at the hearing or to present evidence supporting his or her interest.

[45 FR 52081, Aug. 5, 1980, as amended at 51 FR 303, Jan. 3, 1986; 75 FR 39160, July 8, 2010]

§ 404.933 How to request a hearing before an administrative law judge.

(a) *Written request.* You may request a hearing by filing a written request. You should include in your request—

(1) The name and social security number of the wage earner;

(2) The reasons you disagree with the previous determination or decision;

(3) A statement of additional evidence to be submitted and the date you will submit it; and

(4) The name and address of any designated representative.

(b) *When and where to file.* The request must be filed—

(1) Within 60 days after the date you receive notice of the previous determination or decision (or within the extended time period if we extend the time as provided in paragraph (c) of this section);

(2) At one of our offices, the Veterans Administration Regional Office in the Philippines, or an office of the Railroad Retirement Board for persons having 10 or more years of service in the railroad industry.

(c) *Extension of time to request a hearing.* If you have a right to a hearing but do not request one in time, you may ask for more time to make your request. The request for an extension of time must be in writing and it must give the reasons why the request for a hearing was not filed within the stated time period. You may file your request for an extension of time at one of our offices. If you show that you had good cause for missing the deadline, the time period will be extended. To determine whether good cause exists, we use the standards explained in § 404.911.

[45 FR 52081, Aug. 5, 1980, as amended at 51 FR 303, Jan. 3, 1986]

§ 404.935 Submitting evidence prior to a hearing before an administrative law judge.

If possible, the evidence or a summary of evidence you wish to have considered at the hearing should be submitted to the administrative law judge with the request for hearing or within 10 days after filing the request. Each party shall make every effort to be sure that all material evidence is received by the administrative law judge or is available at the time and place set for the hearing.

[45 FR 52081, Aug. 5, 1980, as amended at 51 FR 303, Jan. 3, 1986]

EFFECTIVE DATE NOTE: At 80 FR 14835, Mar. 20, 2015, § 404.935 was revised, effective Apr. 20, 2015. For the convenience of the user, the revised text is set forth as follows:

§ 404.935 Submitting evidence prior to a hearing before an administrative law judge.

You should submit information or evidence as required by § 404.1512 or any summary of the evidence to the administrative law judge with the request for hearing or within 10 days after filing the request, if possible. Each party shall make every effort to ensure that the administrative law judge receives all of the evidence (*see* § 404.1512) or all of the evidence is available at the time and place set for the hearing.

§ 404.936 Time and place for a hearing before an administrative law judge.

(a) *General.* We may set the time and place for any hearing. We may change the time and place, if it is necessary. After sending you reasonable notice of the proposed action, the administrative law judge may adjourn or postpone the hearing or reopen it to receive additional evidence any time before he or she notifies you of a hearing decision.

(b) *Where we hold hearings.* We hold hearings in the 50 States, the District of Columbia, American Samoa, Guam, the Northern Mariana Islands, the Commonwealth of Puerto Rico, and the United States Virgin Islands. The ''place'' of the hearing is the hearing office or other site(s) at which you and any other parties to the hearing are located when you make your appearance(s) before the administrative law judge, whether in person, by video teleconferencing, or by telephone.

(c) *Determining how appearances will be made.* In setting the time and place of the hearing, we will consider the following:

(1) We will consult with the administrative law judge to determine the status of case preparation and to determine whether your appearance, or the appearance of any other party to the hearing, will be made in person, by video teleconferencing or, under extraordinary circumstances, by telephone. The administrative law judge will determine that your appearance, or the appearance of any other party to the hearing, be conducted by video teleconferencing if video teleconferencing equipment is available to conduct the appearance, use of video teleconferencing to conduct the appearance would be more efficient than conducting the appearance in person, and the administrative law judge determines that there is no circumstance in the particular case that prevents the use of video teleconferencing to conduct the appearance. The administrative law judge will direct you or another party to the hearing to appear by telephone when:

(i) An appearance in person is not possible, such as if you are incarcerated, the facility will not allow a hearing to be held at the facility, and video teleconferencing is not available; or

(ii) The administrative law judge determines, either on his or her own, or at your request or at the request of any other party to the hearing, that extraordinary circumstances prevent you or another party to the hearing from appearing at the hearing in person or by video teleconferencing.

(2) The administrative law judge will determine whether any person other than you or any other party to the hearing, including a medical expert or a vocational expert, will appear at the hearing in person, by video teleconferencing, or by telephone. If you or any other party to the hearing objects to any other person appearing by video teleconferencing or by telephone, the administrative law judge will decide, either in writing or at the hearing, whether to have that person appear in person, by video teleconferencing, or by telephone. The administrative law judge will direct a person, other than you or any other party to the hearing if we are notified as provided in paragraph (e) of this section that you or any other party to the hearing objects to appearing by video teleconferencing, to appear by video teleconferencing or telephone when the administrative law judge determines:

(i) Video teleconferencing or telephone equipment is available;

(ii) Use of video teleconferencing or telephone equipment would be more efficient than conducting an examination of a witness in person, and;

(iii) The ALJ determines there is no other reason why video teleconferencing or telephone should not be used.

(d) *Objecting to appearing by video teleconferencing.* Prior to scheduling your hearing, we will notify you that we may schedule you to appear by video teleconferencing. If you object to appearing by video teleconferencing, you must notify us in writing within 30 days after the date you receive the notice. If you notify us within that time period and your residence does not change while your request for hearing is pending, we will set your hearing for a time and place at which you may make your appearance before the administrative law judge in person.

(1) Notwithstanding any objections you may have to appearing by video teleconferencing, if you change your residence while your request for hearing is pending, we may determine how you will appear, including by video teleconferencing, as provided in paragraph (c)(1) of this section. For us to consider your change of residence when we schedule your hearing, you must submit evidence verifying your new residence.

(2) If you notify us that you object to appearing by video teleconferencing more than 30 days after the date you receive our notice, we will extend the time period if you show you had good cause for missing the deadline. To determine whether good cause exists for extending the deadline, we use the standards explained in § 404.911.

(e) *Objecting to the time or place of the hearing.* If you object to the time or place of the hearing, you must:

(1) Notify us in writing at the earliest possible opportunity, but not later than 5 days before the date set for

the hearing or 30 days after receiving notice of the hearing, whichever is earlier (or within the extended time period if we extend the time as provided in paragraph (e)(3) of this section); and

(2) State the reason(s) for your objection and state the time and place you want the hearing to be held. We will change the time or place of the hearing if the administrative law judge finds you have good cause, as determined under paragraph (f) of this section. Section 404.938 provides procedures we will follow when you do not respond to a notice of hearing.

(3) If you notify us that you object to the time or place of hearing less than 5 days before the date set for the hearing or, if earlier, more than 30 days after receiving notice of the hearing, we will extend the time period if you show you had good cause for missing the deadline. To determine whether good cause exists for extending the deadline, we use the standards explained in § 404.911.

(f) *Good cause for changing the time or place.* The administrative law judge will determine whether good cause exists for changing the time or place of your scheduled hearing. However, a finding that good cause exists to reschedule the time or place of your hearing will not change the assignment of the administrative law judge for your case, unless we determine reassignment will promote more efficient administration of the hearing process.

(1) We will reschedule your hearing, if your reason is one of the following circumstances and is supported by the evidence:

(i) A serious physical or mental condition or incapacitating injury makes it impossible for you or your representative to travel to the hearing, or a death in the family occurs; or

(ii) Severe weather conditions make it impossible for you or your representative to travel to the hearing.

(2) In determining whether good cause exists in circumstances other than those set out in paragraph (f)(1) of this section, the administrative law judge will consider your reason(s) for requesting the change, the facts supporting it, and the impact of the proposed change on the efficient administration of the hearing process. Factors affecting the impact of the change include, but are not limited to, the effect on the processing of other scheduled hearings, delays that might occur in rescheduling your hearing, and whether we previously granted you any changes in the time or place of your hearing. Examples of such other circumstances that you might give for requesting a change in the time or place of the hearing include, but are not limited to, the following:

(i) You unsuccessfully attempted to obtain a representative and need additional time to secure representation;

(ii) Your representative was appointed within 30 days of the scheduled hearing and needs additional time to prepare for the hearing;

(iii) Your representative has a prior commitment to be in court or at another administrative hearing on the date scheduled for the hearing;

(iv) A witness who will testify to facts material to your case would be unavailable to attend the scheduled hearing and the evidence cannot be otherwise obtained;

(v) Transportation is not readily available for you to travel to the hearing; or

(vi) You are unrepresented, and you are unable to respond to the notice of hearing because of any physical, mental, educational, or linguistic limitations (including any lack of facility with the English language) which you may have.

(g) *Good cause in other circumstances.* In determining whether good cause exists in circumstances other than those set out in paragraph (e) of this section, the administrative law judge will consider your reason for requesting the change, the facts supporting it, and the impact of the proposed change on the efficient administration of the hearing process. Factors affecting the impact of the change include, but are not limited to, the effect on the processing of other scheduled hearings, delays which might occur in rescheduling your hearing, and whether any prior changes were granted to you. Examples of such other circumstances, which you might give for requesting a change in the time or place of the hearing, include, but are not limited to, the following:

(1) You have attempted to obtain a representative but need additional time;

(2) Your representative was appointed within 30 days of the scheduled hearing and needs additional time to prepare for the hearing;

(3) Your representative has a prior commitment to be in court or at another administrative hearing on the date scheduled for the hearing;

(4) A witness who will testify to facts material to your case would be unavailable to attend the scheduled hearing and the evidence cannot be otherwise obtained;

(5) Transportation is not readily available for you to travel to the hearing;

(6) You live closer to another hearing site; or

(7) You are unrepresented, and you are unable to respond to the notice of hearing because of any physical, mental, educational, or linguistic limitations (including any lack of facility with the English language) which you may have.

(h) *Consultation procedures.* Before we exercise the authority to set the time and place for an administrative law judge's hearings, we will consult with the appropriate hearing office chief administrative law judge to determine if there are any reasons why we should not set the time and place of the administrative law judge's hearings. If the hearing office chief administrative law judge does not state a reason that we believe justifies the limited number of hearings scheduled by the administrative law judge, we will then consult with the administrative law judge before deciding whether to begin to exercise our authority to set the time and place for the administrative law judge's hearings. If the hearing office chief administrative law judge states a reason that we believe justifies the limited number of hearings scheduled by the administrative law judge, we will not exercise our authority to set the time and place for the administrative law judge's hearings. We will work with the hearing office chief administrative law judge to identify those circumstances where we can assist the administrative law judge and address any impediment that may affect the scheduling of hearings.

(i) *Pilot program.* The provisions of the first and second sentences of paragraph (a), the first sentence of paragraph (c)(1), and paragraph (g) of this section are a pilot program. These provisions will no longer be effective on August 10, 2015, unless we terminate them earlier or extend them beyond that date by notice of a final rule in the FEDERAL REGISTER.

[68 FR 5218, Feb. 3, 2003, as amended at 75 FR 39160, July 8, 2010; 78 FR 29626, May 21, 2013; 78 FR 45452, July 29, 2013; 79 FR 41882, July 18, 2014; 79 FR 35931, June 25, 2014]

§ 404.937 Protecting the safety of the public and our employees in our hearing process.

(a) Notwithstanding any other provision in this part or part 422 of this chapter, we are establishing the procedures set out in this section to ensure the safety of the public and our employees in our hearing process.

(b)(1) At the request of any hearing office employee, the Hearing Office Chief Administrative Law Judge will determine, after consultation with the presiding administrative law judge, whether a claimant or other individual poses a reasonable threat to the safety of our employees or other participants in the hearing. The Hearing Office Chief Administrative Law Judge will find that a claimant or other individual poses a threat to the safety of our employees or other participants in the hearing when he or she determines that the individual has made a threat and there is a reasonable likelihood that the claimant or other individual could act on the threat or when evidence suggests that a claimant or other individual poses a threat. In making a finding under this paragraph, the Hearing Office Chief Administrative Law Judge will consider all relevant evidence, including any information we have in the claimant's record and any information we have regarding the claimant's or other individual's past conduct.

(2) If the Hearing Office Chief Administrative Law Judge determines that the claimant or other individual poses a reasonable threat to the safety of our employees or other participants in the

hearing, the Hearing Office Chief Administrative Law Judge will either:

(i) Require the presence of a security guard at the hearing; or

(ii) Require that the hearing be conducted by video teleconference or by telephone.

(c) If we have banned a claimant from any of our facilities, we will provide the claimant with the opportunity for a hearing that will be conducted by telephone.

(d) The actions of the Hearing Office Chief Administrative Law Judge taken under this section are final and not subject to further review.

[76 FR 13508, Mar. 14, 2011, as amended at 77 FR 10658, Feb. 23, 2012]

§ 404.938 Notice of a hearing before an administrative law judge.

(a) *Issuing the notice.* After we set the time and place of the hearing, we will mail notice of the hearing to you at your last known address, or give the notice to you by personal service, unless you have indicated in writing that you do not wish to receive this notice. The notice will be mailed or served at least 20 days before the hearing.

(b) *Notice information.* The notice of hearing will contain a statement of the specific issues to be decided and tell you that you may designate a person to represent you during the proceedings. The notice will also contain an explanation of the procedures for requesting a change in the time or place of your hearing, a reminder that if you fail to appear at your scheduled hearing without good cause the administrative law judge may dismiss your hearing request, and other information about the scheduling and conduct of your hearing. You will also be told if your appearance or that of any other party or witness is scheduled to be made in person, by video teleconferencing, or by telephone. If we have scheduled you to appear at the hearing by video teleconferencing, the notice of hearing will tell you that the scheduled place for the hearing is a video teleconferencing site and explain what it means to appear at your hearing by video teleconferencing.

(c) *Acknowledging the notice of hearing.* The notice of hearing will ask you to return a form to let us know that you received the notice. If you or your representative do not acknowledge receipt of the notice of hearing, we will attempt to contact you for an explanation. If you tell us that you did not receive the notice of hearing, an amended notice will be sent to you by certified mail. *See* § 404.936 for the procedures we will follow in deciding whether the time or place of your scheduled hearing will be changed if you do not respond to the notice of hearing.

[68 FR 5219, Feb. 3, 2003, as amended at 75 FR 39160, July 8, 2010; 78 FR 29627, May 21, 2013; 79 FR 35932, June 25, 2014]

§ 404.939 Objections to the issues.

If you object to the issues to be decided upon at the hearing, you must notify the administrative law judge in writing at the earliest possible opportunity before the time set for the hearing. You must state the reasons for your objections. The administrative law judge shall make a decision on your objections either in writing or at the hearing.

§ 404.940 Disqualification of the administrative law judge.

An administrative law judge shall not conduct a hearing if he or she is prejudiced or partial with respect to any party or has any interest in the matter pending for decision. If you object to the administrative law judge who will conduct the hearing, you must notify the administrative law judge at your earliest opportunity. The administrative law judge shall consider your objections and shall decide whether to proceed with the hearing or withdraw. If he or she withdraws, the Associate Commissioner for Hearings and Appeals, or his or her delegate, will appoint another administrative law judge to conduct the hearing. If the administrative law judge does not withdraw, you may, after the hearing, present your objections to the Appeals Council as reasons why the hearing decision should be revised or a new hearing held before another administrative law judge.

§ 404.941 Prehearing case review.

(a) *General.* After a hearing is requested but before it is held, we may,

for the purposes of a prehearing case review, forward the case to the component of our office (including a State agency) that issued the determination being reviewed. That component will decide whether it should revise the determination based on the preponderance of the evidence. A revised determination may be fully or partially favorable to you. A prehearing case review will not delay the scheduling of a hearing unless you agree to continue the review and delay the hearing. If the prehearing case review is not completed before the date of the hearing, the case will be sent to the administrative law judge unless a favorable revised determination is in process or you and the other parties to the hearing agree in writing to delay the hearing until the review is completed.

(b) *When a prehearing case review may be conducted.* We may conduct a prehearing case review if—

(1) Additional evidence is submitted;

(2) There is an indication that additional evidence is available;

(3) There is a change in the law or regulation; or

(4) There is an error in the file or some other indication that the prior determination may be revised.

(c) *Notice of a prehearing revised determination.* If we revise the determination in a prehearing case review, we will mail a written notice of the revised determination to all parties at their last known addresses. We will state the basis for the revised determination and advise all parties of the effect of the revised determination on the request for a hearing.

(d) *Effect of a fully favorable revised determination.* If the revised determination is fully favorable to you, we will tell you in the notice that an administrative law judge will dismiss the request for a hearing. We will also tell you that you or another party to the hearing may request that the administrative law judge vacate the dismissal and reinstate the request for a hearing if you or another party to the hearing disagrees with the revised determination for any reason. If you wish to make this request, you must do so in writing and send it to us within 60 days of the date you receive notice of the dismissal. If the request is timely, an administrative law judge will vacate the dismissal, reinstate the request for hearing, and offer you and all parties an opportunity for a hearing. The administrative law judge will extend the time limit if you show that you had good cause for missing the deadline. The administrative law judge will use the standards in § 404.911 to determine whether you had good cause.

(e) *Effect of a partially favorable revised determination.* If the revised determination is partially favorable to you, we will tell you in the notice what was not favorable. We will also tell you that an administrative law judge will hold the hearing you requested unless you and all other parties to the hearing agree in writing to dismiss the request for a hearing. An administrative law judge will dismiss the request for a hearing if we receive the written statement(s) agreeing to dismiss the request for a hearing before an administrative law judge mails a notice of his or her hearing decision.

[45 FR 52081, Aug. 5, 1980, as amended at 73 FR 76943, Dec. 18, 2008; 75 FR 33168, June 11, 2010; 76 FR 65369, Oct. 21, 2011]

§ 404.942 Prehearing proceedings and decisions by attorney advisors.

(a) *General.* After a hearing is requested but before it is held, an attorney advisor may conduct prehearing proceedings as set out in paragraph (c) of this section. If after the completion of these proceedings we can make a decision that is fully favorable to you and all other parties based on the preponderance of the evidence, an attorney advisor, instead of an administrative law judge, may issue the decision. The conduct of the prehearing proceedings by the attorney advisor will not delay the scheduling of a hearing. If the prehearing proceedings are not completed before the date of the hearing, the case will be sent to the administrative law judge unless a fully favorable decision is in process or you and all other parties to the hearing agree in writing to delay the hearing until the proceedings are completed.

(b) *When prehearing proceedings may be conducted by an attorney advisor.* An attorney advisor may conduct prehearing proceedings if you have filed a

claim for benefits based on disability and—

(1) New and material evidence is submitted;

(2) There is an indication that additional evidence is available;

(3) There is a change in the law or regulations; or

(4) There is an error in the file or some other indication that a fully favorable decision may be issued.

(c) *Nature of the prehearing proceedings that may be conducted by an attorney advisor.* As part of the prehearing proceedings, the attorney advisor, in addition to reviewing the existing record, may—

(1) Request additional evidence that may be relevant to the claim, including medical evidence; and

(2) If necessary to clarify the record for the purpose of determining if a fully favorable decision is warranted, schedule a conference with the parties.

(d) *Notice of a decision by an attorney advisor.* If an attorney advisor issues a fully favorable decision under this section, we will mail a written notice of the decision to all parties at their last known addresses. We will state the basis for the decision and advise all parties that they may request that an administrative law judge reinstate the request for a hearing if they disagree with the decision for any reason. Any party who wants to make this request must do so in writing and send it to us within 60 days of the date he or she receives notice of the decision. The administrative law judge will extend the time limit if the requestor shows good cause for missing the deadline. The administrative law judge will use the standards in § 404.911 to determine whether there is good cause. If the request is timely, an administrative law judge will reinstate the request for a hearing and offer all parties an opportunity for a hearing.

(e) *Effect of an attorney advisor's decision.* An attorney advisor's decision under this section is binding unless—

(1) You or another party to the hearing submits a timely request that an administrative law judge reinstate the request for a hearing under paragraph (d) of this section;

(2) The Appeals Council reviews the decision on its own motion pursuant to § 404.969 as explained in paragraph (f)(3) of this section; or

(3) The decision of the attorney advisor is revised under the procedures explained in § 404.987.

(f) *Ancillary provisions.* For the purposes of the procedures authorized by this section, the regulations of part 404 shall apply to—

(1) Authorize an attorney advisor to exercise the functions performed by an administrative law judge under §§ 404.1520a, 404.1526, 404.1527, and 404.1546.

(2) Define the term ''decision'' to include a decision made by an attorney advisor, as well as the decisions identified in § 404.901; and

(3) Make the decision of an attorney advisor under paragraph (d) of this section subject to review by the Appeals Council if the Appeals Council decides to review the decision of the attorney advisor anytime within 60 days after the date of the decision under § 404.969.

(g) *Sunset provision.* The provisions of this section will no longer be effective on August 7, 2015, unless we terminate them earlier or extend them beyond that date by notice of a final rule in the FEDERAL REGISTER.

[60 FR 34131, June 30, 1995, as amended at 63 FR 35516, June 30, 1998; 64 FR 13678, Mar. 22, 1999; 64 FR 51893, Sept. 27, 1999; 72 FR 44765, Aug. 9, 2007; 73 FR 76944, Dec. 18, 2008; 74 FR 33328, July 13, 2009; 76 FR 18384, Apr. 4, 2011; 76 FR 65370, Oct. 21, 2011; 78 FR 45460, July 29, 2013]

§ 404.943 Responsibilities of the adjudication officer.

(a)(1) *General.* Under the procedures set out in this section we will test modifications to the procedures we follow when you file a request for a hearing before an administrative law judge in connection with a claim for benefits based on disability where the question of whether you are under a disability as defined in § 404.1505 is at issue. These modifications will enable us to test the effect of having an adjudication officer be your primary point of contact after you file a hearing request and before you have a hearing with an administrative law judge. The tests may be conducted alone, or in combination with the tests of the modifications to the disability determination procedures

which we conduct under § 404.906. The adjudication officer, working with you and your representative, if any, will identify issues in dispute, develop evidence, conduct informal conferences, and conduct any other prehearing proceeding as may be necessary. The adjudication officer has the authority to make a decision fully favorable to you if the evidence so warrants. If the adjudication officer does not make a decision on your claim, your hearing request will be assigned to an administrative law judge for further proceedings.

(2) *Procedures for cases included in the tests.* Prior to commencing tests of the adjudication officer position in selected site(s), we will publish a notice in the FEDERAL REGISTER. The notice will describe where the specific test site(s) will be and the duration of the test(s). We will also state whether the tests of the adjudication officer position in each site will be conducted alone, or in combination with the tests of the modifications to the disability determination procedures which we conduct under § 404.906. The individuals who participate in the test(s) will be assigned randomly to a test group in each site where the tests are conducted.

(b)(1) *Prehearing procedures conducted by an Adjudication Officer.* When you file a request for a hearing before an administrative law judge in connection with a claim for benefits based on disability where the question of whether you are under a disability as defined in § 404.1505 is at issue, the adjudication officer will conduct an interview with you. The interview may take place in person, by telephone, or by videoconference, as the adjudication officer determines is appropriate under the circumstances of your case. If you file a request for an extension of time to request a hearing in accordance with § 404.933(c), the adjudication officer may develop information on, and may decide where the adjudication officer issues a fully favorable decision to you that you had good cause for missing the deadline for requesting a hearing. To determine whether you had good cause for missing the deadline, the adjudication officer will use the standards contained in § 404.911.

(2) *Representation.* The adjudication officer will provide you with information regarding the hearing process, including your right to representation. As may be appropriate, the adjudication officer will provide you with referral sources for representation, and give you copies of necessary documents to facilitate the appointment of a representative. If you have a representative, the adjudication officer will conduct an informal conference with the representative, in person or by telephone, to identify the issues in dispute and prepare proposed written agreements for the approval of the administrative law judge regarding those issues which are not in dispute and those issues proposed for the hearing. If you decide to proceed without representation, the adjudication officer may hold an informal conference with you. If you obtain representation after the adjudication officer has concluded that your case is ready for a hearing, the administrative law judge will return your case to the adjudication officer who will conduct an informal conference with you and your representative.

(3) *Evidence.* You, or your representative, may submit, or may be asked to obtain and submit, additional evidence to the adjudication officer. As the adjudication officer determines is appropriate under the circumstances of your case, the adjudication officer may refer the claim for further medical or vocational evidence.

(4) *Referral for a hearing.* The adjudication officer will refer the claim to the administrative law judge for further proceedings when the development of evidence is complete, and you or your representative agree that a hearing is ready to be held. If you or your representative are unable to agree with the adjudication officer that the development of evidence is complete, the adjudication officer will note your disagreement and refer the claim to the administrative law judge for further proceedings. At this point, the administrative law judge conducts all further hearing proceedings, including scheduling and holding a hearing (§ 404.936), considering any additional evidence or arguments submitted (§§ 404.935, 404.944, 404.949, 404.950), and issuing a decision

or dismissal of your request for a hearing, as may be appropriate (§§ 404.948, 404.953, 404.957). In addition, if the administrative law judge determines on or before the date of your hearing that the development of evidence is not complete, the administrative law judge may return the claim to the adjudication officer to complete the development of the evidence and for such other action as necessary.

(c)(1) *Fully favorable decisions issued by an adjudication officer*. If, after a hearing is requested but before it is held, the adjudication officer decides that the evidence in your case warrants a decision which is fully favorable to you, the adjudication officer may issue such a decision. For purposes of the tests authorized under this section, the adjudication officer's decision shall be considered to be a decision as defined in § 404.901. If the adjudication officer issues a decision under this section, it will be in writing and will give the findings of fact and the reasons for the decision. The adjudication officer will evaluate the issues relevant to determining whether or not you are disabled in accordance with the provisions of the Social Security Act, the rules in this part and part 422 of this chapter and applicable Social Security Rulings. For cases in which the adjudication officer issues a decision, he or she may determine your residual functional capacity in the same manner that an administrative law judge is authorized to do so in § 404.1546. The adjudication officer may also evaluate the severity of your mental impairments in the same manner that an administrative law judge is authorized to do so under § 404.1520a. The adjudication officer's decision will be based on the evidence which is included in the record and, subject to paragraph (c)(2) of this section, will complete the actions that will be taken on your request for hearing. A copy of the decision will be mailed to all parties at their last known address. We will tell you in the notice that the administrative law judge will not hold a hearing unless a party to the hearing requests that the hearing proceed. A request to proceed with the hearing must be made in writing within 30 days after the date the notice of the decision of the adjudication officer is mailed.

(2) *Effect of a decision by an adjudication officer*. A decision by an adjudication officer which is fully favorable to you under this section, and notification thereof, completes the administrative action on your request for hearing and is binding on all parties to the hearing and not subject to further review, unless—

(i) You or another party requests that the hearing continue, as provided in paragraph (c)(1) of this section;

(ii) The Appeals Council decides to review the decision on its own motion under the authority provided in § 404.969;

(iii) The decision is revised under the procedures explained in §§ 404.987 through 404.989; or

(iv) In a case remanded by a Federal court, the Appeals Council assumes jurisdiction under the procedures in § 404.984.

(3) *Fee for a representative's services*. The adjudication officer may authorize a fee for your representative's services if the adjudication officer makes a decision on your claim that is fully favorable to you, and you are represented. The actions of, and any fee authorization made by, the adjudication officer with respect to representation will be made in accordance with the provisions of subpart R of this part.

(d) *Who may be an adjudication officer*. The adjudication officer described in this section may be an employee of the Social Security Administration or a State agency that makes disability determinations for us.

[60 FR 47475, Sept. 13, 1995, as amended at 75 FR 33168, June 11, 2010]

ADMINISTRATIVE LAW JUDGE HEARING PROCEDURES

§ 404.944 Administrative law judge hearing procedures—general.

A hearing is open to the parties and to other persons the administrative law judge considers necessary and proper. At the hearing, the administrative law judge looks fully into the issues, questions you and the other witnesses, and accepts as evidence any documents that are material to the issues. The administrative law judge

may stop the hearing temporarily and continue it at a later date if he or she believes that there is material evidence missing at the hearing. The administrative law judge may also reopen the hearing at any time before he or she mails a notice of the decision in order to receive new and material evidence. The administrative law judge may decide when the evidence will be presented and when the issues will be discussed.

[45 FR 52081, Aug. 5, 1980, as amended at 51 FR 303, Jan. 3, 1986]

§ 404.946 Issues before an administrative law judge.

(a) *General.* The issues before the administrative law judge include all the issues brought out in the initial, reconsidered or revised determination that were not decided entirely in your favor. However, if evidence presented before or during the hearing causes the administrative law judge to question a fully favorable determination, he or she will notify you and will consider it an issue at the hearing.

(b) *New issues*—(1) *General.* The administrative law judge may consider a new issue at the hearing if he or she notifies you and all the parties about the new issue any time after receiving the hearing request and before mailing notice of the hearing decision. The administrative law judge or any party may raise a new issue; an issue may be raised even though it arose after the request for a hearing and even though it has not been considered in an initial or reconsidered determination. However, it may not be raised if it involves a claim that is within the jurisdiction of a State agency under a Federal-State agreement concerning the determination of disability.

(2) *Notice of a new issue.* The administrative law judge shall notify you and any other party if he or she will consider any new issue. Notice of the time and place of the hearing on any new issues will be given in the manner described in § 404.938, unless you have indicated in writing that you do not wish to receive the notice.

[45 FR 52081, Aug. 5, 1980, as amended at 51 FR 303, Jan. 3, 1986]

§ 404.948 Deciding a case without an oral hearing before an administrative law judge.

(a) *Decision fully favorable.* If the evidence in the hearing record supports a finding in favor of you and all the parties on every issue, the administrative law judge may issue a hearing decision based on a preponderance of the evidence without holding an oral hearing. The notice of the decision will state that you have the right to an oral hearing and to examine the evidence on which the administrative law judge based the decision.

(b) *Parties do not wish to appear.* (1) The administrative law judge may decide a case on the record and not conduct an oral hearing if—

(i) You and all the parties indicate in writing that you do not wish to appear before the administrative law judge at an oral hearing; or

(ii) You live outside the United States, you do not inform us that you wish to appear, and there are no other parties who wish to appear.

(2) When an oral hearing is not held, the administrative law judge shall make a record of the material evidence. The record will include the applications, written statements, certificates, reports, affidavits, and other documents that were used in making the determination under review and any additional evidence you or any other party to the hearing present in writing. The decision of the administrative law judge must be based on this record.

(c) *Case remanded for a revised determination.* (1) The administrative law judge may remand a case to the appropriate component of our office for a revised determination if there is reason to believe that the revised determination would be fully favorable to you. This could happen if the administrative law judge receives new and material evidence or if there is a change in the law that permits the favorable determination.

(2) Unless you request the remand, the administrative law judge shall notify you that your case has been remanded and tell you that if you object, you must notify him or her of your objections within 10 days of the date the case is remanded or we will assume

that you agree to the remand. If you object to the remand, the administrative law judge will consider the objection and rule on it in writing.

[45 FR 52081, Aug. 5, 1980, as amended at 51 FR 303, Jan. 3, 1986; 73 FR 76944, Dec. 18, 2008; 75 FR 33168, June 11, 2010; 76 FR 65370, Oct. 21, 2011]

§ 404.949 Presenting written statements and oral arguments.

You or a person you designate to act as your representative may appear before the administrative law judge to state your case, to present a written summary of your case, or to enter written statements about the facts and law material to your case in the record. A copy of your written statements should be filed for each party.

§ 404.950 Presenting evidence at a hearing before an administrative law judge.

(a) *The right to appear and present evidence.* Any party to a hearing has a right to appear before the administrative law judge, either in person, or, when the conditions in § 404.936(c)(1) exist, by video teleconferencing or telephone, to present evidence and to state his or her position. A party may also make his or her appearance by means of a designated representative, who may make the appearance in person, or, when the conditions in § 404.936(c)(1) exist, by video teleconferencing or telephone.

(b) *Waiver of the right to appear.* You may send the administrative law judge a waiver or a written statement indicating that you do not wish to appear at the hearing. You may withdraw this waiver any time before a notice of the hearing decision is mailed to you. Even if all of the parties waive their right to appear at a hearing, we may notify them of a time and a place for an oral hearing, if the administrative law judge believes that a personal appearance and testimony by you or any other party is necessary to decide the case.

(c) *What evidence is admissible at a hearing.* The administrative law judge may receive evidence at the hearing even though the evidence would not be admissible in court under the rules of evidence used by the court.

(d) *Subpoenas.* (1) When it is reasonably necessary for the full presentation of a case, an administrative law judge or a member of the Appeals Council may, on his or her own initiative or at the request of a party, issue subpoenas for the appearance and testimony of witnesses and for the production of books, records, correspondence, papers, or other documents that are material to an issue at the hearing.

(2) Parties to a hearing who wish to subpoena documents or witnesses must file a written request for the issuance of a subpoena with the administrative law judge or at one of our offices at least 5 days before the hearing date. The written request must give the names of the witnesses or documents to be produced; describe the address or location of the witnesses or documents with sufficient detail to find them; state the important facts that the witness or document is expected to prove; and indicate why these facts could not be proven without issuing a subpoena.

(3) We will pay the cost of issuing the subpoena.

(4) We will pay subpoenaed witnesses the same fees and mileage they would receive if they had been subpoenaed by a Federal district court.

(e) *Witnesses at a hearing.* Witnesses may appear at a hearing in person or, when the conditions in § 404.936(c)(2) exist, by video teleconferencing or telephone. They will testify under oath or affirmation unless the administrative law judge finds an important reason to excuse them from taking an oath or affirmation. The administrative law judge may ask the witness any questions material to the issues and will allow the parties or their designated representatives to do so.

(f) *Collateral estoppel—issues previously decided.* An issue at your hearing may be a fact that has already been decided in one of our previous determinations or decisions in a claim involving the same parties, but arising under a different title of the Act or under the Federal Coal Mine Health and Safety Act. If this happens, the administrative law judge will not consider the issue again, but will accept the factual finding made in the previous determination

or decision unless there are reasons to believe that it was wrong.

[45 FR 52081, Aug. 5, 1980, as amended at 51 FR 303, Jan. 3, 1986; 68 FR 5219, Feb. 3, 2003; 75 FR 39160, July 8, 2010; 78 FR 29627, May 21, 2013]

§ 404.951 When a record of a hearing before an administrative law judge is made.

The administrative law judge shall make a complete record of the hearing proceedings. The record will be prepared as a typed copy of the proceedings if—

(a) The case is sent to the Appeals Council without a decision or with a recommended decision by the administrative law judge;

(b) You seek judicial review of your case by filing an action in a Federal district court within the stated time period, unless we request the court to remand the case; or

(c) An administrative law judge or the Appeals Council asks for a written record of the proceedings.

[45 FR 52081, Aug. 5, 1980, as amended at 51 FR 303, Jan. 3, 1986]

§ 404.952 Consolidated hearing before an administrative law judge.

(a) *General.* (1) A consolidated hearing may be held if—

(i) You have requested a hearing to decide your benefit rights under title II of the Act and you have also requested a hearing to decide your rights under another law we administer; and

(ii) One or more of the issues to be considered at the hearing you requested are the same issues that are involved in another claim you have pending before us.

(2) If the administrative law judge decides to hold the hearing on both claims, he or she decides both claims, even if we have not yet made an initial or reconsidered determination on the other claim.

(b) *Record, evidence, and decision.* There will be a single record at a consolidated hearing. This means that the evidence introduced in one case becomes evidence in the other(s). The administrative law judge may make either a separate or consolidated decision.

[45 FR 52081, Aug. 5, 1980, as amended at 51 FR 303, Jan. 3, 1986]

§ 404.953 The decision of an administrative law judge.

(a) *General.* The administrative law judge shall issue a written decision that gives the findings of fact and the reasons for the decision. The administrative law judge must base the decision on the preponderance of the evidence offered at the hearing or otherwise included in the record. The administrative law judge shall mail a copy of the decision to all the parties at their last known address. The Appeals Council may also receive a copy of the decision.

(b) *Fully favorable oral decision entered into the record at the hearing.* The administrative law judge may enter a fully favorable oral decision based on the preponderance of the evidence into the record of the hearing proceedings. If the administrative law judge enters a fully favorable oral decision into the record of the hearing proceedings, the administrative law judge may issue a written decision that incorporates the oral decision by reference. The administrative law judge may use this procedure only in those categories of cases that we identify in advance. The administrative law judge may only use this procedure in those cases where the administrative law judge determines that no changes are required in the findings of fact or the reasons for the decision as stated at the hearing. If a fully favorable decision is entered into the record at the hearing, the administrative law judge will also include in the record, as an exhibit entered into the record at the hearing, a document that sets forth the key data, findings of fact, and narrative rationale for the decision. If the decision incorporates by reference the findings and the reasons stated in an oral decision at the hearing, the parties shall also be provided, upon written request, a record of the oral decision.

(c) *Recommended decision.* Although an administrative law judge will usually make a decision, the administrative law judge may send the case to the Appeals Council with a recommended

decision based on a preponderance of the evidence when appropriate. The administrative law judge will mail a copy of the recommended decision to the parties at their last known addresses and send the recommended decision to the Appeals Council.

[45 FR 52081, Aug. 5, 1980, as amended at 51 FR 303, Jan. 3, 1986; 54 FR 37792, Sept. 13, 1989; 69 FR 61597, Oct. 20, 2004; 73 FR 76944, Dec. 18, 2008; 75 FR 33168, June 11, 2010]

§ 404.955 The effect of an administrative law judge's decision.

The decision of the administrative law judge is binding on all parties to the hearing unless—

(a) You or another party request a review of the decision by the Appeals Council within the stated time period, and the Appeals Council reviews your case;

(b) You or another party requests a review of the decision by the Appeals Council within the stated time period, the Appeals Council denies your request for review, and you seek judicial review of your case by filing an action in a Federal district court;

(c) The decision is revised by an administrative law judge or the Appeals Council under the procedures explained in § 404.987;

(d) The expedited appeals process is used;

(e) The decision is a recommended decision directed to the Appeals Council; or

(f) In a case remanded by a Federal court, the Appeals Council assumes jurisdiction under the procedures in § 404.984.

[45 FR 52081, Aug. 5, 1980, as amended at 51 FR 303, Jan. 3, 1986; 54 FR 37792, Sept. 13, 1989]

§ 404.956 Removal of a hearing request from an administrative law judge to the Appeals Council.

If you have requested a hearing and the request is pending before an administrative law judge, the Appeals Council may assume responsibility for holding a hearing by requesting that the administrative law judge send the hearing request to it. If the Appeals Council holds a hearing, it shall conduct the hearing according to the rules for hearings before an administrative law judge. Notice shall be mailed to all parties at their last known address telling them that the Appeals Council has assumed responsibility for the case.

[45 FR 52081, Aug. 5, 1980, as amended at 51 FR 303, Jan. 3, 1986]

§ 404.957 Dismissal of a request for a hearing before an administrative law judge.

An administrative law judge may dismiss a request for a hearing under any of the following conditions:

(a) At any time before notice of the hearing decision is mailed, you or the party or parties that requested the hearing ask to withdraw the request. This request may be submitted in writing to the administrative law judge or made orally at the hearing.

(b)(1)(i) Neither you nor the person you designate to act as your representative appears at the time and place set for the hearing and you have been notified before the time set for the hearing that your request for hearing may be dismissed without further notice if you did not appear at the time and place of hearing, and good cause has not been found by the administrative law judge for your failure to appear; or

(ii) Neither you nor the person you designate to act as your representative appears at the time and place set for the hearing and within 10 days after the administrative law judge mails you a notice asking why you did not appear, you do not give a good reason for the failure to appear.

(2) In determining good cause or good reason under this paragraph, we will consider any physical, mental, educational, or linguistic limitations (including any lack of facility with the English language) which you may have.

(c) The administrative law judge decides that there is cause to dismiss a hearing request entirely or to refuse to consider any one or more of the issues because—

(1) The doctrine of *res judicata* applies in that we have made a previous determination or decision under this subpart about your rights on the same facts and on the same issue or issues, and this previous determination or decision has become final by either administrative or judicial action;

(2) The person requesting a hearing has no right to it under § 404.930;

(3) You did not request a hearing within the stated time period and we have not extended the time for requesting a hearing under § 404.933(c); or

(4) You die, there are no other parties, and we have no information to show that another person may be adversely affected by the determination that was to be reviewed at the hearing. However, dismissal of the hearing request will be vacated if, within 60 days after the date of the dismissal, another person submits a written request for a hearing on the claim and shows that he or she may be adversely affected by the determination that was to be reviewed at the hearing.

[45 FR 52081, Aug. 5, 1980, as amended at 50 FR 21438, May 24, 1985; 51 FR 303, Jan. 3, 1986; 59 FR 1634, Jan. 12, 1994]

§ 404.958 Notice of dismissal of a request for a hearing before an administrative law judge.

We shall mail a written notice of the dismissal of the hearing request to all parties at their last known address. The notice will state that there is a right to request that the Appeals Council vacate the dismissal action.

[45 FR 52081, Aug. 5, 1980, as amended at 51 FR 303, Jan. 3, 1986]

§ 404.959 Effect of dismissal of a request for a hearing before an administrative law judge.

The dismissal of a request for a hearing is binding, unless it is vacated by an administrative law judge or the Appeals Council.

[45 FR 52081, Aug. 5, 1980, as amended at 51 FR 303, Jan. 3, 1986]

§ 404.960 Vacating a dismissal of a request for a hearing before an administrative law judge.

(a) Except as provided in paragraph (b) of this section, an administrative law judge or the Appeals Council may vacate a dismissal of a request for a hearing if you request that we vacate the dismissal. If you or another party wish to make this request, you must do so within 60 days of the date you receive notice of the dismissal, and you must state why our dismissal of your request for a hearing was erroneous. The administrative law judge or Appeals Council will inform you in writing of the action taken on your request. The Appeals Council may also vacate a dismissal of a request for a hearing on its own motion. If the Appeals Council decides to vacate a dismissal on its own motion, it will do so within 60 days of the date we mail the notice of dismissal and will inform you in writing that it vacated the dismissal.

(b) If you wish to proceed with a hearing after you received a fully favorable revised determination under the prehearing case review process in § 404.941, you must follow the procedures in § 404.941(d) to request that an administrative law judge vacate his or her order dismissing your request for a hearing.

[76 FR 65370, Oct. 21, 2011]

§ 404.961 Prehearing and posthearing conferences.

The administrative law judge may decide on his or her own, or at the request of any party to the hearing, to hold a prehearing or posthearing conference to facilitate the hearing or the hearing decision. The administrative law judge shall tell the parties of the time, place and purpose of the conference at least seven days before the conference date, unless the parties have indicated in writing that they do not wish to receive a written notice of the conference. At the conference, the administrative law judge may consider matters in addition to those stated in the notice, if the parties consent in writing. A record of the conference will be made. The administrative law judge shall issue an order stating all agreements and actions resulting from the conference. If the parties do not object, the agreements and actions become part of the hearing record and are binding on all parties.

§ 404.965 [Reserved]

APPEALS COUNCIL REVIEW

§ 404.966 Testing elimination of the request for Appeals Council review.

(a) *Applicability and scope.* Notwithstanding any other provision in this part or part 422 of this chapter, we are

establishing the procedures set out in this section to test elimination of the request for review by the Appeals Council. These procedures will apply in randomly selected cases in which we have tested a combination of model procedures for modifying the disability claim process as authorized under §§ 404.906 and 404.943, and in which an administrative law judge has issued a decision (not including a recommended decision) that is less than fully favorable to you.

(b) *Effect of an administrative law judge's decision.* In a case to which the procedures of this section apply, the decision of an administrative law judge will be binding on all the parties to the hearing unless—

(1) You or another party file an action concerning the decision in Federal district court;

(2) The Appeals Council decides to review the decision on its own motion under the authority provided in § 404.969, and it issues a notice announcing its decision to review the case on its own motion no later than the day before the filing date of a civil action establishing the jurisdiction of a Federal district court; or

(3) The decision is revised by the administrative law judge or the Appeals Council under the procedures explained in § 404.987.

(c) *Notice of the decision of an administrative law judge.* The notice of decision the administrative law judge issues in a case processed under this section will advise you and any other parties to the decision that you may file an action in a Federal district court within 60 days after the date you receive notice of the decision.

(d) *Extension of time to file action in Federal district court.* Any party having a right to file a civil action under this section may request that the time for filing an action in Federal district court be extended. The request must be in writing and it must give the reasons why the action was not filed within the stated time period. The request must be filed with the Appeals Council. If you show that you had good cause for missing the deadline, the time period will be extended. To determine whether good cause exists, we will use the standards in § 404.911.

[62 FR 49602, Sept. 23, 1997, as amended at 75 FR 33168, June 11, 2010]

§ 404.967 Appeals Council review—general.

If you or any other party is dissatisfied with the hearing decision or with the dismissal of a hearing request, you may request that the Appeals Council review that action. The Appeals Council may deny or dismiss the request for review, or it may grant the request and either issue a decision or remand the case to an administrative law judge. The Appeals Council shall notify the parties at their last known address of the action it takes.

§ 404.968 How to request Appeals Council review.

(a) *Time and place to request Appeals Council review.* You may request Appeals Council review by filing a written request. Any documents or other evidence you wish to have considered by the Appeals Council should be submitted with your request for review. You may file your request—

(1) Within 60 days after the date you receive notice of the hearing decision or dismissal (or within the extended time period if we extend the time as provided in paragraph (b) of this section);

(2) At one of our offices, the Veterans Administration Regional Office in the Philippines, or an office of the Railroad Retirement Board if you have 10 or more years of service in the railroad industry.

(b) *Extension of time to request review.* You or any party to a hearing decision may ask that the time for filing a request for the review be extended. The request for an extension of time must be in writing. It must be filed with the Appeals Council, and it must give the reasons why the request for review was not filed within the stated time period. If you show that you had good cause for missing the deadline, the time period will be extended. To determine whether good cause exists, we use the standards explained in § 404.911.

§ 404.969 Appeals Council initiates review.

(a) *General.* Anytime within 60 days after the date of a decision or dismissal that is subject to review under this section, the Appeals Council may decide on its own motion to review the action that was taken in your case. We may refer your case to the Appeals Council for it to consider reviewing under this authority.

(b) *Identification of cases.* We will identify a case for referral to the Appeals Council for possible review under its own-motion authority before we effectuate a decision in the case. We will identify cases for referral to the Appeals Council through random and selective sampling techniques, which we may use in association with examination of the cases identified by sampling. We will also identify cases for referral to the Appeals Council through the evaluation of cases we conduct in order to effectuate decisions.

(1) *Random and selective sampling and case examinations.* We may use random and selective sampling to identify cases involving any type of action (*i.e.*, fully or partially favorable decisions, unfavorable decisions, or dismissals) and any type of benefits (*i.e.*, benefits based on disability and benefits not based on disability). We will use selective sampling to identify cases that exhibit problematic issues or fact patterns that increase the likelihood of error. Neither our random sampling procedures nor our selective sampling procedures will identify cases based on the identity of the decisionmaker or the identity of the office issuing the decision. We may examine cases that have been identified through random or selective sampling to refine the identification of cases that may meet the criteria for review by the Appeals Council.

(2) *Identification as a result of the effectuation process.* We may refer a case requiring effectuation to the Appeals Council if, in the view of the effectuating component, the decision cannot be effectuated because it contains a clerical error affecting the outcome of the claim; the decision is clearly inconsistent with the Social Security Act, the regulations, or a published ruling; or the decision is unclear regarding a matter that affects the claim's outcome.

(c) *Referral of cases.* We will make referrals that occur as the result of a case examination or the effectuation process in writing. The written referral based on the results of such a case examination or the effectuation process will state the referring component's reasons for believing that the Appeals Council should review the case on its own motion. Referrals that result from selective sampling without a case examination may be accompanied by a written statement identifying the issue(s) or fact pattern that caused the referral. Referrals that result from random sampling without a case examination will only identify the case as a random sample case.

(d) *Appeals Council's action.* If the Appeals Council decides to review a decision or dismissal on its own motion, it will mail a notice of review to all the parties as provided in § 404.973. The Appeals Council will include with that notice a copy of any written referral it has received under paragraph (c) of this section. The Appeals Council's decision to review a case is established by its issuance of the notice of review. If it is unable to decide within the applicable 60-day period whether to review a decision or dismissal, the Appeals Council may consider the case to determine if the decision or dismissal should be reopened pursuant to §§ 404.987 and 404.988. If the Appeals Council decides to review a decision on its own motion or to reopen a decision as provided in §§ 404.987 and 404.988, the notice of review or the notice of reopening issued by the Appeals Council will advise, where appropriate, that interim benefits will be payable if a final decision has not been issued within 110 days after the date of the decision that is reviewed or reopened, and that any interim benefits paid will not be considered overpayments unless the benefits are fraudulently obtained.

[63 FR 36570, July 7, 1998, as amended at 75 FR 33168, June 11, 2010]

§ 404.970 Cases the Appeals Council will review.

(a) The Appeals Council will review a case if—

(1) There appears to be an abuse of discretion by the administrative law judge;

(2) There is an error of law;

(3) The action, findings or conclusions of the administrative law judge are not supported by substantial evidence; or

(4) There is a broad policy or procedural issue that may affect the general public interest.

(b) If new and material evidence is submitted, the Appeals Council shall consider the additional evidence only where it relates to the period on or before the date of the administrative law judge hearing decision. The Appeals Council shall evaluate the entire record including the new and material evidence submitted if it relates to the period on or before the date of the administrative law judge hearing decision. It will then review the case if it finds that the administrative law judge's action, findings, or conclusion is contrary to the weight of the evidence currently of record.

[45 FR 52081, Aug. 5, 1980, as amended at 52 FR 4004, Feb. 9, 1987]

§ 404.971 Dismissal by Appeals Council.

The Appeals Council will dismiss your request for review if you did not file your request within the stated period of time and the time for filing has not been extended. The Appeals Council may also dismiss any proceedings before it if—

(a) You and any other party to the proceedings files a written request for dismissal; or

(b) You or any other party to the proceedings dies and the record clearly shows that dismissal will not adversely affect any other person who wishes to continue the action.

§ 404.972 Effect of dismissal of request for Appeals Council review.

The dismissal of a request for Appeals Council review is binding and not subject to further review.

§ 404.973 Notice of Appeals Council review.

When the Appeals Council decides to review a case, it shall mail a notice to all parties at their last known address stating the reasons for the review and the issues to be considered.

§ 404.974 Obtaining evidence from Appeals Council.

You may request and receive copies or a statement of the documents or other written evidence upon which the hearing decision or dismissal was based and a copy or summary of the transcript of oral evidence. However, you will be asked to pay the costs of providing these copies unless there is a good reason why you should not pay.

§ 404.975 Filing briefs with the Appeals Council.

Upon request, the Appeals Council shall give you and all other parties a reasonable opportunity to file briefs or other written statements about the facts and law relevant to the case. A copy of each brief or statement should be filed for each party.

§ 404.976 Procedures before Appeals Council on review.

(a) *Limitation of issues.* The Appeals Council may limit the issues it considers if it notifies you and the other parties of the issues it will review.

(b) *Evidence.* (1) The Appeals Council will consider all the evidence in the administrative law judge hearing record as well as any new and material evidence submitted to it which relates to the period on or before the date of the administrative law judge hearing decision. If you submit evidence which does not relate to the period on or before the date of the administrative law judge hearing decision, the Appeals Council will return the additional evidence to you with an explanation as to why it did not accept the additional evidence and will advise you of your right to file a new application. The notice returning the evidence to you will also advise you that if you file a new application within 6 months after the date of the Appeals Council's notice, your request for review will constitute a written statement indicating an intent to claim benefits in accordance with § 404.630. If a new application is filed within 6 months of this notice, the date of the request for review will be used as the filing date for your application.

(2) If additional evidence is needed, the Appeals Council may remand the case to an administrative law judge to receive evidence and issue a new decision. However, if the Appeals Council decides that it can obtain the evidence more quickly, it may do so, unless it will adversely affect your rights.

(c) *Oral argument.* You may request to appear before the Appeals Council to present oral argument. The Appeals Council will grant your request if it decides that your case raises an important question of law or policy or that oral argument would help to reach a proper decision. If your request to appear is granted, the Appeals Council will tell you the time and place of the oral argument at least 10 days before the scheduled date.

[45 FR 52081, Aug. 5, 1980, as amended at 52 FR 4004, Feb. 9, 1987]

§ 404.977 Case remanded by Appeals Council.

(a) *When the Appeals Council may remand a case.* The Appeals Council may remand a case to an administrative law judge so that he or she may hold a hearing and issue a decision or a recommended decision. The Appeals Council may also remand a case in which additional evidence is needed or additional action by the administrative law judge is required.

(b) *Action by administrative law judge on remand.* The administrative law judge shall take any action that is ordered by the Appeals Council and may take any additional action that is not inconsistent with the Appeals Council's remand order.

(c) *Notice when case is returned with a recommended decision.* When the administrative law judge sends a case to the Appeals Council with a recommended decision, a notice is mailed to the parties at their last known address. The notice tells them that the case has been sent to the Appeals Council, explains the rules for filing briefs or other written statements with the Appeals Council, and includes a copy of the recommended decision.

(d) *Filing briefs with and obtaining evidence from the Appeals Council.* (1) You may file briefs or other written statements about the facts and law relevant to your case with the Appeals Council within 20 days of the date that the recommended decision is mailed to you. Any party may ask the Appeals Council for additional time to file briefs or statements. The Appeals Council will extend this period, as appropriate, if you show that you had good cause for missing the deadline.

(2) All other rules for filing briefs with and obtaining evidence from the Appeals Council follow the procedures explained in this subpart.

(e) *Procedures before the Appeals Council.* (1) The Appeals Council, after receiving a recommended decision, will conduct its proceedings and issue its decision according to the procedures explain in this subpart.

(2) If the Appeals Council believes that more evidence is required, it may again remand the case to an administrative law judge for further inquiry into the issues, rehearing, receipt of evidence, and another decision or recommended decision. However, if the Appeals Council decides that it can get the additional evidence more quickly, it will take appropriate action.

§ 404.979 Decision of Appeals Council.

After it has reviewed all the evidence in the administrative law judge hearing record and any additional evidence received, subject to the limitations on Appeals Council consideration of additional evidence in §§ 404.970(b) and 404.976(b), the Appeals Council will make a decision or remand the case to an administrative law judge. The Appeals Council may affirm, modify or reverse the administrative law judge hearing decision or it may adopt, modify or reject a recommended decision. If the Appeals Council issues its own decision, it will base its decision on the preponderance of the evidence. A copy of the Appeals Council's decision will be mailed to the parties at their last known address.

[52 FR 4004, Feb. 9, 1987, as amended at 73 FR 76944, Dec. 18, 2008]

§ 404.981 Effect of Appeals Council's decision or denial of review.

The Appeals Council may deny a party's request for review or it may decide to review a case and make a decision. The Appeals Council's decision, or the decision of the administrative law

judge if the request for review is denied, is binding unless you or another party file an action in Federal district court, or the decision is revised. You may file an action in a Federal district court within 60 days after the date you receive notice of the Appeals Council's action.

§ 404.982 Extension of time to file action in Federal district court.

Any party to the Appeals Council's decision or denial of review, or to an expedited appeals process agreement, may request that the time for filing an action in a Federal district court be extended. The request must be in writing and it must give the reasons why the action was not filed within the stated time period. The request must be filed with the Appeals Council, or if it concerns an expedited appeals process agreement, with one of our offices. If you show that you had good cause for missing the deadline, the time period will be extended. To determine whether good cause exists, we use the standards explained in § 404.911.

COURT REMAND CASES

§ 404.983 Case remanded by a Federal court.

When a Federal court remands a case to the Commissioner for further consideration, the Appeals Council, acting on behalf of the Commissioner, may make a decision, or it may remand the case to an administrative law judge with instructions to take action and issue a decision or return the case to the Appeals Council with a recommended decision. If the case is remanded by the Appeals Council, the procedures explained in § 404.977 will be followed. Any issues relating to your claim may be considered by the administrative law judge whether or not they were raised in the administrative proceedings leading to the final decision in your case.

[54 FR 37792, Sept. 13, 1989, as amended at 62 FR 38450, July 18, 1997]

§ 404.984 Appeals Council review of administrative law judge decision in a case remanded by a Federal court.

(a) *General.* In accordance with § 404.983, when a case is remanded by a Federal court for further consideration, the decision of the administrative law judge will become the final decision of the Commissioner after remand on your case unless the Appeals Council assumes jurisdiction of the case. The Appeals Council may assume jurisdiction based on written exceptions to the decision of the administrative law judge which you file with the Appeals Council or based on its authority pursuant to paragraph (c) of this section. If the Appeals Council assumes jurisdiction of your case, any issues relating to your claim may be considered by the Appeals Council whether or not they were raised in the administrative proceedings leading to the final decision in your case or subsequently considered by the administrative law judge in the administrative proceedings following the court's remand order. The Appeals Council will either make a new, independent decision based on the preponderance of the evidence in the record that will be the final decision of the Commissioner after remand, or it will remand the case to an administrative law judge for further proceedings.

(b) *You file exceptions disagreeing with the decision of the administrative law judge.* (1) If you disagree with the decision of the administrative law judge, in whole or in part, you may file exceptions to the decision with the Appeals Council. Exceptions may be filed by submitting a written statement to the Appeals Council setting forth your reasons for disagreeing with the decision of the administrative law judge. The exceptions must be filed within 30 days of the date you receive the decision of the administrative law judge or an extension of time in which to submit exceptions must be requested in writing within the 30-day period. A timely request for a 30-day extension will be granted by the Appeals Council. A request for an extension of more than 30 days should include a statement of reasons as to why you need the additional time.

(2) If written exceptions are timely filed, the Appeals Council will consider your reasons for disagreeing with the decision of the administrative law judge and all the issues presented by your case. If the Appeals Council concludes that there is no reason to change the decision of the administrative law judge, it will issue a notice to you addressing your exceptions and explaining why no change in the decision of the administrative law judge is warranted. In this instance, the decision of the administrative law judge is the final decision of the Commissioner after remand.

(3) When you file written exceptions to the decision of the administrative law judge, the Appeals Council may assume jurisdiction at any time, even after the 60-day time period which applies when you do not file exceptions. If the Appeals Council assumes jurisdiction, it will make a new, independent decision based on the preponderance of the evidence in the entire record affirming, modifying, or reversing the decision of the administrative law judge, or it will remand the case to an administrative law judge for further proceedings, including a new decision. The new decision of the Appeals Council is the final decision of the Commissioner after remand.

(c) *Appeals Council assumes jurisdiction without exceptions being filed.* Any time within 60 days after the date of the decision of the administrative law judge, the Appeals Council may decide to assume jurisdiction of your case even though no written exceptions have been filed. Notice of this action will be mailed to all parties at their last known address. You will be provided with the opportunity to file briefs or other written statements with the Appeals Council about the facts and law relevant to your case. After the Appeals Council receives the briefs or other written statements, or the time allowed (usually 30 days) for submitting them has expired, the Appeals Council will either issue a final decision of the Commissioner based on the preponderance of the evidence affirming, modifying, or reversing the decision of the administrative law judge, or remand the case to an administrative law judge for further proceedings, including a new decision.

(d) *Exceptions are not filed and the Appeals Council does not otherwise assume jurisdiction.* If no exceptions are filed and the Appeals Council does not assume jurisdiction of your case, the decision of the administrative law judge becomes the final decision of the Commissioner after remand.

[54 FR 37792, Sept. 13, 1989; 54 FR 40779, Oct. 3, 1989; 62 FR 38450, July 18, 1997; 73 FR 76944, Dec. 18, 2008]

§ 404.985 Application of circuit court law.

The procedures which follow apply to administrative determinations or decisions on claims involving the application of circuit court law.

(a) *General.* We will apply a holding in a United States Court of Appeals decision that we determine conflicts with our interpretation of a provision of the Social Security Act or regulations unless the Government seeks further judicial review of that decision or we relitigate the issue presented in the decision in accordance with paragraphs (c) and (d) of this section. We will apply the holding to claims at all levels of the administrative review process within the applicable circuit unless the holding, by its nature, applies only at certain levels of adjudication.

(b) *Issuance of an Acquiescence Ruling.* When we determine that a United States Court of Appeals holding conflicts with our interpretation of a provision of the Social Security Act or regulations and the Government does not seek further judicial review or is unsuccessful on further review, we will issue a Social Security Acquiescence Ruling. The Acquiescence Ruling will describe the administrative case and the court decision, identify the issue(s) involved, and explain how we will apply the holding, including, as necessary, how the holding relates to other decisions within the applicable circuit. These Acquiescence Rulings will generally be effective on the date of their publication in the FEDERAL REGISTER and will apply to all determinations and decisions made on or after that date unless an Acquiescence Ruling is rescinded as stated in paragraph (e) of this section. The process we will use

when issuing an Acquiescence Ruling follows:

(1) We will release an Acquiescence Ruling for publication in the FEDERAL REGISTER for any precedential circuit court decision that we determine contains a holding that conflicts with our interpretation of a provision of the Social Security Act or regulations no later than 120 days from the receipt of the court's decision. This timeframe will not apply when we decide to seek further judicial review of the circuit court decision or when coordination with the Department of Justice and/or other Federal agencies makes this timeframe no longer feasible.

(2) If we make a determination or decision on your claim between the date of a circuit court decision and the date we publish an Acquiescence Ruling, you may request application of the published Acquiescence Ruling to the prior determination or decision. You must demonstrate that application of the Acquiescence Ruling could change the prior determination or decision in your case. You may demonstrate this by submitting a statement that cites the Acquiescence Ruling or the holding or portion of a circuit court decision which could change the prior determination or decision in your case. If you can so demonstrate, we will readjudicate the claim in accordance with the Acquiescence Ruling at the level at which it was last adjudicated. Any readjudication will be limited to consideration of the issue(s) covered by the Acquiescence Ruling and any new determination or decision on readjudication will be subject to administrative and judicial review in accordance with this subpart. Our denial of a request for readjudication will not be subject to further administrative or judicial review. If you file a request for readjudication within the 60-day appeal period and we deny that request, we shall extend the time to file an appeal on the merits of the claim to 60 days after the date that we deny the request for readjudication.

(3) After we receive a precedential circuit court decision and determine that an Acquiescence Ruling may be required, we will begin to identify those claims that are pending before us within the circuit and that might be subject to readjudication if an Acquiescence Ruling is subsequently issued. When an Acquiescence Ruling is published, we will send a notice to those individuals whose cases we have identified which may be affected by the Acquiescence Ruling. The notice will provide information about the Acquiescence Ruling and the right to request readjudication under that Acquiescence Ruling, as described in paragraph (b)(2) of this section. It is not necessary for an individual to receive a notice in order to request application of an Acquiescence Ruling to his or her claim, as described in paragraph (b)(2) of this section.

(c) *Relitigation of court's holding after publication of an Acquiescence Ruling.* After we have published an Acquiescence Ruling to reflect a holding of a United States Court of Appeals on an issue, we may decide under certain conditions to relitigate that issue within the same circuit. We may relitigate only when the conditions specified in paragraphs (c)(2) and (3) of this section are met, and, in general, one of the events specified in paragraph (c)(1) of this section occurs.

(1) Activating events:

(i) An action by both Houses of Congress indicates that a circuit court decision on which an Acquiescence Ruling was based was decided inconsistently with congressional intent, such as may be expressed in a joint resolution, an appropriations restriction, or enactment of legislation which affects a closely analogous body of law;

(ii) A statement in a majority opinion of the same circuit indicates that the court might no longer follow its previous decision if a particular issue were presented again;

(iii) Subsequent circuit court precedent in other circuits supports our interpretation of the Social Security Act or regulations on the issue(s) in question; or

(iv) A subsequent Supreme Court decision presents a reasonable legal basis for questioning a circuit court holding upon which we base an Acquiescence Ruling.

(2) The General Counsel of the Social Security Administration, after consulting with the Department of Justice, concurs that relitigation of an

issue and application of our interpretation of the Social Security Act or regulations to selected claims in the administrative review process within the circuit would be appropriate.

(3) We publish a notice in the FEDERAL REGISTER that we intend to relitigate an Acquiescence Ruling issue and that we will apply our interpretation of the Social Security Act or regulations within the circuit to claims in the administrative review process selected for relitigation. The notice will explain why we made this decision.

(d) *Notice of relitigation.* When we decide to relitigate an issue, we will provide a notice explaining our action to all affected claimants. In adjudicating claims subject to relitigation, decisionmakers throughout the SSA administrative review process will apply our interpretation of the Social Security Act and regulations, but will also state in written determinations or decisions how the claims would have been decided under the circuit standard. Claims not subject to relitigation will continue to be decided under the Acquiescence Ruling in accordance with the circuit standard. So that affected claimants can be readily identified and any subsequent decision of the circuit court or the Supreme Court can be implemented quickly and efficiently, we will maintain a listing of all claimants who receive this notice and will provide them with the relief ordered by the court.

(e) *Rescission of an Acquiescence Ruling.* We will rescind as obsolete an Acquiescence Ruling and apply our interpretation of the Social Security Act or regulations by publishing a notice in the FEDERAL REGISTER when any of the following events occurs:

(1) The Supreme Court overrules or limits a circuit court holding that was the basis of an Acquiescence Ruling;

(2) A circuit court overrules or limits itself on an issue that was the basis of an Acquiescence Ruling;

(3) A Federal law is enacted that removes the basis for the holding in a decision of a circuit court that was the subject of an Acquiescence Ruling; or

(4) We subsequently clarify, modify or revoke the regulation or ruling that was the subject of a circuit court holding that we determined conflicts with our interpretation of the Social Security Act or regulations, or we subsequently publish a new regulation(s) addressing an issue(s) not previously included in our regulations when that issue(s) was the subject of a circuit court holding that conflicted with our interpretation of the Social Security Act or regulations and that holding was not compelled by the statute or Constitution.

[63 FR 24932, May 6, 1998]

REOPENING AND REVISING DETERMINATIONS AND DECISIONS

§ 404.987 Reopening and revising determinations and decisions.

(a) *General.* Generally, if you are dissatisfied with a determination or decision made in the administrative review process, but do not request further review within the stated time period, you lose your right to further review and that determination or decision becomes final. However, a determination or a decision made in your case which is otherwise final and binding may be reopened and revised by us.

(b) *Procedure for reopening and revision.* We may reopen a final determination or decision on our own initiative, or you may ask that a final determination or a decision to which you were a party be reopened. In either instance, if we reopen the determination or decision, we may revise that determination or decision. The conditions under which we may reopen a previous determination or decision, either on our own initiative or at your request, are explained in § 404.988.

[59 FR 8535, Feb. 23, 1994]

§ 404.988 Conditions for reopening.

A determination, revised determination, decision, or revised decision may be reopened—

(a) Within 12 months of the date of the notice of the initial determination, for any reason;

(b) Within four years of the date of the notice of the initial determination if we find good cause, as defined in § 404.989, to reopen the case; or

(c) At any time if—

(1) It was obtained by fraud or similar fault (see § 416.1488(c) of this chapter

for factors which we take into account in determining fraud or similar fault);

(2) Another person files a claim on the same earnings record and allowance of the claim adversely affects your claim;

(3) A person previously determined to be dead, and on whose earnings record your entitlement is based, is later found to be alive;

(4) Your claim was denied because you did not prove that a person died, and the death is later established—

(i) By a presumption of death under § 404.721(b); or

(ii) By location or identification of his or her body;

(5) The Railroad Retirement Board has awarded duplicate benefits on the same earnings record;

(6) It either—

(i) Denies the person on whose earnings record your claim is based gratuitous wage credits for military or naval service because another Federal agency (other than the Veterans Administration) has erroneously certified that it has awarded benefits based on the service; or

(ii) Credits the earnings record of the person on which your claim is based with gratuitous wage credits and another Federal agency (other than the Veterans Administration) certifies that it has awarded a benefit based on the period of service for which the wage credits were granted;

(7) It finds that the claimant did not have insured status, but earnings were later credited to his or her earnings record to correct errors apparent on the face of the earnings record (section 205(c)(5)(C) of the Act), to enter items transferred by the Railroad Retirement Board, which were credited under the Railroad Retirement Act when they should have been credited to the claimant's Social Security earnings record (section 205(c)(5)(D) of the Act), or to correct errors made in the allocation of wages or self-employment income to individuals or periods (section 205(c)(5)(G) of the Act), which would have given him or her insured status at the time of the determination or decision if the earnings had been credited to his or her earnings record at that time, and the evidence of these earnings was in our possession or the possession of the Railroad Retirement Board at the time of the determination or decision;

(8) It is fully or partially unfavorable to a party, but only to correct clerical error or an error that appears on the face of the evidence that was considered when the determination or decision was made;

(9) It finds that you are entitled to monthly benefits or to a lump sum death payment based on the earnings of a deceased person, and it is later established that:

(i) You were convicted of a felony or an act in the nature of a felony for intentionally causing that person's death; or

(ii) If you were subject to the juvenile justice system, you were found by a court of competent jurisdiction to have intentionally caused that person's death by committing an act which, if committed by an adult, would have been considered a felony or an act in the nature of a felony;

(10) It either—

(i) Denies the person on whose earnings record your claim is based deemed wages for internment during World War II because of an erroneous finding that a benefit based upon the internment has been determined by an agency of the United States to be payable under another Federal law or under a system established by that agency; or

(ii) Awards the person on whose earnings record your claim is based deemed wages for internment during World War II and a benefit based upon the internment is determined by an agency of the United States to be payable under another Federal law or under a system established by that agency; or

(11) It is incorrect because—

(i) You were convicted of a crime that affected your right to receive benefits or your entitlement to a period of disability; or

(ii) Your conviction of a crime that affected your right to receive benefits or your entitlement to a period of disability is overturned.

[45 FR 52081, Aug. 5, 1980, as amended at 49 FR 46369, Nov. 26, 1984; 51 FR 18313, May 19, 1986; 59 FR 1635, Jan. 12, 1994; 60 FR 19165, Apr. 17, 1995; 75 FR 33168, June 11, 2010]

§ 404.989 Good cause for reopening.

(a) We will find that there is good cause to reopen a determination or decision if—

(1) New and material evidence is furnished;

(2) A clerical error in the computation or recomputation of benefits was made; or

(3) The evidence that was considered in making the determination or decision clearly shows on its face that an error was made.

(b) We will not find good cause to reopen your case if the only reason for reopening is a change of legal interpretation or adminstrative ruling upon which the determination or decision was made.

§ 404.990 Finality of determinations and decisions on revision of an earnings record.

A determination or a decision on a revision of an earnings record may be reopened only within the time period and under the conditions provided in section 205(c) (4) or (5) of the Act, or within 60 days after the date you receive notice of the determination or decision, whichever is later.

§ 404.991 Finality of determinations and decisions to suspend benefit payments for entire taxable year because of earnings.

A determination or decision to suspend benefit payments for an entire taxable year because of earnings may be reopened only within the time period and under the conditions provided in section 203(h)(1)(B) of the Act.

§ 404.991a Late completion of timely investigation.

We may revise a determination or decision after the applicable time period in § 404.988(a) or § 404.988(b) expires if we begin an investigation into whether to revise the determination or decision before the applicable time period expires. We may begin the investigation either based on a request by you or by an action on our part. The investigation is a process of gathering facts after a determination or decision has been reopened to determine if a revision of the determination or decision is applicable.

(a) If we have diligently pursued the investigation to its conclusion, we may revise the determination or decision. The revision may be favorable or unfavorable to you. ''Diligently pursued'' means that in light of the facts and circumstances of a particular case, the necessary action was undertaken and carried out as promptly as the circumstances permitted. Diligent pursuit will be presumed to have been met if we conclude the investigation and if necessary, revise the determination or decision within 6 months from the date we began the investigation.

(b) If we have not diligently pursued the investigation to its conclusion, we will revise the determination or decision if a revision is applicable and if it will be favorable to you. We will not revise the determination or decision if it will be unfavorable to you.

[49 FR 46369, Nov. 26, 1984; 49 FR 48036, Dec. 10, 1984]

§ 404.992 Notice of revised determination or decision.

(a) When a determination or decision is revised, notice of the revision will be mailed to the parties at their last known address. The notice will state the basis for the revised determination or decision and the effect of the revision. The notice will also inform the parties of the right to further review.

(b) If a reconsidered determination that you are disabled, based on medical factors, is reopened for the purpose of being revised, you will be notified, in writing, of the proposed revision and of your right to request that a disability hearing be held before a revised reconsidered determination is issued. If a revised reconsidered determination is issued, you may request a hearing before an administrative law judge.

(c) If an administrative law judge or the Appeals Council proposes to revise a decision, and the revision would be based on evidence not included in the record on which the prior decision was based, you and any other parties to the decision will be notified, in writing, of the proposed action and of your right to request that a hearing be held before any further action is taken. If a revised decision is issued by an administrative law judge, you and any other party may request that it be reviewed by the

Appeals Council, or the Appeals Council may review the decision on its own initiative.

(d) If an administrative law judge or the Appeals Council proposes to revise a decision, and the revision would be based only on evidence included in the record on which the prior decision was based, you and any other parties to the decision will be notified, in writing, of the proposed action. If a revised decision is issued by an administrative law judge, you and any other party may request that it be reviewed by the Appeals Council, or the Appeals Council may review the decision on its own initiative.

[51 FR 303, Jan. 3, 1986]

§404.993 Effect of revised determination or decision.

A revised determination or decision is binding unless—

(a) You or another party to the revised determination file a written request for reconsideration or a hearing before an administrative law judge, as appropriate;

(b) You or another party to the revised decision file, as appropriate, a request for review by the Appeals Council or a hearing before an administrative law judge;

(c) The Appeals Council reviews the revised decision; or

(d) The revised determination or decision is further revised.

[51 FR 303, Jan. 3, 1986]

§404.994 Time and place to request a hearing on revised determination or decision.

You or another party to a revised determination or decision may request, as approporiate, further review or a hearing on the revision by filing a request in writing at one of our offices within 60 days after the date you receive notice of the revision. Further review or a hearing will be held on the revision according to the rules of this subpart.

§404.995 Finality of findings when later claim is filed on same earnings record.

If two claims for benefits are filed on the same earnings records, findings of fact made in a determination on the first claim may be revised in determining or deciding the second claim, even though the time limit for revising the findings made in the first claim has passed. However, a finding in connection with a claim that a person was fully or currently insured at the time of filing an application, at the time of death, or any other pertinent time, may be revised only under the conditions stated in §404.988.

§404.996 Increase in future benefits where time period for reopening expires.

If, after the time period for reopening under §404.988(b) has ended, new evidence is furnished showing a different date of birth or additional earnings for you (or for the person on whose earnings record your claim was based) which would otherwise increase the amount of your benefits, we will make the increase (subject to the limitations provided in section 205(c) (4) and (5) of the Act) but only for benefits payable after the time we received the new evidence. (If the new evidence we receive would lead to a decrease in your benefits, we will take no action if we cannot reopen under §404.988.)

[49 FR 46369, Nov. 26, 1984]

PAYMENT OF CERTAIN TRAVEL EXPENSES

§404.999a Payment of certain travel expenses—general.

When you file a claim for Social Security benefits, you may incur certain travel expenses in pursuing your claim. Sections 404.999b–404.999d explain who may be reimbursed for travel expenses, the types of travel expenses that are reimbursable, and when and how to claim reimbursement. Generally, the agency that requests you to travel will be the agency that reimburses you. No later than when it notifies you of the examination or hearing described in §404.999b(a), that agency will give you information about the right to travel reimbursement, the right to advance payment and how to request it, the rules on means of travel and unusual travel costs, and the need to submit receipts.

[51 FR 8808, Mar. 14, 1986]

§ 404.999b Who may be reimbursed.

(a) The following individuals may be reimbursed for certain travel expenses—

(1) You, when you attend medical examinations upon request in connection with disability determinations; these are medical examinations requested by the State agency or by us when additional medical evidence is necessary to make a disability determination (also referred to as consultative examinations, see § 404.1517);

(2) You, your representative (see § 404.1705 (a) and (b)), and all unsubpoenaed witnesses we or the State agency determines to be reasonably necessary who attend disability hearings; and

(3) You, your representative, and all unsubpoenaed witnesses we determine to be reasonably necessary who attend hearings on any claim for benefits before an administrative law judge.

(b) Sections 404.999a through 404.999d do not apply to subpoenaed witnesses. They are reimbursed under §§ 404.950(d) and 404.916(b)(1).

[51 FR 8808, Mar. 14, 1986]

§ 404.999c What travel expenses are reimbursable.

Reimbursable travel expenses include the ordinary expenses of public or private transportation as well as unusual costs due to special circumstances.

(a) Reimbursement for ordinary travel expenses is limited—

(1) To the cost of travel by the most economical and expeditious means of transportation available and appropriate to the individual's condition of health as determined by the State agency or by us, considering the available means in the following order—

(i) Common carrier (air, rail, or bus);

(ii) Privately owned vehicles;

(iii) Commercially rented vehicles and other special conveyances;

(2) If air travel is necessary, to the coach fare for air travel between the specified travel points involved unless first-class air travel is authorized in advance by the State agency or by the Secretary in instances when—

(i) Space is not available in less-than-first-class accommodations on any scheduled flights in time to accomplish the purpose of the travel;

(ii) First-class accommodations are necessary because you, your representative, or reasonably necessary witness is so handicapped or otherwise impaired that other accommodations are not practical and the impairment is substantiated by competent medical authority;

(iii) Less-than-first-class accommodations on foreign carriers do not provide adequate sanitation or health standards; or

(iv) The use of first-class accommodations would result in an overall savings to the government based on economic considerations, such as the avoidance of additional subsistence costs that would be incurred while awaiting availability of less-than-first-class accommodations.

(b) Unusual travel costs may be reimbursed but must be authorized in advance and in writing by us or the appropriate State official, as applicable, unless they are unexpected or unavoidable; we or the State agency must determine their reasonableness and necessity and must approve them before payment can be made. Unusual expenses that may be covered in connection with travel include, but are not limited to—

(1) Ambulance services;

(2) Attendant services;

(3) Meals;

(4) Lodging; and

(5) Taxicabs.

(c) If we reimburse you for travel, we apply the rules in §§ 404.999b through 404.999d and the same rates and conditions of payment that govern travel expenses for Federal employees as authorized under 41 CFR chapter 301. If a State agency reimburses you, the reimbursement rates shall be determined by the rules in §§ 404.999b through 404.999d and that agency's rules and regulations and may differ from one agency to another and also may differ from the Federal reimbursement rates.

(1) When public transportation is used, reimbursement will be made for the actual costs incurred, subject to the restrictions in paragraph (a)(2) of this section on reimbursement for first-class air travel.

(2) When travel is by a privately owned vehicle, reimbursement will be made at the current Federal or State

mileage rate specified for that geographic location plus the actual costs of tolls and parking, if travel by a privately owned vehicle is determined appropriate under paragraph (a)(1) of this section. Otherwise, the amount of reimbursement for travel by privately owned vehicle cannot exceed the total cost of the most economical public transportation available for travel between the same two points. *Total cost* includes the cost for all the authorized travelers who travel in the same privately owned vehicle. Advance approval of travel by privately owned vehicle is not required (but could give you assurance of its approval).

(3) Sometimes your health condition dictates a mode of transportation different from the most economical and expeditious. In order for your health to require a mode of transportation other than common carrier or passenger car, you must be so handicapped or otherwise impaired as to require special transportation arrangements and the conditions must be substantiated by competent medical authority.

(d) For travel to a hearing—

(1) Reimbursement is limited to travel within the U.S. For this purpose, the U.S. includes the U.S. as defined in §404.2(c)(6) and the Northern Mariana Islands.

(2) We or the State agency will reimburse you, your representative, or an unsubpoenaed witness only if the distance from the person's residence or office (whichever he or she travels from) to the hearing site exceeds 75 miles.

(3) For travel expenses incurred on or after April 1, 1991, the amount of reimbursement under this section for travel by your representative to attend a disability hearing or a hearing before an administrative law judge shall not exceed the maximum amount allowable under this section for travel to the hearing site from any point within the geographic area of the office having jurisdiction over the hearing.

(i) The geographic area of the office having jurisdiction over the hearing means, as appropriate—

(A) The designated geographic service area of the State agency adjudicatory unit having responsibility for providing the disability hearing;

(B) If a Federal disability hearing officer holds the disability hearing, the geographic area of the State (which includes a State as defined in §404.2(c)(5) and also includes the Northern Mariana Islands) in which the claimant resides or, if the claimant is not a resident of a State, in which the hearing officer holds the disability hearing; or

(C) The designated geographic service area of the Office of Hearings and Appeals hearing office having responsibility for providing the hearing before an administrative law judge.

(ii) We or the State agency determine the maximum amount allowable for travel by a representative based on the distance to the hearing site from the farthest point within the appropriate geographic area. In determining the maximum amount allowable for travel between these two points, we or the State agency apply the rules in paragraphs (a) through (c) of this section and the limitations in paragraph (d) (1) and (4) of this section. If the distance between these two points does not exceed 75 miles, we or the State agency will not reimburse any of your representative's travel expenses.

(4) If a change in the location of the hearing is made at your request from the location we or the State agency selected to one farther from your residence or office, neither your additional travel expenses nor the additional travel expenses of your representative and witnesses will be reimbursed.

[51 FR 8808, Mar. 14, 1986, as amended at 59 FR 8532, Feb. 23, 1994]

§404.999d When and how to claim reimbursement.

(a)(1) Generally, you will be reimbursed for your expenses after your trip. However, travel advances may be authorized if you request prepayment and show that the requested advance is reasonable and necessary.

(2) You must submit to us or the State agency, as appropriate, an itemized list of what you spent and supporting receipts to be reimbursed.

(3) Arrangements for special means of transportation and related unusual costs may be made only if we or the State agency authorizes the costs in writing in advance of travel, unless the costs are unexpected or unavoidable. If

they are unexpected or unavoidable we or the State agency must determine their reasonableness and necessity and must approve them before payment may be made.

(4) If you receive prepayment, you must, within 20 days after your trip, provide to us or the State agency, as appropriate, an itemized list of your actual travel costs and submit supporting receipts. We or the State agency will require you to pay back any balance of the advanced amount that exceeds any approved travel expenses within 20 days after you are notified of the amount of that balance. (State agencies may have their own time limits in place of the 20-day periods in the preceding two sentences.)

(b) You may claim reimbursable travel expenses incurred by your representative for which you have been billed by your representative, except that if your representative makes a claim for them to us or the State, he or she will be reimbursed directly.

(Approved by the Office of Management and Budget under control number 0960–0434)

[51 FR 8809, Mar. 14, 1986, as amended at 51 FR 44983, Dec. 16, 1986]

Subpart K—Employment, Wages, Self-Employment, and Self-Employment Income

AUTHORITY: Secs. 202(v), 205(a), 209, 210, 211, 229(a), 230, 231, and 702(a)(5) of the Social Security Act (42 U.S.C. 402(v), 405(a), 409, 410, 411, 429(a), 430, 431, and 902(a)(5)) and 48 U.S.C.1801.

SOURCE: 45 FR 20075, Mar. 27, 1980, unless otherwise noted.

§ 404.1001 Introduction.

(a)(1) In general, your social security benefits are based on your earnings that are on our records. (Subpart I of this part explains how we keep earnings records.) Basically, you receive credit only for earnings that are covered for social security purposes. The earnings are covered only if your work is covered. If you are an employee, your employer files a report of your covered earnings. If you are self-employed, you file a report of your covered earnings. Some work is covered by social security and some work is not. Also, some earnings are covered by social security and some are not. It is important that you are aware of what kinds of work and earnings are covered so that you will know whether your earnings should be on our records.

(2) If you are an employee, your covered work is called *employment*. This subpart explains our rules on the kinds of work that are covered as *employment* and the kinds that are not. We also explain who is an employee.

(3) If your work is *employment*, your covered earnings are called *wages*. This subpart explains our rules on the kinds of earnings that are covered as *wages* and the kinds that are not.

(4) If you work for yourself, you are self-employed. The subpart explains our rules on the kinds of self-employment that are covered and the kinds that are not.

(5) If you are self-employed, your covered earnings are called *self-employment income* which is based on your *net earnings from self-employment* during a taxable year. This subpart explains our rules on the kinds of earnings that are covered as *net earnings from self-employment* and the kinds that are not. We also explain how to figure your *net earnings from self-employment* and determine your *self-employment income* which is the amount that goes on our records.

(b) We include basically only the rules that apply to current work or that the law requires us to publish as regulations. We generally do not include rules that are seldom used or do not apply to current work because of changes in the law.

(c) The Social Security Act and the Internal Revenue Code (Code) have similar provisions on coverage of your earnings because the one law specifies the earnings for which you will receive credit for benefit purposes and the other the earnings on which you must pay social security taxes. Because the Code (title 26 U.S.C.) has some provisions that are not in the Act but which may affect you, you may need to refer to the Code or the Internal Revenue Service regulations (title 26 of the Code of Federal Regulations) to get complete information about your social security coverage.

(d) The rules are organized in the following manner:

(1) Sections 404.1003 through 404.1010 include the rules on employment. We discuss what we mean by employment, what work is covered as employment for social security purposes, and describe the kinds of workers who are considered employees.

(2) In §§ 404.1012 through 404.1038 we discuss various types of work that are not covered as employment for social security purposes.

(3) The rules on wages are found in §§ 404.1041 through 404.1059. We describe what is meant by the term *wages*, discuss the various types of pay that count as wages, and state when the pay counts for Social Security purposes. We include explanations of agriculture labor, domestic services, service not in the course of the employer's business, and home worker services under *wages* because special standards apply to these services.

(4) Our rules on self-employment and self-employment income are found in §§ 404.1065 through 404.1096. We discuss what we mean by self-employment, what we mean by a trade or business, what types of activities are considered self-employment, how to determine self-employment income, and how net earnings from self-employment are figured.

[45 FR 20075, Mar. 27, 1980, as amended at 55 FR 7309, Mar. 1, 1990; 61 FR 38365, July 24, 1996]

§ 404.1002 Definitions.

(a) *General definitions.* As used in this subpart—

The *Act* means the Social Security Act, as amended.

The *Code* means the Internal Revenue Code of 1954, as amended.

We, *our*, or *us* means the Social Security Administration.

You or *your* means any person whose earnings from employment or self-employment are included or excluded under social security.

(b) *Other definitions.* For ease of reference, we have placed other definitions in the sections of this subpart in which they are used.

EMPLOYMENT

§ 404.1003 Employment.

Employment means, generally, any service covered by social security performed by an employee for his or her employer. The rules on who is an employee and who is an employer are contained in §§ 404.1005 through 404.1010. Section 404.1004 states the general rule on the kinds of work covered as employment. Exceptions to the general rule are contained in §§ 404.1012 through 404.1038 which explain the kinds of work excluded from employment. All of these rules apply to current work unless otherwise indicated.

[45 FR 20075, Mar. 27, 1980, as amended at 61 FR 38365, July 24, 1996]

§ 404.1004 What work is covered as employment?

(a) *General requirements of employment.* Unless otherwise excluded from coverage under §§ 404.1012 through 404.1038, the work you perform as an employee for your employer is covered as employment under social security if one of the following situations applies:

(1) You perform the work within the United States (whether or not you or your employer are a citizen or resident of the United States).

(2) You perform the work outside the United States and you are a citizen or resident of the United States working for—

(i) An American employer; or

(ii) A foreign affiliate of an American employer that has in effect an agreement covering your work under section 3121(l) of the Code.

(3) You perform the work on or in connection with an American vessel or American aircraft and the conditions in paragraphs (a)(3) (i) and (ii) are met. Your citizenship or residence does not matter. The citizenship or residence of your employer matters only if it affects whether the vessel is an American vessel.

(i) You enter into the contract of employment within the United States or the vessel or aircraft touches at a port or airport within the United States during the performance of your contract of employment on the vessel or aircraft.

(ii) You are employed on and in connection with the vessel or aircraft when outside the United States.

(4) Your work is designated as employment or recognized as equivalent to employment under a totalization agreement. (See § 404.1913. An agreement may exempt work from coverage as well as extend coverage to work.)

(5) Your work performed after December 31, 1994, is in the employ of an international organization pursuant to a transfer from a Federal agency under section 3582 of title 5 of the United States Code and both the following are met:

(i) Immediately before the transfer, your work for the Federal agency was covered employment; and

(ii) You would be entitled, upon separation from the international organization and proper application, to reemployment with the Federal agency under section 3582.

(b) *Explanation of terms used in this section*—(1) *American employer* means—

(i) The United States or any of its instrumentalities;

(ii) A State, a political subdivision of a State, or an instrumentality of any one or more States or political subdivisions of a State;

(iii) An individual who is a resident of the United States;

(iv) A partnership, if at least two-thirds of the partners are residents of the United States;

(v) A trust, if all of the trustees are residents of the United States; or

(vi) A corporation organized under the laws of the United States or of any State.

(2) *American aircraft* means an aircraft registered under the laws of the United States.

(3) *American vessel* means a vessel documented or numbered under the laws of the United States. It also includes a vessel neither documented nor numbered under the laws of the United States, nor documented under the laws of any foreign country, if its crew is employed solely by one or more citizens or residents of the United States, or corporations organized under the laws of the United States or of any State.

(4) *Citizen of the United States* includes a citizen of the Commonwealth of Puerto Rico, the Virgin Islands, Guam, American Samoa or the Commonwealth of the Northern Mariana Islands.

(5) *Foreign affiliate* refers to a foreign affiliate as defined in section 3121(l)(6) of the Code.

(6) *On and in connection with* refers to the performance of work on a vessel or aircraft which concerns the vessel or aircraft. Examples of this kind of work are the services performed on a vessel by employees as officers or crew members, or as employees of concessionaires, of the vessel.

(7) *On or in connection with* refers to work performed on the vessel or aircraft and to work which concerns the vessel or aircraft but not actually performed on it. For example, shore services in connection with repairing, loading, unloading, or provisioning a vessel performed by employees as officers or crew members, or as employees of concessionaires, of the vessel are included, since this work concerns the vessel though not performed on it.

(8) *State* refers to the 50 States, the District of Columbia, the Commonwealth of Puerto Rico, the Virgin Islands, Guam, American Samoa, and the Commonwealth of the Northern Mariana Islands.

(9) *United States* when used in a geographical sense means the 50 States, the District of Columbia, the Commonwealth of Puerto Rico, the Virgin Islands, Guam, American Samoa, and the Commonwealth of the Northern Mariana Islands.

[45 FR 20075, Mar. 27, 1980, as amended at 50 FR 36573, Sept. 9, 1985; 55 FR 51687, Dec. 17, 1990; 61 FR 38365, July 24, 1996; 69 FR 51555, Aug. 20, 2004]

§ 404.1005 Who is an employee.

You must be an employee for your work to be covered as employment for social security purposes. You are an employee if you are—

(a) A corporation officer as described in § 404.1006;

(b) A common-law employee as described in § 404.1007 (unless you are, after December 31, 1982, a qualified real estate agent or direct seller as described in § 404.1069); or

(c) An agent-driver or commission-driver, a full-time life insurance salesman, a home worker, or a traveling or city salesman as described in § 404.1008.

[45 FR 20075, Mar. 27, 1980, as amended at 48 FR 40515, Sept. 8, 1983]

§ 404.1006 Corporation officer.

If you are an officer of a corporation, you are an employee of the corporation if you are paid or you are entitled to be paid for holding office or performing services. However, if you are a director of a corporation, we consider you to be self-employed when you work as a director.

§ 404.1007 Common-law employee.

(a) *General.* The common-law rules on employer-employee status are the basic test for determining whether you and the person or firm you work for have the relationship of employee and employer. Even though you are considered self-employed under the common-law rules, you may still be an employee for social security purposes under § 404.1006 (relating to corporation officers) or § 404.1008 (relating to workers in four specific jobs). In general, you are a common-law employee if the person you work for may tell you what to do and how, when, and where to do it. The person or firm you work for does not have to give these orders, but needs only the right to do so. Whether or not you are a common-law employee is not always clear. Several aspects of your job arrangement are considered in determining whether you are an employee or are self-employed under the common-law rules.

(b) *Factors that show employee status.* Some aspects of a job arrangement that may show you are an employee are as follows:

(1) The person you work for may fire you.

(2) The person you work for furnishes you with tools or equipment and a place to work.

(3) You receive training from the person you work for or are required to follow that person's instructions.

(4) You must do the work yourself.

(5) You do not hire, supervise, or pay assistants (unless you are employed as a foreman, manager, or supervisor).

(6) The person you work for sets your hours of work, requires you to work full-time, or restricts you from doing work for others.

(7) The person you work for pays your business or traveling expenses.

(8) You are paid by the hour, week or month.

(c) *Factors that show self-employed status.* Some aspects of a job arrangement or business venture that may show you are self-employed are as follows:

(1) You make a profit or suffer a loss.

(2) You are hired to complete a certain job and if you quit before the job is completed you may be liable for damages.

(3) You work for a number of persons or firms at the same time.

(4) You advertise to the general public that you are available to perform services.

(5) You pay your own expenses and have your own equipment and work place.

(d) *Questions about your status.* If there is a question about whether you are working as an employee or are self-employed, we or the Internal Revenue Service will make a determination after examining all of the facts of your case.

§ 404.1008 Agent-driver or commission-driver, full-time life insurance salesman, home worker, or traveling or city salesman.

(a) *General.* In addition to common-law employees and corporation officers, we consider workers in the four types of jobs described in paragraphs (b) through (e) of this section to be employees if their services are performed under the following conditions:

(1) Under the work arrangement the worker is expected to do substantially all of the work personally.

(2) The worker must not have a substantial investment in the facilities used to do the work. Facilities include such things as a place to work, storage space, equipment, machinery and office furniture. However, facilities do not include tools, equipment or clothing of the kind usually provided by employees nor transportation such as a car or truck.

(3) The work must be performed as part of a continuing work relationship between the worker and the person for

whom the work is done. The work performed must not be a single transaction. Part-time and regular seasonal work may be performed as part of a continuing work relationship.

(b) *Agent-driver or commission-driver.* This is a driver hired by another person to distribute meat products, vegetable products, fruit products, bakery products, beverages (other than milk), or laundry or dry-cleaning services. We consider you an agent-driver or commission-driver if you are paid a commission based on your sales or the difference between the price you charge your customers and the amount you pay for the goods or services. It makes no difference whether you drive your own truck or the company's truck or whether you solicit the customers you serve.

(c) *Full-time life insurance salesman.* A full-time life insurance salesman's main activity is selling life insurance or annuity contracts, or both, mostly for one life insurance company. If you are a full-time life insurance salesman, you are probably provided office space, stenographic help, telephone, forms, rate books and advertising materials by the company or general agent, without cost to you.

(d) *Home worker.* A home worker is a person who works away from the place of business of the person he or she works for, usually at home. If you are a home worker and you work according to the instructions of the person you work for, on material or goods furnished by that person, and are required to return the finished product to that person (or another person whom he or she designates), you are an employee.

(e) *Traveling or city salesman.* The main activity of a traveling or city salesman is taking orders for merchandise for another person or firm. The salesman gets orders from wholesalers, retailers, contractors, or operators of hotels, restaurants or other firms whose main business is furnishing food or lodging or both. The salesman sells merchandise to others for resale or for use in their own business. We consider you a traveling or city salesman if most of your work is done for a single person or firm even though you have incidental sideline sales activities. However, you are not an employee under this paragraph as to those sideline sales. If you take orders for a number of persons or firms as a *multiple line* salesman, you are not a traveling or city salesman.

§ 404.1009 Who is an employer.

A person is an employer if he or she employs at least one employee. Sometimes it is not clear who a worker's employer is, since the employer does not always pay the worker's wages. When there is a question about who the employer is, we use the common-law rules to identify the employer (see § 404.1007).

§ 404.1010 Farm crew leader as employer.

A farm crew leader furnishes workers to do agricultural labor for another person, usually a farm operator. If the crew leader pays the workers (the money can be the crew leader's or the farm operator's), the crew leader is deemed to be the employer of the workers and is self-employed. However, the crew leader is not deemed the employer of the workers if there is a written agreement between the crew leader and the farm operator naming the crew leader as an employee. If the crew leader does not have this agreement and does not pay the workers, we use the common-law rules to determine the crew leader's status.

WORK EXCLUDED FROM EMPLOYMENT

§ 404.1012 Work excluded from employment.

Certain kinds of work performed by an employee are excluded from employment. They are described in §§ 404.1014 through 404.1038 and are exceptions to the general rule in § 404.1004 on the kinds of work that are covered as employment. In general, if the work performed by an employee is excluded from employment, the work is not covered under social security. However, certain kinds of work performed by an employee, even though excluded from employment, are covered as self-employment for social security purposes. In addition, if part of the work performed by an employee for the same employer is included as employment and part is excluded from employment,

all the work may be included or all may be excluded as described in § 404.1013.

[45 FR 20075, Mar. 27, 1980, as amended at 61 FR 38365, July 24, 1996]

§ 404.1013 Included-excluded rule.

(a) If part of your work for an employer during a pay period is covered as employment and part excluded, all of your work during that period is considered covered if at least one-half of your time in the pay period is in covered work. If you spend most of your time in a pay period doing work that is excluded, all of your work in that period is excluded.

(b) A *pay period* is the period for which your employer ordinarily pays you. It cannot be more than 31 consecutive days. If the actual period is not always the same, your usual pay period will be used for applying the included-excluded rule.

(c) The included-excluded rule does not apply and your covered work will be counted if—

(1) Part of your work is covered by the Railroad Retirement Tax Act and part by the Social Security Act; or

(2) You have no usual *pay period* of 31 consecutive days or less, or you have separate pay periods for covered and excluded work.

§ 404.1014 Domestic service by a student for a local college club, fraternity or sorority.

(a) *General.* If you are a student and do work of a household nature in or about the club rooms or house of a local college club or local chapter of a college fraternity or sorority, and are enrolled and regularly attending classes at a school, college, or university, your work is not covered as employment.

(b) *Explanation of terms*—(1) *Work of a household nature* means the type of work done by cooks, waiters, butlers, maids, janitors, laundresses, furnacemen, handymen, gardeners, housekeepers and housemothers.

(2) A *local college club or local chapter of a college fraternity or sorority* does not include an alumni club or chapter. Also, if the club rooms or house are used mostly for supplying board or lodging to students or nonstudents as a business, the work done is not excluded by this section.

§ 404.1015 Family services.

(a) *General.* If you work as an employee of a relative, the work is excluded from employment if—

(1) You work while under age 18 in the employ of your parent;

(2) You do nonbusiness work (see § 404.1058(a)(3) for an explanation of nonbusiness work) or perform domestic service (as described in § 404.1057(b)) as an employee of your parent while under age 21;

(3) You do nonbusiness work as an employee of your son, daughter, or spouse; or

(4) You perform domestic service in the private home of your son, daughter or spouse as an employee of that son, daughter or spouse unless—

(i) The son or daughter has a child (either natural, adopted or stepchild) living in the home who is under age 18 or, if older, has a mental or physical condition that requires the personal care and supervision of an adult for at least four continuous weeks in the calendar quarter in which the work is done; and

(ii) The son or daughter is a widower or widow, or is divorced and has not remarried, or has a spouse living in the home who, because of a physical or mental condition, is incapable of taking care of the child and the condition is present for at least four continuous weeks in the calendar quarter in which the work is done.

(b) *Family work for other than sole proprietor.* Work for a corporation is not excluded under this section, and work for a partnership is not excluded unless the required family relationship exists between the employee and each of the partners.

[45 FR 20075, Mar. 27, 1980, as amended at 57 FR 59913, Dec. 17, 1992]

§ 404.1016 Foreign agricultural workers.

Farm work done by foreign workers lawfully admitted to the United States on a temporary basis to do farm work is not covered as employment. The excluded work includes any services connected with farm operations.

§ 404.1017 Sharefarmers.

(a) If you are a sharefarmer, your services are not covered as employment, but as self-employment.

(b) You are a sharefarmer if you have an arrangement with the owner or tenant of the land and the arrangement provides for all of the following:

(1) You will produce agricultural or horticultural commodities on the land.

(2) The commodities you produce or the income from their sale will be divided between you and the person with whom you have the agreement.

(3) The amount of your share depends on the amount of commodities you produce.

(c) If under your agreement you are to receive a specific rate of pay, a fixed sum of money or a specific amount of the commodities not based on your production, you are not a sharefarmer for social security purposes.

§ 404.1018 Work by civilians for the United States Government or its instrumentalities—wages paid after 1983.

(a) *General.* If you are a civilian employee of the United States Government or an instrumentality of the United States, your employer will determine the amount of remuneration paid for your work and the periods in or for which such remuneration was paid. We will determine whether your employment is covered under Social Security, the periods of such covered employment, and whether remuneration paid for your work constitutes wages for purposes of Social Security. To make these determinations we will consider the date of your appointment to Federal service, your previous Federal employing agencies and positions (if any), whether you were covered under Social Security or a Federal civilian retirement system, and whether you made a timely election to join a retirement system established by the Federal Employees' Retirement System Act of 1986 or the Foreign Service Pension System Act of 1986. Using this information and the following rules, we will determine that your service is covered unless—

(1) The service would have been excluded if the rules in effect in January 1983 had remained in effect; and

(i) You have been continuously performing such service since December 31, 1983; or

(ii) You are receiving an annuity from the Civil Service Retirement and Disability Fund or benefits for service as an employee under another retirement system established by a law of the United States and in effect on December 31, 1983, for employees of the Federal Government other than a system for members of the uniformed services.

(2) The service is under the provisions of 28 U.S.C. 294, relating to the assignment of retired Federal justices and judges to active duty.

(b) *Covered services*—(1) *Federal officials.* Any service for which you received remuneration after 1983 is covered if performed—

(i) As the President or the Vice President of the United States;

(ii) In a position placed in the Executive Schedule under 5 U.S.C. 5312 through 5317;

(iii) As a noncareer appointee in the Senior Executive Service or a noncareer member of the Senior Foreign Service;

(iv) In a position to which you are appointed by the President, or his designee, or the Vice President under 3 U.S.C. 105(a)(1), 106(a)(1), or 107(a)(1) or (b)(1) if the maximum rate of basic pay for such position is at or above the rate for level V of the Executive Schedule;

(v) As the Chief Justice of the United States, an Associate Justice of the Supreme Court, a judge of a United States court of appeals, a judge of a United States district court, including the district court of a territory, a judge of the United States Claims Court, a judge of the United States Court of International Trade, a judge of the United States Tax Court, a United States magistrate, or a referee in bankruptcy or United States bankruptcy judge; or

(vi) As a Member, Delegate, or Resident Commissioner of or to the Congress.

(2) *Legislative Branch Employees.* Service you perform for the legislative branch of the Federal Government for which you are paid remuneration after 1983 is generally covered by Social Security if such service is not covered by the Civil Service Retirement System

or by another retirement system established by a law of the United States and in effect on December 31, 1983, for employees of the Federal Government other than a system for members of the uniformed services.

(3) *Election to become subject to the Federal Employees' Retirement System or the Foreign Service Pension System.* Your service is covered if:

(i) You timely elect after June 30, 1987, under either the Federal Employees' Retirement System Act or the Central Intelligence Agency Retirement Act, to become subject to the Federal Employees Retirement System provided in 5 U.S.C. 8401 through 8479; or

(ii) You timely elect after June 30, 1987, to become subject to the Foreign Service Pension System provided in 22 U.S.C. 4071 through 4071(k).

(4) *Subsequent Federal civilian service.* If you perform Federal civilian service on or after November 10, 1988, which is described in paragraph (b)(1), (b)(2), or (b)(3) of this section you will continue to be covered for any subsequent Federal Civilian Service not excluded under paragraph (c) of this section.

(c) *Excluded Service.* Notwithstanding §404.1018a and this section, your service is not covered if performed—

(1) In a penal institution of the United States as an inmate thereof;

(2) As an employee included under 5 U.S.C. 5351(2) relating to certain interns, student nurses, and other student employees of hospitals of the Federal Government, other than as a medical or dental intern or a medical or dental resident in training;

(3) As an employee serving on a temporary basis in case of fire, storm, earthquake, flood, or other similar emergency; or

(4) Under any other statutory provisions that would require exclusion for reasons other than being in the employ of the Federal Government or an instrumentality of such.

(d) *Work as a Peace Corps Volunteer.* Work performed as a volunteer or volunteer leader within the meaning of the Peace Corps Act, 22 U.S.C. 2501 through 2523, is covered as employment.

(e) *Work as Job Corps Enrollee.* Work performed as an enrollee in the Job Corps is considered to be performed in the employ of the United States.

(f) *Work by Volunteer in Service to America.* Work performed and training received as a Volunteer in Service to America is considered to be performed in the employ of the United States if the volunteer is enrolled for a period of service of at least 1 year. If the enrollment is for less than 1 year, we use the common-law rules in §404.1007 to determine the volunteer's status.

(g) *Work for international organizations.* Work performed for an international organization by an employee who was transferred from a Federal agency is generally covered as employment if, immediately before the transfer, the employee's services for the Federal agency were covered. (See §404.1004(a)(5) and §404.1034(c).)

(h) *Meaning of "continuously performing"*—(1) *Absence of less than 366 days.* You are considered to be continuously performing service described in paragraph (a)(1)(i) of this section if you return to the performance of such service after being separated from such service for a period of less than 366 consecutive days, regardless of whether the period began before, on, or after December 31, 1983.

(2) *Other absences.* You are considered to be continuously performing service described in paragraph (a)(1)(i) of this section regardless of the length of separation or whether the period of separation began before, on, or after December 31, 1983, if you—

(i) Return to the performance of such service after being detailed or transferred from such service to an international organization as described under 5 U.S.C. 3343 or under 5 U.S.C. 3581;

(ii) Are reemployed or reinstated after being separated from such service for the purpose of accepting employment with the American Institute of Taiwan as provided under 22 U.S.C. 3310;

(iii) Return to the performance of such service after performing service as a member of a uniformed service including service in the National Guard and temporary service in the Coast Guard Reserve and after exercising restoration or reemployment rights as provided under 38 U.S.C. chapter 43; or

(iv) Return to the performance of such service after employment by a tribal organization to which section 105(e)(2) of the Indian Self-Determination Act applies.

[53 FR 38944, Oct. 4, 1988; 53 FR 44551, Nov. 3, 1988, as amended at 55 FR 24891, June 19, 1990; 61 FR 38365, July 24, 1996; 79 FR 33684, June 12, 2014]

§ 404.1018a Work by civilians for the United States Government or its instrumentalities—remuneration paid prior to 1984.

(a) *General—remuneration paid prior to 1984.* If you worked as a civilian employee of the United States Government or an instrumentality of the United States, your work was excluded from employment if that work was covered by a retirement system established by law. Your work for an instrumentality that was exempt from Social Security tax was also excluded. Certain other work for the United States or an instrumentality of the United States was specifically excluded and is described in this section.

(b) *Work covered by a retirement system—remuneration paid prior to 1984.* Work you did as an employee of the United States or an instrumentality of the United States was excluded from employment if the work was covered by a retirement system established by a law of the United States. If you had a choice as to whether your work was covered by the retirement system, the work was not covered by that system until you chose that coverage. In order for the exclusion to apply, the work you did, rather than the position you held, must have been covered by the retirement system.

(c) *Work that was specifically excluded—remuneration paid prior to 1984.* Work performed by an employee of the United States or an instrumentality of the United States was excluded if it was done—

(1) As the President or Vice President of the United States;

(2) As a Member of the United States Congress, a Delegate to Congress, or a Resident Commissioner;

(3) In the legislative branch of the United States Government;

(4) By a student nurse, student dietitian, student physical therapist or student occupational therapist who was assigned or attached to a Federal hospital, clinic, or medical or dental laboratory;

(5) By a person designated as a student employee with the approval of the Office of Personnel Management who was assigned or attached primarily for training purposes to a Federal hospital, clinic, or medical or dental laboratory, other than a medical or dental intern or resident in training;

(6) By an employee who served on a temporary basis in case of fire, storm, earthquake, flood, or other similar emergency;

(7) By a person to whom the Civil Service Retirement Act did not apply because the person's services were subject to another retirement system established by a law of the United States or by the instrumentality of the United States for which the work was done, other than the retirement system established by the Tennessee Valley Authority under the plan approved by the Secretary of Health, Education, and Welfare on December 28, 1956; or

(8) By an inmate of a penal institution of the United States, if the work was done in the penal institution.

(d) *Work for instrumentalities of the United States exempt from employer tax—remuneration paid prior to 1984.* (1) Work performed by an employee of an instrumentality of the United States was excluded if—

(i) The instrumentality was exempt from the employer tax imposed by section 3111 of the Code or by section 1410 of the Internal Revenue Code of 1939; and

(ii) The exemption was authorized by another law specifically referring to these sections.

(2) Work performed by an employee of an instrumentality of the United States was excluded if the instrumentality was not on December 31, 1950, subject to the employer tax imposed by section 1410 of the Internal Revenue Code of 1939 and the work was covered by a retirement system established by the instrumentality, unless—

(i) The work was for a corporation wholly owned by the United States;

(ii) The work was for a Federal land bank association, a production credit association, a Federal Reserve Bank, a

Federal Credit Union, a Federal land bank, a Federal intermediate credit bank, a bank for cooperatives, or a Federal Home Loan Bank;

(iii) The work was for a State, county, or community committee under the Agriculture Marketing Service and the Commodity Stabilization Service, formerly the Production and Marketing Administration; or

(iv) The work was by a civilian, who was not paid from funds appropriated by the Congress, in activities conducted by an instrumentality of the United States subject to the jurisdiction of the Secretary of Defense or Secretary of Transportation at installations intended for the comfort, pleasure, contentment, and mental and physical improvement of personnel of the Defense Department or the Coast Guard, such as—

(A) Army and Air Force Exchange Service;

(B) Army and Air Force Motion Picture Service;

(C) Coast Guard Exchanges;

(D) Navy Ship's Service Stores; and

(E) Marine Corps Post Exchanges.

(3) For purposes of paragraph (d)(2) of this section, if an employee has a choice as to whether his or her work was covered by a retirement system, the work was not covered by that system until he or she chose that coverage. The work done, rather than the position held, must have been covered by the retirement system.

(e) *Work as a Peace Corps Volunteer—remuneration paid prior to 1984.* Work performed as a volunteer or volunteer leader within the meaning of the Peace Corps Act, 22 U.S.C. 2501 through 2523, was covered as employment.

(f) *Work as Job Corps Enrollee—remuneration paid prior to 1984.* Work performed as an enrollee in the Job Corps was considered to be performed in the employ of the United States.

(g) *Work by Volunteer in Service to America—remuneration paid prior to 1984.* Work performed and training received as a Volunteer in Service to America was considered to be performed in the employ of the United States if the volunteer was enrolled for a period of service of at least one year. If the enrollment was for less than one year, we used the common-law rules in § 404.1007 to determine the volunteer's status.

[53 FR 38945, Oct. 4, 1988]

§ 404.1018b Medicare qualified government employment.

(a) *General.* The work of a Federal, State, or local government employee not otherwise subject to Social Security coverage may constitute Medicare qualified government employment. Medicare qualified government employment means any service which in all ways meets the definition of ''employment'' for title II purposes of the Social Security Act, except for the fact that the service was performed by a Federal, State or local government employee. This employment is used solely in determining eligibility for protection under part A of title XVIII of the Social Security Act (Hospital Insurance) and for coverage under the Medicare program for end-stage renal disease.

(b) *Federal employment.* If, beginning with remuneration paid after 1982, your service as a Federal employee is not otherwise covered employment under the Social Security Act, it is Medicare qualified government employment unless excluded under § 404.1018(c).

(c) *State and local government employment.* If, beginning with service performed after March 31, 1986, your service as an employee of a State or political subdivision (as defined in § 404.1202(b)), Guam, American Samoa, the District of Columbia, or the Northern Mariana Islands is excluded from covered employment solely because of section 210(a)(7) of the Social Security Act which pertains to employees of State and local governments (note §§ 404.1020 through 404.1022), it is Medicare qualified government employment except as provided in paragraphs (c) (1) and (2) of this section.

(1) An individual's service shall not be treated as employment if performed—

(i) By an individual employed by a State or political subdivision for the purpose of relieving that individual from unemployment;

(ii) In a hospital, home, or other institution by a patient or inmate thereof as an employee of a State, political

subdivision, or of the District of Columbia;

(iii) By an individual, as an employee of a State, political subdivision or the District of Columbia serving on a temporary basis in case of fire, storm, snow, earthquake, flood, or other similar emergency;

(iv) By an individual as an employee included under 5 U.S.C. 5351(2) (relating to certain interns, student nurses, and other student employees of hospitals of the District of Columbia government), other than as a medical or dental intern or a medical or dental resident in training; or

(v) By an election official or election worker paid less than $100 in a calendar year for such service prior to 1995, or less than $1,000 for service performed in any calendar year after 1994 and before 2000, or, for service performed in any calendar year after 1999, less than the $1,000 base amount, as adjusted pursuant to section 218(c)(8)(B) of the Social Security Act to reflect changes in wages in the economy. We will publish this adjustment of the $1,000 base amount in the FEDERAL REGISTER on or before November 1 preceding the year for which the adjustment is made.

(2) An individual's service performed for an employer shall not be treated as employment if—

(i) The service would be excluded from coverage under section 210(a)(7) of the Social Security Act which pertains to employees of State and local governments;

(ii) The service is performed by an individual who—

(A) Was performing substantial and regular service for remuneration for that employer before April 1, 1986;

(B) Was a bona fide employee of that employer on March 31, 1986; and

(C) Did not enter into the employment relationship with that employer for purposes of meeting the requirements of paragraphs (c)(2)(ii) (A) and (B) of this section; and

(iii) After March 31, 1986, but prior to the service being performed, the employment relationship with that employer had not been terminated.

[57 FR 59913, Dec. 17, 1992, as amended at 61 FR 38366, July 24, 1996]

§ 404.1019 Work as a member of a uniformed service of the United States.

(a) Your work as a member of a uniformed service of the United States is covered under Social Security (unless creditable under the Railroad Retirement Act), if—

(1) On or after January 1, 1957, the work is service on active duty or active duty for training but not including service performed while on leave without pay; or

(2) On or after January 1, 1988, the work is service on inactive duty training.

(b) You are a *member of a uniformed service* if—

(1) You are appointed, enlisted, or inducted into (or a retired member of)—

(i) One of the armed services (Army, Navy, Air Force, Marine Corps, or Coast Guard); or

(ii) A component of one of the armed services, including any reserve component as defined in Veterans' Benefits, 38 U.S.C. 101 (except the Coast Guard Reserve as a temporary member);

(2) You are a commissioned officer (including a retired commissioned officer) of the National Oceanic and Atmospheric Administration or the Regular or Reserve Corps of the Public Health Service;

(3) You are a member of the Fleet Reserve or Fleet Marine Corps Reserve;

(4) You are a cadet at the United States Military, Coast Guard, or Air Force Academy, or a midshipman at the United States Naval Academy;

(5) You are a member of the Reserve Officers Training Corps, the Naval Reserve Officers Training Corps, or the Air Force Reserve Officers Training Corps, when ordered to annual training duty for 14 days or more including periods of authorized travel to and from that duty; or

(6) You are selected for active military or naval training under the Military Selective Service Act or are provisionally accepted for active duty in the military or naval service and you are ordered or directed to a place for final acceptance or entry upon active duty and are on the way to or from, or at, that place.

[45 FR 20075, Mar. 27, 1980, as amended at 57 FR 59913, Dec. 17, 1992]

§ 404.1020 Work for States and their political subdivisions and instrumentalities.

(a) *General.* If you work as an employee of a State, a political subdivision of a State, or any wholly owned instrumentality of one or more of these, your work is excluded from employment unless—

(1) The work is covered under an agreement under section 218 of the Act (see subpart M of this part); or

(2) The work is *covered transportation service* as defined in section 210(k) of the Act (see paragraph (c) of this section).

(3) You perform services after July 1, 1991, as an employee of a State (other than the District of Columbia, Guam, the Commonwealth of the Northern Mariana Islands, or American Samoa), a political subdivision of a State, or any wholly owned instrumentality of one or more of the foregoing and you are not a member of a retirement system of such State, political subdivision, or instrumentality. Retirement system has the meaning given that term in section 218(b)(4) of the Act, except as provided in regulations prescribed by the Secretary of the Treasury. This paragraph does not apply to services performed—

(i) As an employee employed to relieve you from unemployment;

(ii) In a hospital, home, or other institution where you are a patient or inmate thereof;

(iii) As an employee serving on a temporary basis in case of fire, storm, snow, earthquake, flood, or other similar emergency;

(iv) As an election official or election worker if the remuneration paid in a calendar year for such service prior to 1995 is less than $100, or less than $1000 for service performed in any calendar year after 1994 and before 2000, or, for service performed in any calendar year after 1999, less than the $1000 base amount, as adjusted pursuant to section 218(c)(8)(B) of the Social Security Act to reflect changes in wages in the economy. We will publish this adjustment of the $1000 base amount in the FEDERAL REGISTER on or before November 1 preceding the year for which the adjustment is made.

(v) As an employee in a position compensated solely on a fee basis which is treated, pursuant to section 211(c)(2)(E) of the Act, as a trade or business for purposes of inclusion of the fees in net earnings from self-employment; or

(4) The work is covered under § 404.1021 or § 404.1022.

(b) *Medicare qualified government employment.* Notwithstanding the provisions of paragraph (a) of this section, your work may be covered as Medicare qualified government employment (see § 404.1018b(c) of this subpart).

(c) *Covered transportation service*—(1) *Work for a public transportation system.* If you work for a public transportation system of a State or political subdivision of a State, your work may be covered transportation service if all or part of the system was acquired from private ownership. You must work as an employee of the State or political subdivision in connection with its operation of a public transportation system for your work to be covered transportation service. This paragraph sets out additional conditions that must be met for your work to be covered transportation service. If you work for a public transportation system but your work is not covered transportation service, your work may be covered for social security purposes under an agreement under section 218 of the Act (see subpart M of this part).

(2) *Transportation system acquired in whole or in part after 1936 and before 1951.* All work after 1950 for a public transportation system is covered transportation service if—

(i) Any part of the transportation system was acquired from private ownership after 1936 and before 1951; and

(ii) No general retirement system covering substantially all work in connection with the operation of the transportation system and guaranteed by the State constitution was in effect on December 31, 1950.

(3) *Transportation system operated on December 31, 1950, no part of which was acquired after 1936 and before 1951.* If no part of a transportation system operated by a State or political subdivision on December 31, 1950, was acquired from private ownership after 1936 and

before 1951, work for that public transportation system is not covered transportation service unless performed under conditions described in paragraph (b)(4) of this section.

(4) *Addition after 1950 to existing transportation system.* Work for a public transportation system part of which was acquired from private ownership after 1950 as an addition to an existing transportation system is covered transportation service beginning with the first day of the third calendar quarter following the calendar quarter in which the addition was acquired if—

(i) The work is performed by an employee who—

(A) Worked in employment in connection with the operation of the addition before the addition was acquired by the State or political subdivision; and

(B) Became an employee of the State or political subdivision in connection with and at the time of its acquisition of the addition;

(ii) On that first day, work performed by that employee is—

(A) Not covered by a general retirement system; or

(B) Covered by a general retirement system which contains special provisions that apply only to employees described in paragraph (c)(4)(i)(B) of this section;

(iii) The existing transportation system was operated by the State or political subdivision on December 31, 1950; and

(iv) Work for the existing transportation system was not covered transportation service because—

(A) No part of the system was acquired from private ownership after 1936 and before 1951; or

(B) The general retirement system described in paragraph (c)(2)(ii) of this section was in effect on December 31, 1950.

(5) *Transportation system acquired after 1950.* All work for a public transportation system is covered transportation service if—

(i) The transportation system was not operated by the State or political subdivision before 1951;

(ii) All or part of the transportation system was first acquired from private ownership after 1950; and

(iii) At the time the State or political subdivision first acquired any part of its transportation system from private ownership, it did not have a general retirement system covering substantially all work performed in connection with the operation of the transportation system.

(6) *Definitions.* (i) The term *general retirement system* means any pension, annuity, retirement, or similar fund or system established by a State or by a political subdivision of a State for employees of the State, the political subdivision, or both. The term does not include a fund or system which covers only work performed in positions connected with the operation of the public transportation system.

(ii) A transportation system (or part of a system) is considered to have been acquired from private ownership by a State or political subdivision if—

(A) Before the acquisition, work performed by employees in connection with the operation of the system (or an acquired part) constituted employment under the Act; and

(B) Some of these employees became employees of the State or political subdivision in connection with and at the time of the acquisition.

(iii) The term *political subdivision* includes an instrumentality of a State, of one or more political subdivisions of a State, or of a State and one or more of its political subdivisions.

[45 FR 20075, Mar. 27, 1980, as amended at 57 FR 59910, 59914, Dec. 17, 1992; 61 FR 38366, July 24, 1996; 69 FR 51556, Aug. 20, 2004]

§ 404.1021 Work for the District of Columbia.

If you work as an employee of the District of Columbia or a wholly owned instrumentality of the District of Columbia, your work is covered as employment unless—

(a) Your work is covered by a retirement system established by a law of the United States; or

(b) You are—

(1) A patient or inmate of a hospital or penal institution and your work is for that hospital or institution;

(2) A student employee (a student nurse, dietitian, or physical or occupational therapist, but not a medical or dental intern or resident in training) of

a District of Columbia hospital, clinic, or medical or dental laboratory;

(3) An employee serving temporarily in case of fire, storm, snow, earthquake, flood, or other similar emergency; or

(4) A member of a board, committee, or council of the District of Columbia paid on a per diem, meeting, or other fee basis.

(c) *Medicare qualified government employment.* If your work is not covered under Social Security, it may be covered as Medicare qualified government employment (see §404.1018b(c) of this subpart).

[45 FR 20075, Mar. 27, 1980, as amended at 57 FR 59914, Dec. 17, 1992]

§404.1022 American Samoa, Guam, or the Commonwealth of the Northern Mariana Islands.

(a) *Work in American Samoa, Guam, or the Commonwealth of the Northern Mariana Islands.* Work in American Samoa, Guam, or the Commonwealth of the Northern Mariana Islands for a private employer is covered as employment the same as in the 50 States. Work done by a resident of the Republic of the Philippines working in Guam on a temporary basis as a nonimmigrant alien admitted to Guam under section 101(a)(15)(H)(ii) of the Immigration and Nationality Act is excluded from coverage regardless of the employer.

(b) *Work for American Samoa or a political subdivision or wholly owned instrumentality of American Samoa.* Work as an officer or employee (including a member of the legislature) of the government of American Samoa, its political subdivisions, or any wholly owned instrumentality of any one or more of these, is covered as employment (unless the work is covered by a retirement system established by a law of the United States). The officer or employee is not considered as an employee of the United States, an agency of the United States, or an instrumentality of the United States, for purposes of title II of the Act. We consider any pay for this work to have been paid by the government of American Samoa, or the political subdivision or the wholly owned instrumentality of American Samoa.

(c) *Work for Guam, the Commonwealth of the Northern Mariana Islands (CNMI), or a political subdivision or wholly owned instrumentality of Guam or the CNMI.* Work as an officer or employee (including a member of the legislature) of the government of the CNMI, its political subdivisions, or any wholly owned instrumentality of any one or more of these, is covered as employment beginning October 1, 2012. Work as an officer or employee (including a member of the legislature) of the government of Guam, its political subdivisions, or any wholly owned instrumentality of any one or more of these, is excluded from coverage as employment. However, the exclusion does not apply to employees classified as temporary or intermittent unless the work is—

(1) Covered by a retirement system established by a law of Guam or the CNMI;

(2) Done by an elected official;

(3) Done by a member of the legislature; or

(4) Done in a hospital or penal institution by a patient or inmate of the hospital or penal institution.

(d) *Medicare qualified government employment.* If your work is not covered under Social Security, it may be covered as Medicare qualified government employment (see §404.1018b(c) of this subpart).

[45 FR 20075, Mar. 27, 1980, as amended at 57 FR 59914, Dec. 17, 1992; 69 FR 51556, Aug. 20, 2004; 79 FR 33684, June 12, 2014]

§404.1023 Ministers of churches and members of religious orders.

(a) *General.* If you are a duly ordained, commissioned, or licensed minister of a church, the work you do in the exercise of your ministry is excluded from employment. However, it is treated as self-employment for social security purposes. If you are a member of a religious order who has not taken a vow of poverty, the same rule applies to the work you do in the exercise of your duties required by that order. If you are a member of a religious order who has taken a vow of poverty, the work you do in the exercise of duties required by the order (the work may be done for the order or for another employer) is covered as employment only if the order or autonomous subdivision

of the order to which you belong has filed an effective election of coverage. The election is made under section 3121(r) of the Code. For the rules on self-employment coverage of ministers and members of religious orders who have not taken vows of poverty, see § 404.1071.

(b) *What is an ordained, commissioned, or licensed minister.* The terms *ordained, commissioned, or licensed* describe the procedures followed by recognized churches or church denominations to vest ministerial status upon qualified individuals. If a church or church denomination has an ordination procedure, the commissioning or licensing of a person as a minister may not make him or her a commissioned or licensed minister for purposes of this subpart. Where there is an ordination procedure, the commissioning or licensing must be recognized as having the same effect as ordination and the person must be fully qualified to exercise all of the ecclesiastical duties of the church or church denomination.

(c) *When is work by a minister in the exercise of the ministry.* (1) A minister is working in the exercise of the ministry when he or she is—

(i) Ministering sacerdotal functions or conducting religious worship (other than as described in paragraph (d)(2) of this section); or

(ii) Working in the control, conduct, and maintenance of a religious organization (including an integral agency of a religious organization) under the authority of a religious body constituting a church or church denomination.

(2) The following rules are used to decide whether a minister's work is in the exercise of the ministry:

(i) Whether the work is the conduct of religious worship or the ministration of sacerdotal functions depends on the tenets and practices of the religious body which is his or her church or church denomination.

(ii) Work in the control, conduct, and maintenance relates to directing, managing, or promoting the activities of the religious organization. Any religious organization is considered to be under the authority of a religious body constituting a church or church denomination if it is organized and dedicated to carrying out the tenets and principles of a faith according to either the requirements or sanctions governing the creation of institutions of the faith.

The term *religious organization* has the same meaning and application as is given to the term for income tax purposes under the Code.

(iii) If a minister is working in the conduct of religious worship or the ministration of sacerdotal functions, the work is in the exercise of the ministry whether or not it is performed for a religious organization. (See paragraph (d)(2) of this section for an exception to this rule.)

Example: M, a duly ordained minister, is engaged to work as chaplain at a privately owned university. M spends his entire time working as chaplain. This includes the conduct of religious worship, offering spiritual counsel to the university students, and teaching a class in religion. M is working in the exercise of the ministry.

(iv) If a minister is working for an organization which is operated as an integral agency of a religious organization under the authority of a religious body constituting a church or church denomination, all work by the minister in the conduct of religious worship, in the ministration of sacerdotal functions, or in the control, conduct, and maintenance of the organization is in the exercise of the ministry.

Example: M, a duly ordained minister, is engaged by the N Religious Board as director of one of its departments. M performs no other service. The N Religious Board is an integral agency of O, a religious organization operating under the authority of a religious body constituting a church denomination. M is working in the exercise of the ministry.

(v) If a minister, under an assignment or designation by a religious body constituting a church, works for an organization which is neither a religious organization nor operated as an integral agency of a religious organization, all service performed by him or her, even though the service may not involve the conduct of religious worship or the ministration of sacerdotal functions, is in the exercise of the ministry.

Example: M, a duly ordained minister, is assigned by X, the religious body constituting M's church, to perform advisory service to Y company in connection with the publication

of a book dealing with the history of M's church denomination. Y is neither a religious organization nor operated as an integral agency of a religious organization. M performs no other service for X or Y. M is working in the exercise of the ministry.

(vi) If a minister is working for an organization which is neither a religious organization nor operated as an integral agency of a religious organization and the work is not performed under an assignment or designation by ecclesiastical superiors, then only the work done by the minister in the conduct of religious worship or the ministration of sacerdotal functions is in the exercise of the ministry. (See paragraph (d)(2) of this section for an exception to this rule.)

Example: M, a duly ordained minister, is engaged by N University to teach history and mathematics. M does no other work for N although from time to time M performs marriages and conducts funerals for relatives and friends. N University is neither a religious organization nor operated as an integral agency of a religious organization. M is not working for N under an assignment by his ecclesiastical superiors. The work performed by M for N University is not in the exercise of the ministry. However, service performed by M in performing marriages and conducting funerals is in the exercise of the ministry.

(d) *When is work by a minister not in the exercise of the ministry.* (1) Work performed by a duly ordained, commissioned, or licensed minister of a church which is not in the exercise of the ministry is not excluded from employment.

(2) Work performed by a duly ordained, commissioned, or licensed minister of a church as an employee of the United States, or a State, territory, or possession of the United States, or the District of Columbia, or a foreign government, or a political subdivision of any of these, is not in the exercise of the ministry, even though the work may involve the ministration of sacerdotal functions or the conduct of religious worship. For example, we consider service performed as a chaplain in the Armed Forces of the United States to be work performed by a commissioned officer and not by a minister in the exercise of the ministry. Also, service performed by an employee of a State as a chaplain in a State prison is considered to be performed by a civil servant of the State and not by a minister in the exercise of the ministry.

(e) *Work in the exercise of duties required by a religious order.* Work performed by a member of a religious order in the exercise of duties required by the order includes all duties required of the member of the order. The nature or extent of the work is immaterial so long as it is service which the member is directed or required to perform by the member's ecclesiastical superiors.

§ 404.1024 Election of coverage by religious orders.

A religious order whose members are required to take a vow of poverty, or any autonomous subdivision of that religious order, may elect to have social security coverage extended to the work performed by its members in the exercise of duties required by that order or subdivision. The rules on the election of coverage by these religious orders are described in 26 CFR 31.3121(r). The rules on determining the wages of members of religious orders for which an election of coverage has been made are described in § 404.1046.

§ 404.1025 Work for religious, charitable, educational, or certain other organizations exempt from income tax.

(a) *After 1983.* Work done after 1983 by an employee in the employ of a religious, charitable, educational, or other organization described in section 501(c)(3) of the Code which is exempt from income tax under section 501(a) of the Code is covered as employment unless the work is for a church or church-controlled organization that has elected to have services performed by its employees excluded (see § 404.1026). (See § 404.1059(b) for special wage rule.)

(b) *Before 1984.* Work described in paragraph (a) of this section which was done before 1984 is excluded from employment. However, the exclusion does not apply to work done during the period for which a form SS–15, Certificate Waiving Exemption From Taxes Under the Federal Insurance Contributions Act, was filed (or was deemed to have been filed) with the Internal Revenue Service.

[50 FR 36573, Sept. 9, 1985]

§ 404.1026 Work for a church or qualified church-controlled organization.

(a) *General.* If you work for a church or qualified church-controlled organization, as described in this section, your employer may elect to have your services excluded from employment. You would then be considered to be self-employed and special conditions would apply to you. See § 404.1068(f) for those special conditions. The employer's election of the exclusion must be made with the Internal Revenue Service in accordance with Internal Revenue Service procedures and must state that the church or church-controlled organization is opposed for religious reasons to the payment of Social Security employment taxes. The exclusion applies to current and future employees. If you work in an unrelated trade or business (within the meaning of section 513(a) of the Code) of the church or church-controlled organization, the exclusion does not apply to your services.

(b) *What is a church.* For purposes of this section the term *church* means a church, a convention or association of churches, or an elementary or secondary school which is controlled, operated, or principally supported by a church or by a convention or association of churches.

(c) *What is a qualified church-controlled organization.* For purposes of this section the term *qualified church-controlled organization* means any church-controlled organization exempt from income tax under section 501(c)(3) of the Code but does *not* include an organization which:

(1) Offers goods, services, or facilities for sale to the general public, other than on an incidental basis, or for other than a nominal charge which is substantially less than the cost of providing such goods, services, or facilities; and

(2) Normally receives more than 25 percent of its support from either governmental sources or receipts from admissions, sales of merchandise, performance of services or furnishing of facilities other than in an unrelated trade or business, or both.

[50 FR 36573, Sept. 9, 1985, as amended at 55 FR 7309, Mar. 1, 1990]

§ 404.1027 Railroad work.

We exclude from employment any work you do as an employee or employee representative as described in the Railroad Retirement Tax Act. However, railroad compensation can be counted for social security purposes under the conditions described in subpart O of this part.

§ 404.1028 Student working for a school, college, or university.

(a) For purposes of this section, a *school, college, or university* has its usual accepted meaning. It does not, however, include any school, college, or university that is an instrumentality or integral part of a State or a political subdivision of a State for which work can only be covered by an agreement under section 218 of the Act. (See subpart M of this part.)

(b) If you are a student, any work you do as an employee of a school, college or university is excluded from employment, if you are enrolled in and regularly attending classes at that school, college, or university. The exclusion also applies to work you do for a private nonprofit auxiliary organization of the school, college, or university if it is organized and operated exclusively for the benefit of, to perform functions of, or to carry out the purposes of the school, college, or university. The organization must be operated, supervised, or controlled by, or in connection with, the school, college, or university.

(c) Whether you are a student for purposes of this section depends on your relationship with your employer. If your main purpose is pursuing a course of study rather than earning a livelihood, we consider you to be a student and your work is not considered employment.

§ 404.1029 Student nurses.

If you are a student nurse, your work for a hospital or nurses training school is excluded from employment if you are enrolled and regularly attending classes in a nurses training school which is chartered or approved under State law.

§404.1030 Delivery and distribution or sale of newspapers, shopping news, and magazines.

(a) *If you are under age 18.* Work you do before you reach age 18 delivering or distributing newspapers or shopping news is excluded from employment. This does not include delivery or distribution to some point for further delivery or distribution by someone else. If you make house-to-house delivery or sale of newspapers or shopping news (including handbills and similar kinds of advertising material), your work is not covered while you are under age 18. Related work such as assembling newspapers is also excluded.

(b) *If you are any age.* No matter how old you are, work you do in connection with and at the time of the sale of newspapers or magazines to consumers is excluded from employment if there is an arrangement under which—

(1) You are to sell the newspapers or magazines at a fixed price; and

(2) Your pay is the difference between the fixed selling price and the amount you are charged for the newspapers or magazines (whether or not you are guaranteed a minimum amount of compensation or receive credit for unsold newspapers or magazines).

(c) *If you are age 18 or older.* If you have attained age 18, you are self-employed if you work under the arrangement described in paragraph (b) of this section. See §404.1068(b).

§404.1031 Fishing.

(a) If you work on a boat engaged in catching fish or other forms of aquatic animal life, your work is not employment if you have an arrangement with the owner or operator of the boat which provides for all of the following:

(1) You do not receive any cash pay (other than as provided in paragraph (a)(2) of this section).

(2) You receive a share of the catch or a share of the proceeds from the sale of the catch.

(3) The amount of your share depends on the size of the catch.

(4) The operating crew of the boat (or each boat from which you receive a share if the fishing operation involves more than one boat) is normally made up of fewer than 10 individuals.

(b) Work excluded from employment under this section is considered to be self-employment (§404.1068(e)).

§404.1032 Work for a foreign government.

If you work as an employee of a foreign government in any capacity, your work is excluded from employment. If you are a citizen of the United States and work in the United States as an employee of a foreign government, you are considered to be self-employed (§404.1068(d)).

§404.1033 Work for a wholly owned instrumentality of a foreign government.

(a) If you work as an employee of an instrumentality of a foreign government, your work is excluded from employment if—

(1) The instrumentality is wholly owned by the foreign government;

(2) Your work is similar to work performed in foreign countries by employees of the United States Government or its instrumentalities; and

(3) The Secretary of State certifies to the Secretary of the Treasury that the foreign government grants an equivalent exemption for services performed in the foreign country by employees of the United States Government or its instrumentalities.

(b) Your work will not be excluded under this section if any of the conditions in paragraph (a) of this section are not met.

(c) If you are a citizen of the United States and work in the United States as an employee of an instrumentality of a foreign government and the conditions in paragraph (a) of this section are met, you are considered to be self-employed (§404.1068(d)).

§404.1034 Work for an international organization.

(a) If you work as an employee of an international organization entitled to enjoy privileges, exemptions, and immunities as an international organization under the International Organizations Immunities Act (59 Stat. 669), your work is excluded from employment except as described in paragraphs

(b) and (c) of this section. The organization must meet the following conditions:

(1) It must be a public international organization in which the United States participates under a treaty or authority of an act of Congress authorizing, or making an appropriation for, participation.

(2) It must be designated by executive order to be entitled to enjoy the privileges, exemptions, and immunities provided in the International Organizations Immunities Act.

(3) The designation must be in effect, and all conditions and limitations in the designation must be met.

(b) Your work will not be excluded under this section if any of the conditions in paragraph (a) of this section are not met.

(c) Your work performed after December 31, 1994 will not be excluded under this section if you perform service in the employ of an international organization pursuant to a transfer from a Federal agency under section 3582 of title 5 of the United States Code and

(1) Immediately before such transfer you performed service with a Federal agency which was covered as employment; and

(2) You would be entitled, upon separation from the international organization and proper application, to reemployment with the Federal agency under section 3582.

(d) If you are a citizen of the United States and work in the United States as an employee of an international organization that meets the conditions in paragraph (a) of this section and you are not subject to coverage based on paragraph (c) of this section, you are considered to be self-employed (§ 404.1068(d)).

[45 FR 20075, Mar. 27, 1980, as amended at 61 FR 38366, July 24, 1996]

§ 404.1035 Work for a communist organization.

If you work as an employee of an organization which is registered, or which is required by a final order of the Subversive Activities Control Board to register under the Internal Security Act of 1950 as a communist action, communist-front, or communist-infiltrated organization, your work is excluded from employment. The exclusion is effective with the calendar year in which the organization is registered or the final order is in effect.

§ 404.1036 Certain nonresident aliens.

(a) *Foreign students.* (1) Foreign students (nonimmigrant aliens) may be temporarily in the United States under subparagraph (F) of section 101(a)(15) of the Immigration and Nationality Act to attend a school or other recognized place of study approved by the Attorney General. On-campus work or work under permission granted by the Immigration and Naturalization Service which is done by these students is excluded from employment. Other work done by these foreign students is not excluded from employment under this section.

(2) Foreign students (nonimmigrant aliens) may be temporarily in the United States under subparagraph (M) of section 101(a)(15) of the Immigration and Nationality Act to pursue a vocational or nonacademic technical education approved by the Attorney General. Work done by these students to carry out the purpose for which they were admitted is excluded from employment. Other work done by these foreign students is not excluded from employment under this section.

(b) *Exchange visitors.* (1) Exchange visitors (nonimmigrant aliens) may be temporarily in the United States under subparagraph (J) of section 101(a)(15) of the Immigration and Nationality Act to participate in exchange visitor programs designated by the Director of the United States Information Agency. Work done by these exchange visitors to carry out the purpose for which they were admitted and for which permission has been granted by the sponsor, is excluded from employment. Other work done by these exchange visitors is not excluded from employment under this section.

(2) Exchange visitors (nonimmigrant aliens) may be temporarily in the United States under subparagraph (Q) of section 101(a)(15) of the Immigration and Nationality Act to participate in an international cultural exchange program approved by the Attorney General. Effective October 1, 1994, work

done by these exchange visitors to carry out the purpose for which they were admitted is excluded from employment. Other work done by these exchange visitors is not excluded from employment under this section.

(c) *Spouse and children.* Work done by a foreign student's or exchange visitor's alien spouse or minor child who is also temporarily in the United States under subparagraph (F), (J), (M), or (Q) of section 101(a)(15) of the Immigration and Nationality Act is not excluded from employment under this section unless that spouse or child and the work that is done meets the conditions of paragraph (a) or (b) of this section.

[61 FR 38366, July 24, 1996]

§ 404.1037 Work on or in connection with a non-American vessel or aircraft.

If you work as an employee within the United States on or in connection with (as explained in § 404.1004(b)(8)) a vessel or aircraft that is not an American vessel (as defined in § 404.1004(b)(3)) or American aircraft (as defined in § 404.1004(b)(2)), your work is excluded from employment if—

(a) You are not a citizen of the United States or your employer is not an American employer (as defined in § 404.1004(b)(1)); and

(b) You are employed on and in connection with (as explained in § 404.1004(b)(7)) the vessel or aircraft when outside the United States.

§ 404.1038 Domestic employees under age 18.

Domestic services you perform in a private home of your employer are excluded from employment, regardless of the amount earned, in any year in which you are under age 18 if domestic service is not your principal occupation. The exclusion applies to the entire year if you are under age 18 in any part of the year. See § 404.1057.

[61 FR 38366, July 24, 1996]

EXEMPTION FROM SOCIAL SECURITY BY REASON OF RELIGIOUS BELIEF

§ 404.1039 Employers (including partnerships) and employees who are both members of certain religious groups opposed to insurance.

(a) You and your employer (or, if the employer is a partnership, each of its partners) may file applications with the Internal Revenue Service for exemption from your respective shares of the Federal Insurance Contributions Act taxes on your wages paid by that employer if you and your employer (or, if the employer is a partnership, each of its partners)—

(1) Are members of a recognized religious sect or division of the sect; and

(2) Adhere to the tenets or teachings of the sect or division of the sect and for that reason are conscientiously opposed to receiving benefits from any private or public insurance that—

(i) Makes payment in the event of death, disability, old-age, or retirement; or

(ii) Makes payment for the cost of, or provides services for, medical care including the benefits of any insurance system established by the Act.

(b) Both your application and your employer's application (or, if your employer is a partnership, each partner's application) must be filed with and approved by the Internal Revenue Service pursuant to section 3127 of the Internal Revenue Code. An application must contain or be accompanied by the applicant's waiver of all benefits and payments under title II and part A of title XVIII of the Act. See § 404.305 for the effect of the filing of the waiver and the granting of the exemption.

(c) Regardless of whether the applicant meets all these conditions, the application will not be approved unless we find that—

(1) The sect or division of the sect has established tenets or teachings which cause the applicant to be conscientiously opposed to the types of insurance benefits described in paragraph (a)(2) of this section; and

(2) For a substantial period of time it has been the practice for members of the sect or division of the sect to make provision for their dependent members

that is reasonable in view of their general level of living; and

(3) The sect or division of the sect has been in existence continuously since December 31, 1950.

(d) An application for exemption will be approved by the Internal Revenue Service only if no benefit or payment under title II or part A of title XVIII of the Act became payable (or, but for section 203 or section 222(b) of the Act, would have become payable) to the applicant at or before the time of the filing of the application for exemption.

(e) The tax exemption ceases to be effective with respect to wages paid beginning with the calendar quarter in which either the employer (or if the employer is a partnership, any of its partners) or the employee involved does not meet the requirements of paragraph (a) of this section or the religious sect or division of the sect is found by us to no longer meet the requirements of paragraph (c) of this section. If the tax exemption ceases to be effective, the waiver of the right to receive Social Security and Medicare Part A benefits will also no longer be effective. Benefits may be payable based upon the wages of the individual, whose exempt status was terminated, for and after the calendar year following the calendar year in which the event occurred upon which the cessation of the exemption is based. Benefits may be payable based upon the self-employment income of the individual whose exempt status was terminated for and after the taxable year in which the event occurred upon which the cessation of the exemption is based.

[58 FR 64889, Dec. 10, 1993]

WAGES

§ 404.1041 Wages.

(a) The term *wages* means remuneration paid to you as an employee for employment unless specifically excluded. Wages are counted in determining your entitlement to retirement, survivors', and disability insurance benefits.

(b) If you are paid wages, it is not important what they are called. Salaries, fees, bonuses and commissions on sales or on insurance premiums are wages if they are remuneration paid for employment.

(c) The way in which you are paid is unimportant. Wages may be paid on the basis of piecework or a percentage of the profits. Wages may be paid on an hourly, daily, weekly, monthly, or yearly basis. (See § 404.1056 for special rules for agricultural labor.)

(d) Your wages can be in any form. You can be paid in cash or something other than cash, for example, in goods or clothing. (See paragraphs (e) and (f) of this section for kinds of employment where cash payments alone are considered wages and § 404.1043(b) concerning the value of meals and lodging as wages.) If your employer pays you cash for your meals and lodging on a regular basis as part of your employment, these payments may be considered wages. Payments other than cash may be counted as wages on the basis of the fair value of the items when paid.

(e) In certain kinds of employment, cash payments alone count as wages. These types of employment are agricultural labor, domestic services, and services not in the course of the employer's trade or business.

(f) To count as wages, payments for services performed by home workers who are employees as described in § 404.1008(d) must be in cash and must amount to $100 or more in a calendar year. Once this cash pay test is met, all remuneration paid, whether in cash or kind, is also wages.

[45 FR 20075, Mar. 27, 1980, as amended at 55 FR 7309, Mar. 1, 1990]

§ 404.1042 Wages when paid and received.

(a) *In general.* Wages are received by an employee at the time they are paid by the employer to the employee. Wages are paid by an employer at the time that they are actually or constructively paid unless they are deemed to be paid later (as described in paragraph (c)(3) of this section).

(b) *Constructive payment.* Wages are constructively paid when they are credited to the account of, or set aside for, an employee so that they may be drawn upon by the employee at any time although not then actually received. To be a payment—

(1) The wages must be credited to or set aside for the employee and must be made available without restriction so that they may be drawn upon at any time; or

(2) The employer must intend to pay or to set aside or credit, and have the ability to pay wages when due to the employee, and failure of the employer to credit or set aside the wages is due to clerical error or mistake in the mechanics of payment, and because of the clerical error or mistake the wages are not actually available at that time.

(c) *Deemed payment.* (1) The first $100 of cash paid, either actually or constructively, by an employer to an employee in a calendar year is considered paid at the time that the amount of the cash payment totals $100 for the year in the case of pay for—

(i) Work not in the course of the employer's trade or business (non-business work);

(ii) Work by certain home workers; and

(iii) Work for an organization exempt from income tax under section 501 of the Code.

(2) We also apply this rule to domestic work in a private home of the employer, except see § 404.1057(a)(1) for the applicable dollar amount.

(3) Cash of less than $150 that an employer pays to an employee in a calendar year, either actually or constructively, for agricultural labor is considered paid at the earliest of—

(i) The time in the calendar year that the employee's pay totals $150; or

(ii) The 20th day of the calendar year on which the employee works for cash pay computed on a time basis.

(4) If an employer pays cash to an employee for two or more of the kinds of work referred to in paragraph (c)(1) of this section, we apply the provisions of this paragraph to the pay for each kind of work.

(d) *Employee tax deductions.* We consider employee tax deductions under section 3101 of the Code to be part of the employee's wages and consider them to be paid at the time of the deduction. We consider other deductions from wages to be wages paid at the time of the deduction. It is immaterial that the deductions are required or permitted by an act of Congress or the law of any State.

(e) *Tips.* (1) Tips received by an employee in the course of employment, that are considered to be *wages*, are deemed to be paid at the time the employee reports the tips to the employer in a written statement as provided under section 6053(a) of the Code. Tips that are not reported are deemed to be paid to the employee at the time they are received by the employee.

(2) We consider tips to be received in the course of employment whether they are received by the employee from the employer or from another person. Only tips employees receive and keep for themselves are considered to be the employees' pay. If employees split tips, each employee who receives part of the tip receives tips in the course of employment.

(f) *Payments under nonqualified deferred compensation plans.* Amounts that an employee is entitled to receive under nonqualified deferred compensation plans (plans that do not qualify for special tax treatment under the Code) are creditable as wages for Social Security purposes at the later of the following times:

(1) When the services are performed; or

(2) When there is no longer a substantial risk of forfeiture (as defined in section 83 of the Code) of the employee's rights to the deferred compensation.

Any amounts taken into account as wages by this paragraph (and the income attributable thereto) will not thereafter be treated as wages for Social Security purposes.

[45 FR 20075, Mar. 27, 1980, as amended at 55 FR 7309, Mar. 1, 1990; 61 FR 38366, July 24, 1996]

§ 404.1043 Facilities or privileges—meals and lodging.

(a) *Excluding the value of employer provided facilities or privileges from employee gross income prior to January 1, 1985.* (1) Generally, the facilities or privileges that an employer furnished an employee prior to January 1, 1985 are not wages if the facilities or privileges—

(i) Were of relatively small value; and

(ii) Were offered or furnished by the employer merely as a means of promoting the health, good will, contentment, or efficiency of the employees.

(2) The term *facilities or privileges* for the period prior to January 1, 1985 is intended to include such items as entertainment, medical services, and so-called *courtesy* discounts on purchases.

(b) *Meals and lodging*. The value of the meals and lodging furnished to an employee by an employer for reasons of the employer's convenience is not wages if—

(1) The meals are provided at the employer's place of business; and

(2) The employee, in the case of lodging, is required to accept lodging on the employer's business premises as a condition of employment.

[52 FR 29662, Aug. 11, 1987]

§ 404.1044 Vacation pay.

We consider your salary while on vacation, or a *vacation allowance* paid by your employer, to be wages.

§ 404.1045 Employee expenses.

Amounts that your employer pays you specifically—either as advances or reimbursements—for traveling or for other ordinary and necessary expenses incurred, or reasonably expected to be incurred, in your employer's business are not wages. The employer must identify these travel and other expenses either by making a separate payment or by specifically stating the separate amounts if both wages and expense allowances are combined in a single payment.

§ 404.1046 Pay for work by certain members of religious orders.

(a) If you are a member of a religious order who has taken a vow of poverty (§ 404.1023), and the order has elected Social Security coverage under section 3121(r) of the Code, your wages are figured in a special way. Your wages, for Social Security purposes, are the fair market value of any board, lodging, clothing, and other items of value furnished to you by the order, or furnished to the order on your behalf by another organization or person under an agreement with the order. See paragraph (b) of this section if you perform services for a third party. The order must report at least $100 a month for each active member. If the fair market value of items furnished to all members of a religious order does not vary significantly, the order may consider all members to have a uniform wage.

(b) If you perform services for a third party, the following rules apply:

(1) If you perform services for another agency of the supervising church or an associated institution, any amounts paid based on such services, whether paid directly to you or to the order, do not count on wages. Only wages figured under (a) above, are counted.

(2) If you perform services in a secular setting as an employee of a third party not affiliated or associated with the supervising church or an associated institution, any amounts paid based on such services, whether paid directly to you or to the order, count as wages paid to you by the third party. These wages are in addition to any wages counted under paragraph (a) of this section.

[55 FR 7309, Mar. 1, 1990; 55 FR 17530, Apr. 25, 1990]

§ 404.1047 Annual wage limitation.

Payments made by an employer to you as an employee in a calendar year that are more than the annual wage limitation are not wages. The annual wage limitation is:

Calendar year	Wage limitation
1951–54	$3,600
1955–58	4,200
1959–65	4,800
1966–67	6,600
1968–71	7,800
1972	9,000
1973	10,800
1974	13,200
1975	14,100
1976	15,300
1977	16,500
1978	17,700
1979	22,900
1980	25,900
1981	29,700
1982	32,400
1983	35,700
1984	37,800
1985	39,600
1986	42,000
1987	43,800
1988	45,000
1989	48,000
1990	51,300
1991	53,400

Calendar year	Wage limitation
1992	55,500

[52 FR 8249, Mar. 17, 1987, as amended at 57 FR 44098, Sept. 24, 1992]

§ 404.1048 Contribution and benefit base after 1992.

(a) *General.* The contribution and benefit base after 1992 is figured under the formula described in paragraph (b) of this section in any calendar year in which there is an automatic cost-of-living increase in old-age, survivors, and disability insurance benefits. For purposes of this section, the calendar year in which the contribution and benefit base is figured is called the determination year. The base figured in the determination year applies to wages paid after (and taxable years beginning after) the determination year.

(b) *Formula for figuring the contribution and benefit base.* For wages paid after (and taxable years beginning after) the determination year, the contribution and benefit base is the larger of—

(1) The contribution and benefit base in effect for the determination year; or

(2) The amount determined by—

(i) Multiplying the contribution and benefit base in effect for the determination year by the ratio of—

(A) The average of the total wages (as described in paragraph (c) of this section) reported to the Secretary of the Treasury for the calendar year before the determination year to

(B) The average of the total wages reported to the Secretary of the Treasury for the calendar year before the most recent calendar year in which an increase in the contribution and benefit base was enacted or a determination under this section resulting in an increase of the base was made; and

(ii) Rounding the result of the multiplication, if not a multiple of $300, to—

(A) The nearest multiple of $300; or

(B) The next higher multiple of $300 if the result is a multiple of $150.

(c) *Average of the total wages.* The average of the total wages means the amount equal to all remuneration reported as wages on Form W-2 to the Internal Revenue Service for all employees for income tax purposes plus contributions to certain deferred compensation plans described in section 209(k) of the Social Security Act (also reported on Form W-2), divided by the number of wage earners. If both distributions from and contributions to any such deferred compensation plan are reported on Form W-2, we will include only the contributions in the calculation of the average of the total wages. The reported remuneration and deferred compensation contributions include earnings from work not covered under social security and earnings from work covered under social security that are more than the annual wage limitation described in § 404.1047.

[45 FR 20075, Mar. 27, 1980, as amended at 55 FR 7309, Mar. 1, 1990; 57 FR 1382, Jan. 14, 1992]

§ 404.1049 Payments under an employer plan or system.

(a) Payments to, or on behalf of, you or any of your dependents under your employer's plan or system are excluded from wages if made because of your or your dependents'—

(1) Medical or hospitalization expenses connected with sickness or accident disability; or

(2) Death, except that the exclusion does not apply to payments for group-term life insurance to the extent that the payments are includible in the gross income of the employee under the Internal Revenue Code of 1986, effective with respect to group-term life insurance coverage in effect after 1987 for employees whose employment, for the employer (or successor of that employer) providing the insurance coverage, does not end prior to 1989. Such payments are wages, however, if they are for coverage for an employee who was separated from employment prior to January 1, 1989, if the payments are for any period for which the employee is reemployed by the employer (or successor of that employer) after the date of separation.

(b) Payments to you or your dependents under your employer's plan at or after the termination of your employment relationship because of your death or retirement for disability are excluded from wages.

(c) Payments made after 1983 to you or your dependents under your employer's plan at or after the termination of your employment relationship because of retirement after reaching an age specified in the plan or in a pension plan of the employer are not excluded from wages unless—

(1) The payments are to or from a trust or annuity plan of your employer as described in § 404.1052; or

(2) An agreement to retire was in effect on March 24, 1983, between you and your employer and the payments made after 1983 under a nonqualified deferred compensation plan (see § 404.1042(f)) are based on services performed for your employer before 1984.

(d) The plan or system established by the employer must provide for the employees generally or for a class or classes of employees. The plan or system may also provide for these employees' dependents. Payments under a plan or system established only for your dependents are not excluded from wages. The plan or system established by the employer can provide for payments on account of one or more of the items in paragraphs (a) and (b) of this section.

(e) For purposes of this section, your dependents include your husband or wife, children, and any other members of your immediate family.

(f) It does not make any difference that the benefit payments are considered in arriving at the amount of your pay or are required by the employment agreement.

[45 FR 20075, Mar. 27, 1980, as amended at 50 FR 1832, Jan. 14, 1985; 55 FR 7310, Mar. 1, 1990; 55 FR 17530, Apr. 25, 1990]

§ 404.1050 Retirement payments.

Payments made after 1983 to you (including any amount paid by an employer for insurance or annuities) on account of your retirement for age are not excluded from wages unless—

(a) The payments are to or from a trust or annuity plan of your employer as described in § 404.1052; or

(b) The payments satisfy the requirements described in § 404.1049(c)(2).

[55 FR 7310, Mar. 1, 1990]

§ 404.1051 Payments on account of sickness or accident disability, or related medical or hospitalization expenses.

(a) We do not include as wages any payment that an employer makes to you, or on your behalf, on account of your sickness or accident disability, or related medical or hospitalization expenses, if the payment is made more than 6 consecutive calendar months following the last calendar month in which you worked for that employer. Payments made during the 6 consecutive months are included as wages.

(b) The exclusion in paragraph (a) of this section also applies to any such payment made by a third party (such as an insurance company). However, if you contributed to your employer's sick pay plan, that portion of the third party payments attributable to your contribution is not wages.

(c) Payments of medical or hospitalization expenses connected with sickness or accident disability are excluded from wages beginning with the first payment only if made under a plan or system of your employer as explained in § 404.1049(a)(1).

(d) Payments under a worker's compensation law are not wages.

[55 FR 7310, Mar. 1, 1990]

§ 404.1052 Payments from or to certain tax-exempt trusts or payments under or into certain annuity plans.

(a) We do not include as wages any payment made—

(1) Into a tax-exempt trust or annuity plan by your employer on behalf of you or your beneficiary; or

(2) From a tax-exempt trust or under an annuity plan to, or on behalf of, you or your beneficiary.

(b) The trust must be exempt from tax under sections 401 and 501(a) of the Code, and the annuity plan must be a plan described in section 403(a) of the Code when payment is made.

(c) The exclusion does not apply to payments to an employee of the trust for work done as an employee of the trust.

[55 FR 7310, Mar. 1, 1990]

§ 404.1053 "Qualified benefits" under a cafeteria plan.

We do not include as wages any *qualified benefits* under a cafeteria plan as described in section 125 of the Code if such payment would not be treated as wages without regard to such plan and it is reasonable to believe that (if section 125 applied for purposes of this section) section 125 would not treat any wages as constructively received. This includes any *qualified benefit* made to you, or on your behalf, pursuant to a salary reduction agreement between you and your employer. The Internal Revenue Service decides whether any plan is a cafeteria plan under section 125 of the Code and whether any benefit under the plan is a *qualified benefit*.

[55 FR 7310, Mar. 1, 1990]

§ 404.1054 Payments by an employer of employee's tax or employee's contribution under State law.

(a) We exclude as wages any payment by an employer (described in paragraph (b) of this section) that is not deducted from the employee's salary (or for which reimbursement is not made by the employee) of either—

(1) The tax imposed by section 3101 of the Code (employee's share of *Social Security tax*); or

(2) Any payment required from an employee under a State unemployment compensation law.

(b) The payments described in paragraph (a) of this section are not included as wages only if they are made by an employer on behalf of an employee employed in—

(1) Domestic service in the private home of the employer; or

(2) Agricultural labor.

[55 FR 7310, Mar. 1, 1990]

§ 404.1055 Payments for agricultural labor.

(a) *When cash payments are not wages.* We do not include as wages your cash payments in a calendar year after 1987 from an employer for agricultural labor (see § 404.1056) if your employer's total expenditures for agricultural labor are less than $2500 in that year and your employer paid you less than $150 cash remuneration in that year for your agricultural labor.

(b) *Exclusions for noncash payments and payments for seasonal agricultural labor.* (1) Noncash payments for agricultural labor are not wages.

(2) Your cash payments in a calendar year from an employer for agricultural labor are not wages, irrespective of your employer's total annual expenditures for agricultural labor, if you are a hand harvest laborer (*i.e.*, seasonal agricultural labor), and—

(i) Your employer paid you less than $150 in that year;

(ii) You are paid on a piece rate basis in an operation which has been, and is customarily and generally recognized in the region of employment as paying on a piece rate basis;

(iii) You commute daily from your permanent residence to the farm on which you are so employed; and,

(iv) You were employed in agriculture less than 13 weeks during the previous calendar year.

Example: In 1988, A (not a hand harvest laborer) performs agricultural labor for X for cash pay of $144 in the year. X's total agricultural labor expenditures for 1988 are $2,450. Neither the $150 cash-pay test nor the $2,500 expenditures test is met. Therefore, X's payments to A are not wages.

(c) *When cash-pay is creditable as wages.* (1) If you receive cash pay from an employer for services which are agricultural labor and for services which are not agricultural labor, we count only the amounts paid for agricultural labor in determining whether cash payments equal or exceed $150. If the amounts paid are less than $150, we count only those amounts paid for agricultural labor in determining if the $2500 expenditure test is met.

Example: Employer X operates a store and also operates a farm. Employee A, who regularly works in the store, works on X's farm when additional help is required for the farm activities. In calendar year 1988, X pays A $140 cash for agricultural labor performed in that year, and $2,260 for work in connection with the operation of the store. Additionally, X's total expenditures for agricultural labor in 1988 were $2,010. Since the cash payments by X to A in the calendar year 1988 for agricultural labor are less than $150, and total agricultural labor expenditures were under $2,500, the $140 paid by X to A for agricultural labor is not wages. The $2,260 paid for work in the store is wages.

(2) The amount of cash pay for agricultural labor that is creditable to an individual is based on cash paid in a calendar year rather than on amounts earned during a calendar year.

(3) If you receive cash pay for agricultural labor in any one calendar year from more than one employer, we apply the $150 cash-pay test and $2,500 total expenditures test to each employer.

(d) *Application of the $150 cash-pay and 20-day tests prior to 1988.* (1) For the time period prior to 1988, we apply either the $150 a year cash-pay test or the 20-day test. Cash payments are wages if you receive $150 or more from an employer for agricultural labor or under the 20-day test if you perform agricultural labor for which cash pay is computed on a time basis on 20 or more days during a calendar year. For purposes of the 20-day test, the amount of the cash pay is immaterial, and it is immaterial whether you also receive payments other than cash or payments that are not computed on a time basis. If cash paid to you for agricultural labor is computed on a time basis, the payments are not wages unless they are paid in a calendar year in which either the 20-day test or the $150 cash-pay test is met.

(2) [Reserved]

[57 FR 59914, Dec. 17, 1992, as amended at 61 FR 38367, July 24, 1996; 70 FR 41955, July 21, 2005]

§ 404.1056 Explanation of agricultural labor.

(a) *What is agricultural labor.* (1) If you work on a farm as an employee of any person, you are doing agricultural labor if your work has to do with—

(i) Cultivating the soil;

(ii) Raising, shearing, feeding, caring for, training or managing livestock, bees, poultry, fur-bearing animals or wildlife; or

(iii) Raising or harvesting any other agricultural or horticultural commodity.

(2) If you work on a farm as an employee of any person in connection with the production or harvesting of maple sap, the raising or harvesting of mushrooms, or the hatching of poultry, you are doing agricultural labor. If you work in the processing of maple sap into maple syrup or maple sugar you are not doing agricultural labor even though you work on a farm. Work in a mushroom cave or poultry hatchery is agricultural labor only if the cave or hatchery is operated as part of a farm.

(3) If you work as an employee of the owner, tenant, or other operator of a farm, you are doing agricultural labor if most of your work is done on a farm and is involved with—

(i) The operation, management, conservation, improvement, or maintenance of the farm or its tools or equipment (this may include work by carpenters, painters, mechanics, farm supervisors, irrigation engineers, bookkeepers, and other skilled or semi-skilled workers); or

(ii) Salvaging timber or clearing the land of brush and other debris left by a hurricane.

(4) You are doing agricultural labor no matter for whom or where you work, if your work involves—

(i) Cotton ginning;

(ii) Operating or maintaining ditches, canals, reservoirs, or waterways, if they are used only for supplying and storing water for farm purposes and are not owned or operated for profit; or

(iii) Producing or harvesting crude gum (oleoresin) from living trees or processing the crude gum into gum spirits of turpentine and gum resin (if the processing is done by the original producer).

(5) Your work as an employee in the handling, planting, drying, packing, packaging, processing, freezing, grading, storing, or delivering to storage, to a market or to a carrier for transportation to market, of any agricultural or horticultural commodity is agricultural labor if—

(i) You work for a farm operator or a group of farm operators (other than a cooperative organization);

(ii) Your work involves the commodity in its raw or unmanufactured state; and

(iii) The operator produced most of the commodity you work with during the period for which you are paid, or if you work for a group of operators, all of the commodity you work with during the pay period is produced by that group.

(6) If you do nonbusiness work, it is agricultural labor if you do the work on a farm operated for a profit. A farm is not operated for profit if the employer primarily uses it as a residence or for personal or family recreation or pleasure. (See § 404.1058(a) for an explanation of nonbusiness work.)

(7) The term *farm operator* means an owner, tenant, or other person, in possession of and operating a farm.

(8) Work is not *agricultural labor* if it is done in the employ of a cooperative organization, which includes corporations, joint-stock companies, and associations treated as corporations under the Code. Any unincorporated group of operators is considered to be a cooperative organization if more than 20 operators are in the group at any time during the calendar year in which the work is done.

(9) Processing work which changes the commodity from its raw or natural state is not agricultural labor. An example of this is the extraction of juices from fruits or vegetables. However, work in the cutting and drying of fruits or vegetables does not change the commodity from its raw or natural state and can be agricultural labor.

(10) The term *commodity* means a single agricultural or horticultural product. For example, all apples are a commodity, while apples and oranges are two commodities.

(11) Work connected with the commercial canning or freezing of a commodity is not agricultural labor nor is work done after the delivery of the commodity to a terminal market for distribution for consumption.

(b) *What is a farm.* For purposes of social security coverage, *farm* includes a stock, dairy, poultry, fruit, fur-bearing animal, or truck farm, plantation, ranch, nursery, range or orchard. A farm also includes a greenhouse or other similar structure used mostly for raising agricultural or horticultural products. A greenhouse or other similar structure used mostly for other purposes such as display, storage, making wreaths and bouquets is not a farm.

[45 FR 20075, Mar. 27, 1980. Redesignated at 55 FR 7310, Mar. 1, 1990, as amended at 61 FR 38367, July 24, 1996; 70 FR 41955, July 21, 2005]

§ 404.1057 Domestic service in the employer's home.

(a) *Payments for domestic service*—(1) *The applicable dollar threshold.* We do not include as wages cash payments that an employer makes to you in any calendar year for domestic service in the employer's private home if the cash pay in that calendar year is less than the applicable dollar threshold. The threshold per employer is $1000 in calendar year 1995. In calendar years after 1995, this amount will be subject to adjustment in $100 increments based on the formula in section 215(a)(1)(B)(i) of the Act to reflect changes in wages in the economy. Non-cash payments for domestic service are not counted as wages.

(2) *How evaluation is made.* We apply the applicable dollar threshold described in paragraph (a)(1) of this section based on when the payments are made to you rather than when the pay is earned. To count toward the applicable dollar threshold, payment must be made to you in cash (including checks or other forms of money). We apply the applicable dollar threshold only to services performed as a domestic employee. If an employer pays you for performing other work, the cash pay for the nondomestic work does not count toward the applicable dollar threshold domestic service pay required for the remuneration to count as wages.

(3) *More than one domestic employer.* The applicable dollar threshold as explained in paragraph (a)(1) of this section applies to each employer when you perform domestic services for more than one employer in a calendar year. The wages paid by more than one employer for domestic services may not be combined to decide whether you have been paid the applicable dollar threshold or more in a calendar year. The standard applies to each employee when an employer has two or more domestic employees during a calendar year.

(4) *Rounding dollar amounts for reporting.* For social security purposes, an employer has an option in the way he or she reports cash wages paid for domestic service in his or her private home. The employer may report the actual wages paid or may round the

wages to the nearest dollar. For purposes of rounding to the nearest dollar the cents are disregarded unless it amounts to one-half dollar or more, in which case it will be raised to $1. If an employer uses this method to report a cash payment to you for domestic services in his or her private home in a calendar year, he or she must use the same method to report payments to other employees in that year for similar services.

(b) *What is domestic service.* Domestic service is work of a household nature done by you in or about a private home of the employer. A private home is a fixed place of residence of a person or family. A separate dwelling unit maintained by a person in an apartment house, hotel, or other similar establishment may be a private home. If a house is used primarily for supplying board or lodging to the public as a business enterprise, it is not a private home. In general, services of a household nature in or about a private home include services performed by cooks, waiters, butlers, housekeepers, governessess, maids, valets, baby sitters, janitors, laundresses, furnacemen, caretakers, handymen, gardeners, footmen, grooms, and chauffeurs of automobiles for family use. Pay for these services does not come under this provision unless the services are performed in or about a private home of the employer. Pay for services not of a household nature, such as services performed as a private secretary, tutor, or librarian, even though performed in the employer's home, does not come under this provision.

[45 FR 20075, Mar. 27, 1980; 45 FR 25060, Apr. 14, 1980. Redesignated at 55 FR 7310, Mar. 1, 1990, as amended at 61 FR 38367, July 24, 1996]

§ 404.1058 Special situations.

(a) *Payments for service not in course of employer's trade or business (nonbusiness work) and payments to certain home workers*—(1) *The $100 standard.* We do not include as wages cash pay of less than $100 paid to you in a calendar year by an employer for services not in the course of the employer's trade or business (nonbusiness work) and for services as a home worker as described in § 404.1008(d).

(2) *How evaluation is made.* (i) We apply the $100 standard for a calendar year based on when the payments are made to you rather than when the pay is earned. To count toward the $100 amount, payment must be in cash (including checks or other forms of money). The $100 standard applies to each employer when you perform services not in the course of the employer's trade or business or as a homeworker for two or more employers.

(ii) If the employer has two or more employees, the standard applies to each employee. In applying the $100 standard, we disregard cash payments for any other type of services you perform for the employer.

(iii) The noncash payments an employer pays you for services not in the course of the employer's trade or business are not wages even if the employer has paid you cash wages of $100 or more in the calendar year for services of that type.

(iv) Amounts paid to you as a home worker as described in § 404.1008(d) are not wages unless you are paid $100 or more in cash in a calendar year. If you meet this test, any noncash payments you receive for your services also count as wages.

(v) Amounts paid to you as a home worker in a common-law employment relationship (see § 404.1007) count as wages regardless of amount or whether paid in cash or kind.

(3) *Definitions.* The term *services not in the course of the employer's trade or business* (also called nonbusiness work) means services that do not promote or advance the trade or business of the employer. Services performed for a corporation do not come within this definition. A homeworker is described in § 404.1008(c).

(b) *Nonprofit, income-tax exempt organizations*—(1) *The $100 standard.* We do not include as wages payments of less than $100 in a calendar year made by an employer that is an organization exempt from income tax under section 501 of the Code.

(2) *How evaluation is made.* We apply the $100 standard for a calendar year based on when the payments are made to you rather than when the pay is earned. To figure the $100 amount, both

cash and noncash payments are counted. The $100 standard applies to each employer where you render services for two or more nonprofit, income-tax exempt organizations during a calendar year. The $100 standard also applies to each of you where a nonprofit, income-tax exempt organization has two or more employees. In applying the standard, the tax-exempt status of the employer and not the nature or place of your services is controlling.

(c) *Payments to members of the uniformed services*—(1) *The standard.* We include as the wages of a member of the uniformed services—

(i) Basic pay, as explained in paragraph (c)(3) of this section, for performing the services described in paragraph (a)(1) of §404.1019 of this subpart; or

(ii) Compensation, as explained in paragraph (c)(4) of this section, for performing the services described in paragraph (a)(2) of §404.1019 of this subpart.

(2) *Wages deemed paid.* These following provisions apply to members of the uniformed services who perform services as described in paragraph (a)(1) of §404.1019 of this subpart.

(i) After 1977, a member of the uniformed services is considered to have been paid additional wages of $100 for each $300 of basic pay paid to the individual in a calendar year. The amount of additional wages deemed paid cannot be more than $1,200 for any calendar year. No wages may be deemed paid for units of basic pay which are less than $300.

(ii) Before 1978, a member of the uniformed services is considered to have been paid additional wages of $300 for each calendar quarter after 1956 in which the individual is paid any amount of basic pay.

(3) *Basic pay. Basic pay* means the monthly pay prescribed by 37 U.S.C. 203 (Pay and Allowances for the Uniformed Services) for a member of the uniformed services on active duty or on active duty for training.

(4) *Compensation.* ''Compensation'' refers to the remuneration received for services as a member of a uniformed service, based on regulations issued by the Secretary concerned (as defined in 37 U.S.C. 101(5) under 37 U.S.C. 206(a), where such member is not entitled to the basic pay (as defined by paragraph (3) of this section).

(d) *Payments to volunteers and volunteer leaders in the Peace Corps.* If you are a *volunteer* or *volunteer leader* under the provisions of the Peace Corps Act (22 U.S.C. 2501ff), payments for your services are wages with the exception of amounts in excess of the amounts certified as payable under section 5(*c*) or 6(*1*) of the Peace Corps Act. Amounts certified under those sections are considered to have been paid to the individual at the time the service is performed. See §404.1018(*e*) on coverage of these services.

(e) *Moving expenses.* We do not include as wages amounts paid to, or on behalf of, an employee for moving expenses if it is reasonable to believe that a similar deduction is allowable under section 217 of the Code.

(f) *Payments by employer to survivor or estate of former employee.* We do not include as wages any payment by an employer to a survivor or the estate of a former employee after the calendar year in which the employee died.

(g) *Payments to an employee who is entitled to disability insurance benefits.* We do not include as wages any payments made by an employer to an employee if at the time such payment is made—

(1) The employee is entitled to disability insurance benefits under the Act;

(2) The employee's entitlement to such benefits began before the calendar year in which the employer's payment is made; and

(3) The employee performed no work for the employer in the period in which the payments were paid by such employer (regardless of whether the employee worked in the period the payments were earned).

(h) *Tips.* (1) We include as wages tips received by an employee if—

(i) The tips are paid in cash; and

(ii) The tips amount to $20 or more and are received in the course of employment by an employee in a calendar month.

(2) Cash tips include checks and other forms of money. Tips received in a form other than cash, such as passes, tickets, or other goods are not wages. If an employee works for more than one employer in a calendar month, we

apply the $20 tip test to work done for each employer.

(i) *Payments by employer under group legal services plan*. We do not include as wages any contribution, payment, or service, provided by an employer under a qualified group legal services plan which is excludable from the gross income of an employee, or the employee's spouse or dependents, under section 120 of the Code.

[45 FR 20075, Mar. 27, 1980, as amended at 52 FR 29662, Aug. 11, 1987. Redesignated and amended at 55 FR 7310, Mar. 1, 1990; 57 FR 59914, Dec. 17, 1992]

§ 404.1059 Deemed wages for certain individuals interned during World War II.

(a) *In general*. Persons who were interned during any period of time from December 7, 1941, through December 31, 1946, by the United States Government at a place operated by the Government within the United States for the internment of United States citizens of Japanese ancestry are deemed to have been paid wages (in addition to wages actually paid) as provided in paragraph (c) of this section during any period after attaining age 18 while interned. This provision is effective for determining entitlement to, and the amount of, any monthly benefit for months after December 1972, for determining entitlement to, and the amount of, any lump-sum death payment in the case of a death after December 1972, and for establishing a period of disability.

(b) *Information needed to process deemed wages*. Unless we have already made a determination on deemed wages for a period of internment of an individual, any person applying for a monthly benefit, a recalculation of benefits by reason of this section, or a lump-sum death payment, must submit certain information before the benefit or payment may be computed on the basis of deemed wages. This information is—

(1) The place where the individual worked before internment;

(2) The highest hourly wage before internment;

(3) The place and date of internment;

(4) Date of birth (if not previously furnished);

(5) Whether or not another Federal benefit is being received based wholly or in part upon the period of internment; and

(6) In the case of a woman, her maiden name.

(c) *Amount of deemed wages*. The amount of wages which may be deemed is determined as follows:

(1) *Employed prior to internment*. If the individual was employed before being interned, the deemed wages are the greater of—

(i) The highest actual hourly rate of pay received for any employment before internment, multiplied by 40 for each full week during the period of internment; or

(ii) The Federal minimum hourly rate in effect for the period of internment, multiplied by 40 for each full week during that period.

(2) *Self-employed or not employed prior to internment*. If the individual was self-employed or was not employed before the period of internment, the deemed wages are the Federal minimum hourly rate in effect for that period, multiplied by 40 for each full week during the period.

(d) *When wages are not deemed*. Wages are not deemed under this section—

(1) For any period before the quarter in which the individual attained age 18; or

(2) If a larger benefit is payable without the deemed wages; or

(3) If a benefit based in whole or in part upon internment is determined by any agency of the United States to be payable under any other law of the United States or under a system set up by that agency. However, this exception does not apply in cases where the failure to receive deemed wages reduces the primary insurance amount by 50 cents or less.

(e) *Certification of internment*. The certification concerning the internment is made by the Archivist of the United States or his or her representative. After the internment has been verified, wages are deemed to have been paid to the internee.

[45 FR 20075, Mar. 27, 1980, as amended at 52 FR 29662, Aug. 11, 1987. Redesignated at 55 FR 7310, Mar. 1, 1990]

§ 404.1060 [Reserved]

SELF-EMPLOYMENT

§ 404.1065 Self-employment coverage.

For an individual to have self-employment coverage under social security, the individual must be engaged in a trade or business and have net earnings from self-employment that can be counted as self-employment income for social security purposes. The rules explaining whether you are engaged in a trade or business are in §§ 404.1066 through 404.1077. What are net earnings from self-employment is discussed in §§ 404.1080 through 404.1095. Section 404.1096 describes the net earnings from self-employment that are counted as self-employment income for social security purposes. See § 404.1913 for the effect of a totalization agreement on self-employment coverage. An agreement may exempt an activity from coverage as well as extend coverage to an activity.

[50 FR 36574, Sept. 9, 1985]

§ 404.1066 Trade or business in general.

For you to be covered as a self-employed person for social security purposes, you must be engaged in a trade or business. You can carry on a trade or business as an individual or as a member of a partnership. With some exceptions, the term *trade or business* has the same meaning as it does when used in section 162 of the Code.

§ 404.1068 Employees who are considered self-employed.

(a) *General*. Although we generally exclude services performed by employees from the definition of trade or business, certain types of services are considered a trade or business even though performed by employees. If you perform any of the services described in paragraphs (b) through (f) of this section, you are self-employed for social security purposes. Certain other services described in § 404.1071 (relating to ministers and members of religious orders) and § 404.1073 (relating to certain public officers) may be considered a trade or business even though performed by employees.

(b) *Newspaper vendors*. If you have attained age 18 and perform services as a newspaper vendor that are described in § 404.1030(b), you are engaged in a trade or business.

(c) *Sharefarmers*. If you perform services as a sharefarmer that are described in § 404.1017, you are engaged in a trade or business.

(d) *Employees of a foreign government, an instrumentality wholly owned by a foreign government, or an international organization*. If you are a United States citizen and perform the services that are described in § 404.1032, § 404.1033(a), or § 404.1034(a), you are engaged in a trade or business if the services are performed in the United States and are not covered as employment based upon § 404.1034(c).

(e) *Certain fishermen*. If you perform services as a fisherman that are described in § 404.1031, you are engaged in a trade or business.

(f) *Employees of a church or church-controlled organization that has elected to exclude employees from coverage as employment*. If you perform services that are excluded from employment as described in § 404.1026, you are engaged in a trade or business. Special rules apply to your earnings from those services which are known as church employee income. If you are paid $100 or more in a taxable year by an employer who has elected to have its employees excluded, those earnings are self-employment income (see § 404.1096(c)(1)). In figuring your church employee income you may not reduce that income by any deductions attributable to your work. Your church employee income and deductions may not be taken into account in determining the amount of other net earnings from self-employment. Effective for taxable years beginning on or after January 1, 1990, your church employee income is exempt from self-employment tax under the conditions set forth for members of certain religious groups (see § 404.1075).

[45 FR 20075, Mar. 27, 1980, as amended at 50 FR 36574, Sept. 9, 1985; 58 FR 64889, Dec. 10, 1993; 61 FR 38367, July 24, 1996]

§ 404.1069 Real estate agents and direct sellers.

(a) *Trade or business.* If you perform services after 1982 as a qualified real estate agent or as a direct seller, as defined in section 3508 of the Code, you are considered to be engaging in a trade or business.

(b) *Who is a qualified real estate agent.* You are a qualified real estate agent as defined in section 3508 of the Code if you are a salesperson and—

(1) You are a licensed real estate agent;

(2) Substantially all of the earnings (whether or not paid in cash) for the services you perform as a real estate agent are directly related to sales or other output (including the performance of services) rather than to the number of hours worked; and

(3) Your services are performed under a written contract between yourself and the person for whom the services are performed which provides you will not be treated as an employee with respect to these services for Federal tax purposes.

(c) *Who is a direct seller.* You are a direct seller as defined in section 3508 of the Code if—

(1) You are engaged in the trade or business of selling (or soliciting the sale of) consumer products—

(i) To any buyer on a buy-sell basis, a deposit-commission basis, or any similar basis which the Secretary of the Treasury prescribes by regulations, for resale (by the buyer or any other person) in the home or in other than a permanent retail establishment; or

(ii) In the home or in other than a permanent retail establishment; and

(2) Substantially all of your earnings (whether or not paid in cash) for the performance of these services are directly related to sales or other output (including the performance of services) rather than to the number of hours worked; and

(3) Your services are performed under a written contract between yourself and the person for whom the services are performed which provides you will not be treated as an employee with respect to these services for Federal tax purposes.

[48 FR 40515, Sept. 8, 1983]

§ 404.1070 Christian Science practitioners.

If you are a Christian Science practitioner, the services you perform in the exercise of your profession are a trade or business unless you were granted an exemption from coverage under section 1402(e) of the Code, and you did not revoke such exemption in accordance with section 1704(b) of the Tax Reform Act of 1986. An exemption cannot be granted if you filed a valid waiver certificate under the provisions that apply to taxable years ending before 1968.

[55 FR 7311, Mar. 1, 1990]

§ 404.1071 Ministers and members of religious orders.

(a) If you are a duly ordained, commissioned, or licensed minister of a church, or a member of a religious order who has not taken a vow of poverty, the services you perform in the exercise of your ministry or in the exercise of duties required by the order (§ 404.1023(c) and (e)) are a trade or business unless you filed for and were granted an exemption from coverage under section 1402(e) of the Code, and you did not revoke such exemption in accordance with the Social Security Amendments of 1977, section 1704(b) of the Tax Reform Act of 1986, or section 403 of the Ticket to Work and Work Incentives Improvement Act of 1999. An exemption cannot be granted if you filed a valid waiver certificate under the provisions of section 1402(e) that apply to taxable years ending before 1968.

(b) If you are a member of a religious order and have taken a vow of poverty, the services you perform in the exercise of your duties required by the order may be covered as employment. (See § 404.1023 (a) and (e)).

[45 FR 20075, Mar. 27, 1980, as amended at 55 FR 7311, Mar. 1, 1990; 69 FR 51556, Aug. 20, 2004]

§ 404.1073 Public office.

(a) *General.* The performance of the functions of a public office is not a trade or business except under the circumstances explained in paragraph (b) of this section. If you are an officer of a State or political subdivision, you

are considered as employee of the State or political subdivision.

(b) *State and local governmental employees paid by fees*—(1) *Voluntary coverage under section 218 of the Act.* The services of employees of States and political subdivisions, including those in positions paid solely on a fee-basis, may be covered as employment by a Federal-State agreement under section 218 of the Act (see subpart M of this part). States, when entering into these agreements, have the option of excluding under the agreement coverage of services in positions paid solely by fees. If you occupy a position paid solely on a fee-basis and the State has not covered your services under section 218 of the Act, you are considered to be engaged in a trade or business.

(2) *Mandatory old-age, survivors, disability, and hospital insurance coverage.* Beginning with services performed after July 1, 1991, Social Security coverage (old-age, survivors, disability, and hospital insurance) is mandatory, with certain exceptions, for services performed by employees of a State, a political subdivision of a State, or of a wholly owned instrumentality of one or more of the foregoing, if the employees are not members of a retirement system of the State, political subdivision, or instrumentality. Among the exclusions from such mandatory coverage is service performed by an employee in a position compensated solely on a fee-basis which is treated pursuant to section 211(c)(2)(E) of the Act as a trade or business for purposes of inclusion of such fees in the net earnings from self-employment.

(3) If you are a notary public, you are not a public officer even though you perform a public function. Your services as a notary public are not covered for social security purposes.

[45 FR 20075, Mar. 27, 1980, as amended at 57 FR 59910, Dec. 17, 1992]

§404.1074 Farm crew leader who is self-employed.

If you are a farm crew leader and are deemed the employer of the workers as described in §404.1010, we consider you to be engaged in a trade or business. This includes services performed in furnishing workers to perform agricultural labor for others, as well as services performed as a member of the crew.

§404.1075 Members of certain religious groups opposed to insurance.

(a) You may file an application with the Internal Revenue Service for exemption from social security self-employment tax if—

(1) You are a member of a recognized religious sect or division of the sect; and

(2) You adhere to the tenets or teachings of the sect or division of the sect and for this reason are conscientiously opposed to receiving benefits from any private or public insurance that—

(i) Makes payments in the event of death, disability, old age, or retirement; or

(ii) Makes payments toward the cost of, or provides services for, medical care (including the benefits of any insurance system established by the Act).

(b) Your application must be filed under the rules described in 26 CFR 1.1402(h). An application must contain or be accompanied by the applicant's waiver of all benefits and payments under title II and part A of title XVIII of the Act. See §404.305 for the effect of the filing of the waiver and the granting of the exemption.

(c) Regardless of whether you meet all these conditions, your application for exemption will not be approved unless we find that—

(1) The sect or division of the sect has established tenets or teachings which cause you to be conscientiously opposed to the types of insurance benefits described in paragraph (a)(2) of this section;

(2) For a substantial period of time it has been the practice for members of the sect or division of the sect to make provision for their dependent members which is reasonable in view of their general level of living; and

(3) The sect or division of the sect has been in existence continuously since December 31, 1950.

(d) Your application for exemption will be approved by the Internal Revenue Service only if no benefit or other payment under title II or part A of title XVIII of the Act became payable or, but for section 203 or section 222(b)

of the Act, would have become payable, to you or on your behalf at or before the time of the filing of your application for exemption.

(e) The tax exemption ceases to be effective for any taxable year ending after the time you do not meet the requirements of paragraph (a) of this section or after the time we find the religious sect or division of the sect of which you are a member no longer meets the requirements of paragraph (c) of this section. If your tax exemption ceases to be effective, your waiver of the right to receive Social Security and Medicare part A benefits will also no longer be effective. Benefits may be payable based upon your wages for and after the calendar year following the calendar year in which the event occurred upon which the cessation of the exemption is based. Benefits may be payable based upon your self-employment income for and after the taxable year in which the event occurred upon which the cessation of the exemption is based.

[45 FR 20075, Mar. 27, 1980, as amended at 58 FR 64890, Dec. 10, 1993]

§ 404.1077 Individuals under railroad retirement system.

If you are an employee or employee representative as defined in section 3231 (b) and (c) of the Code, your work is not a trade or business. Your services are covered under the railroad retirement system.

SELF-EMPLOYMENT INCOME

§ 404.1080 Net earnings from self-employment.

(a) *Definition of net earnings from self-employment.* If you are self-employed, you must first determine the amount of your net earnings from self-employment before figuring the amount of your earnings that count for social security purposes. Some of your earnings may not be included as net earnings from self-employment even though they are taxable for income tax purposes. If you are an employee but we consider you to be self-employed for social security purposes, you must figure your earnings as though you were actually self-employed unless you work for a church or church-controlled organization that has exempted its employees (see § 404.1068(f)). Subject to the special rules in §§ 404.1081 through 404.1095, the term *net earnings from self-employment* means—

(1) Your gross income, as figured under subtitle A of the Code, from any trade or business you carried on, less deductions attributed to your trade or business that are allowed by that subtitle; plus

(2) Your distributive share of income (or loss) from a trade or business carried on by a partnership of which you are a member, as described in paragraph (b) of this section.

(b) *Income or loss from a partnership.* (1) Your distributive share (whether or not actually distributed) of the income or loss from any trade or business carried on by a partnership of which you are a member, other than as a limited partner, is determined under section 704 of the Code.

(2) If you are a limited partner, your distributive share is included in your net earnings from self-employment if—

(i) The amount is payable to you for services you render to or on behalf of the partnerships; and

(ii) It is a guaranteed payment described in section 707(c) of the Code.

(3) You are a *limited partner* if your financial liability for the obligations of the partnership is limited to the amount of your financial investment in the partnership. Generally, you will not have to perform services in the operation of, or participate in the control of, the business carried on by the partnership for the taxable year involved.

(c) *Reporting methods.* Your gross income from a trade or business includes the gross income you received (under the cash method) or that accrued to you (under the accrual method) from the trade or business in the taxable year. It is immaterial that the income may be attributable in whole or in part to services you rendered or other acts you performed in a prior taxable year.

(d) *What is a taxable year.* (1) The term *taxable year* means—

(i) Your annual accounting period on which you regularly figure your income in keeping your books; or

(ii) A short period resulting from your death before the end of your annual accounting period or from a

change of your annual accounting period.

(2) The term *annual accounting period* means—

(i) A calendar year, consisting of 12 months ending on December 31; or

(ii) A fiscal year, consisting of—

(A) 12 months ending on the last day of any month other than December; or

(B) A period, if elected under section 441 of the Code, that varies from 52 to 53 weeks and always ends on the same day of the week that occurs last in a calendar month or nearest to the last day of the calendar month.

(3) Your taxable year for figuring self-employment income is the same as your taxable year for the purposes of subtitle A of the Code. Your taxable year is a calendar year if—

(i) You keep no books;

(ii) You have no annual accounting period; or

(iii) You have an annual accounting period that differs from the definition of fiscal year as described in paragraph (d)(2)(ii) of this section.

[45 FR 20075, Mar. 27, 1980, as amended at 50 FR 36574, Sept. 9, 1985]

§ 404.1081 General rules for figuring net earnings from self-employment.

(a) *Determining net earnings.* (1) In determining your gross income and the deductions attributable to your trade or business for the purpose of determining your net earnings from self-employment, the provisions that apply to the taxes imposed by sections 1 and 3 of the Code are used.

(2) If you use the accrual method of accounting to figure your taxable income from a trade or business, you must use the same method in determining your net earnings from self-employment.

(3) If you are engaged in a trade or business of selling property on the installment plan and elect, under the provisions of section 453 of the Code, to use the installment method of accounting in figuring your income, you must use the installment method in determining your net earnings from self-employment.

(4) Any income which can be excluded from gross income under any provision of subtitle A of the Code cannot be counted in determining your net earnings from self-employment, unless—

(i) You are a resident of Puerto Rico (see § 404.1089);

(ii) You are a minister or member of a religious order (see § 404.1091);

(iii) You are a United States citizen or resident engaged in a trade or business outside the United States (see § 404.1092); or

(iv) You are a citizen of, or have income from sources within, certain possessions of the United States (see § 404.1093).

(b) *Trade or business carried on.* You must carry on the trade or business either personally or through agents or employees. Income from a trade or business carried on by an estate or trust is not included in determining the net earnings from self-employment of the individual beneficiaries of the estate or trust.

(c) *Aggregate net earnings.* If you are engaged in more than one trade or business, your net earnings from self-employment consist of the total of the net income and losses of all the trades or businesses you carry on. A loss in one trade or business you carry on offsets the income from another trade or business.

(d) *Partnerships.* When you have net earnings from self-employment from a partnership as described in § 404.1080 (a) and (b), those net earnings are combined with your other net earnings from self-employment in determining your total net earnings from self-employment for the taxable year.

(e) *Different taxable years.* If you are a partner and your taxable year is different from that of the partnership, you must include, in figuring your net earnings from self-employment, your distributive share of the income or loss of the partnership for its taxable year ending with or within your taxable year. For the special rule in case of the termination of a partner's taxable year as a result of death, see § 404.1087.

(f) *Meaning of partnerships.* A partnership for social security purposes is one that is recognized as a partnership for income tax purposes. For income tax purposes, the term *partnership* includes not only a partnership as known under common law, but also a syndicate,

group, pool, joint venture, or other unincorporated organization that carries on any trade or business, financial operation, or venture, and which is not a trust, estate, or a corporation.

(g) *Proprietorship taxed as domestic corporation.* If you are a proprietor of an unincorporated business enterprise and have elected to be taxed as a domestic corporation, you must figure your net earnings from self-employment without regard to the election you have made.

[45 FR 20075, Mar. 27, 1980, as amended at 50 FR 36574, Sept. 9, 1985]

§ 404.1082 Rentals from real estate; material participation.

(a) *In general.* Your rentals from real estate and from personal property leased with the real estate (including rentals paid in crop shares) and the deductions attributable to the rentals are excluded in figuring your net earnings from self-employment, unless you receive the rentals in the course of a trade or business as a real estate dealer. If you are an owner or lessee of land, rentals paid in crop shares include income you get under an agreement with another person if the arrangement provides for the following:

(1) The other person will produce agricultural or horticultural commodities on the land.

(2) The commodities produced, or the income from their sale, will be divided between you and the other person.

(3) The amount of your share depends on the amount of the commodities produced.

(b) *Real estate dealers.* (1) You are a real estate dealer if you are engaged in the business of selling real estate to customers for profit.

(2) If you merely hold real estate for investment or speculation and receive rental income from it, you are not considered a real estate dealer.

(3) If you are a real estate dealer, but also hold real estate for investment or speculation in addition to real estate you hold for sale to customers, only the rental income from the real estate held for sale to customers and the deductions attributable to it are included in determining your net earnings from self-employment. The rental income from real estate you hold for investment or speculation and the deductions attributable to it are not counted in figuring your net earnings from self-employment.

(c) *Special rule for farm rental income*—(1) *In general.* If you own or lease land, any income you derive from it is included in figuring your net earnings from self-employment if—

(i) The income results from an arrangement between you and another person which provides for the other person to produce agricultural or horticultural commodities on the land that you own or lease and for you to materially participate in the production or the management of the production of the agricultural or horticultural commodities; and

(ii) You actually do materially participate.

(2) *Nature of arrangement.* (i) The arrangement between you and the other person may be either oral or written. It must provide that the other person will produce one or more agricultural or horticultural commodities and that you will materially participate in the production or the management of the production of the commodities.

(ii) The term *production,* refers to the physical work performed and the expenses incurred in producing a commodity. It includes activities like the actual work of planting, cultivating, and harvesting crops, and the furnishing of machinery, implements, seed, and livestock.

(iii) The term *management of the production,* refers to services performed in making managerial decisions about the production of the crop, such as when to plant, cultivate, dust, spray, or harvest, and includes advising and consulting, making inspections, and making decisions on matters, such as rotation of crops, the type of crops to be grown, the type of livestock to be raised, and the type of machinery and implements to be furnished.

(3) *Material participation.* (i) If you show that you periodically advise or consult with the other person, who under the rental arrangement produces

the agricultural or horticultural commodities, and also show that you periodically inspect the production activities on the land, you will have presented strong evidence that you are materially participating.

(ii) If you also show that you furnish a large portion of the machinery, tools, and livestock used in the production of the commodities, or that you furnish or advance monies, or assume financial responsibility, for a substantial part of the expense involved in the production of the commodities, you will have established that you are materially participating.

(4) *Employees or agents.* We consider any farm rental arrangement entered into by your employee or agent and another person to be an arrangement entered into by you. However, we do not consider the services of an employee or agent as your services in determining the extent to which you have participated in the production or management of production of a commodity.

(5) *Examples.*

Example 1. After the death of her husband, Ms. A rents her farm, together with its machinery and equipment, to B for one-half of the proceeds from the commodities produced on the farm by B. It is agreed that B will live in the tenant house on the farm and be responsible for the overall operation of the farm, such as planting, cultivating, and harvesting the field crops, caring for the orchard and harvesting the fruit and caring for the livestock and poultry. It also is agreed that Ms. A will continue to live in the farm residence and help B operate the farm. Under the agreement it is expected that Ms. A will regularly operate and clean the cream separator and feed the poultry flock and collect the eggs. When possible she will assist B in such work as spraying the fruit trees, penning livestock, culling the poultry, and controlling weeds. She will also assist in preparing the meals when B engages seasonal workers. The agreement between Ms. A and B clearly provides that she will materially participate in the overall production operations to be conducted on her farm by B. In actual practice, Ms. A regularly performs those services. The regularly performed services are material to the production of an agricultural commodity, and the services performed are material to the production operations to which they relate. The furnishing of a substantial portion of the farm machinery and equipment also supports the conclusion that Ms. A has materially participated. Accordingly, the rental income Ms. A receives from her farm should be included in her net earnings from self-employment.

Example 2. G owns a fully-equipped farm which he rents to H under an arrangement which provides that G will materially participate in the management of the production of crops raised on the farm under the arrangement. G lives in town about 5 miles from the farm. About twice a month he visits the farm and looks over the buildings and equipment. G may occasionally, in an emergency, discuss with H some phase of a crop production activity. In effect, H has complete charge of the management of farming operations regardless of the understanding between him and G. Although G pays one-half of the cost of the seed and fertilizer and is charged for the cost of materials purchased by H to make all necessary repairs, G's activities are not material in the crop production activities. Accordingly, G's income from the crops is not included in net earnings from self-employment.

(d) *Rental income from living quarters*—(1) *No services provided for occupants.* Payments you receive for renting living quarters in a private residence, duplex, or multiple-housing unit are generally rental income from real estate. Except in the case of real estate dealers, these payments are excluded in determining net earnings from self-employment, even if the payments are in part attributable to personal property furnished under the lease.

(2) *Services provided for occupants.* (i) Payments you receive for renting living quarters where services are also provided to the occupant, as in hotels, boarding houses, or apartment houses furnishing hotel services, or in tourist camps or tourist homes, are included in determining your net earnings from self-employment. Any payments you receive for the use of space in parking lots, warehouses, or storage garages are also included in determining your net earnings from self-employment.

(ii) Generally, we consider services to be provided to the occupant if they are primarily for the occupant's convenience and are other than those usually provided in connection with the rental of rooms or other space for occupancy only. We consider the supplying of maid service to be a service provided to the occupant. However, we do not consider the furnishing of heat and light, the cleaning of public entrances, exits,

stairways, and lobbies and the collection of trash, as services provided to the occupant.

Example: A owns a building containing four apartments. During the taxable year, A received $1,400 from apartments numbered 1 and 2, which are rented without services provided to the occupants, and $3,600 from apartments numbered 3 and 4, which are rented with services provided. A's fixed expenses for the four apartments are $1,200 during the taxable year. In addition, A has $500 of expenses attributable to the services provided to the occupants of apartments 3 and 4. In determining his net earnings from self-employment, A includes the $3,600 received from apartments 3 and 4, and the expenses of $1,100 ($500 plus one-half of $1,200) attributable to them. The rentals and expenses attributable to apartments 1 and 2 are excluded. Therefore, A has $2,500 of net earnings from self-employment from the building for the taxable year.

(e) *Treatment of business income which includes rentals from real estate.* If an individual or a partnership is engaged in a trade or business other than real estate, and part of the income is rentals from real estate, only that part of the income which is not rentals and the expenses attributable to that portion are included in determining net earnings from self-employment.

§ 404.1083 Dividends and interest.

(a) The dividends you receive on shares of stock are excluded in determining your net earnings from self-employment, unless you are a dealer in stocks and securities and receive the dividends in the course of your trade or business.

(b) The interest you receive on a bond, debenture, note, certificate, or other evidence of indebtedness issued with interest coupons or in registered form by any corporation (including one issued by a government or political subdivision) is excluded in determining your net earnings from self-employment, unless you are a dealer in stocks and securities and receive the interest in the course of your trade or business.

(c) If you hold stocks or securities for investment or speculation purposes, any dividends and interest you receive that are excludable under paragraphs (a) and (b) of this section are excluded in determining your net earnings from self-employment, whether or not you are a dealer in stocks and securities.

(d) A dealer in stocks or securities is a merchant with an established place of business who is regularly engaged in the business of purchasing stocks or securities and reselling them to customers. The dealer, as a merchant, buys stocks or securities and sells them to customers with a view to making a profit. Persons who buy and sell or hold stocks or securities for investment or speculation, regardless of whether the buying or selling constitutes a trade or business, are not dealers in stocks or securities.

[45 FR 20075, Mar. 25, 1980; 45 FR 25060, Apr. 14, 1980]

§ 404.1084 Gain or loss from disposition of property; capital assets; timber, coal, and iron ore; involuntary conversion.

(a) If you are engaged in a trade or business, you must, in determining your net earnings from self-employment, exclude any gain or loss—

(1) That is considered a gain or loss from the sale or exchange of a capital asset;

(2) From the cutting of timber or from the disposal of timber or coal, even if held primarily for sale to customers, if section 631 of the Code applies to the gain or loss;

(3) From the disposal of iron ore mined in the United States, even if held primarily for sale to customers, if section 631 of the Code applies to the gain or loss; and

(4) From the sale, exchange, involuntary conversion, or other disposition of property that is not—

(i) Stock in trade or other property of a kind which would properly be included in inventory if on hand at the close of the taxable year; or

(ii) Property held primarily for sale to customers in the ordinary course of a trade or business;

(b) For purposes of paragraph (a)(4) of this section, it is immaterial whether a gain or loss is treated as a capital gain or as an ordinary gain or loss for purposes other than determining earnings from self-employment.

(c) For purposes of paragraph (a)(4) of this section—

(1) The term *involuntary conversion* means a compulsory or unintended change of property into other property or money as a result of such things as destruction, theft or seizure; and

(2) The term *other disposition* includes destruction or loss by fire, theft, storm, shipwreck, or other casualty, even though there is no change of the property into other property or money.

Example: During the taxable year 1976, A, who owns a grocery store, had a net profit of $1,500 from the sale of groceries and a gain of $350 from the sale of a refrigerator case. During the same year, he had a loss of $2,000 as a result of damage by fire to the store building. In figuring taxable income for income tax purposes, all of these items are considered. In determining net earnings from self-employment, however, only the $1,500 of profit derived from the sale of groceries is included. The $350 gain and the $2,000 loss are excluded.

§ 404.1085 Net operating loss deduction.

When determining your net earnings from self-employment, you disregard the deduction provided by section 172 of the Code that relates to net operating losses sustained in years other than the taxable year.

§ 404.1086 Community income.

If community property laws apply to income that an individual derives from a trade or business (other than a trade or business carried on by a partnership), the gross income and deductions attributable to such trade or business shall be treated as the gross income and deductions of the spouse carrying on such trade or business or, if such trade or business is jointly operated, treated as the gross income and deductions of each spouse on the basis of his or her respective distributive share of the gross income and deductions.

[70 FR 41955, July 21, 2005]

§ 404.1087 Figuring partner's net earnings from self-employment for taxable year which ends as a result of death.

(a) *General.* In the case of a deceased partner whose taxable year ends because of death, the deceased partner's net earnings from self-employment includes the amount of his or her distributive share of partnership ordinary income or loss for the partnership's taxable year that is attributable to an interest in the partnership through the month of death.

(b) *Computation.* (1) The deceased partner's distributive share of partnership ordinary income or loss for the partnership taxable year in which death occurred is determined by applying the rules contained in paragraphs (d) and (f) of § 404.1081.

(2) The portion of the distributive share to be included in the deceased partner's net earnings from self-employment for his or her last taxable year is determined by treating the ordinary income or loss constituting the distributive share as having been realized or sustained ratably over the partnership taxable year during which the deceased partner had an interest in the partnership and during which the deceased partner's estate, or any other person succeeding by reason of the death to rights to his partnership interest, held an interest in the partnership.

(c) *Deceased partner's distributive share.* A deceased partner's distributive share includes the distributive share of the estate or of any other person succeeding to the interest of a deceased partner. It does not include any share attributable to a partnership interest that was not held by the deceased partner at the time of death. If a deceased partner's estate should acquire an interest in a partnership in addition to the interest to which it succeeded upon the death of the deceased partner, the amount of the distributive share attributable to the additional interest acquired by the estate is not included in computing the deceased partner's distributive share of the partnership's ordinary income or loss for the partnership taxable year.

(d) *Options available to farmers.* In determining the applicability of the optional method of figuring net earnings from self-employment to a member of a farm partnership it is necessary to determine the partner's distributive share of partnership gross income or distributive share of income described in section 702(a)(8) of the Code.

§ 404.1088 Retirement payment to retired partners.

(a) *In general.* If you are a retired partner, in figuring your net earnings from self-employment you must exclude payments made to you on a periodic basis by a partnershp on account of your retirement and which are to continue until your death. This exclusion applies only if the payments are made under a written plan which meets the requirements set out in 26 CFR 1.1402(a)–(17) and the conditions in paragraph (b) of this section are met. The necessary requirements and conditions must be met throughout the entire partnership's taxable year for the payments to be excluded so that either all or none of the payments are excluded.

(b) *Other conditions.* You must have been paid your full share of the partnership's capital before the close of the partnership's taxable year in which retirement payments are made. Also, no member of the partnership can have any financial obligations to you (in his or her capacity as a partner) except to make the retirement payments. Lastly, you cannot perform any services for the partnership in the partnership's taxable year which falls wholly or partially in your taxable year in which you receive the retirement payments.

Example: D, a partner in the DEF partnership, retired from the partnership as of December 31, 1976. The taxable year of both D and the partnership is the calendar year. During the partnership's taxable year ending December 31, 1977, D rendered no service to any trade or business carried on by the partnership. On or before December 31, 1977, all obligations (other than retirement payments under the plan) from the other partners to D were liquidated, and D's share of the capital of the partnership was paid to him. Retirement payments received by D under the partnership's plan in his taxable year ending December 31, 1977, are excluded in determining net earnings from self-employment (if any) for that taxable year.

§ 404.1089 Figuring net earnings for residents and nonresidents of Puerto Rico.

(a) *Residents.* If you are a resident of Puerto Rico, whether or not you are an alien, a citizen of the United States, or a citizen of Puerto Rico, you must figure your net earnings from self-employment in the same manner as would a citizen of the United States residing in the United States. In figuring your net earnings from self-employment you must include your income from sources in Puerto Rico even though you are a resident of Puerto Rico during the entire taxable year.

(b) *Nonresidents.* A citizen of Puerto Rico, who is also a citizen of the United States and who is not a resident of Puerto Rico must figure net earnings from self-employment in the same manner as other citizens of the United States.

§ 404.1090 Personal exemption deduction.

The deduction provided by section 151 of the Code, relating to personal exemptions, is excluded in determining net earnings from self-employment.

§ 404.1091 Figuring net earnings for ministers and members of religious orders.

(a) *General.* If you are a duly ordained, commissioned, or licensed minister of a church or a member of a religious order who has not taken a vow of poverty, we consider you to be engaged in a trade or business under the conditions described in § 404.1071 with regard to services described in § 404.1023 (c) and (e). In figuring your net earnings from self-employment from performing these services, you must include certain income (described in paragraphs (b) and (c) of this section) that may be excluded from your gross income for income tax purposes.

(b) *Housing and meals.* You must include in figuring your net earnings from self-employment the rental value of a home furnished to you and any rental allowance paid to you as payment for services performed in the exercise of your ministry or in the exercise of duties required by your order even though the rental value or rental allowance may be excluded from gross income by section 107 of the Code. Also, the value of any meals or lodging furnished to you in connection with the performance of these services is included in figuring your net earnings from self-employment even though their value is excluded from gross income by section 119 of the Code.

(c) *Housing allowance when included in retirement pay*. You must exclude any parsonage or housing allowance included in your retirement pay or any other retirement benefit received after retirement pursuant to a church plan as defined in section 414(e) of the Internal Revenue Code when computing your net earnings from self-employment. For example, if a minister retires from Church A and the rental value of a parsonage or any other allowance is included in his/her retirement pay, the parsonage allowance must be excluded when determining net earnings from self-employment. However, if this same retired minister goes to work for Church B and is paid a parsonage allowance by Church B, this new income must be included when computing net earnings from self-employment.

(d) *Services outside the United States*. If you are a citizen or resident of the United States performing services outside the United States which are in the exercise of your ministry or in the exercise of duties required by your order, your net earnings from self-employment from the performance of these services are figured as described in paragraph (b) of this section. However, they are figured without regard to the exclusions from gross income provided in sections 911 and 931 of the Code relating to earned income from services performed outside the United States and from sources within possessions of the United States.

[45 FR 20075, Mar. 27, 1980, as amended at 50 FR 36574, Sept. 9, 1985; 70 FR 41955, July 21, 2005]

§ 404.1092 Figuring net earnings for U.S. citizens or residents living outside the United States.

(a) *Taxable years beginning after December 31, 1983*. If you are a citizen or resident of the United States and are engaged in a trade or business outside the United States, your net earnings from self-employment are figured without regard to the exclusion from gross income provided by section 911 (a)(1) of the Code.

(b) *Taxable years beginning after December 31, 1981, and before January 1, 1984*. If you are a citizen of the United States and were engaged in a trade or business outside the United States, your net earnings from self-employment are figured without regard to the exclusion from gross income provided by section 911(a)(1) of the Code unless you are a resident of a foreign country or countries for an uninterrupted period which includes an entire taxable year.

[50 FR 36574, Sept. 9, 1985]

§ 404.1093 Possession of the United States.

In using the exclusions from gross income provided under section 931 of the Code (relating to income from sources within possessions of the United States) and section 932 of the Code (relating to citizens of possessions of the United States) for purposes of figuring your net earnings from self-employment, the term *possession of the United States* shall be deemed not to include the Virgin Islands, Guam, the Commonwealth of the Northern Mariana Islands, or American Samoa.

[45 FR 20075, Mar. 27, 1980, as amended at 69 FR 51556, Aug. 20, 2004]

§ 404.1094 Options available for figuring net earnings from self-employment.

(a) *General*. If you have income from a trade or business in certain situations, you have options for figuring your net earnings from self-employment. The options available to you depend on whether you have income from an agricultural trade or business or a non-agricultural trade or business. For a definition of agricultural trade or business see § 404.1095.

(b) *Agricultural trade or business*. The net earnings from self-employment you derive from an agricultural trade or business may, at your option, be figured as follows:

(1) *Gross income of $2,400 or less*. If your gross income is $2,400 or less you may, at your option, report 66⅔ percent of the gross income as net earnings from self-employment instead of your actual net earnings from your business.

(2) *Gross income of more than $2,400*. If your gross income is more than $2,400 and your actual net earnings from your business are less than $1,600 you may, at your option, report $1,600 as net

earnings from self-employment instead of your actual net earnings. If your actual net earnings are $1,600 or more you cannot use the optional method.

(3) *Two or more agricultural trades or businesses.* If you carry on more than one agricultural trade or business as a sole proprietor or as a partner, you must combine your gross income and net income from each trade or business to find out whether you may use the optional method of figuring net earnings.

(c) *Non-agricultural trade or business.* (1) The net earnings from self-employment you derive from a non-agricultural trade or business may be reported under an optional method if you are self-employed on a regular basis (as defined in paragraph (c)(4) of this section). You cannot use the optional method of reporting for more than 5 taxable years, and you cannot report less than your actual net earnings from self-employment.

(2) *Computation.* If your actual net earnings from self-employment are less than $1,600 and less than 66⅔ percent of your gross income, you may, at your option, report 66⅔ percent of your gross income (but not more than $1,600) as your net earnings from self-employment.

Example: A operates a grocery store and files income tax returns on a calendar year basis. A meets the *self-employed on a regular basis* requirement because actual net earnings from self-employment were $400 or more in 1976 and in 1977. Gross income and net profit from operating the grocery store in 1978 through 1980 are as follows:

	1978	1979	1980
Gross income	$2,800	$1,200	$1,000
Net profit	300	400	800

For the year 1978, A may report as annual net earnings from self-employment either—

(i) None. (Actual net earnings from self-employment are less than $400); or

(ii) $1,600. (Non-agricultural option, 66⅔ percent of $2,800, but not to exceed the $1,600 maximum.)

For the year 1979, A may report as annual net earnings from self-employment either—

(i) $400. (Actual net earnings from self-employment); or

(ii) $800. (Non-agricultural option, 66⅔ percent of $1,200.)

For the year 1980, A must report $800, the actual net earnings from self-employment. The non-agricultural option is not available because A's actual net earnings are not less than 66⅔ percent of the gross income.

(3) *Figuring net earnings from both non-agricultural and agricultural self-employment.* If you are self-employed on a regular basis, you may use the non-agricultural optional method of reporting when you have both non-agricultural and agricultural trades or businesses. However, in order to use this method, your actual net earnings from non-agricultural self-employment combined with your actual net earnings from agricultural self-employment, or your optional net earnings from agricultural self-employment, must be less than $1,600, and the net non-agricultural earnings must be less than 66⅔ percent of your gross non-agricultural income. If you qualify for using both the non-agricultural and agricultural option, you may report less than your actual total net earnings, but not less than your actual net earnings from non-agricultural self-employment alone. If you elect to use both options in a given taxable year, the combined maximum reportable net earnings from self-employment may not exceed $1,600.

Example: C was regularly self-employed. She derived actual net earnings from self-employment of $400 or more in 1975 and in 1976. Her gross income and net profit from operating both a grocery store and a farm in 1978 are:

GROCERY STORE	
Gross income	$1,000
Net profit	800
FARM	
Gross income	$2,600
Net profit	400

For the year 1978, C may report $1,200 (actual net earnings from self-employment from both businesses), or $2,400 ($1,600 agricultural option (66⅔ percent of $2,600 farm gross income not to exceed $1,600) and $800 grocery store profit). C cannot use the non-agricultural option for 1978 because her actual grocery store net exceeds 66⅔ percent of her grocery store gross income.

(4) *Self-employed on a regular basis.* For any taxable year beginning after 1972, we consider you to be self-employed on a regular basis, or to be a member of a partnership on a regular basis, if, in at least 2 of the 3 taxable years immediately before that taxable year, you had actual net earnings from self-employment of not less than $400 from agricultural and non-agricultural

trades or businesses (including your distributive share of the net income or loss from any partnership of which you are a member).

(d) *Members of partnerships*. If you are a member of a partnership you may use the optional method of reporting. Your gross income is your distributive share of the partnership's gross income (after all guaranteed payments to which section 707(c) of the Code applies have been deducted), plus your own guaranteed payment.

(e) *Computing gross income*. For purposes of this section gross income means—

(1) Under the cash method of computing, the gross receipts from the trade or business reduced by the cost or other basis of property that was purchased and sold, minus any income that is excluded in computing net earnings from self-employment; or

(2) Under the accrual method of computing, the gross income minus any income that is excluded in figuring net earnings from self-employment.

(f) *Exercise of option*. For each taxable year for which you are eligible to use the optional method and elect to use that method, you must figure your net earnings from self-employment in that manner on your tax return for that year. If you wish to change your method of reporting after your tax return is filed, you may change it by filing an amended tax return with the Internal Revenue Service or by filing with us Form 2190, Change in Method of Computing Net Earnings from Self-Employment.

§ 404.1095 Agricultural trade or business.

(a) An agricultural trade or business is one in which, if the trade or business were carried on entirely by employees, the major portion of the services would be agricultural labor (§ 404.1057).

(b)(1) If the services are partly agricultural and partly non-agricultural, the time devoted to the performance of each type of service is the test used to determine whether the major portion of the services is agricultural labor.

(2) If more than half of the time spent in performing all the services is spent in performing services that are agricultural labor, the trade or business is agricultural.

(3) If half or less of the time spent in performing all the services is spent in performing services that are agricultural labor, the trade or business is not agricultural. The time spent in performing the services is figured by adding the time spent in the trade or business during the taxable year by every individual (including the individual carrying on the trade or business and the members of that individual's family).

(c) We do not apply the rules in this section if the non-agricultural services are performed in connection with a trade or business separate and distinct from the agricultural trade or business. A roadside automobile service station on a farm is a trade or business separate and distinct from the agricultural trade or business, and the gross income from the service station, less the deductions attributable to it, is to be considered in determining net earnings from self-employment.

(d) We consider a sharefarmer (see § 404.1068(c)) or a materially participating owner or tenant (see § 404.1082(c)) to be engaged in an agricultural trade or business. We use the rules in this section to determine whether a farm crew leader who is self-employed (see § 404.1074) is engaged in an agricultural trade or business.

§ 404.1096 Self-employment income.

(a) *General*. Self-employment income is the amount of your net earnings from self-employment that is subject to social security tax and counted for social security benefit purposes. The term *self-employment income* means the net earnings from self-employment you derive in a taxable year, except as described in paragraphs (b), (c) and (d) of this section.

(b) *Maximum self-employment income*. (1) The term *self-employment income* does not include that part of your net earnings from self-employment that exceeds (or that part of your net earnings from self-employment which, when added to the wages you received in that taxable year, exceeds)—

Taxable year	Amount
Ending before 1955	$3,600

Taxable year	Amount
Ending in 1955 through 1958	4,200
Ending in 1959 through 1965	4,800
Ending in 1966 and 1967	6,600
Ending after 1967 and beginning before 1972	7,800
Beginning in 1972	9,000
Beginning in 1973	10,800
Beginning in 1974	13,200
Beginning in 1975	14,100
Beginning in 1976	15,300
Beginning in 1977	16,500
Beginning in 1978	17,700
Beginning in 1979	22,900
Beginning in 1980	25,900
Beginning in 1981	29,700
Beginning in 1982	32,400
Beginning in 1983	35,700
Beginning in 1984	37,800
Beginning in 1985	39,600
Beginning in 1986	42,000
Beginning in 1987	43,800
Beginning in 1988	45,000
Beginning in 1989	48,000
Beginning in 1990	51,300
Beginning in 1991	53,400
Beginning in 1992	55,500

(2) For the purpose of this paragraph the term *wages* includes remuneration paid to an employee for services covered by an agreement entered into under section 218 of the Act, or an agreement entered into under section 3121(l) of the Code, which would be wages under section 209 of Act if the services were considered employment under section 210(a) of the Act.

(c) *Minimum net earnings from self employment.* (1) Self-employment income does not include your net earnings from self-employment when the amount of those earnings for the taxable year is less than $400. If you have only $300 of net earnings from self-employment for the taxable year you would not have any self-employment income. (Special rules apply if you are paid $100 or more and work for a church or church-controlled organization that has exempted its employees (see § 404.1068(f)).)

(2) If you have net earnings from self-employment of $400 or more for the taxable year you may have less than $400 of creditable self-employment income. This occurs where your net earnings from self-employment is $400 or more for a taxable year and the amount of your net earnings from self-employment plus the amount of the wages paid to you during that taxable year exceed the maximum creditable earnings for a year. For example, if you had net earnings from self-employment of $1,000 for 1978, and were also paid wages of $17,500 during 1978, your creditable self-employment income for 1978 would be $200.

(d) *Nonresident aliens.* A nonresident alien has self-employment income only if coverage is provided under a totalization agreement [see § 404.1913]. We do not consider an individual who is a resident of the Commonwealth of Puerto Rico, the Virgin Islands, Guam, the Commonwealth of the Northern Mariana Islands, or American Samoa to be a nonresident alien.

[45 FR 20075, Mar. 27, 1980, as amended at 50 FR 36575, Sept. 9, 1985; 52 FR 8250, Mar. 17, 1987; 57 FR 44098, Sept. 24, 1992; 69 FR 51556, Aug. 20, 2004]

Subpart L [Reserved]

Subpart M—Coverage of Employees of State and Local Governments

AUTHORITY: Secs. 205, 210, 218, and 702(a)(5) of the Social Security Act (42 U.S.C. 405, 410, 418, and 902(a)(5)); sec. 12110, Pub. L. 99–272, 100 Stat. 287 (42 U.S.C. 418 note); sec. 9002, Pub. L. 99–509, 100 Stat. 1970.

SOURCE: 53 FR 32976, Aug. 29, 1988, unless otherwise noted.

GENERAL

§ 404.1200 General.

(a) *Coverage under section 218 of the Act.* Under section 218 of the Social Security Act (the Act) a State may ask the Commissioner of Social Security to enter into an agreement to extend Federal old-age, survivors, disability and hospital insurance coverage to groups of employees of the State and its political subdivisions. The Commissioner shall enter into such an agreement. State and local government employees, after being covered under an agreement, have the same benefit rights and responsibilities as other employees who are mandatorily covered under the programs. For payments due on wages paid before 1987, the State assumes full financial and reporting responsibility for all groups covered under its agreement. The agreement may not be terminated in its entirety or with respect to any coverage group under that agreement. For payments due on wages

paid in the year 1987 and years later, section 9002 of Pub. L. 99–509 amends section 218 of the Act by transferring responsibility for collecting contributions due and receiving wage reports from the Social Security Administration (SSA) to the Internal Revenue Service (IRS). Sections of the regulations wholly or partly affected by this amendment to the Act are appended with the phrase ''—for wages paid prior to 1987.''

(b) *Mandatory old-age, survivors, disability, and hospital insurance coverage.* Under section 210(a)(7)(F) of the Act, mandatory old-age, survivors, disability, and hospital insurance coverage is extended to certain services performed after July 1, 1991, by individuals who are employees of a State (other than the District of Columbia, Guam, the Commonwealth of the Northern Mariana Islands, or American Samoa), a political subdivision of the State, or any wholly owned instrumentality of one or more of the foregoing, and who are not members of the employer's retirement system. Certain services are excluded from such mandatory coverage (see § 404.1020(a)(3).

[53 FR 32976, Aug. 29, 1988, as amended at 57 FR 59911, Dec. 17, 1992; 62 FR 38450, July 18, 1997; 69 FR 51556, Aug. 20, 2004]

§ 404.1201 Scope of this subpart regarding coverage and wage reports and adjustments.

This subpart contains the rules of SSA about:

(a) Coverage under section 218 of the Act—

(1) How a State enters into and modifies an agreement; and

(2) What groups of employees a State can cover by agreement.

(b) Contributions, wage reports, and adjustments—for wages paid prior to 1987—

(1) How a State must identify covered employees and what records it must keep on those employees;

(2) Periodic reviews of the source records kept on covered employees;

(3) How and when a State must report wages and pay contributions;

(4) What the State's liability for contributions is and how SSA figures the amount of those contributions;

(5) What happens if a State fails to pay its contributions timely;

(6) How errors in reports and contribution payments are corrected;

(7) How overpayments of contributions are credited or refunded;

(8) How assessments are made if contributions are underpaid; and

(9) How a State can obtain administrative or judicial review of a decision on a credit, refund, or assessment.

[53 FR 32976, Aug. 29, 1988, as amended at 57 FR 59911, Dec. 17, 1992; 65 FR 16813, Mar. 30, 2000]

§ 404.1202 Definitions.

(a) Terms which have special meaning in this subpart are described in this section. Where necessary, further explanation is included in the section where the term is used.

(b) *Coverage terms:*

Agreement—The agreement between the Commissioner of Social Security and the State containing the conditions under which retirement, survivors, disability and hospital insurance coverage is provided for State and local government employees.

Coverage—The extension of Social Security protection (retirement, survivors, disability, and hospital insurance) by agreement between the Commissioner of Social Security and a State to employees of the State and its political subdivisions or by agreement between the Commissioner of Social Security and an interstate instrumentality to employees of the interstate instrumentality.

Coverage group—The grouping by which employees are covered under an agreement.

Employee—An employee as defined in section 210(j) of the Act. Usually, the common-law control test is used in determining whether an employer-employee relationship exists. The term also includes an officer of a State or political subdivision.

Governmental function—The traditional functions of government: legislative, executive, and judicial.

Interstate instrumentality—An independent legal entity organized by two or more States to carry out one or more functions. For Social Security coverage purposes under section 218 of the Act, an interstate instrumentality

is treated, to the extent practicable, as a ''State.''

Modification—A change to the agreement between the Commissioner of Social Security and a State which provides coverage of the services of employees not previously covered or which alters the agreement in some other respect.

Political subdivision—A separate legal entity of a State which usually has specific governmental functions. The term ordinarily includes a county, city, town, village, or school district, and in many States, a sanitation, utility, reclamation, drainage, flood control, or similar district. A political subdivision includes an instrumentality of a State, one or more politicial subdivisions of a State, or a State and one or more of its political subdivisions.

Proprietary function—A business engaged in by a State or political subdivision such as a public amusement park or public parking lot.

Retirement system—A pension, annuity, retirement, or similar fund or system established by a State or political subdivision.

SSA—The Social Security Administration.

State—Includes the fifty States, Puerto Rico, and the Virgin Islands. It does not include the District of Columbia, Guam, the Commonwealth of the Northern Mariana Islands, or American Samoa. ''State'' also refers to an interstate instrumentality where applicable.

We—The Social Security Administration.

(c) *Contributions, wage reporting, and adjustment terms—for wages paid prior to 1987:*

Allowance of a credit or refund—The written notice to a State of the determination by SSA of the amount owed to the State by SSA, the period involved, and the basis for the determination.

Assessment—The written notice to a State of the determination by SSA of the amount (contributions or accrued interest) owed to SSA by the State, the period involved, and the basis for the determination.

Contributions—Payments made under an agreement which the State deposits in a Federal Reserve bank. The amounts are based on the wages paid to employees whose services are covered under an agreement. These amounts are equal to the taxes imposed under the Internal Revenue Code on employers and employees in private employment.

Contribution return—Form used to identify and account for all contributions actions.

Disallowance of a State's claim for credit or refund—The written notice to a State of the determination by SSA that the State's claim for credit or refund is denied, the period involved, and the basis for the determination.

Overpayment—A payment of more than the correct amount of contributions or interest.

Underpayment—A payment of less than the correct amount of contributions or interest.

Wage reports—Forms used to identify employees who were paid wages for covered employment and the amounts of those wages paid. This includes corrective reports.

[53 FR 32976, Aug. 29, 1988, as amended at 62 FR 38450, July 18, 1997; 69 FR 51556, Aug. 20, 2004]

§ 404.1203 Evidence—for wages paid prior to 1987.

(a) *State's responsibility for submitting evidence.* The State, under the provisions of the agreement, is responsible for accurately reporting the wages paid employees for services covered by the agreement and for paying the correct amount of contributions due on those wages. This responsibility includes submitting evidence to verify the accuracy of the reports and payments.

(b) *Failure to submit requested evidence.* The State is required to submit information timely to SSA. If we request additional evidence to verify the accuracy of reports and payments, we specify when that evidence must be submitted. If we do not receive the evidence timely, and the State provides no satisfactory explanation for its failure to submit the evidence timely, we may proceed, if appropriate, on the basis of the information we have. Proceeding on the basis of the information we have permits us to credit the wage records of employees properly, where

possible, while continuing to work with the State to resolve remaining discrepancies.

(Approved by the Office of Management and Budget under control number 0960–0425)

[53 FR 32976, Aug. 29, 1988, as amended at 66 FR 28836, May 25, 2001]

§ 404.1204 Designating officials to act on behalf of the State.

(a) Each State which enters into an agreement shall designate the official or officials authorized to act on the State's behalf in administering the agreement. Each State shall inform SSA of the name, title, and address of the designated official(s) and the extent of each official's authority. For example, a State may indicate that the State official is authorized:

(1) To enter into an agreement and execute modifications to the agreement; and

(2) To carry out the ministerial duties necessary to administer the agreement.

For wages paid prior to 1987:

(3) To enter into agreements to extend or re-extend the time limit for assessment or credit;

(4) To make arrangements in connection with onsite reviews; and

(5) To request administrative review of an assessment, an allowance of a credit or refund, or a disallowance of a credit or refund.

(b) Each State shall inform SSA timely of changes in designated officials or changes in their authority.

(Approved by the Office of Management and Budget under control number 0960–0425)

[53 FR 32976, Aug. 29, 1988, as amended at 66 FR 28836, May 25, 2001]

WHAT GROUPS OF EMPLOYEES MAY BE COVERED

§ 404.1205 Absolute coverage groups.

(a) *General.* An absolute coverage group is a permanent grouping of employees, e.g., all the employees of a city or town. It is a coverage group for coverage and reporting purposes. When used for coverage purposes, the term refers to groups of employees whose positions are not under a retirement system. An absolute coverage group may include positions which were formerly under a retirement system and, at the State's option, employees who are in positions under a retirement system but who are ineligible (see § 404.1208) to become members of that system.

(b) *What an absolute coverage group consists of.* An absolute coverage group consists of one of the following employee groups:

(1) State employees performing services in connection with the State's governmental functions;

(2) State employees performing services in connection with a single proprietary function of the State;

(3) Employees of a State's political subdivision performing services in connection with that subdivision's governmental functions;

(4) Employees of a State's political subdivision performing services in connection with a single proprietary function of the subdivision;

(5) Civilian employees of a State's National Guard units; and

(6) Individuals employed under an agreement between a State and the U.S. Department of Agriculture as agricultural products inspectors.

(c) *Designated coverage groups.* A State may provide coverage for designated (*i.e.*, selected) absolute coverage groups of the State or a political subdivision. When coverage is extended to these designated groups, the State must specifically identify each group as a designated absolute coverage group and furnish the effective date of coverage and any optional exclusion(s) for each group. Where a State has provided coverage to designated absolute coverage groups, the State may, by modifying its agreement, extend that coverage to any absolute coverage group in the State.

§ 404.1206 Retirement system coverage groups.

(a) *General.* Section 218(d) of the Act authorizes coverage of services of employees in positions under a retirement system. For purposes of obtaining coverage, a system may be considered a separate retirement system authorized by sections 218(d)(6) (A) or (B) or 218(l) of the Act. Under these sections of the Act a State may designate the positions of any one of the following

groupings of employees as a separate retirement system:

(1) The entire system;

(2) The employees of the State under the system;

(3) The employees of each political subdivision in the State under the system;

(4) The employees of the State and the employees of any one or more of the State's political subdivisions;

(5) The employees of any combination of the State's political subdivisions;

(6) The employees of each institution of higher learning, including junior colleges and teachers colleges;

(7) The employees of a hospital which is an integral part of a political subdivision; or

(8) The employees in police officers' positions or firefighters' positions, or both.

If State law requires a State or political subdivision to have a retirement system, it is considered established even though no action has been taken to establish the system.

(b) *Retirement system coverage groups.* A retirement system coverage group is a grouping of employees in positions under a retirement system. Employees in positions under the system have voted for coverage for the system by referendum and a State has provided coverage by agreement or modification of its agreement. It is not a permanent grouping. It exists only for referendum and coverage purposes and is not a separate group for reporting purposes. Once coverage has been obtained, the retirememt system coverage group becomes part of one of the absolute coverage groups described in § 404.1205(b).

(c) *What a retirement system coverage group consists of.* A retirement system coverage group consists of:

(1) Current employees—all employees whose services are not already covered by the agreement, who are in positions covered by the same retirement system on the date an agreement or modification of the agreement is made applicable to the system;

(2) Future employees—all employees in positions brought under the system after an agreement or modification of the agreement is signed; and

(3) Other employees—all employees in positions which had been under the retirement system but which were not under the retirement system when the group was covered (including ineligibles who had been optionally excluded from coverage under section 218(c)(3)(B) of the Act).

(d) *Referendum procedures.* Prior to signing the agreement or modification, the governor or an official of the State named by the governor (for an interstate instrumentality, its chief executive officer) must certify to the Commissioner that:

(1) All eligible employees were given at least 90 days' notice of the referendum;

(2) All eligible employees were given an opportunity to vote in the referendum;

(3) Only eligible employees were permitted to vote in the referendum;

(4) Voting was by secret written ballot on the question of whether service in positions covered by the retirement system should be included under an agreement;

(5) The referendum was conducted under the supervision of the governor or agency or individual named by him; and

(6) A majority of the retirement system's eligible employees voted for coverage under an agreement.

The State has two years from the date of a favorable referendum to enter into an agreement or modification extending coverage to the retirement system coverage group. If the referendum is unfavorable, another referendum cannot be held until at least one year after that unfavorable referendum.

(e) *Who is covered.* If a majority of the eligible employees in a retirement system vote for coverage, all employees in positions in that retirement system become covered.

(f) *Coverage of employees in positions under more than one retirement system.* (1) If an employee occupies two or more positions each of which is under a different retirement system, the employee's coverage in each position depends upon the coverage extended to each position under each system.

(2) If an employee is in a single position which is under more than one retirement system (because the employee's occupancy of that position permits her or him to become a member of more than one retirement system), the employee is covered when the retirement system coverage group including her or his position is covered under an agreement unless (A) he or she is not a member of the retirement system being covered and (B) he or she is a member of a retirement system which has not been covered. This rule also applies to the coverage of services in police officers' and firefighters' positions in States and interstate instrumentalities as discussed in § 404.1212(c).

[53 FR 32976, Aug. 29, 1988, as amended at 61 FR 38367, July 24, 1996; 62 FR 38451, July 18, 1997]

§ 404.1207 Divided retirement system coverage groups.

(a) *General.* Under section 218(d)(6)(C) of the Act certain States and under section 218(g)(2) of the Act all interstate instrumentalities may divide a retirement system based on whether the employees in positions under that system want coverage. The States having this authority are Alaska, California, Connecticut, Florida, Georgia, Hawaii, Illinois, Kentucky, Louisiana, Massachusetts, Minnesota, Nevada, New Jersey, New Mexico, New York, North Dakota, Pennsylvania, Rhode Island, Tennessee, Texas, Vermont, Washington, and Wisconsin.

(b) *Divided retirement system coverage group.* A divided retirement system coverage group is a grouping under a retirement system of positions of members of the system who voted for coverage and positions of individuals who become members of the system (the ''yes'' group), and positions of members of the system who did not elect coverage (the ''no'' group) and ineligible employees (see § 404.1208). For purposes of this section for groups covered after 1959, the term ''member'' also includes individuals who have an option to become members of the retirement system but have not done so. The position of a member in the ''no'' group can be covered if, within two years after the agreement or modification extending coverage to the ''yes'' group is executed, the State provides an opportunity to transfer the position to the covered ''yes'' group and the individual occupying the position makes a written request for the transfer. The members of the ''no'' group can also be covered if, by referendum, a majority of them vote for coverage. If the majority votes for coverage, all positions of the members of the ''no'' group become covered. There is no further subdivision of the ''no'' group into those who voted for and those who voted against coverage. If the State requests, the ineligibles in the ''no'' group may become part of the ''yes'' group and have their services covered.

(c) *Referendum procedures.* To divide a retirement system, the State must conduct a referendum among the system's employees. If the system is to be divided, the governor or an individual named by him must certify to the Secretary that:

(1) The referendum was held by written ballot on the question of whether members of a retirement system wish coverage under an agreement;

(2) All members of the retirement system at the time the vote was held had the opportunity to vote;

(3) All members of the system on the date the notice of the referendum was issued were given at least 90 days' notice regarding the referendum;

(4) The referendum was conducted under the supervision of the governor or agency or person designated by him; and

(5) The retirement system was divided into two parts, one composed of positions of members of the system who voted for coverage and the other composed of the remaining positions under the retirement system.

After the referendum the State may include those members who chose coverage under its agreement as a retirement system coverage group. The State has two years from the date of the referendum to enter into an agreement or modification extending coverage to that group.

[53 FR 32976, Aug. 29, 1988, as amended at 70 FR 41956, July 21, 2005]

§ 404.1208 Ineligible employees.

(a) *Definition*. An ineligible is an employee who, on first occupying a position under a retirement system, is not eligible for membership in that system because of a personal disqualification like age, physical condition, or length of service.

(b) *Coverage of ineligible employees*. A State may, in its agreement or any modification to the agreement, provide coverage for the services of ineligible employees in one of three ways:

(1) As part of or as an addition to an absolute coverage group;

(2) As part of a retirement system coverage group covering all positions under the retirement system; or

(3) As part of or as an addition to a retirement system coverage group composed of those members in positions in a retirement system who chose coverage.

§ 404.1209 Mandatorily excluded services.

Some services are mandatorily excluded from coverage under a State's agreement. They are:

(a) Services of employees who are hired to relieve them from unemployment;

(b) Services performed in an institution by a patient or inmate of the institution;

(c) Transportation service subject to the Federal Insurance Contributions Act;

(d) Certain emergency services in case of fire, storm, snow, volcano, earthquake, flood or other similar emergency; and

(e) Services other than agricultural labor or student services which would be excluded from coverage if performed for a private employer.

(f) Services covered under section 210(a)(7)(F) of the Act. (See § 404.1200(b).)

[53 FR 32976, Aug. 29, 1988, as amended at 57 FR 59911, Dec. 17, 1992]

§ 404.1210 Optionally excluded services.

Certain services and positions may, if the State requests it, be excluded from coverage. These exclusions may be applied on a statewide basis or selectively by coverage groups. They are:

(a) Services in any class or classes of elective positions;

(b) Services in any class or classes of part-time positions;

(c) Services in any class or classes of positions where the pay is on a fee basis;

(d) Any agricultural labor or student services which would also be excluded if performed for a private employer; and

(e) For modifications executed after 1994, services performed by election officials or election workers if the payments for those services in a calendar year are less than $1000 for calendar years after 1994 and before 2000, or, for calendar years after 1999, are less than the $1000 base amount as adjusted pursuant to section 218(c)(8)(B) of the Act to reflect changes in wages in the economy. We will publish this adjustment of the $1000 base amount in the FEDERAL REGISTER on or before November 1 preceding the year for which the adjustment is made.

[53 FR 32976, Aug. 29, 1988, as amended at 61 FR 38367, July 24, 1996]

§ 404.1211 Interstate instrumentalities.

For Social Security coverage purposes under section 218 of the Act, interstate instrumentalities are treated, to the extent practicable, as States, that is:

(a) They must be legally authorized to enter into an agreement with the Commissioner;

(b) They are subject to the same rules that are applied to the States;

(c) They may divide retirement systems and cover only the positions of members who want coverage; and

(d) They may provide coverage for firefighters and police officers in positions under a retirement system.

[53 FR 32976, Aug. 29, 1988, as amended at 61 FR 38368, July 24, 1996; 62 FR 38451, July 18, 1997]

§ 404.1212 Police officers and firefighters.

(a) *General*. For Social Security coverage purposes under section 218 of the Act, a police officer's or firefighter's position is any position so classified under State statutes or court decisions. Generally, these positions are in

the organized police and fire departments of incorporated cities, towns, and villages. In most States, a police officer is a member of the ''police'' which is an organized civil force for maintaining order, preventing and detecting crimes, and enforcing laws. The terms ''police officer'' and ''firefighter'' do not include services in positions which, although connected with police and firefighting functions, are not police officer or firefighter positions.

(b) *Providing coverage.* A State may provide coverage of:

(1) Police officers' and firefighters' positions not under a retirement system as part of an absolute coverage group; or

(2) Police officers' or firefighters' positions, or both, as part of a retirement system coverage group.

(c) *Police officers and firefighters in positions under a retirement system.* All States and interstate instrumentalities may provide coverage for employees in police officers' or firefighters' positions, or both, which are under a retirement system by following the majority vote referendum procedures in §404.1206(d). In addition, all interstate instrumentalities and the States listed in §404.1207 may use the desire for coverage procedures described in §404.1207.

[61 FR 38368, July 24, 1996]

HOW COVERAGE UNDER AGREEMENTS IS OBTAINED AND CONTINUES

§404.1214 Agreement for coverage.

(a) *General.* A State may enter into a written agreement with the Commissioner to provide for Social Security coverage for its employees or the employees of one or more of its political subdivisions. An interstate instrumentality may enter into a similar agreement for its employees. These agreements cover employees in groups of positions or by types of services rather than the individual employees.

(b) *Procedures.* A State or interstate instrumentality may request coverage by submitting to SSA a proposed written agreement for the desired coverage.

(c) *Authority to enter into an agreement for coverage*—(1) *Federal law.* Section 218(a) of the Act requires the Commissioner to enter into an agreement, at the request of the State, to extend Social Security coverage to the State's employees or those of its political subdivisions. Section 218(g) authorizes the Commissioner to enter into an agreement, at the request of an interstate instrumentality, to extend Social Security coverage to the employees of the interstate instrumentality.

(2) *State law.* State law must authorize a State or an interstate instrumentality to enter into an agreement with the Commissioner for Social Security coverage.

(d) *Provisions of the agreement.* The agreement must include:

(1) A description of the specific services to be covered and excluded;

(2) The State's promise to pay, to the Secretary of the Treasury, contributions equal to the sum of the taxes which would be required under the Federal Insurance Contributions Act from employers and employees if the employment were in the private sector;

(3) The State's promise to comply with the regulations the Commissioner prescribes for carrying out the provisions of section 218 of the Act; and

(4) Identification of the political subdivisions, coverage groups, or services being covered and the services that are excluded.

The agreement must be signed by the authorized State or interstate instrumentality official and the Commissioner or his or her designee.

(e) *Effective date.* The agreement must specify an effective date of coverage. However, the effective date cannot be earlier than the last day of the sixth calendar year preceding the year in which the agreement is mailed or delivered by other means to the Commissioner. The agreement is effective after the effective date.

(f) *Applicability of agreement.* The agreement establishes the continuing relationship between the Commissioner and the State or interstate instrumentality except as it is modified (see §§404.1215–404.1217).

(Approved by the Office of Management and Budget under control number 0960–0425)

[53 FR 32976, Aug. 29, 1988, as amended at 62 FR 38451, July 18, 1997; 66 FR 28836, May 25, 2001]

§ 404.1215 Modification of agreement.

(a) *General.* A State or interstate instrumentality may modify in writing its agreement, for example, to:

(1) Exclude, in limited situations, employee services or positions previously covered;

(2) Include additional coverage groups; or

(3) Include as covered services:

(i) Services of covered employees for additional retroactive periods of time; and

(ii) Services previously excluded from coverage.

(b) *Controlling date for retroactive coverage.* A State may specify in the modification a date to make all individuals in the coverage group who were in an employment relationship on that date eligible for retroactive coverage. This date is known as the controlling date for retroactive coverage. It can be no earlier than the date the modification is mailed or otherwise delivered to the Commissioner nor can it be later than the date the modification is signed by the Commissioner. If the State does not designate a controlling date, the date the modification is signed by the Commissioner is the controlling date.

(c) *Conditions for modification.* The provisions of section 218 of the Act which apply to the original agreement also apply to a modification to the agreement.

(d) *Effective date.* Generally, a modification must specify an effective date of coverage. However, the effective date cannot be earlier than the last day of the sixth calendar year preceding the year in which the modification is mailed or delivered by other means to the Commissioner. The modification is effective after the effective date.

(Approved by the Office of Management and Budget under control number 0960–0425)

[53 FR 32976, Aug. 29, 1988, as amended at 62 FR 38451, July 18, 1997; 66 FR 28836, May 25, 2001]

§ 404.1216 Modification of agreement to correct an error.

(a) *General.* If an agreement or modification contains an error, the State may correct the error by a subsequent modification to the agreement. For example, the agreement or modification incorrectly lists a covered service as an optionally excluded service or shows an improper effective date of coverage. In correcting this type of error, which affects the extent of coverage, the State must submit a modification along with evidence to establish that the error occurred. However, a modification is not needed to correct minor typographical or clerical errors. For example, an agreement or modification incorrectly lists School District No. 12 as School District No. 13. This type of error can be corrected based on a written request from the appropriate official of the State or interstate instrumentality.

(b) *Correction of errors involving erroneous reporting to the IRS—for wages paid prior to 1987.* Where a State or political subdivision makes reports and payments to the Internal Revenue Service under the provisions of the Federal Insurance Contributions Act which apply to employees in private employment in the mistaken belief that this action would provide coverage for its employees, the State may provide the desired coverage for those same periods of time by a subsequent modification to its agreement. If State law permits, the State may make that coverage effective with the first day of the first period for which the erroneous reports and payments were made. (In this instance, the limitation on retroactive coverage described in § 404.1215(d) is not applicable.) Where the State does not want to provide such retroactive coverage or is not permitted to do so by State law, the State may provide the coverage for the affected coverage group as of a specified date (§ 404.1215(b)). The coverage would then apply to the services performed by individuals as members of the coverage group

(1) Who were employees on that date, and

(2) Whose wages were erroneously reported to IRS, and

(3) For whom a refund of FICA taxes has not been obtained at the time the Commissioner.

(Approved by the Office of Management and Budget under control number 0960–0425)

[53 FR 32976, Aug. 29, 1988, as amended at 62 FR 38451, July 18, 1997; 66 FR 28836, May 25, 2001]

§ 404.1217 Continuation of coverage.

The coverage of State and local government employees continues as follows:

(a) *Absolute coverage group.* Generally, the services of an employee covered as a part of an absolute coverage group (see § 404.1205) continue to be covered indefinitely. A position covered as a part of an absolute coverage group continues to be covered even if the position later comes under a retirement system. This includes policemen's and firemen's positions which are covered with an absolute coverage group.

(b) *Retirement system coverage group.* Generally, the services of employees in positions covered as a part of a retirement system coverage group continue to be covered indefinitely. For a retirement system coverage group made up of members who chose coverage, a position continues to be covered until it is removed from the retirement system and is no longer occupied by a member who chose coverage or by a new member of the system. Coverage is not terminated because the positions are later covered under additional retirement systems or removed from coverage under a retirement system, or because the retirement system is abolished with respect to the positions. However, if the retirement system has been abolished, newly created or reclassified positions or positions in a newly created political subdivision cannot be covered as a part of the retirement system coverage group. If the retirement system is not abolished, a newly created or reclassified position is a part of the coverage group if the position would have been a part of the group had it existed earlier. If the retirement system coverage group is made up of members who chose coverage, the newly created or reclassified position is a part of the coverage group if it is occupied by a member who chose coverage or by a new member.

§ 404.1218 Resumption of coverage.

Before April 20, 1983, an agreement could be terminated in its entirety or with respect to one or more coverage groups designated by the State. Coverage of any coverage group which has been previously terminated may be resumed by a modification to the agreement.

§ 404.1219 Dissolution of political subdivision.

If a political subdivision whose employees are covered under the agreement is legally dissolved, the State shall give us satisfactory evidence of its dissolution or nonexistence. The evidence must establish that the entity is not merely inactive or dormant, but that it no longer legally exists. We will notify the State whether the evidence is satisfactory.

How To Identify Covered Employees

§ 404.1220 Identification numbers.

(a) *State and local governments.* When a State submits a modification to its agreement under section 218 of the Act, which extends coverage to periods prior to 1987, SSA will assign a special identification number to each political subdivision included in that modification. SSA will send the State a Form SSA–214–CD, ''Notice of Identifying Number,'' to inform the State of the special identification number(s). The special number will be used for reporting the pre-1987 wages to SSA. The special number will also be assigned to an interstate instrumentality if pre-1987 coverage is obtained and SSA will send a Form SSA–214–CD to the interstate instrumentality to notify it of the number assigned.

(b) *Coverage group number for coverage groups.* If a State's agreement provides coverage for a State or a political subdivision based on designated proprietary or governmental functions, the State shall furnish a list of those groups. The list shall identify each designated function and the title and business address of the official responsible for filing each designated group's wage report. SSA assigns a coverage group number to each designated group based on the information furnished in the list.

(c) *Unit numbers for payroll record units.* SSA assigns, at a State's request, unit numbers to payroll record units within a State or political subdivision. When a State requests separate payroll record unit numbers, it must furnish the following:

(1) The name of each payroll record unit for the coverage group; and

(2) The title and business address of the official responsible for each payroll unit.

(d) *Unit numbers where contribution amounts are limited—for wages paid prior to 1987.* An agreement, or modification of an agreement, may provide for the computation of contributions as prescribed in § 404.1256 for some employees of a political subdivision. In this situation, SSA assigns special unit numbers to the political subdivision to identify those employees. SSA does not assign a special unit number to a political subdivision in which the contributions for all employees are computed as prescribed in § 404.1256.

(e) *Use.* For wages paid prior to 1987, the employer shall show the appropriate SSA-issued identifying number, including any coverage group or payroll record unit number, on records, reports, returns, and claims to report wages, adjustments, and contributions.

(Approved by the Office of Management and Budget under control number 0960–0425)

[53 FR 32976, Aug. 29, 1988, as amended at 60 FR 42433, Aug. 16, 1995; 64 FR 33016, June 21, 1999; 66 FR 28836, May 25, 2001]

WHAT RECORDS OF COVERAGE MUST BE KEPT

§ 404.1225 Records—for wages paid prior to 1987.

(a) *Who keeps the records.* Every State which enters into an agreement shall keep, or require the political subdivisions whose employees are included under its agreement to keep, accurate records of all remuneration (whether in cash or in a medium other than cash) paid to employees performing services covered by that agreement. These records shall show for each employee:

(1) The employee's name, address, and Social Security number;

(2) The total amount of remuneration (including any amount withheld as contributions or for any other reason) and the date the remuneration was paid and the period of services covered by the payment;

(3) The amount of remuneration which constitutes wages (see § 404.1041 for wages and §§ 404.1047–404.1059 for exclusions from wages); and

(4) The amount of the employee's contribution, if any, withheld or collected, and if collected at a time other than the time such payment was made, the date collected. If the total remuneration (paragraph (a)(2) of this section) and the amount which is subject to contribution (paragraph (a)(3) of this section) are not equal, the reason shall be stated.

The State shall keep copies of all returns, reports, schedules, and statements required by this subpart, copies of claims for refund or credit, and copies of documents about each adjustment made under § 404.1265 or § 404.1271 as part of its records. These records may be maintained by the State or, for employees of a political subdivision, by the political subdivision. Each State shall use forms and systems of accounting as will enable the Commissioner to determine whether the contributions for which the State is liable are correctly figured and paid.

(b) *Place and period of time for keeping records.* All records required by this section shall:

(1) Be kept at one or more convenient and safe locations accessible to reviewing personnel (see § 404.1232(a));

(2) Be available for inspection by reviewing personnel at any time; and

(3) Be maintained for at least four years from the date of the event recorded. (This four-year requirement applies regardless of whether, in the meantime, the employing entity has been legally dissolved or, before April 20, 1983, the agreement was terminated in its entirety or in part.)

(Approved by the Office of Management and Budget under control number 0960–0425)

[53 FR 32976, Aug. 29, 1988, as amended at 62 FR 38451, July 18, 1997; 66 FR 28836, May 25, 2001]

REVIEW OF COMPLIANCE BY STATE WITH ITS AGREEMENT

§ 404.1230 Onsite review program.

To ensure that the services of employees covered by a State's agreement are reported and that those employees receive Social Security credit for their covered earnings, we periodically review the source records upon which a State's contribution returns and wage

reports are based. These reviews are designed:

(a) To measure the effectiveness of the State's systems for ensuring that all wages for those employees covered by its agreement are reported and Social Security contributions on those wages are paid;

(b) To detect any misunderstanding of coverage or reporting errors and to advise the State of the corrective action it must take; and

(c) To find ways to improve a State's recordkeeping and reporting operations for the mutual benefit of the State and SSA.

§ 404.1231 Scope of review.

The onsite review focuses on four areas:

(a) State's controls and recordkeeping—to assess a State's systems for assuring timely receipt, correctness, and completeness of wage reports and contribution returns;

(b) Instruction, education, and guidance a State provides local reporting officials—to assess a State's systems for assuring on a continuing basis that all reporting officials and their staffs have the necessary instructions, guidelines, and training to meet the State's coverage, reporting and recordkeeping requirements;

(c) Compliance by reporting officials—to assess a State's systems for assuring that the reporting officials in the State have adequate recordkeeping procedures, are properly applying the appropriate provisions of the State's agreement, and are complying with reporting requirements; and

(d) Quality control with prompt corrective action—to assess a State's systems for assuring that its reports and those of its political subdivisions are correct, for identifying the causes and extent of any deficiencies, and for promptly correcting these deficiencies.

§ 404.1232 Conduct of review.

(a) Generally, SSA staff personnel conduct the onsite review. Occasionally, members of the Office of the Inspector General may conduct or participate in the review.

(b) The review is done when considered necessary by SSA or, if practicable, in response to a State's specific request for a review.

(c) All pertinent source records prepared by the State or its political subdivisions are reviewed, on site, to verify the wage reports and contribution returns. We may review with the appropriate employees in a subdivision those source records and how the information is gathered, processed, and maintained. We notify the State's Social Security Administrator when we plan to make the review and request her or him to make the necessary arrangements.

(d) The review is a cooperative effort between SSA and the States to improve the methods for reporting and maintaining wage data to carry out the provisions of the agreement.

[53 FR 32976, Aug. 29, 1988, as amended at 62 FR 38451, July 18, 1997]

§ 404.1234 Reports of review's findings.

We provide the State Social Security Administrator with reports of the review's findings. These reports may contain coverage questions which need development and resolution and reporting errors or omissions for the State to correct promptly. These reports may also recommend actions the State can take to improve its information gathering, recordkeeping, and wage reporting systems, and those of its political subdivisions.

How To Report Wages and Contributions—for Wages Paid Prior to 1987

§ 404.1237 Wage reports and contribution returns—general—for wages paid prior to 1987.

(a) *Wage reports.* Each State shall report each year the wages paid each covered employee during that year. With the wage report the State shall also identify, as prescribed by SSA, each political subdivision by its assigned identification number and, where appropriate, any coverage group or payroll record unit number assigned.

(b) *Wage reports of remuneration for agricultural labor.* A State may exclude from its agreement any services of employees the remuneration for which is not wages under section 209(h)(2) of the Act. Section 209(h)(2) excludes as wages

the cash remuneration an employer pays employees for agricultural labor which is less than $150 in a calendar year, or, if the employee performs the agricultural labor for the employer on less than 20 days during a calendar year, the cash remuneration computed on a time basis. If a State does exclude the services and the individual meets the cash-pay or 20-day test described in § 404.1056, the State shall identify on the wage report and on any adjustment report each individual performing agricultural labor and the amount paid to her or him.

(c) *Contribution returns.* The State shall forward the contribution return as set out in § 404.1249(b). It shall make contribution payments under § 404.1262.

(Approved by the Office of Management and Budget under control number 0960–0425)

[53 FR 32976, Aug. 29, 1988, as amended at 66 FR 28836, May 25, 2001]

§ 404.1239 Wage reports for employees performing services in more than one coverage group—for wages paid prior to 1987.

(a) *Employee of State in more than one coverage group.* If a State employee is in more than one coverage group, the State shall report the employee's total wages, up to the annual wage limitations in § 404.1047, as though the wages were paid by only one of the coverage groups.

(b) *Employee of political subdivision in more than one coverage group.* If an employee of a political subdivision is in more than one coverage group, the State shall report the employee's total wages, up to the annual wage limitations in § 404.1047, as though the wages were paid by only one of the coverage groups.

(c) *Employee of State and one or more political subdivisions.* If an individual performs covered services as an employee of the State and an employee of one or more political subdivisions and the State agreement does not provide for limiting contributions under section 218(e)(2) of the Act as it read prior to the enactment of Pub. L. 99–509, the State and each political subdivision shall report the amount of covered wages it paid the employee up to the annual wage limitations in § 404.1047.

(d) *Employee of more than one political subdivision.* If an individual performs covered services as an employee of more than one political subdivision and the State agreement does not provide for limiting contributions under section 218(e)(2) of the Act as it read prior to the enactment of Pub. L. 99–509, each political subdivision shall report the covered wages it paid the employee up to the annual wage limitations in § 404.1047.

(e) *Employee performing covered services for more than one political entity where section 218(e)(2) of the Act is applicable.* If an agreement provides for limiting contributions under section 218(e)(2) of the Act as it read prior to the enactment of Pub. L. 99–509, the reporting officials compute the total amount of wages paid the employee by two or more political subdivisions of a State, or a State and one or more of its political subdivisions, which were subject to section 218(e)(2) of the Act. The State reports the amount of wages paid up to the annual wage limitations in § 404.1047. The employee is treated as having only one employer. If the employee also had wages not subject to section 218(e)(2) of the Act, the State shall report those wages separately.

(Approved by the Office of Management and Budget under control number 0960–0425)

[53 FR 32976, Aug. 29, 1988, as amended at 66 FR 28836, May 25, 2001]

§ 404.1242 Back pay.

(a) *Back pay defined.* Back pay is pay received in one period of time which would have been paid in a prior period of time except for a wrongful or improper action taken by an employer. It includes pay made under Federal or State laws intended to create an employment relationship (including situations where there is unlawful refusal to hire) or to protect an employee's right to wages.

(b) *Back pay under a statute.* Back pay under a statute is a payment by an employer following an award, determination or agreement approved or sanctioned by a court or administrative agency responsible for enforcing a Federal or State statute protecting an employee's right to employment or wages. Examples of these statutes are:

(1) National Labor Relations Act or a State labor relations act;

(2) Federal or State laws providing reemployment rights to veterans;

(3) State minimum wage laws; and

(4) Civil Rights Act of 1964.

Payments based on legislation comparable to and having a similar effect as those listed in this paragraph may also qualify as having been made under a statute. Back pay under a statute, excluding penalties, is wages if paid for covered employment. It is allocated to the periods of time in which it should have been paid if the employer had not violated the statute. For backpay awards affecting periods prior to 1987, a State must fill a wage report and pay the contributions due for all periods involved in the back pay award under the rules applicable to those periods.

(c) *Back pay not under a statute.* Where the employer and the employee agree on the amount payable without any award, determination or agreement approved or sanctioned by a court or administrative agency, the payment is not made under a statute. This back pay cannot be allocated to prior periods of time but must be reported by the employer for the period in which it is paid.

(Approved by the Office of Management and Budget under control number 0960–0425)

[53 FR 32976, Aug. 29, 1988, as amended at 66 FR 28836, May 25, 2001]

§404.1243 Use of reporting forms—for wages paid prior to 1987.

(a) *Submitting wage reports.* In the form and manner required by SSA, a State shall submit an annual report of the covered wages the State and its political subdivisions paid their employees. Any supplemental, adjustment, or correctional wage report filed is considered a part of the State's wage report.

(b) *Correction of errors.* If a State fails to report or incorrectly reports an employee's wages on its wage report, the State shall submit a corrective report as required by SSA.

(c) *Reporting on magnetic tape or other media.* After approval by SSA, a State may substitute magnetic tape or other media for any form required for submitting a report or reporting information.

(Approved by the Office of Management and Budget under control number 0960–0425)

[53 FR 32976, Aug. 29, 1988, as amended at 66 FR 28836, May 25, 2001]

§404.1247 When to report wages—for wages paid prior to 1987.

A State shall report wages for the calendar year in which they were actually paid. If the wages were constructively paid in a prior calendar year, the wages shall be reported for the prior year (see §404.1042(b) regarding constructive payment of wages).

(Approved by the Office of Management and Budget under control number 0960–0425)

[53 FR 32976, Aug. 29, 1988, as amended at 66 FR 28836, May 25, 2001]

§404.1249 When and where to make deposits of contributions and to file contribution returns and wage reports—for wages paid prior to 1987.

(a) *Deposits of contributions.* The State shall pay contributions in the manner required in §404.1262. (For failure to make deposits when due see §404.1265.) The contribution payment is considered made when received by the appropriate Federal Reserve bank or branch (see §404.1262). Except as provided in paragraphs (b) (2) and (3) and paragraph (c) of this section, contributions are due and payable as follows:

(1) *For wages paid before July 1, 1980.* Contribution payments for wages paid in a calendar quarter are due on the 15th day of the second month following the end of the calendar quarter during which the wages were paid.

(2) *For wages paid beginning July 1, 1980, and before January 1984.* Contribution payments for wages paid in a calendar month are due within the thirty day period following the last day of that month.

(3) *For wages paid after December 1983 and prior to 1987.* Contribution payments for wages paid in the first half of a calendar month are due on the last day of that month. Contribution payments for wages paid in the second half of that calendar month are due on the fifteenth day of the next month. (For purposes of this section, the first half of a calendar month is the first 15 days

of that month and the second half is the remainder of that month.)

(b) *Contribution returns and wage reports*—(1) *Where to be filed.* The State shall file the original copies of all contribution returns, wage reports, and adjustment reports with the SSA.

(2) *When to be filed*—(i) *For years prior to execution of agreement or modification.* If an agreement or modification provides for the coverage of employees for periods prior to 1987, the State shall pay contributions due and shall file wage reports with SSA for these periods within 90 days after the date of the notice that the Commissioner has signed the agreement or modification.

(ii) *For year of execution of agreement or modification.* If the agreement or modification provides for the coverage of employees for the year of execution of the agreement or modification, the State may, within 90 days after the date of the notice that the Commissioner has signed the agreement or modification, submit a single contribution return and pay all contributions due for the following periods:

(A) The month in which the agreement or modification was signed;

(B) Any prior months in that year; and

(C) Any subsequent months before January 1984 (half-months after December 1983) whose contribution return and payment due date is within this 90 day period. The State shall file wage reports for that year by February 28 of the year following the date of execution or within 90 days of the date of the notice, whichever is later.

(iii) *For years after execution of agreement or modification.* Except as described in paragraph (b)(2)(ii) of this section, when the State pays its contributions under paragraph (a) of this section, it shall also file a contribution return. The State shall file the wage report for any calendar year after the year of execution of the agreement or modification by February 28 of the following calendar year.

(iv) For good cause shown, and upon written request by a State, the Commissioner may allow additional time for filing the reports and paying the related contributions described in paragraphs (b)(2)(i) and (b)(2)(ii) of this section.

(3) *Due date is on a weekend, legal holiday or Federal nonworkday.* If the last day for filing the wage report falls on a weekend, legal holiday or Federal nonworkday, the State may file the wage report on the next Federal workday. If the due date for paying contributions for the wages paid in a period (as specified in paragraph (a) of this section) falls on a weekend, legal holiday or Federal nonworkday, the State shall pay the contributions and shall file the contribution return no later than—

(i) The preceding Federal workday for wages paid in July 1980 through December 1983;

(ii) The next Federal workday for wages paid before July 1980 or after December 1983.

(4) *Submitting reports and payments.* When submitting the contribution returns or wage reports the State shall release them in time to reach SSA by the due date. When submitting contribution payments as described in § 404.1262, the State shall release the payments in time to reach the appropriate Federal Reserve bank or branch by the due date. In determining when to release any returns, reports, or payments the State shall provide sufficient time for them to timely reach their destination under the method of submission used, e.g., mail or electronic transfer of funds.

(c) *Payments by third party on account of sickness or accident disability.* Where a third party makes a payment to an employee on account of sickness or accident disability which constitutes wages for services covered under a State agreement, the wages will be considered, for purposes of the deposits required under this section, to have been paid to the employee on the date on which the employer receives notice from the third party of the amount of the payment. No interest will be assessed for failure to make a timely deposit of contributions due on such wages for which a deposit was made after December 1981 and before July 1982, to the extent that the failure to make the deposit timely is due to reasonable cause and not willful neglect.

[53 FR 32976, Aug. 29, 1988, as amended at 62 FR 38451, July 18, 1997; 66 FR 28836, May 25, 2001]

§ 404.1251 Final reports—for wages paid prior to 1987.

If a political subdivision is legally dissolved, the State shall file a final report on that entity. The report shall include each coverage group whose existence ceases with that of the entity. It shall:

(a) Be marked ''final report'';

(b) Cover the period during which final payment of wages subject to the agreement is made; and

(c) Indicate the last date wages were paid.

With the final report, the State shall submit a statement showing the title and business address of the State official responsible for keeping the State's records and of each State and local official responsible for keeping the records for each coverage group whose existence is ended. The State shall also identify, as prescribed by SSA, each political subdivision by its assigned number and, where applicable, any coverage group or payroll record unit number assigned.

(Approved by the Office of Management and Budget under control number 0960–0425)

[53 FR 32976, Aug. 29, 1988, as amended at 66 FR 28836, May 25, 2001]

WHAT IS A STATE'S LIABILITY FOR CONTRIBUTIONS—FOR WAGES PAID PRIOR TO 1987

§ 404.1255 State's liability for contributions—for wages paid prior to 1987.

A State's liability for contributions equals the sum of the taxes which would be imposed by sections 3101 and 3111 of the Internal Revenue Code of 1954, if the services of the employees covered by the State's agreement were employment as defined in section 3121 of the Code. The State's liability begins when those covered services are performed, for which wages are actually or constructively paid to those individuals, including wages paid in a form other than cash (see § 404.1041(d)). If an agreement is effective retroactively, the State's liability for contributions on wages paid during the retroactive period begins with the date of execution of the agreement or applicable modification. Where coverage of a coverage group has been terminated, the State is liable for contributions on wages paid for covered services even if the wages are paid after the effective date of termination of coverage.

§ 404.1256 Limitation on State's liability for contributions for multiple employment situations—for wages paid prior to 1987.

(a) *Limitation due to multiple employment.* Where an individual in any calendar year performs covered services as an employee of a State and as an employee of one or more political subdivisions of the State, or as an employee of more than one political subdivision; and the State provides all the funds for payment of the amounts which are equivalent to the taxes imposed on the employer under FICA on that individual's remuneration for those services; and no political subdivision reimburses the State for paying those amounts; the State's agreement or modification of an agreement may provide that the State's liability for the contributions on that individual's remuneration shall be computed as though the individual had performed services in employment for only one political subdivision. The State may then total the individual's covered wages from all these governmental employers and compute the contributions based on that total subject to the wage limitations in § 404.1047.

(b) *Identification of employees in multiple employment.* An agreement or modification of an agreement providing for the computation of contributions as described in paragraph (a) of this section shall identify the class or classes of employees to whose wages this method of computing contributions applies. For example, the State may provide that such computation shall apply to the wages paid to all individuals for services performed in positions covered by a particular retirement system, or to the wages paid to all individuals who are members of any two or more coverage groups designated in an agreement or modification. The State shall promptly notify SSA if the conditions in paragraph (a) of this section are no longer met by any class or classes of employees identified in an agreement or modification.

In its notification, the State shall identify each class of employees and the date on which the conditions ceased to be met.

(c) *Effective date.* In the agreement or modification, the State shall provide that the computation of contributions shall apply to wages paid after the effective date stated in the agreement or modification. That date may be the last day of any calendar year; however, it may be no earlier than January 1 of the year in which the agreement or modification is submitted to SSA.

FIGURING THE AMOUNT OF THE STATE'S CONTRIBUTIONS—FOR WAGES PAID PRIOR TO 1987

§ 404.1260 Amount of contributions—for wages paid prior to 1987.

The State's contributions are equal to the product of the applicable contribution rate (which is equivalent to both the tax rates imposed under sections 3101 and 3111 of the Internal Revenue Code) times the amount of wages actually or constructively paid for covered services each year (subject to the wage limitations in § 404.1047) to the employee.

§ 404.1262 Manner of payment of contributions by State—for wages paid prior to 1987.

When paying its contributions, the State shall deposit its payment at the specific Federal Reserve bank or branch designated by SSA.

§ 404.1263 When fractional part of a cent may be disregarded—for wages paid prior to 1987.

In paying contributions to a Federal Reserve bank or branch, a State may disregard a fractional part of a cent unless it amounts to one-half cent or more, in which case it shall be increased to one cent. Fractional parts of a cent shall be used in computing the total of contributions.

IF A STATE FAILS TO MAKE TIMELY PAYMENTS—FOR WAGES PAID PRIOR TO 1987

§ 404.1265 Addition of interest to contributions—for wages paid prior to 1987.

(a) *Contributions not paid timely.* If a State fails to pay its contributions to the appropriate Federal Reserve bank or branch (see § 404.1262), when due under § 404.1249(a), we add interest on the unpaid amount of the contributions beginning with the date the payment was due, except as described in paragraphs (b) and (c) of this section. Interest, if charged, begins with the due date even if it is a weekend, legal holiday or Federal nonwork day. Interest is added at the rate prescribed in section 218(j) of the Act as it read prior to the enactment of Pub. L. 99–509.

(b) *Method of making adjustment.* (1) If a State shall file a contribution return and shall accompany such return with payment of contributions due and payable as reported on such return in accordance with § 404.1249 but the amount of the contributions reported and paid is less than the correct amount of contributions due and payable and the underpayment of contributions is attributable to an error in computing the contributions (other than an error in applying the rate of contributions in effect at the time the wages were paid), the State shall adjust the underpayment by reporting the additional amount due by reason of such underpayment either as an adjustment of total contributions due with the first wage report filed after notification of the underpayment by the Social Security Administration, or as a single adjustment of total contributions due with any contribution return filed prior to the filing of such wage report.

(2) If an underpayment of contributions is due to an underreporting of or a failure to report one or more employees:

(i) Where the underreporting or failure to report has been ascertained by the State, the State may cause an adjustment by filing a report within 30 days after ascertainment of the error by the State;

(ii) Where the underreporting or failure to report has been ascertained by

the Social Security Administration, a notification of underpayment shall be forwarded to the State, and the State may cause an adjustment of the underpayment by returning to the Social Security Administration, within 30 days from the date of the notification, a copy of the notification of underpayment and the State's corrected report. The report shall show the amount of wages, if any, erroneously reported for the reporting period and the correct amount of wages that should have been reported and the identification number of the State or the political subdivision for each employee who was omitted or erroneously reported. The filing to correct an underreporting of or a failure to report one or more employees' wages shall not constitute an adjustment under this section unless the wages were erroneously omitted or erroneously reported.

(c) *Payment*. The amount of each underpayment adjusted in accordance with this section shall be paid to the Federal Reserve Bank, or branch thereof, serving the district in which the State is located, without interest, at the time of reporting the adjustment; except that where any amounts due with respect to such an adjustment had been paid in error to IRS and a refund thereof timely requested from, or instituted by, IRS, the amount of underpayment adjusted in accordance with this section, plus any interest paid by IRS on the amount of such underpayment, shall be paid to the Federal Reserve Bank, or branch thereof, serving the district in which the State is located, at the time of reporting the adjustment or within 30 days after the date of issuance by IRS of the refund of the erroneous payments, whichever is later. Except as provided in the preceding sentence of this paragraph, if an adjustment is reported pursuant to paragraph (b) of this section, but the amount thereof is not paid when due, interest thereafter accrues.

(d) *Verifying contributions paid against reported wages*. We check the computation of contributions to verify that a State has paid the correct amount of contributions on the wages it reports for a calendar year (see §404.1249(b)(2)). If we determine that a State paid less than the amount of contributions due for that year, we add interest to the amount of the underpayment. We would add interest beginning with the date the unpaid contributions were initially due to the date those contributions are paid. However, if the total amount of the underpayment is 5 percent or less than 5 percent of the contributions due for a calendar year based upon the State's wage report and the State deposits the underpaid amount within 30 days after the date of our notification to the State of the amount due, the State may request that the interest on the underpaid amount be waived for good cause. This request must be made within 30 days of our notification to the State of the amount due. Such requests will be evaluated on an individual basis. The evaluation will include, but not be limited to, consideration of such factors as the circumstances causing the late payment, the State's past record of late payments and the amount involved.

Examples (1) The records of a political subdivision for the month of June are destroyed by fire. The State makes an estimated deposit of contributions for the month of June for that political subdivision and deposits contributions for the month of June for all other political subdivisions based on actual records. At the time SSA verifies contributions paid against reported wages, we discover that the State has paid only 97 percent of its total liability for the year. Within 30 days after we notify it of the amount due, the State asks that we waive the interest on the unpaid amount and the State deposits the unpaid amount. In this situation, we would waive the interest on the unpaid contributions.

(2) We would waive interest if:

(i) Some of the political subdivisions made small arithmetical errors in preparing their reports of wages,

(ii) After verification of the contributions paid against reported wages, SSA discovers that minimal additional contributions are due,

(iii) Within 30 days of our notice to the State regarding this underpayment the State, which usually makes its deposits timely, pays the amount due, and

(iv) Within that same 30 day period the State requests that we waive the interest due.

(3) We would not waive interest where a State frequently has problems depositing its contributions timely. Reasons given for the delays are, e.g., the computer was down, the 5 p.m. mail pickup was missed, one of the

school district reports was misplaced. If requested we would not waive interest on this State's late payment of contributions based upon its past record of late payments and because of the circumstances cited.

(e) *Due date is on a weekend, legal holiday or Federal nonworkday*. If the last day of the 30-day periods specified in paragraphs (b) and (d) of this section is on a weekend, legal holiday or Federal nonworkday, the State shall make the required deposit or request for waiver of payment of interest on the next Federal workday.

(Approved by the Office of Management and Budget under control number 0960–0425)

[53 FR 32976, Aug. 29, 1988, as amended at 66 FR 28836, May 25, 2001]

§ 404.1267 Failure to make timely payments—for wages paid prior to 1987.

If a State does not pay its contributions when due, the Commissioner has the authority under section 218(j) of the Act as it read prior to the enactment of Pub. L. 99–509 to deduct the amounts of the unpaid contributions plus interest at the rate prescribed from any amounts certified by her or him to the Secretary of the Treasury for payments to the State under any other provision of the Social Security Act. The Commissioner notifies the Secretary of the Treasury of the amounts deducted and requests that the amount be credited to the Trust Funds. Amounts deducted are considered paid to the State under the other provision of the Social Security Act.

[53 FR 32976, Aug. 29, 1988, as amended at 62 FR 38451, July 18, 1997]

HOW ERRORS IN REPORTS AND CONTRIBUTIONS ARE ADJUSTED—FOR WAGES PAID PRIOR TO 1987

§ 404.1270 Adjustments in general—for wages paid prior to 1987.

States have the opportunity to adjust errors in the payment of contributions. A State but not its political subdivisions is authorized to adjust errors in the underpayment of contributions. Similarly, the State shall file all claims for credits or refunds and SSA makes the credits and refunds only to the State. Generally, we do not refund contributions in cash to a State unless the State is not expected to have future liability for contributions under section 218 of the Act.

§ 404.1271 Adjustment of overpayment of contributions—for wages paid prior to 1987.

(a) *General*. If a State pays more than the correct amount of contributions, the State shall adjust the overpayment with the next contribution return filed on which the amount owed equals or exceeds the amount of the overpayment.

(b) *Overpayment due to overreporting of wages*—(1) *Report to file*. If the overpayment is due to the State's reporting more than the correct amount of wages paid to one or more employees during a reporting period and the overpayment is not adjusted under paragraph (a) of this section, the State shall file a report on the appropriate form showing:

(i) The corrected wage data as prescribed by SSA; and

(ii) The reason why the original reporting was incorrect.

(2) *Refund or credit of overpayment where section 218(e)(2) of the Act not applicable*. If:

(i) The State collected contributions from employees in excess of the amount of taxes that would have been required under section 3101 of the Internal Revenue Code; and

(ii) The State paid to the Secretary of the Treasury those contributions plus a matching amount in excess of the taxes which would have been required from an employer under section 3111 of the Code; and

(iii) The services of the employees in question would have constituted employment under section 3121(b) of the Code; and

(iv) Section 218(e)(2) of the Act as it read prior to the enactment of Pub. L. 99–509 does not apply (see § 404.1256(a)), then the State shall adjust the overpaid contributions under paragraph (b)(1) of this section. With its adjustment the State, where appropriate, shall include on the prescribed form a statement that the employees from whom the excess contributions were collected have not received nor expect to receive a refund of excess contributions under section 6413(c) of the Internal Revenue Code of 1954 (see

§ 404.1275(b)). Generally, if the State does not include this statement with its adjustment request, we only refund or credit the State for up to one-half of the overpaid amount.

(c) *Refund or credit of overpayment where section 218(e)(2) of the Act applicable*—(1) *General*. If—

(i) The overreporting of the amount of wages paid to one or more employees during a reporting period(s) is due to a computation of contributions under § 404.1256 for a year or years prior to the year in which the agreement or modification providing for the computation is entered into, or

(ii) The overreporting is due to a failure to compute § 404.1256,

the State shall adjust the overpayment under paragraph (b)(1) of this section. An overpayment due to overreported wages which does not result from the computation of contributions or a failure to compute contributions under § 404.1256 shall also be adjusted by the State under paragraph (b)(1) of this section. If the adjustment of the overpayment results in an underreporting of wages for any employee by the State or any political subdivision, the State shall include with the report adjusting the overpayment a report adjusting each underreporting. If the adjustment of the overpayment does not result in an underreporting of wages for any employee by the State or any political subdivision, the State shall include with the report adjusting the overpayment a statement that the adjustment of the overpayment does not result in any underreporting.

(2) *Amount of refund or credit*. If the State collects excess contributions from employees, the State's claim for refund or credit is limited to the overpaid amounts. (See § 404.1275 relating to adjustment of employee contributions.) If—

(i) The State collected the correct amount of contributions from employees based on the amount of wages reported and the Forms W-2 issued to the employees show only the amount of contributions actually collected, but the amount of wages reported is being adjusted downward, or

(ii) The State collects excess contributions from employees but Forms W-2 have not been issued for an amount of wages which is being adjusted downward, the State may claim a refund or credit for the overpaid amounts. Where the State's claim for refund or credit is for the total overpaid amount, the adjustment report shall include a statement that excess contributions have not been collected from employees, or, where excess contributions have been collected, that Forms W-2 have not been issued and that, when issued, they will show the correct amount of employee contributions.

(Approved by the Office of Management and Budget under control number 0960–0425)

[53 FR 32976, Aug. 29, 1988, as amended at 66 FR 28836, May 25, 2001]

§ 404.1272 Refund or recomputation of overpayments which are not adjustable—for wages paid prior to 1987.

(a) *General*. If a State pays more than the correct amount of contributions or interest to the appropriate Federal Reserve bank or branch (see § 404.1262), and no adjustment in the amount of reported wages is necessary, that State may file a claim for refund or recomputation of the overpayment.

(b) *Form of claim*. No special form is required to make a claim for a refund or recomputation. If a credit is taken under § 404.1271, a claim is not required.

(c) *Proof of representative capacity*. If a report or return is made by an authorized official of the State who ceases to act in an official capacity and a claim for a refund is made by a successor official, the successor official must submit with the claim written evidence showing that he or she has the authority to make a claim for and receive a refund of any contributions paid by the former official. The written evidence is not necessary if the successor official has previously filed one or more reports or returns which contain her or his signature and official title.

(Approved by the Office of Management and Budget under control number 0960–0425)

[53 FR 32976, Aug. 29, 1988, as amended at 66 FR 28836, May 25, 2001]

§ 404.1275 Adjustment of employee contributions—for wages paid prior to 1987.

The amount of contributions a State deducts from an employee's remuneration for covered services, or any correction of that amount, is a matter between the employee and the State or political subdivision. The State shall show any correction of an employee's contribution on statements it furnishes the employee under § 404.1225 of this part. Where the State issues an employee a Form W-2 and then submits an overpayment adjustment but claims less than the total overpaid amount as a refund or credit, the State shall not correct the previously issued Form W-2 to reflect that adjustment.

[53 FR 32976, Aug. 29, 1988, as amended at 65 FR 16813, Mar. 30, 2000]

§ 404.1276 Reports and payments erroneously made to Internal Revenue Service-transfer of funds—for wages paid prior to 1987.

(a) *General.* In some instances, State or local governmental entities not covered under an agreement make reports and pay contributions to IRS under the Federal Insurance Contributions Act (FICA) procedures applicable to private employers in the mistaken belief that this provides Social Security coverage under section 218 of the Act for their employees. In other instances, entities which are covered under an agreement erroneously report to IRS, or a State or local government employee reports other employees to IRS or reports to IRS as a self-employed individual. Where these reports and payments are erroneously made to IRS, the State may correct the error and obtain coverage under its agreement as described in paragraphs (b) through (f) of this section.

(b) *Political subdivision not included in the State agreement.* We notify the State that if it desires coverage, it may be provided by either a regular modification or an error modification, depending on the circumstances (§§ 404.1215 and 404.1216). In most cases, the State may obtain coverage by a regular modification. If a regular modification cannot be used (e.g., State law does not permit the retroactive effective date which would be desired), the State may use an error modification. The effective date of either modification depends on the facts of the situation being corrected.

(c) *Political subdivision included in the agreement.* If a political subdivision included in the agreement erroneously makes reports and payments under FICA procedures, the State must correct the reportings for periods not barred by the statute of limitations. If the covered entity reported both under the agreement and under FICA procedures, we notify IRS and make necessary corrections in the earnings records. We also advise the State that the entity which reported under FICA procedures should request a refund of payments erroneously made to IRS.

(d) *State and local government employees erroneously reported as employees of individual or as self-employed*—(1) *Covered entity.* If employees of a covered entity are erroneously reported as employees of an individual or as self-employed, we advise the State that the individual who made the reports should request a refund from IRS for periods not barred by the statute of limitations. We require the State to file correctional reports and returns for any periods open under the State and local statute of limitations.

(2) *Noncovered entity.* We advise the State that the individual who made the reports should request a refund from IRS for the periods not barred by the statute of limitations. If the State wishes to provide coverage, it must submit a modification as discussed in paragraph (b) of this section. If the State does not wish to provide coverage, we void the reports. Amounts reported for periods barred by the statute of limitations remain on the earnings records.

(e) *Filing wage reports and paying contributions.* Generally, the entity or individual that makes the erroneous reports and payments requests the refund from IRS for periods not barred by the statute of limitations. The State files the necessary reports with SSA and pays any contributions due. The reports shall conform to the coverage provided by the agreement to the extent permitted by the statute of limitations. The due date for these reports depends on whether original reports or

adjustment reports are involved. Reports and contribution returns for the entire retroactive period of coverage provided by a regular or error modification are due 90 days after the date of execution of the modification. The time limitations for issuing assessments and credits or refunds extend from this due date. Thus, SSA may issue assessments or credits or refunds for periods barred to refund by IRS. The State may request that reports and payments for the IRS barred periods be considered made under the agreement as described in paragraph (f) of this section.

(f) *Use of transfer procedure.* In limited situations, the State may request that reports and payments the State or a political subdivision (but not an individual) erroneously made under FICA procedures and which have been posted to the employee's earnings record be considered made under the State's agreement. We use a transfer procedure to do this. The transfer procedure may be used only where

(1) The periods are open to assessment under the State and local statute of limitations;

(2) The erroneous reports to be transferred are posted to SSA's records;

(3) The periods are barred to refund under the IRS statute of limitations; and

(4) A refund is not obtained from IRS by the reporting entity.

HOW OVERPAYMENTS OF CONTRIBUTIONS ARE CREDITED OR REFUNDED—FOR WAGES PAID PRIOR TO 1987

§ 404.1280 Allowance of credits or refunds—for wages paid prior to 1987.

If a State pays more than the amount of contributions due under an agreement, SSA may allow the State, subject to the time limitations in § 404.1282 and the exceptions to the time limitations in § 404.1283, a credit or refund of the overpayment.

§ 404.1281 Credits or refunds for periods of time during which no liability exists—for wages paid prior to 1987.

If a State pays contributions for any period of time for which contributions are not due, but the State is liable for contributions for another period, we credit the amount paid against the amount of contributions for which the State is liable. We refund any balance to the State.

§ 404.1282 Time limitations on credits or refunds—for wages paid prior to 1987.

(a) *General.* To get a credit or refund, a State must file a claim for a credit or refund of the overpaid amount with the Commissioner before the applicable time limitation expires. The State's claim for credit or refund is considered filed with the Commissioner when it is delivered or mailed to the Commissioner. Where the time limitation ends on a weekend, legal holiday or Federal nonworkday, we consider a claim timely filed if it is filed on the next Federal workday.

(b) *Time limitation.* Subject to the exceptions in § 404.1283, a State must file a claim for credit or refund of an overpayment before the end of the latest of the following time periods:

(1) 3 years, 3 months, and 15 days after the year in which the wages in question were paid or alleged to have been paid; or

(2) 3 years after the due date of the payment which included the overpayment; or

(3) 2 years after the overpayment was made to the Secretary of the Treasury.

[53 FR 32976, Aug. 29, 1988, as amended at 62 FR 38451, July 18, 1997]

§ 404.1283 Exceptions to the time limitations on credits or refunds—for wages paid prior to 1987.

(a)(1) *Extension by agreement.* The applicable time period described in § 404.1282 for filing a claim for credit for, or refund of, an overpayment may, before the expiration of such period, be extended for no more than 6 months by written agreement between the State and the Commissioner. The agreement must involve and identify a known issue or reporting error. It must also identify the periods involved, the time limitation which is being extended and the date to which it is being extended, and the coverage group(s) and position(s) or individual(s) to which the agreement applies. The extension of the period of limitation shall not become effective until the agreement is

signed by the appropriate State official and the Commissioner. (See § 404.3(c) for the applicable rule where periods of limitation expire on nonwork days.) A claim for credit or refund filed by the State before the extended time limit ends shall be considered to have been filed within the time period limitation specified in section 218(r)(1) of the Act as it read prior to the enactment of Pub. L. 99–509. (See § 404.1282.)

(2) *Reextension*. An extension agreement provided for in paragraph (a)(1) of this section may be reextended by written agreement between the State and the Commissioner for no more than 6 months at a time beyond the expiration of the prior extension or reextension agreement, and only if one of the following conditions is met:

(i) Litigation (including intrastate litigation) or a review under §§ 404.1290 or 404.1297 involving wage reports or corrections on the same issue is pending; or

(ii) The State is actively pursuing corrections of a known error which require additional time to complete; or

(iii) The Social Security Administration is developing a coverage or wage issue which was being considered before the statute of limitations expired and additional time is needed to make a determination; or

(iv) The Social Security Administration has not issued to the State a final audit statement on the State's wage or correction reports; or

(v) There is pending Federal legislation which may substantially affect the issue in question, or the issue has national implications.

(b) *Deletion of wage entry on employee's earnings record*. If the Commissioner, under section 205(c)(5) (A), (B), or (E) of the Act, deletes a wage entry on an individual's earnings record, a claim for credit or refund of the overpayment resulting from the deletion is considered filed within the applicable time limitations in § 404.1282 if

(1) The State files the claim before the Commissioner's decision regarding the deletion of the wage entry from the individual's earnings record becomes final or

(2) The State files a claim regarding the deletion of the wage entry from the individual's earnings record which entry is erroneous because of fraud.

[53 FR 32976, Aug. 29, 1988, as amended at 62 FR 38451, July 18, 1997]

§ 404.1284 Offsetting underpayments against overpayments—for wages paid prior to 1987.

(a) *State fails to make adjustment for allowance of credit*. If SSA notifies a State that a credit is due the State, and the State does not make the adjustment for the allowance of the credit, SSA offsets the credit against any contributions or interest due. Before making the offset, SSA will give the State an opportunity to make the adjustment.

(b) *State fails to make adjustment for underpayment of contributions or interest due*. If SSA notifies a State that contributions or interest are due, and the State does not pay the contributions or interest, SSA offsets the contributions or interest due against any credit due the State. Before making the offset, SSA will give the State an opportunity to pay the underpayment or interest due.

How Assessments for Underpayments of Contributions Are Made—for Wages Paid Prior to 1987

§ 404.1285 Assessments of amounts due—for wages paid prior to 1987.

(a) A State is liable for any amount due (which includes contributions or interest) under an agreement until the Commissioner is satisfied that the amount has been paid to the Secretary of the Treasury. If the Commissioner is not satisfied that a State has paid the amount due, the Commissioner issues an assessment for the amount due subject to the time limitations in § 404.1286 and the exceptions to the time limitations in §§ 404.1287 and 404.1289. If detailed wage information is not available, the assessment is issued based on the following:

(1) The largest number of individuals whose services are known to be covered under the agreement is used for computation purposes;

(2) The individuals are assumed to have maximum creditable earnings each year;

(3) The earnings are considered wages for covered services; and

(4) The amount computed is increased by twenty percent to insure that all covered wages are included in the assessment.

(b) If the State pays the amount assessed and the assessed amount is later determined to be more than the amount actually due, we issue a refund or credit to that State for the excess amount. When the assessment is issued within the applicable time limitation, there is no time limit on collecting the amount due. An assessment is issued on the date that it is mailed or otherwise delivered to the State.

[53 FR 32976, Aug. 29, 1988, as amended at 62 FR 38451, July 18, 1997]

§ 404.1286 Time limitations on assessments—for wages paid prior to 1987.

(a) Subject to the exceptions to the time limitations in §§ 404.1287 and 404.1289, a State is not liable for an amount due under an agreement unless the Commissioner makes an assessment for that amount before the later of the following periods ends:

(1) Three years, 3 months, and 15 days after the year in which the wages, upon which the amount is due, were paid; or

(2) Three years after the date the amount became due.

(b) Where the time limitation ends on a weekend, legal holiday or Federal nonworkday, an assessment is considered timely if the Commissioner makes the assessment on the next Federal workday.

[53 FR 32976, Aug. 29, 1988, as amended at 62 FR 38451, July 18, 1997]

§ 404.1287 Exceptions to the time limitations on assessments—for wages paid prior to 1987.

(a)(1) *Extension by agreement*. The applicable time period described in § 404.1286 for assessment of an amount due may, before the expiration of such period, be extended for no more than 6 months by written agreement between the State and the Commissioner. The agreement must involve and identify a known issue or reporting error. It must also identify the periods involved, the time limitation which is being extended and the date to which it is being extended, and the coverage group(s) and position(s) or individual(s) to which the agreement applies. The extension of the period of limitation shall not become effective until the agreement is signed by the appropriate State official and the Commissioner. (See § 404.3(c) for the applicable rule where periods of limitation expire on nonwork days.) An assessment made by the Commissioner before the extended time limit ends shall be considered to have been made within the time period limitation specified in section 218(q)(2) of the Act as it read prior to the enactment of Pub. L. 99–509. (See § 404.1286.)

(2) *Reextension*. An extension agreement provided for in paragraph (a)(1) of this section may be reextended by written agreement between the State and the Commissioner for no more than 6 months at a time beyond the expiration of the prior extension or reextension agreement, and only if one of the following conditions is met:

(i) Litigation (including intrastate litigation) or a review under § 404.1290 or § 404.1297 involving wage reports or corrections on the same issue is pending; or

(ii) The State is actively pursuing corrections of a known error which require additional time to complete; or

(iii) The Social Security Administration is developing a coverage or wage issue which was being considered before the statute of limitations expired and additional time is needed to make a determination; or

(iv) The Social Security Administration has not issued to the State a final audit statement on the State's wage or correction reports; or

(v) There is pending Federal legislation which may substantially affect the issue in question, or the issue has national implications.

(b) *The 365-day period*. If a State files a report before the applicable time limitation in § 404.1286 (or any extension under paragraph (a) of this section) ends and makes no payment or pays less than the correct amount due, the Commissioner may assess the State for the amount due after the applicable time limitation has ended. However, the Commissioner must make the assessment no later than the 365th day after the day the State makes payment

to the Secretary of the Treasury. The Commissioner can only make this assessment on the wages paid to the reported individuals for the reported periods. The Commissioner, in making this assessment, credits the amount paid by the State on these individuals' wages for those reported periods.

(c) *Revision of employee's earnings record.* If, under section 205(c)(5) (A) or (B) of the Act, the Commissioner credits wages to an individual's earnings record, the Commissioner may make an assessment for any amount due on those wages before the Commissioner's decision on revising the individual's earnings record becomes final. (Sections 404.822(c) (1) and (2) describe the time limits for revising an earnings record where an individual has applied for monthly benefits or a lump-sum death payment or requested that we correct his earnings record.)

(d) *Overpayment of contributions on wages of employee having other wages in a period barred to assessment.* If the Commissioner allows a State a credit or refund of an overpayment for wages paid or alleged to have been paid an individual in a calendar year but the facts upon which the allowance is based establish that contributions are due on other wages paid that individual in that year which are barred to assessment, we may make an assessment notwithstanding the periods of limitation in § 404.1286. The assessment, however, must be made before or at the time we notify the State of the allowance of the credit or refund. In this situation, the Commissioner reduces the amount of the State's credit or refund by the assessed amount and notifies the State accordingly. For purposes of this paragraph, the assessment shall only include contributions and not interest as provided for in section 218(j) of the Act as it read prior to the enactment of Pub. L. 99–509.

Example: The State files an adjustment report timely to correct an error in the amount reported as wages for an employee. The correction reduces the employee's wages for the year to less than the maximum amount creditable. The employee has other earnings in the same year which were not reported because of the previously reported maximum amounts. The applicable time limitation for assessing contributions on wages for the year has expired before the credit was allowed. The Commissioner may assess for the underpaid contributions but no later than thd date of the notice to the State that its claim for a credit had been allowed.

(e) *Evasion of payment.* The Commissioner may make an assessment of an amount due at any time where the State's failure to pay the amount due results from the fraudulent attempt of an officer or employee of the State or political subdivision to defeat or evade payment of that amount.

[53 FR 32976, Aug. 29, 1988, as amended at 62 FR 38451, July 18, 1997]

§ 404.1289 Payment after expiration of time limitation for assessment—for wages paid prior to 1987.

The Commissioner accepts wage reports filed by a State even though the applicable time limitation described in § 404.1286 (or as the time limitation is extended under § 404.1287) has expired, provided:

(a) The State pays to the Secretary of the Treasury the amount due on the wages paid to employees performing services in the coverage group in the calendar years for which the wage reports are being made; and

(b) The State agrees in writing with the Secretary to extend the time limitation for all employees in the coverage group in the calendar years for which the wage reports are being made.

In this situation, the time period for assessment is extended until the Commissioner notifies the State that the wage reports are accepted. Where the State pays the amount due within the time period as extended under this section, the amount shall not include interest as provided for in section 218(j) of the Act as it read prior to the enactment of Pub. L. 99–509.

[53 FR 32976, Aug. 29, 1988, as amended at 62 FR 38451, July 18, 1997]

SECRETARY'S REVIEW OF DECISIONS ON CREDITS, REFUNDS, OR ASSESSMENTS—FOR WAGES PAID PRIOR TO 1987

§ 404.1290 Review of decisions by the Secretary—for wages paid prior to 1987.

What decisions will be reviewed. A State, under section 218(s) of the Act as it read prior to the enactment of Pub.

L. 99–509, may request review of an assessment of an amount due from the State, an allowance to the State of a credit or refund of an overpayment, or a disallowance of the State's claim for credit or refund of an overpayment. The Commissioner may review regardless of whether the amount assessed has been paid or whether the credit or refund has been accepted by the State. Prior to the Commissioner's review, however, an assessment, allowance or disallowance may be reconsidered under §§ 404.1291 through 404.1293.

[53 FR 32976, Aug. 29, 1988, as amended at 62 FR 38451, July 18, 1997]

§ 404.1291 Reconsideration—for wages paid prior to 1987.

After the State requests review of the assessment or allowance or disallowance of a credit or refund, and prior to the Commissioner's review, that decision may be reconsidered, and affirmed, modified, or reversed. We notify the State of the reconsidered determination and the basis for it. The State may request the Commissioner to review this reconsidered determination under § 404.1294(b). In limited situations, SSA and the State may agree that the reconsideration process should be waived, e.g., where major policy is at issue.

§ 404.1292 How to request review—for wages paid prior to 1987.

(a) *Form of request.* No particular form of request is required. However, a written request for review must:

(1) Identify the assessment, allowance or disallowance being questioned;

(2) Describe the specific issue on which the review is requested;

(3) Contain any additional information or argument relevant to that issue; and

(4) Be signed by an official authorized to request the review on behalf of the State.

(b) *Submitting additional material.* A State has 90 days from the date it requests review to submit additional evidence it wishes considered during the review process. The time limit for submitting additional evidence may be extended upon written request of the State and for good cause shown.

(Approved by the Office of Management and Budget under control number 0960–0425)

[53 FR 32976, Aug. 29, 1988, as amended at 66 FR 28836, May 25, 2001]

§ 404.1293 Time for filing request for review—for wages paid prior to 1987.

(a) *Time for filing.* The State must file its request for review within 90 days after the date of the notice of assessment, allowance, or disallowance. Usually, the date of the request for review is considered the filing date. Where the 90-day period ends on a weekend, legal holiday or Federal nonworkday, a request filed on the next Federal workday is considered as timely filed.

(b) *Extension of time.* For good cause shown, and upon written application by a State filed prior to the expiration of the time for filing a request for review, additional time for filing the request may be allowed.

§ 404.1294 Notification to State after reconsideration—for wages paid prior to 1987.

(a) The State will be notified in writing of the reconsidered determination on the assessment, allowance, or disallowance, and the basis for the determination.

(b) If the State does not agree with the reconsidered determination, it has 90 days from the date of notice of the reconsidered determination to request the Commissioner to review that determination. The rules on what the request should contain and the time for filing the request are the same as in §§ 404.1292 and 404.1293.

§ 404.1295 Commissioner's review—for wages paid prior to 1987.

Upon request by the State, the Commissioner will review the reconsidered determination (or the assessment, allowance or disallowance as initially issued if reconsideration is waived under § 404.1291). If necessary, the Commissioner may request the State to furnish additional evidence. Based upon the evidence considered in connection with the assessment, allowance

or disallowance and any additional evidence submitted by the State or otherwise obtained by the Commissioner, the Commissioner affirms, modifies, or reverses the assessment, allowance or disallowance.

§ 404.1296 Commissioner's notification to the State—for wages paid prior to 1987.

The Commissioner notifies the State in writing of the decision on the assessment, allowance, or disallowance, and the basis for the decision.

HOW A STATE MAY SEEK COURT REVIEW OF COMMISSIONER'S DECISION—FOR WAGES PAID PRIOR TO 1987

§ 404.1297 Review by court—for wages paid prior to 1987.

(a) *Who can file civil action in court.* A State may file a civil action under section 218(t) of the Act as it read prior to the enactment of Pub. L. 99–509 requesting a district court of the United States to review any decision the Commissioner makes under section 218(s) of the Act as it read prior to the enactment of Pub. L. 99–509 concerning the assessment of an amount due, the allowance of a credit or refund, or the disallowance of a claim for credit or refund.

(b) *Where the civil action must be filed.* A State must file the civil action in the district court of the United States for the judicial district in which the State's capital is located. If the civil action is brought by an interstate instrumentality, it must file the civil action in the district court of the United States for the judicial district in which the instrumentality's principal office is located. The district court's judgment is final except that it is subject to review in the same manner as judgments of the court in other civil actions.

(c) *No interest on credit or refund of overpayment.* SSA has no authority to pay interest to a State after final judgment of a court involving a credit or refund of an overpayment made under section 218 of the Act.

[53 FR 32976, Aug. 29, 1988, as amended at 62 FR 38451, July 18, 1997]

§ 404.1298 Time for filing civil action—for wages paid prior to 1987.

(a) *Time for filing.* The State must file the civil action for a redetermination of the correctness of the assessment, allowance or disallowance within 2 years from the date the Commissioner mails to the State the notice of the decision under § 404.1296. Where the 2-year period ends on a Saturday, Sunday, legal holiday or Federal nonwork day, an action filed on the next Federal workday is considered timely filed.

(b) *Extension of time for filing.* The Commissioner, for good cause shown, may upon written application by a State filed prior to the end of the two-year period, extend the time for filing the civil action.

§ 404.1299 Final judgments—for wages paid prior to 1987.

(a) *Overpayments.* Payment of amounts due to a State required as the result of a final judgment of the court shall be adjusted under §§ 404.1271 and 404.1272.

(b) *Underpayments.* Wage reports and contribution returns required as the result of a final judgment of the court shall be filed under §§ 404.1237–404.1251. We will assess interest under § 404.1265 where, based upon a final judgment of the court, contributions are due from a State because the amount of contributions assessed was not paid by the State or the State had used an allowance of a credit or refund of an overpayment.

Subpart N—Wage Credits for Veterans and Members of the Uniformed Services

AUTHORITY: Secs. 205 (a) and (p), 210 (l) and (m), 215(h), 217, 229, and 702(a)(5) of the Social Security Act (42 U.S.C. 405 (a) and (p), 410 (l) and (m), 415(h), 417, 429, and 902(a)(5)).

SOURCE: 45 FR 16464, Mar. 14, 1980, unless otherwise noted.

GENERAL

§ 404.1301 Introduction.

(a) The Social Security Act (Act), under section 217, provides for noncontributory wage credits to veterans who served in the active military or

naval service of the United States from September 16, 1940, through December 31, 1956. These individuals are considered World War II or post-World War II veterans. The Act also provides for noncontributory wage credits to certain individuals who served in the active military or naval service of an allied country during World War II. These individuals are considered World War II veterans. In addition, certain individuals get wage credits, under section 229 of the Act, for service as members of the uniformed services on active duty or active duty for training beginning in 1957 when that service was first covered for social security purposes on a contributory basis through 2001. These individuals are considered members of the uniformed services.

(b) World War II or post-World War II veterans receive wage credits based on the length of active military or naval service, type of separation from service and, in some cases, whether the veteran is receiving another Federal benefit. However, a member of a uniformed service receives wage credits regardless of length of service, type of separation, or receipt of another Federal benefit.

(c) The Social Security Administration (SSA) uses these wage credits, along with any covered wages or self-employment income of the veteran or member of a uniformed service, to determine entitlement to, and the amount of, benefits and the lump-sum death payment that may be paid to them, their dependents or survivors under the old-age, survivors', and disability insurance programs. These wage credits can also be used by the veteran or member of the uniformed service to meet the insured status and quarters of coverage requirements for a period of disability.

(d) This subpart tells how veterans or members of the uniformed services obtain wage credits, what evidence of service SSA requires, how SSA uses the wage credits, and how the wage credits are affected by payment of other benefits.

(e) This subpart explains that certain World War II veterans who die are considered (deemed) fully insured. This gives those veterans' survivors the same benefit rights as if the veterans were actually fully insured when they died.

(f) The rules are organized in the following manner:

(1) Sections 404.1310 through 404.1313 contain the rules on World War II veterans. We discuss who may qualify as a World War II veteran, how we determine whether the 90-day active service requirement for a World War II veteran is met, what we consider to be World War II active military or naval service, and what we do not consider to be World War II active military or naval service.

(2) Sections 404.1320 through 404.1323 contain the rules on post-World War II veterans. We discuss who may qualify as a post-World War II veteran, how we determine whether the 90-day active service requirement for a post-World War II veteran is met, what we consider to be post-World War II active military or naval service, and what we do not consider to be post-World War II active military or naval service.

(3) In §404.1325 we discuss what is a *separation under conditions other than dishonorable*. The law requires that a World War II or post-World War II veteran's separation from active military or naval service be other than dishonorable for the veteran to get wage credits.

(4) Section 404.1330 contains the rules on members of the uniformed services. We discuss who may qualify as a member of a uniformed service.

(5) In §§404.1340 through 404.1343, we discuss the amount of wage credits for veterans and members of the uniformed services, situations which may limit the use of wage credits for World War II and post-World War II veterans, and situations in which the limits do not apply.

(6) Sections 404.1350 through 404.1352 contain the rules on deemed insured status for World War II veterans. We discuss when deemed insured status applies, the amount of wage credits used for deemed insured World War II veterans, how the wage credits affect survivors' social security benefits, and when deemed insured status does not apply.

(7) Sections 404.1360 through 404.1363 contain the rules on the effect of other

benefits on the payment of social security benefits and lump-sum death payments based on wage credits for veterans. We discuss what happens when we learn of a determination that a Veterans Administration pension or compensation is payable or that a Federal benefit is payable before or after we determine entitlement to a montly benefit or lump-sum death payment based on the death of the veteran.

(8) Sections 404.1370 and 404.1371 contain the rules on what we accept as evidence of a World War II and post-World War II veteran's active military or naval service, including date and type of separation, and what we accept as evidence of entitlement to wage credits for membership in a uniformed service during the years 1957 through 1967.

[45 FR 16464, Mar. 14, 1980, as amended at 70 FR 11865, Mar. 10, 2005]

§ 404.1302 Definitions.

As used in this subpart—

Act means the Social Security Act, as amended.

Active duty means periods of time an individual is on full-time duty in the active military or naval service after 1956 and includes active duty for training after 1956.

Active service means periods of time prior to 1957 an individual was on full-time duty in the active military or naval service. It does not include totaling periods of active duty for training purposes before 1957 which are less than 90 days.

Allied country means a country at war on September 16, 1940, with a country with which the United States was at war during the World War II period. Each of the following countries is considered an allied country: Australia, Belgium, Canada, Czechoslovakia, Denmark, France, India, Luxembourg, the Netherlands, New Zealand, Norway, Poland, Union of South Africa, and the United Kingdom.

Domiciled in the United States means an individual has a true, fixed, and permanent home in the United States to which the individual intends to return whenever he or she is absent.

Federal benefit means a benefit which is payable by another Federal agency (other than the Veterans Administration) or an instrumentality owned entirely by the United States under any law of the United States or under a program or pension system set up by the agency or instrumentality.

Post-World War II period means the time period July 25, 1947, through December 31, 1956.

Reserve component means Army Reserve, Naval Reserve, Marine Corps Reserve, Air Force Reserve, Coast Guard Reserve, National Guard of the United States or Air National Guard of the United States.

Resided in the United States means an individual had a place where he or she lived, whether permanently or temporarily, in the United States and was bodily present in that place.

Survivor means you are a parent, widow, divorced wife, widower, or child of a deceased veteran or member of a uniformed service.

United States means the 50 States, the District of Columbia, the Commonwealth of Puerto Rico, the Virgin Islands, Guam, and American Samoa.

Veteran means an individual who served in the active military or naval service of the United States and was discharged or released from that service under conditions other than dishonorable. For a more detailed definition of the World War II veteran and a post-World War II veteran, see §§ 404.1310 and 404.1320.

Wage credit means a dollar amount we add to the earnings record of a veteran of the World War II or the post-World War II period. It is also a dollar amount we add to the earnings record of a member of a uniformed service who was on active duty from 1957 through 2001. The amount is set out in the Act and is added for each month, calendar quarter, or calendar year of service as required by law.

We, us, or *our* means the Social Security Administration.

World War II period means the time period September 16, 1940, through July 24, 1947.

You or *your* means a veteran, a veteran's survivor or a member of a uniformed service applying for or entitled to a social security benefit or a lump-sum death payment.

[45 FR 16464, Mar. 14, 1980, as amended at 70 FR 11865, Mar. 10, 2005]

WORLD WAR II VETERANS

§404.1310 Who is a World War II veteran.

You are a World War II veteran if you were in the active service of the United States during the World War II period and, if no longer in active service, you were separated from that service under conditions other than dishonorable after at least 90 days of active service. The 90-day active service requirement is discussed in §404.1311.

§404.1311 Ninety-day active service requirement for World War II veterans.

(a) The 90 days of active service required for World War II veterans do not have to be consecutive if the 90 days were in the World War II period. The 90-day requirement cannot be met by totaling the periods of active duty for training purposes which were less than 90 days.

(b) If, however, all of the 90 days of active service required for World War II veterans were not in the World War II period, the 90 days must (only in those circumstances) be consecutive if the 90 days began before September 16, 1940, and ended on or after that date, or began before July 25, 1947, and ended on or after that date.

(c) The 90 days of active service is not required if the World War II veteran died in service or was separated from service under conditions other than dishonorable because of a disability or injury which began or worsened while performing service duties.

§404.1312 World War II service included.

Your service was in the active service of the United States during the World War II period if you were in the—

(a) Army, Navy, Marine Corps, or Coast Guard, or any part of them;

(b) Commissioned corps of the United States Public Health Service and were—

(1) On active commissioned service during the period beginning September 16, 1940, through July 28, 1945, and the active service was done while on detail to the Army, Navy, Marine Corps, or Coast Guard; or

(2) On active commissioned service during the period beginning July 29, 1945, through July 24, 1947, regardless of whether on detail to the Army, Navy, Marine Corps, or Coast Guard;

(c) Commissioned corps of the United States Coast and Geodetic Survey and were—

(1) During the World War II period—

(i) Transferred to active service with the Army, Navy, Marine Corps, or Coast Guard; or

(ii) Assigned to active service on military projects in areas determined by the Secretary of Defense to be areas of immediate military hazard; or

(2) On active service in the Philippine Islands on December 7, 1941; or

(3) On active service during the period beginning July 29, 1945, through July 24, 1947;

(d) Philippine Scouts and performed active service during the World War II period under the direct supervision of recognized military authority;

(e) Active service of an allied country during the World War II period and—

(1) Had entered into that active service before December 9, 1941;

(2) Were a citizen of the United States throughout that period of active service or lost your United States citizenship solely because of your entrance into that service;

(3) Had resided in the United States for a total of four years during the five-year period ending on the day you entered that active service; and

(4) Were domiciled in the United States on that day; or

(f) Women's Army Auxiliary Corps, during the period May 14, 1942, through September 29, 1943, and performed active service with the Army, Navy, Marine Corps, or Coast Guard after September 29, 1943.

§404.1313 World War II service excluded.

Your service was not in the active service of the United States during the World War II period if, for example, you were in the—

(a) Women's Army Auxiliary Corps, except as described in §404.1312(f);

(b) Coast Guard Auxiliary;

(c) Coast Guard Reserve (Temporary) unless you served on active full-time

service with military pay and allowances;

(d) Civil Air Patrol; or

(e) Civilian Auxiliary to the Military Police.

POST-WORLD WAR II VETERANS

§ 404.1320 Who is a post-World War II veteran.

You are a post-World War II veteran if you were in the active service of the United States during the post-World War II period and, if no longer in active service, you were separated from the service under conditions other than dishonorable after at least 90 days of active service. The 90-day active service requirement is discussed in § 404.1321.

§ 404.1321 Ninety-day active service requirement for post-World War II veterans.

(a) The 90 days of active service required for post-World War II veterans do not have to be consecutive if the 90 days were in the post-World War II period. The 90-day requirement cannot be met by totaling the periods of active duty for training purposes before 1957 which were less than 90 days.

(b) If, however, all of the 90 days of active service required for post-World War II veterans were not in the post-World War II period, the 90 days must (only in those circumstances) be consecutive if the 90 days began before July 25, 1947, and ended on or after that date, or began before January 1, 1957, and ended on or after that date.

(c) The 90 days of active service is not required if the post-World War II veteran died in service or was separated from service under conditions other than dishonorable because of a disability or injury which began or worsened while performing service duties.

§ 404.1322 Post-World War II service included.

Your service was in the active service of the United States during the post-World War II period if you were in the—

(a) Air Force, Army, Navy, Marine Corps, Coast Guard, or any part of them;

(b) Commissioned corps of the United States Public Health Service and were on active service during that period;

(c) Commissioned corps of the United States Coast and Geodetic Survey and were on active service during that period; or

(d) Philippine Scouts and performed active service during the post-World War II period under the direct supervision of recognized military authority.

§ 404.1323 Post-World War II service excluded.

Your service was not in the active service of the United States during the post-World War II period if, for example, you were in the—

(a) Coast Guard Auxiliary;

(b) Coast Guard Reserve (Temporary) unless you served on active full-time service with military pay and allowances;

(c) Civil Air Patrol; or

(d) Civilian Auxiliary to the Military Police.

SEPARATION FROM ACTIVE SERVICE

§ 404.1325 Separation from active service under conditions other than dishonorable.

Separation from active service under conditions other than dishonorable means any discharge or release from the active service except—

(a) A discharge or release for desertion, absence without leave, or fraudulent entry;

(b) A dishonorable or bad conduct discharge issued by a general court martial of the Army, Navy, Air Force, Marine Corps, or Coast Guard of the United States, or by the active service of an allied country during the World War II period;

(c) A dishonorable discharge issued by the United States Public Health Service or the United States Coast and Geodetic Survey;

(d) A resignation by an officer for the good of the service;

(e) A discharge or release because the individual was a conscientious objector; or

(f) A discharge or release because the individual was convicted by a civil court for treason, sabotage, espionage, murder, rape, arson, burglary, robbery,

kidnapping, assault with intent to kill, assault with a deadly weapon, or because of an attempt to commit any of these crimes.

[45 FR 16464, Mar. 14, 1980; 45 FR 22023, Apr. 3, 1980]

MEMBERS OF THE UNIFORMED SERVICES

§ 404.1330 Who is a member of a uniformed service.

A member of a uniformed service is an individual who served on active duty after 1956. You are a member of a uniformed service if you—

(a) Are appointed, enlisted, or inducted into—

(1) The Air Force, Army, Navy, Coast Guard, or Marine Corps; or

(2) A reserve component of the uniformed services in paragraph (a)(1) of this section (except the Coast Guard Reserve as a temporary member);

(b) Served in the Army or Air Force under call or conscription;

(c) Are a commissioned officer of the National Oceanic and Atmospheric Administration or its predecessors, the Environmental Science Services Administration and the Coast and Geodetic Survey;

(d) Are a commissioned officer of the Regular or Reserve Corps of the Public Health Service;

(e) Are a retired member of any of the above services;

(f) Are a member of the Fleet Reserve or Fleet Marine Corps Reserve;

(g) Are a cadet at the United States Military Academy, Air Force Academy, or Coast Guard Academy, or a midshipman at the United States Naval Academy; or

(h) Are a member of the Reserve Officers Training Corps of the Army, Navy or Air Force, when ordered to annual training duty for at least 14 days and while performing official travel to and from that duty.

AMOUNTS OF WAGE CREDITS AND LIMITS ON THEIR USE

§ 404.1340 Wage credits for World War II and post-World War II veterans.

In determining your entitlement to, and the amount of, your monthly benefit or lump-sum death payment based on your active service during the World War II period or the post-World War II period, and for establishing a period of disability as discussed in §§ 404.132 and 404.133, we add the (deemed) amount of $160 for each month during a part of which you were in the active service as described in § 404.1312 or § 404.1322. For example, if you were in active service from October 11, 1942, through August 10, 1943, we add the (deemed) amount of $160 for October 1942 and August 1943 as well as November 1942 through July 1943. The amount of wage credits that are added in a calendar year cannot cause the total amount credited to your earnings record to exceed the annual earnings limitation explained in §§ 404.1047 and 404.1096(b).

§ 404.1341 Wage credits for a member of a uniformed service.

(a) *General.* In determining your entitlement to, and the amount of your monthly benefit (or lump sum death payment) based on your wages while on active duty as a member of the uniformed service from 1957 through 2001, and for establishing a period of disability as discussed in § 404.132, we add wage credits to the wages paid you as a member of that service. The amount of the wage credits, the applicable time periods, the wage credit amount limits, and the requirement of a minimum period of active duty service for granting these wage credits, are discussed in paragraphs (b), (c), and (d) of this section.

(b) *Amount of wage credits.* The amount of wage credits added is—

(1) $100 for each $300 in wages paid to you for your service in each calendar year from 1978 through 2001; and

(2) $300 for each calendar quarter in 1957 through 1977, regardless of the amount of wages actually paid you during that quarter for your service.

(c) *Limits on wage credits.* The amount of these wage credits cannot exceed—

(1) $1200 for any calendar year, or

(2) An amount which when added to other earnings causes the total earnings for the year to exceed the annual earnings limitation explained in §§ 404.1047 and 404.1096(b).

(d) *Minimum active-duty service requirement.* (1) If you enlisted for the first time in a regular component of

the Armed Forces on or after September 8, 1980, you must complete the shorter of 24 months of continuous active duty or the full period that you were called to active duty to receive these wage credits, unless:

(i) You are discharged or released from active duty for the convenience of the government in accordance with section 1171 of title 10 U.S.C. or because of hardship as specified in section 1173 of title 10 U.S.C.;

(ii) You are discharged or released from active duty for a disability incurred or aggravated in line of duty;

(iii) You are entitled to compensation for service-connected disability or death under chapter 11 of title 38 U.S.C.;

(iv) You die during your period of enlistment; or

(v) You were discharged prior to October 14, 1982, and your discharge was—

(A) Under chapter 61 of title 10 U.S.C.; or

(B) Because of a disability which resulted from an injury or disease incurred in or aggravated during your enlistment which was not the result of your intentional misconduct and did not occur during a period of unauthorized absence.

(2) If you entered on active duty as a member of the uniformed services as defined in § 404.1330 *on or after* October 14, 1982, having neither previously completed a period of 24 months' active duty nor been discharged or released from this period of active duty under section 1171, title 10 U.S.C. (*i.e.*, convenience of the government), you must complete the shorter of 24 months of continuous active duty or the full period you were called or ordered to active duty to receive these wage credits, unless:

(i) You are discharged or released from active duty for the convenience of the government in accordance with section 1171 of title 10 U.S.C. or because of hardship as specified in section 1173 of title 10 U.S.C.;

(ii) You are discharged or released from active duty for a disability incurred or aggravated in line of duty;

(iii) You are entitled to compensation for service-connected disability or death under chapter 11 of title 38 U.S.C.; or

(iv) You die during your period of active service.

[45 FR 16464, Mar. 14, 1980, as amended at 52 FR 29663, Aug. 11, 1987; 70 FR 11865, Mar. 10, 2005]

§ 404.1342 Limits on granting World War II and post-World War II wage credits.

(a) You get wage credits for World War II or post-World War II active service only if the use of the wage credits results in entitlement to a monthly benefit, a higher monthly benefit, or a lump-sum death payment.

(b) You may get wage credits for active service in July 1947 for either the World War II period or the post-World War II period but not for both. If your active service is before and on or after July 25, 1947, we add the $160 wage credit to the period which is most advantageous to you.

(c) You do not get wage credits for the World War II period if another Federal benefit (other than one payable by the Veterans Administration) is determined by a Federal agency or an instrumentality owned entirely by the United States to be payable to you, even though the Federal benefit is not actually paid or is paid and then terminated, based in part on your active service during the World War II period except as explained in § 404.1343.

(d) You do not get wage credits for the post-World War II period if another Federal benefit (other than one payable by the Veterans Administration) is determined by a Federal agency or an instrumentality owned entirely by the United States to be payable to you, even though the Federal benefit is not actually paid or is paid and then terminated, based in part on your active service during the post-World War II period except as explained in § 404.1343.

§ 404.1343 When the limits on granting World War II and post-World War II wage credits do not apply.

The limits on granting wage credits described in § 404.1342 (c) and (d) do not apply—

(a) If the wage credits are used solely to meet the insured status and quarters of coverage requirements for a period of disability as described in §§ 404.132 and 404.133;

(b) If you are the surviving spouse or child of a veteran of the World War II period or post-World War II period and you are entitled under the Civil Service Retirement Act of 1930 to a survivor's annuity based on the veteran's active service and—

(1) You give up your right to receive the survivor's annuity;

(2) A benefit under the Civil Service Retirement Act of 1930 based on the veteran's active service was not payable to the veteran; and

(3) Another Federal benefit is not payable to the veteran or his or her survivors except as described in paragraph (c) of this section; or

(c) For the years 1951 through 1956, if another Federal benefit is payable by the Army, Navy, Air Force, Marine Corps, Coast Guard, Coast and Geodetic Survey, or the Public Health Service based on post-World War II active service but only if the veteran was also paid wages as a member of a uniformed service after 1956.

[45 FR 16464, Mar. 14, 1980, as amended at 49 FR 24118, June 12, 1984]

DEEMED INSURED STATUS FOR WORLD II VETERANS

§ 404.1350 Deemed insured status.

(a) *When deemed insured status applies.* If you are the survivor of a World War II veteran, we consider the veteran to have died fully insured as discussed in § 404.111 and we include wage credits in determining your monthly benefit or lump-sum death payment if—

(1) The veteran was separated from active service of the United States before July 27, 1951; and

(2) The veteran died within 3 years after separation from active service and before July 27, 1954.

(b) *Amount of credit given for deemed insured World War II veterans.* (1) When we compute a survivor's benefit or lump-sum death payment, we give credit for—

(i) $200 (for increment year purposes) for each calendar year in which the veteran had at least 30 days of active service beginning September 16, 1940, through 1950; and

(ii) An average monthly wage of $160.

(2) If the World War II veteran was fully or currently insured without the wage credits, we add increment years (years after 1936 and prior to 1951 in which the veteran had at least $200 in creditable earnings) to the increment years based on the veteran's wages.

§ 404.1351 When deemed insured status does not apply.

As a survivor of a World War II veteran, you cannot get a monthly benefit or lump-sum death payment based on the veteran's deemed insured status as explained in § 404.1350 if—

(a) Your monthly benefit or lump-sum death payment is larger without using the wage credits;

(b) The Veterans Administration has determined that a pension or compensation is payable to you based on the veteran's death;

(c) The veteran died while in the active service of the United States;

(d) The veteran was first separated from active service after July 26, 1951;

(e) The veteran died after July 26, 1954; or

(f) The veteran's only service during the World War II period was by enlistment in the Philippine Scouts as authorized by the Armed Forces Voluntary Recruitment Act of 1945 (Pub. L. 190 of the 79th Congress).

§ 404.1352 Benefits and payments based on deemed insured status.

(a) *Our determination.* We determine your monthly benefit or lump-sum death payment under the deemed insured status provisions in §§ 404.1350 and 404.1351 regardless of whether the Veterans Administration has determined that any pension or compensation is payable to you.

(b) *Certification for payment.* If we determine that you can be paid a monthly benefit or lump-sum death payment, we certify these benefits for payment. However, the amount of your monthly benefit or lump-sum death payment may be changed if we are informed by the Veterans Administration that a pension or compensation is payable because of the veteran's death as explained in § 404.1360.

(c) *Payments not considered as pension or compensation.* We do not consider as pension or compensation—

(1) National Service Life Insurance payments;

(2) United States Government Life Insurance payments; or

(3) Burial allowance payments made by the Veterans Administration.

EFFECT OF OTHER BENEFITS ON PAYMENT OF SOCIAL SECURITY BENEFITS AND PAYMENTS

§ 404.1360 Veterans Administration pension or compensation payable.

(a) *Before we determine and certify payment.* If we are informed by the Veterans Administration that a pension or compensation is payable to you before we determine and certify payment of benefits based on deemed insured status, we compute your monthly benefit or lump-sum death payment based on the death of the World War II veteran without using the wage credits discussed in § 404.1350.

(b) *After we determine and certify payment.* If we are informed by the Veterans Administration that a pension or compensation is payable to you after we determine and certify payment of benefits based on deemed insured status, we—

(1) Stop payment of your benefits or recompute the amount of any further benefits that can be paid to you; and

(2) Determine whether you were erroneously paid and the amount of any erroneous payment.

§ 404.1361 Federal benefit payable other than by Veterans Administration.

(a) *Before we determine and certify payment.* If we are informed by another Federal agency or instrumentality of the United States (other than the Veterans Administration) that a Federal benefit is payable to you by that agency or instrumentality based on the veteran's World War II or post-World War II active service before we determine and certify your monthly benefit or lump-sum death payment, we compute your monthly benefit or lump-sum death payment without using the wage credits discussed in § 404.1340.

(b) *After we determine and certify payment.* If we are informed by another Federal agency or instrumentality of the United States (other than the Veterans Administration) that a Federal benefit is payable to you by that agency or instrumentality based on the veteran's World War II or post-World War II active service after we determine and certify payment, we—

(1) Stop payment of your benefits or recompute the amount of any further benefits that can be paid to you; and

(2) Determine whether you were erroneously paid and the amount of any erroneous payment.

§ 404.1362 Treatment of social security benefits or payments where Veterans Administration pension or compensation payable.

(a) *Before we receive notice from the Veterans Administration.* If we certify your monthly benefit or a lump-sum death payment as determined under the deemed insured status provisions in § 404.1350 before we receive notice from the Veterans Administration that a pension or compensation is payable to you, our payments to you are erroneous only to the extent that they exceed the amount of the accrued pension of compensation payable.

(b) *After we receive notice from the Veterans Administration.* If we certify your monthly benefit or lump-sum death payment as determined under the deemed insured status provisions in § 404.1350 after we receive notice from the Veterans Administration that a pension or compensation is payable to you, our payments to you are erroneous whether or not they exceed the amount of the accrued pension or compensation payable.

§ 404.1363 Treatment of social security benefits or payments where Federal benefit payable other than by Veterans Administration.

If we certify your monthly benefit or lump-sum death payment based on World War II or post-World War II wage credits after we receive notice from another Federal agency or instrumentality of the United States (other than the Veterans Administration) that a Federal benefit is payable to you by that agency or instrumentality based on the veteran's World War II or post-World War II active service, our payments to you are erroneous to the extent the payments are based on the World War II or post-World War II wage credits. The payments are erroneous beginning with the first month you are eligible for the Federal benefit.

EVIDENCE OF ACTIVE SERVICE AND MEMBERSHIP IN A UNIFORMED SERVICE

§404.1370 Evidence of active service and separation from active service.

(a) *General.* When you file an application for a monthly benefit or lump-sum death payment based on the active service of a World War II or post-World War II veteran, you must submit evidence of—

(1) Your entitlement as required by subpart H of this part or other evidence that may be expressly required;

(2) The veteran's period in active service of the United States; and

(3) The veteran's type of separation from active service of the United States.

(b) *Evidence we accept.* We accept as proof of a veteran's active service and separation from active service—

(1) An original certificate of discharge, or an original certificate of service, from the appropriate military service, from the United States Public Health Service, or from the United States Coast and Geodetic Survey;

(2) A certified copy of the original certificate of discharge or service made by the State, county, city agency or department in which the original certificate is recorded;

(3) A certification from the appropriate military service, United States Public Health Service, or United States Coast and Geodetic Survey showing the veteran's period of active service and type of separation;

(4) A certification from a local selective service board showing the veteran's period of active service and type of separation; or

(5) Other evidence that proves the veteran's period of active service and type of separation.

§404.1371 Evidence of membership in a uniformed service during the years 1957 through 1967.

(a) *General.* When you file an application for a monthly benefit or lump-sum death payment based on the services of a member of a uniformed service during the years 1957 through 1967, you should submit evidence identifying the member's uniformed service and showing the period(s) he or she was on active duty during those years.

(b) *Evidence we accept.* The evidence we will accept includes any official correspondence showing the member's status as an active service member during the appropriate period, a certification of service by the uniformed service, official earnings statements, copies of the member's Form W-2, and military orders, for the appropriate period.

Subpart O—Interrelationship of Old-Age, Survivors and Disability Insurance Program With the Railroad Retirement Program

AUTHORITY: Secs. 202(l), 205(a), (c)(5)(D), (i), and (o), 210 (a)(9) and (l)(4), 211(c)(3), and 702(a)(5) of the Social Security Act (42 U.S.C. 402(l), 405(a), (c)(5)(D), (i), and (o), 410 (a)(9) and (l)(4), 411(c)(3), and 902(a)(5)).

CROSS REFERENCE: For regulations under the Railroad Retirement Act, see chapter II of this title.

§404.1401 What is the interrelationship between the Railroad Retirement Act and the Old-Age, Survivors and Disability Insurance Program of the Social Security Act?

(a) *Background.* The Railroad Retirement Act provides a system of benefits for railroad employees, their dependents and survivors, and is integrated with the Social Security Act to provide a coordinated system of retirement, survivor, dependent and disability benefits payable on the basis of an individual's work in the railroad industry and in employment and self-employment covered by the Social Security Act. With respect to the coordination between the two programs, the Railroad Retirement Act distinguishes between ''career'' or ''vested'' railroad workers and those individuals who may be considered ''casual'' or ''non-vested'' railroad workers based on the total amount of railroad service credited to the worker, as explained in paragraph (b) of this section. The Railroad Retirement Board transfers to the Social Security Administration (SSA) the compensation records of workers who at the time of retirement, onset of disability or death, are non-vested and meet certain other requirements. Any compensation paid to non-vested workers for service after 1936 becomes wages

under the Social Security Act (to the extent they do not exceed the annual wage limitations described in § 404.1047). Any benefits payable to non-vested workers, their dependents, and their survivors, are computed on the basis of the combined compensation and social security covered earnings creditable to the workers' records. Once a railroad worker meets the vesting requirements, the record of the worker's railroad service and compensation generally may not be used for benefit purposes under the Social Security Act, but under certain circumstances may be transferred after the worker's death to SSA for use in determining social security benefit entitlement for the railroad worker's survivors (*see* § 404.1407). Under certain circumstances (*see* § 404.1413), certification of benefits payable under the provisions of the Social Security Act will be made to the Railroad Retirement Board. The Railroad Retirement Board will certify such benefits to the Secretary of the Treasury.

(b) *Who is a vested railroad worker?* You are a vested railroad worker if you have:

(1) Ten years or more of service in the railroad industry, or

(2) Effective January 1, 2002, you have at least 5 years of service in the railroad industry, all of which accrue after December 31, 1995.

(c) *Definition of years of service.* As used in paragraph (b) of this section, the term *years of service* has the same meaning as assigned to it by section 1(f) of the Railroad Retirement Act of 1974, as amended, (45 U.S.C. 231(f)).

[69 FR 5692, Feb. 6, 2004]

§ 404.1402 When are railroad industry services by a non-vested worker covered under Social Security?

If you are a non-vested worker, we (the Social Security Administration) will consider your services in the railroad industry to be ''employment'' as defined in section 210 of the Social Security Act for the following purposes:

(a) To determine entitlement to, or the amount of, any monthly benefits or lump-sum death payment on the basis of your wages and self-employment income;

(b) To determine entitlement to, or the amount of, any survivor monthly benefit or any lump-sum death payment on the basis of your wages and self-employment income provided you did not have a ''current connection'' with the railroad industry, as defined in section 1(o) of the Railroad Retirement Act of 1974, as amended, (45 U.S.C. 231(o)), at the time of your death; (in such cases, survivor benefits are not payable under the Railroad Retirement Act);

(c) To determine entitlement to a period of disability (*see* subpart B of this part) on the basis of your wages and self-employment income; or

(d) To apply the provisions of section 203 of the Social Security Act concerning deductions from benefits under the annual earnings test (*see* subpart E of this part).

[69 FR 5693, Feb. 6, 2004]

§ 404.1404 Effective date of coverage of railroad services under the act.

Coverage under the act of services performed after 1936 by an individual in the railroad industry is effective as follows:

(a) The provisions of paragraphs (a) and (b) of § 404.1402 insofar as they relate to survivor monthly benefits are effective for months after December 1946 and insofar as they relate to lump-sum death payments are effective with respect to deaths after 1946;

(b) The provisions of paragraph (a) of § 404.1402 insofar as they relate to old-age insurance benefits or monthly benefits of dependents of old-age insurance beneficiaries are effective November 1, 1951; insofar as they relate to disability insurance benefits are effective for months after June 1957; and insofar as they relate to monthly benefits for dependents of disability insurance beneficiaries are effective for months after August 1958;

(c) The provisions of paragraph (c) of § 404.1402 are effective for benefits for months after June 1955; and

(d) The provisions of paragraph (d) of § 404.1402 are effective November 1, 1951.

[25 FR 5182, June 10, 1960]

§ 404.1405 If you have been considered a non-vested worker, what are the situations when your railroad industry work will not be covered under Social Security?

(a) *Awards by the Railroad Retirement Board prior to October 30, 1951.* The provisions of § 404.1402(a) shall not apply with respect to the wages and self-employment income of an individual if, prior to October 30, 1951, the Railroad Retirement Board has awarded under the Railroad Retirement Act a retirement annuity to such individual or a survivor annuity with respect to the death of such individual and such retirement or survivor annuity, as the case may be, was payable at the time an application for benefits is filed under the Social Security Act on the basis of the wages and self-employment income of such individual. A pension payable under section 6 of the Railroad Retirement Act of 1937 as in effect prior to the Railroad Retirement Act of 1974, or an annuity paid in a lump sum equal to its commuted value under section 3(i) of the Railroad Retirement Act in effect prior to the Social Security Act of October 30, 1951, is not a ''retirement or survivor annuity'' for the purpose of this paragraph.

(b) *You continue to work in the railroad industry after establishing entitlement to old-age insurance benefits under section 202(a) of the Social Security Act.* If your service in the railroad industry is used to establish your entitlement to, or to determine the amount of, your old-age insurance benefits under section 202(a) of the Social Security Act, but you become vested after the effective date of your benefits, your railroad service will no longer be deemed to be in ''employment'' as defined in section 210 of the Act. Your benefits and any benefits payable to your spouse or child under section 202(b), (c), or (d) of the Act will be terminated with the month preceding the month in which you become a vested worker. However, if you remain insured (*see* subpart B of this part) without the use of your railroad compensation, your benefits will instead be recalculated without using your railroad compensation. The recalculated benefits will be payable beginning with the month in which you become a vested worker. Any monthly benefits paid prior to the month you become a vested worker are deemed to be correct payments.

[18 FR 8694, Dec. 24, 1953, as amended at 25 FR 5182, June 10, 1960; 42 FR 18273, Apr. 6, 1977; 69 FR 5693, Feb. 6, 2004]

§ 404.1406 Eligibility to railroad retirement benefits as a bar to payment of social security benefits.

Notwithstanding the fact that, pursuant to the preceding provisions of this subpart, services rendered by an individual in the railroad industry are in employment, no lump-sum death payment or survivor monthly benefits shall be paid (except as provided in § 404.1407) under the regulations in this part on the basis of such individual's wages and self-employment income if any person, upon filing application therefor, would be entitled to an annuity under section 2 of the Railroad Retirement Act of 1974 or a lump-sum payment under section 6(b) of such Act with respect to the death of that individual; or for periods prior to 1975, would have been entitled to an annuity under section 5 or a lump-sum payment under section 5(f)(1) of the Railroad Retirement Act of 1937 with respect to the death of that individual.

[42 FR 18273, Apr. 6, 1977]

§ 404.1407 When railroad retirement benefits do not bar payment of social security benefits.

The provisions of § 404.1406 shall not operate if:

(a) The survivor is, or upon filing application would be, entitled to a monthly benefit with respect to the death of an insured individual for a month prior to January 1947, if such monthly benefit is greater in amount than the survivor annuity payable to such survivor after 1946 under the Railroad Retirement Act; or

(b) The residual lump-sum payment provided by section 6(c) of the Railroad Retirement Act of 1974 (or section 5(f)(2) of the Railroad Retirement Act of 1937 prior to the 1974 Act) with respect to the death of an insured individual is paid by the Railroad Retirement Board pursuant to an irrevocable election filed with the Board by the widow, widower, or parent of such individual to waive all future annuities or

benefits based on the combined record of earnings and compensation to which such widow, widower or parent might become entitled, but only to the extent that widow's, widower's or parent's benefits may be payable under the regulations of this part to such widow, widower or parent, as the case may be, solely on the basis of the wages and self-employment income of such deceased individual and without regard to any compensation which may be treated as wages pursuant to § 404.1408.

[42 FR 18273, Apr. 6, 1977]

§ 404.1408 Compensation to be treated as wages.

(a) *General.* Where pursuant to the preceding provisions of this subpart, services rendered by an individual in the railroad industry are considered to be employment as defined in section 210 of the Social Security Act (see § 404.1027 of this part). Thus, any compensation (as defined in section 1(h) of the Railroad Retirement Act of 1974 or prior to the 1974 Act, section 1(h) of the Railroad Retirement Act of 1937) received by such individual for such services shall constitute wages, provided that the provisions of § 404.1406 do not operate to bar the payments of benefits under title II of the Social Security Act.

(b) *Military service exception.* An exception to paragraph (a) of this section applies to any compensation attributable as having been paid during any month on account of military service creditable under section 1 of the Railroad Retirement Act of 1974 (or section 4 of the Railroad Retirement Act of 1937 prior to the 1974 Act). Such compensation shall not constitute wages for purposes of title II of the Social Security Act if, based on such services, wages are deemed to have been paid to such individual during such month under the provisions described in §§ 404.1350 through 404.1352 of this part.

[65 FR 16813, Mar. 30, 2000]

§ 404.1409 Purposes of using compensation.

Compensation which is treated as wages under § 404.1408 shall be used, together with wages (see subpart K of this part) and self-employment income (see subpart K of this part), for purposes of:

(a) Determining an individual's insured status for monthly benefits or the lump-sum death payment (see subpart B of this part);

(b) Computing such individual's primary insurance amount (see subpart C of this part);

(c) Determining an individual's entitlement to the establishment of a period of disability (see subpart B of this part for disability insured status requirements); and

(d) Applying the deduction provisions of section 203 of the act (see subpart E of this part).

[25 FR 5183, June 10, 1960]

§ 404.1410 Presumption on basis of certified compensation record.

(a) *Years prior to 1975.* Where the Railroad Retirement Board certifies to SSA a report of record of compensation, such compensation is treated as wages under § 404.1408. For periods of service which do not identify the months or quarters in which such compensation was paid, the sum of the compensation quarters of coverage (see § 404.1412) will be presumed, in the absence of evidence to the contrary, to represent an equivalent number of quarters of coverage (see § 404.101). No more than four quarters of coverage shall be credited to an individual in a single calendar year.

(b) *Years after 1974.* Compensation paid in a calendar year will, in the absence of evidence to the contrary, be presumed to have been paid in equal proportions with respect to all months in the year in which the employee will have been in railroad service. (For years prior to 1975, see § 404.1412.)

(c) *Allocation of compensation to months of service.* If by means of the presumptions in this section an individual does not have an insured status (see subpart B of this part) on the basis of quarters of coverage with which he is credited, or a deceased individual's primary insurance amount (see § 404.201) may be affected because he attained age 22 after 1936, the Administration may request the Railroad Retirement Board to furnish a report of the months in which such individual rendered service for compensation which is treated as wages under

§ 404.1408 if it appears the identification of such months may result in an insured status or if it will affect such primary insurance amount.

(d) *Effect of self-employment income and maximum earnings.* However, if such individual also had self-employment income for a taxable year and the sum of such income and wages (including compensation which is treated as wages under § 404.1408) paid to or received by him during such taxable year equals the following amounts, each calendar quarter any part of which falls in such taxable year, shall be a quarter of coverage:

(1) After 1950 and prior to 1955, equals $3,600 of remuneration;

(2) After 1954 and prior to 1959, equals $4,200 of remuneration;

(3) After 1958 and prior to 1966, equals $4,800 of remuneration;

(4) After 1965 and prior to 1968, equals $6,600 of remuneration;

(5) After 1967 and beginning prior to 1972, equals $7,800 of remuneration (including a fiscal year which began in 1971 and ended in 1972);

(6) Beginning after 1971 and prior to 1973, equals $9,000 of remuneration;

(7) Beginning after 1972 and prior to 1974, equals $10,800 of remuneration;

(8) Beginning after 1973 and prior to 1975, equals $13,200 of remuneration;

(9) Beginning after 1974 and prior to 1976, equals $14,100 of remuneration;

(10) Beginning after 1975 and prior to 1977, equals $15,300 of remuneration; or

(11) Beginning after 1976, and amount equal to the contribution and benefit base as determined under section 230 of the Social Security Act which is effective for such calendar year.

This subsection is an exception to the rule in paragraph (a) of this section concerning a presumption applicable to conversion of railroad compensation into quarters of coverage for years prior to 1975.

[42 FR 18273, Apr. 6, 1977, as amended at 65 FR 16814, Mar. 30, 2000]

§ 404.1412 Compensation quarters of coverage.

As used in this subpart, a compensation quarter of coverage is any quarter of coverage computed with respect to compensation paid to an individual for railroad employment after 1936 and prior to 1975 in accordance with the provisions for determining such quarters of coverage as contained in section 5(l)(4) of the Railroad Retirement Act of 1937. (For years beginning 1975, see § 404.1410(b)).

[42 FR 18274, Apr. 6, 1977]

§ 404.1413 When will we certify payment to the Railroad Retirement Board (RRB)?

(a) *When we will certify payment to RRB.* If we find that you are entitled to any payment under title II of the Social Security Act, we will certify payment to the Railroad Retirement Board if you meet any of the following requirements:

(1) You are a vested worker; or

(2) You are the wife or husband of a vested worker; or

(3) You are the survivor of a vested worker and you are entitled, or could upon application be entitled to, an annuity under section 2 of the Railroad Retirement Act of 1974, as amended, (45 U.S.C. 231(a)); or

(4) You are entitled to benefits under section 202 of the Social Security Act on the basis of the wages and self-employment income of a vested worker (unless you are the survivor of a vested worker who did not have a current connection, as defined in section 1(o) of the Railroad Retirement Act of 1974, as amended, (45 U.S.C. 231(o)) with the railroad industry at the time of his or her death).

(b) *What information does certification include?* The certification we make to the Railroad Retirement Board for individuals entitled to any payment(s) under title II will include your name, address, payment amount(s), and the date the payment(s) should begin.

(c) *Applicability limitations.* The applicability limitations in paragraphs (a)(1) through (4) of this section affect claimants who first become entitled to benefits under title II of the Social Security Act after 1974. (*See* also § 404.1810.)

[69 FR 5693, Feb. 6, 2004]

Subpart P—Determining Disability and Blindness

AUTHORITY: Secs. 202, 205(a)–(b) and (d)–(h), 216(i), 221(a), (i), and (j), 222(c), 223, 225, and 702(a)(5) of the Social Security Act (42 U.S.C. 402, 405(a)–(b) and (d)–(h), 416(i), 421(a), (i), and (j), 422(c), 423, 425, and 902(a)(5)); sec. 211(b), Pub. L. 104–193, 110 Stat. 2105, 2189; sec. 202, Pub. L. 108–203, 118 Stat. 509 (42 U.S.C. 902 note).

SOURCE: 45 FR 55584, Aug. 20, 1980, unless otherwise noted.

GENERAL

§ 404.1501 Scope of subpart.

In order for you to become entitled to any benefits based upon disability or blindness or to have a period of disability established, you must be disabled or blind as defined in title II of the Social Security Act. This subpart explains how we determine whether you are disabled or blind. We discuss a *period of disability* in subpart D of this part. We have organized the rules in the following way.

(a) We define general terms, then discuss who makes our disability determinations and state that disability determinations made under other programs are not binding on our determinations.

(b) We explain the term *disability* and note some of the major factors that are considered in determining whether you are disabled in §§ 404.1505 through 404.1510.

(c) Sections 404.1512 through 404.1518 contain our rules on evidence. We explain your responsibilities for submitting evidence of your impairment, state what we consider to be acceptable sources of medical evidence, and describe what information should be included in medical reports.

(d) Our general rules on evaluating disability if you are filing a new application are stated in §§ 404.1520 through 404.1523. We describe the steps that we go through and the order in which they are considered.

(e) Our rules on medical considerations are found in §§ 404.1525 through 404.1530. We explain in these rules—

(1) The purpose of the Listing of Impairments found in appendix 1 of this subpart and how to use it;

(2) What we mean by the term *medical equivalence* and how we determine medical equivalence;

(3) The effect of a conclusion by your physician that you are disabled;

(4) What we mean by symptoms, signs, and laboratory findings;

(5) How we evaluate pain and other symptoms; and

(6) The effect on your benefits if you fail to follow treatment that is expected to restore your ability to work, and how we apply the rule.

(f) In §§ 404.1545 through 404.1546 we explain what we mean by the term *residual functional capacity*, state when an assessment of residual functional capacity is required, and who may make it.

(g) Our rules on vocational considerations are in §§ 404.1560 through 404.1569a. We explain in these rules—

(1) When we must consider vocational factors along with the medical evidence;

(2) How we use our residual functional capacity assessment to determine if you can still do your past relevant work or other work;

(3) How we consider the vocational factors of age, education, and work experience;

(4) What we mean by ''work which exists in the national economy'';

(5) How we consider the exertional, nonexertional, and skill requirements of work, and when we will consider the limitations or restrictions that result from your impairment(s) and related symptoms to be exertional, nonexertional, or a combination of both; and

(6) How we use the Medical-Vocational Guidelines in appendix 2 of this subpart.

(h) Our rules on substantial gainful activity are found in §§ 404.1571 through 404.1574. These explain what we mean by substantial gainful activity and how we evaluate your work activity.

(i) In §§ 404.1577, 404.1578, and 404.1579, we explain the special rules covering disability for widows, widowers, and surviving divorced spouses for monthly benefits payable for months prior to January 1991, and in §§ 404.1581 through 404.1587 we discuss disability due to blindness.

(j) Our rules on when disability continues and stops are contained in § 404.1579 and §§ 404.1588 through 404.1598. We explain what your responsibilities are in telling us of any events that may cause a change in your disability status, when you may have a trial work period, and when we will review to see if you are still disabled. We also explain how we consider the issue of medical improvement (and the exceptions to medical improvement) in deciding whether you are still disabled.

[45 FR 55584, Aug. 20, 1980, as amended at 50 FR 50126, Dec. 6, 1985; 56 FR 57941, Nov. 14, 1991; 57 FR 30120, July 8, 1992; 68 FR 51161, Aug. 26, 2003]

§ 404.1502 General definitions and terms for this subpart.

As used in the subpart—

Acceptable medical source refers to one of the sources described in § 404.1513(a) who provides evidence about your impairments. It includes treating sources, nontreating sources, and nonexamining sources.

Commissioner means the Commissioner of Social Security or his or her authorized designee.

Medical sources refers to acceptable medical sources, or other health care providers who are not acceptable medical sources.

Nonexamining source means a physician, psychologist, or other acceptable medical source who has not examined you but provides a medical or other opinion in your case. At the administrative law judge hearing and Appeals Council levels of the administrative review process, it includes State agency medical and psychological consultants, other program physicians and psychologists, and medical experts or psychological experts we consult. *See* § 404.1527.

Nontreating source means a physician, psychologist, or other acceptable medical source who has examined you but does not have, or did not have, an ongoing treatment relationship with you. The term includes an acceptable medical source who is a consultative examiner for us, when the consultative examiner is not your treating source. See § 404.1527.

State agency means that agency of a State which has been designated by the State to carry out the disability or blindness determination function.

Treating source means your own physician, psychologist, or other acceptable medical source who provides you, or has provided you, with medical treatment or evaluation and who has, or has had, an ongoing treatment relationship with you. Generally, we will consider that you have an ongoing treatment relationship with an acceptable medical source when the medical evidence establishes that you see, or have seen, the source with a frequency consistent with accepted medical practice for the type of treatment and/or evaluation required for your medical condition(s). We may consider an acceptable medical source who has treated or evaluated you only a few times or only after long intervals (e.g., twice a year) to be your treating source if the nature and frequency of the treatment or evaluation is typical for your condition(s). We will not consider an acceptable medical source to be your treating source if your relationship with the source is not based on your medical need for treatment or evaluation, but solely on your need to obtain a report in support of your claim for disability. In such a case, we will consider the acceptable medical source to be a nontreating source.

We or *us* refers to either the Social Security Administration or the State agency making the disability or blindness determination.

You or *your* means, as appropriate, the person who applies for benefits or for a period of disability, the person for whom an application is filed, or the person who is receiving benefits based on disability or blindness.

[56 FR 36954, Aug. 1, 1991, as amended at 62 FR 38451, July 18, 1997; 65 FR 11875, Mar. 7, 2000; 71 FR 16443, Mar. 31, 2006; 76 FR 24806, May 3, 2011]

DETERMINATIONS

§ 404.1503 Who makes disability and blindness determinations.

(a) *State agencies.* State agencies make disability and blindness determinations for the Commissioner for most persons living in the State. State agencies make these disability and

blindness determinations under regulations containing performance standards and other administrative requirements relating to the disability and blindness determination function. States have the option of turning the function over to the Federal Government if they no longer want to make disability determinations. Also, the Commissioner may take the function away from any State which has substantially failed to make disability and blindness determinations in accordance with these regulations. Subpart Q of this part contains the rules the States must follow in making disability and blindness determinations.

(b) *Social Security Administration.* The Social Security Administration will make disability and blindness determinations for—

(1) Any person living in a State which is not making for the Commissioner any disability and blindness determinations or which is not making those determinations for the class of claimants to which that person belongs; and

(2) Any person living outside the United States.

(c) *What determinations are authorized.* The Commissioner has authorized the State agencies and the Social Security Administration to make determinations about—

(1) Whether you are disabled or blind;

(2) The date your disability or blindness began; and

(3) The date your disability or blindness stopped.

(d) *Review of State Agency determinations.* On review of a State agency determination or redetermination of disability or blindness we may find that—

(1) You are, or are not, disabled or blind, regardless of what the State agency found;

(2) Your disability or blindness began earlier or later than the date found by the State agency; and

(3) Your disability or blindness stopped earlier or later than the date found by the State agency.

(e) *Initial determinations for mental impairments.* An initial determination by a State agency or the Social Security Administration that you are not disabled (or a Social Security Administration review of a State agency's initial determination), in any case where there is evidence which indicates the existence of a mental impairment, will be made only after every reasonable effort has been made to ensure that a qualified psychiatrist or psychologist has completed the medical portion of the case review and any applicable residual functional capacity assessment. If the services of qualified psychiatrists or psychologists cannot be obtained because of impediments at the State level, the Commissioner may contract directly for the services. In a case where there is evidence of mental and nonmental impairments and a qualified psychologist serves as a psychological consultant, the psychologist will evaluate only the mental impairment, and a physician will evaluate the nonmental impairment.

[46 FR 29204, May 29, 1981, as amended at 52 FR 33926, Sept. 9, 1987; 62 FR 38451, July 18, 1997; 65 FR 34957, June 1, 2000; 71 FR 16443, Mar. 31, 2006; 72 FR 51177, Sept. 6, 2007]

§ 404.1503a Program integrity.

We will not use in our program any individual or entity, except to provide existing medical evidence, who is currently excluded, suspended, or otherwise barred from participation in the Medicare or Medicaid programs, or any other Federal or Federally-assisted program; whose license to provide health care services is currently revoked or suspended by any State licensing authority pursuant to adequate due process procedures for reasons bearing on professional competence, professional conduct, or financial integrity; or who, until a final determination is made, has surrendered such a license while formal disciplinary proceedings involving professional conduct are pending. By individual or entity we mean a medical or psychological consultant, consultative examination provider, or diagnostic test facility. Also see §§ 404.1519 and 404.1519g(b).

[56 FR 36954, Aug. 1, 1991]

§ 404.1504 Determinations by other organizations and agencies.

A decision by any nongovernmental agency or any other governmental agency about whether you are disabled or blind is based on its rules and is not

our decision about whether you are disabled or blind. We must make a disability or blindness determination based on social security law. Therefore, a determination made by another agency that you are disabled or blind is not binding on us.

DEFINITION OF DISABILITY

§ 404.1505 Basic definition of disability.

(a) The law defines disability as the inability to do any substantial gainful activity by reason of any medically determinable physical or mental impairment which can be expected to result in death or which has lasted or can be expected to last for a continuous period of not less than 12 months. To meet this definition, you must have a severe impairment(s) that makes you unable to do your past relevant work (*see* § 404.1560(b)) or any other substantial gainful work that exists in the national economy. If your severe impairment(s) does not meet or medically equal a listing in appendix 1, we will assess your residual functional capacity as provided in §§ 404.1520(e) and 404.1545. (*See* §§ 404.1520(g)(2) and 404.1562 for an exception to this rule.) We will use this residual functional capacity assessment to determine if you can do your past relevant work. If we find that you cannot do your past relevant work, we will use the same residual functional capacity assessment and your vocational factors of age, education, and work experience to determine if you can do other work. (*See* § 404.1520(h) for an exception to this rule.) We will use this definition of disability if you are applying for a period of disability, or disability insurance benefits as a disabled worker, or child's insurance benefits based on disability before age 22 or, with respect to disability benefits payable for months after December 1990, as a widow, widower, or surviving divorced spouse.

(b) There are different rules for determining disability for individuals who are statutorily blind. We discuss these in §§ 404.1581 through 404.1587. There are also different rules for determining disability for widows, widowers, and surviving divorced spouses for monthly benefits for months prior to January 1991. We discuss these rules in §§ 404.1577, 404.1578, and 404.1579.

[45 FR 55584, Aug. 20, 1980, as amended at 51 FR 10616, Mar. 28, 1986; 57 FR 30120, July 8, 1992; 68 FR 51161, Aug. 26, 2003; 77 FR 43494, July 25, 2012]

§ 404.1506 When we will not consider your impairment.

(a) *Permanent exclusion of felony-related impairment.* In determining whether you are under a disability, we will not consider any physical or mental impairment, or any increase in severity (aggravation) of a preexisting impairment, which arises in connection with your commission of a felony after October 19, 1980, if you are subsequently convicted of this crime. Your subsequent conviction will invalidate any prior determination establishing disability if that determination was based upon any impairment, or aggravation, which we must exclude under this rule.

(b) *Limited use of impairment arising in prison.* In determining whether you are under a disability for purposes of benefit payments, we will not consider any physical or mental impairment, or any increase in severity (aggravation) of a preexisting impairment, which arises in connection with your confinement in a jail, prison, or other penal institution or correctional facility for conviction of a felony committed after October 19, 1980. The exclusion of the impairment, or aggravation, applies in determining disability for benefits payable for any month during which you are confined. This rule does not preclude the establishment of a period of disability based upon the impairment or aggravation. You may become entitled to benefits upon release from prison provided that you apply and are under a disability at the time.

(c) *Felonious offenses.* We will consider an offense a felony if—

(1) It is a felony under applicable law; or

(2) In a jurisdiction which does not classify any crime as a felony, it is an offense punishable by death or imprisonment for a term exceeding one year.

(d) *Confinement.* In general, a jail, prison, or other penal institution or correctional facility is a facility which is under the control and jurisdiction of

the agency in charge of the penal system or in which convicted criminals can be incarcerated. Confinement in such a facility continues as long as you are under a sentence of confinement and have not been released due to parole or pardon. You are considered confined even though you are temporarily or intermittently outside of the facility (e.g., on work release, attending school, or hospitalized).

[48 FR 5714, Feb. 8, 1983]

§ 404.1508 What is needed to show an impairment.

If you are not doing substantial gainful activity, we always look first at your physical or mental impairment(s) to determine whether you are disabled or blind. Your impairment must result from anatomical, physiological, or psychological abnormalities which can be shown by medically acceptable clinical and laboratory diagnostic techniques. A physical or mental impairment must be established by medical evidence consisting of signs, symptoms, and laboratory findings, not only by your statement of symptoms (see § 404.1527). (See § 404.1528 for further information about what we mean by symptoms, signs, and laboratory findings.)

[45 FR 55584, Aug. 20, 1980, as amended at 56 FR 36954, Aug. 1, 1991]

§ 404.1509 How long the impairment must last.

Unless your impairment is expected to result in death, it must have lasted or must be expected to last for a continuous period of at least 12 months. We call this the duration requirement.

§ 404.1510 Meaning of substantial gainful activity.

Substantial gainful activity means work that—

(a) Involves doing significant and productive physical or mental duties; and

(b) Is done (or intended) for pay or profit.

(See § 404.1572 for further details about what we mean by substantial gainful activity.)

§ 404.1511 Definition of a disabling impairment.

(a) *Disabled workers, persons disabled since childhood and, for months after December 1990, disabled widows, widowers, and surviving divorced spouses.* If you are entitled to disability cash benefits as a disabled worker, or to child's insurance benefits, or, for monthly benefits payable after December 1990, to widow's, widower's, or surviving divorced spouse's monthly benefits, a disabling impairment is an impairment (or combination of impairments) which, of itself, is so severe that it meets or equals a set of criteria in the Listing of Impairments in appendix 1 of this subpart or which, when considered with your age, education, and work experience, would result in a finding that you are disabled under § 404.1594. In determining whether you have a disabling impairment, earnings are not considered.

(b) *Disabled widows, widowers, and surviving divorced spouses, for monthly benefits for months prior to January 1991.* If you have been entitled to disability benefits as a disabled widow, widower, or surviving divorced spouse and we must decide whether you had a disabling impairment for any time prior to January 1991, a disabling impairment is an impairment (or combination of impairments) which, of itself, was so severe that it met or equaled a set of criteria in the Listing of Impairments in appendix 1 of this subpart, or results in a finding that you were disabled under § 404.1579. In determining whether you had a disabling impairment, earnings are not considered.

[57 FR 30120, July 8, 1992]

EVIDENCE

§ 404.1512 Evidence.

(a) *General.* In general, you have to prove to us that you are blind or disabled. Therefore, you must bring to our attention everything that shows that you are blind or disabled. This means that you must furnish medical and other evidence that we can use to reach conclusions about your medical impairment(s) and, if material to the determination of whether you are disabled, its effect on your ability to work on a sustained basis. We will consider

only impairment(s) you say you have or about which we receive evidence.

(b) *What we mean by ''evidence.''* Evidence is anything you or anyone else submits to us or that we obtain that relates to your claim. This includes, but is not limited to:

(1) Objective medical evidence, that is, medical signs and laboratory findings as defined in §404.1528 (b) and (c);

(2) Other evidence from medical sources, such as medical history, opinions, and statements about treatment you have received;

(3) Statements you or others make about your impairment(s), your restrictions, your daily activities, your efforts to work, or any other relevant statements you make to medical sources during the course of examination or treatment, or to us during interviews, on applications, in letters, and in testimony in our administrative proceedings;

(4) Information from other sources, as described in §404.1513(d);

(5) Decisions by any governmental or nongovernmental agency about whether you are disabled or blind;

(6) At the initial level of the administrative review process, when a State agency disability examiner makes the initial determination alone (*see* §404.1615(c)(3)), opinions provided by State agency medical and psychological consultants based on their review of the evidence in your case record; See §404.1527(e)(2)–(3).

(7) At the reconsideration level of the administrative review process, when a State agency disability examiner makes the determination alone (*see* §404.1615(c)(3)), findings, other than the ultimate determination about whether you are disabled, made by State agency medical or psychological consultants and other program physicians, psychologists, or other medical specialists at the initial level of the administrative review process, and other opinions they provide based on their review of the evidence in your case record at the initial and reconsideration levels (*see* §404.1527(e)(1)(iii)); and

(8) At the administrative law judge and Appeals Council levels, findings, other than the ultimate determination about whether you are disabled, made by State agency medical or psychological consultants and other program physicians or psychologists, or other medical specialists, and opinions expressed by medical experts or psychological experts that we consult based on their review of the evidence in your case record. *See* §404.1527(e)(2) and (3).

(c) *Your responsibility*. You must provide medical evidence showing that you have an impairment(s) and how severe it is during the time you say that you are disabled. You must provide evidence, without redaction, showing how your impairment(s) affects your functioning during the time you say that you are disabled, and any other information that we need to decide your claim. If we ask you, you must provide evidence about:

(1) Your age;

(2) Your education and training;

(3) Your work experience;

(4) Your daily activities both before and after the date you say that you became disabled;

(5) Your efforts to work; and

(6) Any other factors showing how your impairment(s) affects your ability to work. In §§404.1560 through 404.1569, we discuss in more detail the evidence we need when we consider vocational factors.

(d) *Our responsibility*. Before we make a determination that you are not disabled, we will develop your complete medical history for at least the 12 months preceding the month in which you file your application unless there is a reason to believe that development of an earlier period is necessary or unless you say that your disability began less than 12 months before you filed your application. We will make every reasonable effort to help you get medical reports from your own medical sources when you give us permission to request the reports.

(1) ''Every reasonable effort'' means that we will make an initial request for evidence from your medical source and, at any time between 10 and 20 calendar days after the initial request, if the evidence has not been received, we will make one followup request to obtain the medical evidence necessary to make a determination. The medical

source will have a minimum of 10 calendar days from the date of our followup request to reply, unless our experience with that source indicates that a longer period is advisable in a particular case.

(2) By ''complete medical history,'' we mean the records of your medical source(s) covering at least the 12 months preceding the month in which you file your application. If you say that your disability began less than 12 months before you filed your application, we will develop your complete medical history beginning with the month you say your disability began unless we have reason to believe your disability began earlier. If applicable, we will develop your complete medical history for the 12-month period prior to (1) the month you were last insured for disability insurance benefits (see § 404.130), (2) the month ending the 7-year period you may have to establish your disability and you are applying for widow's or widower's benefits based on disability (see § 404.335(c)(1)), or (3) the month you attain age 22 and you are applying for child's benefits based on disability (see § 404.350(e)).

(e) *Obtaining a consultative examination.* We may ask you to attend one or more consultative examinations at our expense. See §§ 404.1517 through 404.1519t for the rules governing the consultative examination process. Generally, we will not request a consultative examination until we have made every reasonable effort to obtain evidence from your own medical sources. However, in some instances, such as when a source is known to be unable to provide certain tests or procedures or is known to be nonproductive or uncooperative, we may order a consultative examination while awaiting receipt of medical source evidence. We will not evaluate this evidence until we have made every reasonable effort to obtain evidence from your medical sources.

(f) *Other work.* In order to determine under § 404.1520(g) that you are able to make an adjustment to other work, we must provide evidence about the existence of work in the national economy that you can do (*see* §§ 404.1560 through 404.1569a), given your residual functional capacity (which we have already assessed, as described in § 404.1520(e)), age, education, and work experience.

[56 FR 36954, Aug. 1, 1991, as amended at 65 FR 11875, Mar. 7, 2000; 65 FR 34957, June 1, 2000; 68 FR 51161, Aug. 26, 2003; 71 FR 16444, Mar. 31, 2006; 75 FR 62680, Oct. 13, 2010; 76 FR 24806, May 3, 2011; 77 FR 10655, Feb. 23, 2012; 79 FR 33685, June 12, 2014]

EFFECTIVE DATE NOTE: At 80 FR 14836, Mar. 20, 2015, § 404.1512 was amended by revising paragraphs (a) through (c), effective Apr. 20, 2015. For the convenience of the user, the revised text is set forth as follows:

§ 404.1512 Evidence.

(a) *General.* In general, you have to prove to us that you are blind or disabled. You must inform us about or submit all evidence known to you that relates to whether or not you are blind or disabled. This duty is ongoing and requires you to disclose any additional related evidence about which you become aware. This duty applies at each level of the administrative review process, including the Appeals Council level if the evidence relates to the period on or before the date of the administrative law judge hearing decision. We will consider only impairment(s) you say you have or about which we receive evidence.

(b) *What we mean by ''evidence.''* Evidence is anything you or anyone else submits to us or that we obtain that relates to your claim.

(1) Evidence includes, but is not limited to:

(i) Objective medical evidence, that is, medical signs and laboratory findings as defined in § 404.1528(b) and (c);

(ii) Other evidence from medical sources, such as medical history, opinions, and statements about treatment you have received;

(iii) Statements you or others make about your impairment(s), your restrictions, your daily activities, your efforts to work, or any other statements you make to medical sources during the course of examination or treatment, or to us during interviews, on applications, in letters, and in testimony in our administrative proceedings;

(iv) Information from other sources, as described in § 404.1513(d);

(v) Decisions by any governmental or nongovernmental agency about whether or not you are disabled or blind (*see* § 404.1504);

(vi) At the initial level of the administrative review process, when a State agency disability examiner makes the initial determination alone (*see* § 404.1615(c)(3)), opinions provided by State agency medical and psychological consultants and other program physicians, psychologists, or other medical specialists based on their review of the evidence in your case record (*see* § 404.1527(e)(1)(ii));

(vii) At the reconsideration level of the administrative review process, when a State

agency disability examiner makes the determination alone (*see* § 404.1615(c)(3)), findings, other than the ultimate determination about whether or not you are disabled, made by the State agency medical or psychological consultants and other program physicians, psychologists, or other medical specialists at the initial level of the administrative review process, and other opinions they provide based on their review of the evidence in your case record at the initial and reconsideration levels (*see* § 404.1527(e)(1)(iii)); and

(viii) At the administrative law judge and Appeals Council levels, findings, other than the ultimate determination about whether or not you are disabled, made by State agency medical or psychological consultants and other program physicians or psychologists, or other medical specialists, and opinions expressed by medical experts or psychological experts that we consult based on their review of the evidence in your case record (*see* §§ 404.1527(e)(2)–(3)).

(2) *Exceptions.* Notwithstanding paragraph (b)(1) of this section, evidence does not include:

(i) Oral or written communications between you and your representative that are subject to the attorney-client privilege, unless you voluntarily disclose the communication to us; or

(ii) Your representative's analysis of your claim, unless he or she voluntarily discloses it to us. Your representative's ''analysis of your claim,'' means information that is subject to the attorney work product doctrine, but it does not include medical evidence, medical source opinions, or any other factual matter that we may consider in determining whether or not you are entitled to benefits (*see* paragraph (b)(2)(iv) of this section).

(iii) The provisions of paragraph (b)(2)(i) apply to communications between you and your non-attorney representative only if the communications would be subject to the attorney-client privilege, if your non-attorney representative were an attorney. The provisions of paragraph (b)(2)(ii) apply to the analysis of your claim by your non-attorney representative only if the analysis of your claim would be subject to the attorney work product doctrine, if your non-attorney representative were an attorney.

(iv) The attorney-client privilege generally protects confidential communications between an attorney and his or her client that are related to providing or obtaining legal advice. The attorney work product doctrine generally protects an attorney's analysis, theories, mental impressions, and notes. In the context of your disability claim, neither the attorney-client privilege nor the attorney work product doctrine allows you to withhold factual information, medical source opinions, or other medical evidence that we may consider in determining whether or not you are entitled to benefits. For example, if you tell your representative about the medical sources you have seen, your representative cannot refuse to disclose the identity of those medical sources to us based on the attorney-client privilege. As another example, if your representative asks a medical source to complete an opinion form related to your impairment(s), symptoms, or limitations, your representative cannot withhold the completed opinion form from us based on the attorney work product doctrine. The attorney work product doctrine would not protect the source's opinions on the completed form, regardless of whether or not your representative used the form in his or her analysis of your claim or made handwritten notes on the face of the report.

(c) *Your responsibility.* You must inform us about or submit all evidence known to you that relates to whether or not you are blind or disabled. When you submit evidence received from another source, you must submit that evidence in its entirety, unless you previously submitted the same evidence to us or we instruct you otherwise. If we ask you, you must inform us about:

(1) Your medical source(s);

(2) Your age;

(3) Your education and training;

(4) Your work experience;

(5) Your daily activities both before and after the date you say that you became disabled;

(6) Your efforts to work; and

(7) Any other factors showing how your impairment(s) affects your ability to work. In §§ 404.1560 through 404.1569a, we discuss in more detail the evidence we need when we consider vocational factors.

* * * * *

§ 404.1513 Medical and other evidence of your impairment(s).

(a) *Sources who can provide evidence to establish an impairment.* We need evidence from acceptable medical sources to establish whether you have a medically determinable impairment(s). See § 404.1508. Acceptable medical sources are—

(1) Licensed physicians (medical or osteopathic doctors);

(2) Licensed or certified psychologists. Included are school psychologists, or other licensed or certified individuals with other titles who perform the same function as a school psychologist in a school setting, for purposes of establishing intellectual disability, learning disabilities, and borderline intellectual functioning only;

(3) Licensed optometrists, for purposes of establishing visual disorders only (except, in the U.S. Virgin Islands, licensed optometrists, for the measurement of visual acuity and visual fields only);

(4) Licensed podiatrists, for purposes of establishing impairments of the foot, or foot and ankle only, depending on whether the State in which the podiatrist practices permits the practice of podiatry on the foot only, or the foot and ankle; and

(5) Qualified speech-language pathologists, for purposes of establishing speech or language impairments only. For this source, ''qualified'' means that the speech-language pathologist must be licensed by the State professional licensing agency, or be fully certified by the State education agency in the State in which he or she practices, or hold a Certificate of Clinical Competence from the American Speech-Language-Hearing Association.

(b) *Medical reports.* Medical reports should include—

(1) Medical history;

(2) Clinical findings (such as the results of physical or mental status examinations);

(3) Laboratory findings (such as blood pressure, x-rays);

(4) Diagnosis (statement of disease or injury based on its signs and symptoms);

(5) Treatment prescribed with response, and prognosis; and

(6) A statement about what you can still do despite your impairment(s) based on the acceptable medical source's findings on the factors under paragraphs (b)(1) through (b)(5) of this section (except in statutory blindness claims). Although we will request a medical source statement about what you can still do despite your impairment(s), the lack of the medical source statement will not make the report incomplete. See § 404.1527.

(c) *Statements about what you can still do.* At the administrative law judge and Appeals Council levels, we will consider residual functional capacity assessments made by State agency medical and psychological consultants, and other program physicians and psychologists to be ''statements about what you can still do'' made by non-examining physicians and psychologists based on their review of the evidence in the case record. Statements about what you can still do (based on the acceptable medical source's findings on the factors under paragraphs (b)(1) through (b)(5) of this section) should describe, but are not limited to, the kinds of physical and mental capabilities listed as follows (See §§ 404.1527 and 404.1545(c)):

(1) The acceptable medical source's opinion about your ability, despite your impairment(s), to do work-related activities such as sitting, standing, walking, lifting, carrying, handling objects, hearing, speaking, and traveling; and

(2) In cases of mental impairment(s), the acceptable medical source's opinion about your ability to understand, to carry out and remember instructions, and to respond appropriately to supervision, coworkers, and work pressures in a work setting.

(d) *Other sources.* In addition to evidence from the acceptable medical sources listed in paragraph (a) of this section, we may also use evidence from other sources to show the severity of your impairment(s) and how it affects your ability to work. Other sources include, but are not limited to—

(1) Medical sources not listed in paragraph (a) of this section (for example, nurse-practitioners, physicians' assistants, naturopaths, chiropractors, audiologists, and therapists);

(2) Educational personnel (for example, school teachers, counselors, early intervention team members, developmental center workers, and daycare center workers);

(3) Public and private social welfare agency personnel; and

(4) Other non-medical sources (for example, spouses, parents and other caregivers, siblings, other relatives, friends, neighbors, and clergy).

(e) *Completeness.* The evidence in your case record, including the medical evidence from acceptable medical sources (containing the clinical and laboratory findings) and other medical sources not listed in paragraph (a) of this section, information you give us about your medical condition(s) and how it affects you, and other evidence from other sources, must be complete and detailed

enough to allow us to make a determination or decision about whether you are disabled or blind. It must allow us to determine—

(1) The nature and severity of your impairment(s) for any period in question;

(2) Whether the duration requirement described in §404.1509 is met; and

(3) Your residual functional capacity to do work-related physical and mental activities, when the evaluation steps described in §404.1520(e) or (f)(1) apply.

[45 FR 55584, Aug. 20, 1980, as amended at 56 FR 36955, Aug. 1, 1991; 65 FR 11875, Mar. 7, 2000; 65 FR 34957, June 1, 2000; 71 FR 16444, Mar. 31, 2006; 72 FR 9242, Mar. 1, 2007; 76 FR 24806, May 3, 2011; 78 FR 46501, Aug. 1, 2013]

§404.1514 When we will purchase existing evidence.

We need specific medical evidence to determine whether you are disabled or blind. You are responsible for providing that evidence. However, we will pay physicians not employed by the Federal government and other non-Federal providers of medical services for the reasonable cost of providing us with existing medical evidence that we need and ask for after November 30, 1980.

[46 FR 45757, Sept. 15, 1981]

§404.1515 Where and how to submit evidence.

You may give us evidence about your impairment at any of our offices or at the office of any State agency authorized to make disability determinations. You may also give evidence to one of our employees authorized to accept evidence at another place. For more information about this, see subpart H of this part.

§404.1516 If you fail to submit medical and other evidence.

If you do not give us the medical and other evidence that we need and request, we will have to make a decision based on information available in your case. We will not excuse you from giving us evidence because you have religious or personal reasons against medical examinations, tests, or treatment.

§404.1517 Consultative examination at our expense.

If your medical sources cannot or will not give us sufficient medical evidence about your impairment for us to determine whether you are disabled or blind, we may ask you to have one or more physical or mental examinations or tests. We will pay for these examinations. However, we will not pay for any medical examination arranged by you or your representative without our advance approval. If we arrange for the examination or test, we will give you reasonable notice of the date, time, and place the examination or test will be given, and the name of the person or facility who will do it. We will also give the examiner any necessary background information about your condition.

[56 FR 36956, Aug. 1, 1991]

§404.1518 If you do not appear at a consultative examination.

(a) *General*. If you are applying for benefits and do not have a good reason for failing or refusing to take part in a consultative examination or test which we arrange for you to get information we need to determine your disability or blindness, we may find that you are not disabled or blind. If you are already receiving benefits and do not have a good reason for failing or refusing to take part in a consultative examination or test which we arranged for you, we may determine that your disability or blindness has stopped because of your failure or refusal. Therefore, if you have any reason why you cannot go for the scheduled appointment, you should tell us about this as soon as possible before the examination date. If you have a good reason, we will schedule another examination. We will consider your physical, mental, educational, and linguistic limitations (including any lack of facility with the English language) when determining if you have a good reason for failing to attend a consultative examination.

(b) *Examples of good reasons for failure to appear*. Some examples of what we consider good reasons for not going to a scheduled examination include—

(1) Illness on the date of the scheduled examination or test;

(2) Not receiving timely notice of the scheduled examination or test, or receiving no notice at all;

(3) Being furnished incorrect or incomplete information, or being given incorrect information about the physician involved or the time or place of the examination or test, or;

(4) Having had death or serious illness occur in your immediate family.

(c) *Objections by your physician.* If any of your treating physicians tell you that you should not take the examination or test, you should tell us at once. In many cases, we may be able to get the information we need in another way. Your physician may agree to another type of examination for the same purpose.

[45 FR 55584, Aug. 20, 1980, as amended at 59 FR 1635, Jan. 12, 1994]

STANDARDS TO BE USED IN DETERMINING WHEN A CONSULTATIVE EXAMINATION WILL BE OBTAINED IN CONNECTION WITH DISABILITY DETERMINATIONS

§ 404.1519 The consultative examination.

A consultative examination is a physical or mental examination or test purchased for you at our request and expense from a treating source or another medical source, including a pediatrician when appropriate. The decision to purchase a consultative examination will be made on an individual case basis in accordance with the provisions of §§ 404.1519a through 404.1519f. Selection of the source for the examination will be consistent with the provisions of § 404.1503a and §§ 404.1519g through 404.1519j. The rules and procedures for requesting consultative examinations set forth in §§ 404.1519a and 404.1519b are applicable at the reconsideration and hearing levels of review, as well as the initial level of determination.

[56 FR 36956, Aug. 1, 1991, as amended at 65 FR 11875, Mar. 7, 2000]

§ 404.1519a When we will purchase a consultative examination and how we will use it.

(a) *General.* If we cannot get the information we need from your medical sources, we may decide to purchase a consultative examination. See § 404.1512 for the procedures we will follow to obtain evidence from your medical sources and § 404.1520b for how we consider evidence. Before purchasing a consultative examination, we will consider not only existing medical reports, but also the disability interview form containing your allegations as well as other pertinent evidence in your file.

(b) *Situations that may require a consultative examination.* We may purchase a consultative examination to try to resolve an inconsistency in the evidence, or when the evidence as a whole is insufficient to allow us to make a determination or decision on your claim. Some examples of when we might purchase a consultative examination to secure needed medical evidence, such as clinical findings, laboratory tests, a diagnosis, or prognosis, include but are not limited to:

(1) The additional evidence needed is not contained in the records of your medical sources;

(2) The evidence that may have been available from your treating or other medical sources cannot be obtained for reasons beyond your control, such as death or noncooperation of a medical source;

(3) Highly technical or specialized medical evidence that we need is not available from your treating or other medical sources; or

(4) There is an indication of a change in your condition that is likely to affect your ability to work, but the current severity of your impairment is not established.

[56 FR 36956, Aug. 1, 1991, as amended at 77 FR 10655, Feb. 23, 2012]

§ 404.1519b When we will not purchase a consultative examination.

We will not purchase a consultative examination in situations including, but not limited to, the following situations:

(a) In period of disability and disability insurance benefit claims, when you do not meet the insured status requirement in the calendar quarter you allege you became disabled or later and there is no possibility of establishing an earlier onset;

(b) In claims for widow's or widower's benefits based on disability, when your

alleged month of disability is after the end of the 7-year period specified in § 404.335(c)(1) and there is no possibility of establishing an earlier onset date, or when the 7-year period expired in the past and there is no possibility of establishing an onset date prior to the date the 7-year period expired;

(c) In disability insurance benefit claims, when your insured status expired in the past and there is no possibility of establishing an onset date prior to the date your insured status expired;

(d) When any issues about your actual performance of substantial gainful activity or gainful activity have not been resolved;

(e) In claims for child's benefits based on disability, when it is determined that your alleged disability did not begin before the month you attained age 22, and there is no possibility of establishing an onset date earlier than the month in which you attained age 22;

(f) In claims for child's benefits based on disability that are filed concurrently with the insured individual's claim and entitlement cannot be established for the insured individual;

(g) In claims for child's benefits based on disability where entitlement is precluded based on other nondisability factors.

[56 FR 36956, Aug. 1, 1991]

STANDARDS FOR THE TYPE OF REFERRAL AND FOR REPORT CONTENT

§ 404.1519f Type of purchased examinations.

We will purchase only the specific examinations and tests we need to make a determination in your claim. For example, we will not authorize a comprehensive medical examination when the only evidence we need is a special test, such as an X-ray, blood studies, or an electrocardiogram.

[56 FR 36956, Aug. 1, 1991]

§ 404.1519g Who we will select to perform a consultative examination.

(a) We will purchase a consultative examination only from a qualified medical source. The medical source may be your own physician or psychologist, or another source. If you are a child, the medical source we choose may be a pediatrician. For a more complete list of medical sources, see § 404.1513.

(b) By ''qualified,'' we mean that the medical source must be currently licensed in the State and have the training and experience to perform the type of examination or test we will request; the medical source must not be barred from participation in our programs under the provisions of § 404.1503a. The medical source must also have the equipment required to provide an adequate assessment and record of the existence and level of severity of your alleged impairments.

(c) The medical source we choose may use support staff to help perform the consultative examination. Any such support staff (e.g., X-ray technician, nurse) must meet appropriate licensing or certification requirements of the State. See § 404.1503a.

[56 FR 36957, Aug. 1, 1991, as amended at 65 FR 11876, Mar. 7, 2000]

§ 404.1519h Your treating source.

When in our judgment your treating source is qualified, equipped, and willing to perform the additional examination or tests for the fee schedule payment, and generally furnishes complete and timely reports, your treating source will be the preferred source to do the purchased examination. Even if only a supplemental test is required, your treating source is ordinarily the preferred source.

[65 FR 11876, Mar. 7, 2000]

§ 404.1519i Other sources for consultative examinations.

We will use a medical source other than your treating source for a purchased examination or test in situations including, but not limited to, the following situations:

(a) Your treating source prefers not to perform such an examination or does not have the equipment to provide the specific data needed;

(b) There are conflicts or inconsistencies in your file that cannot be resolved by going back to your treating source;

(c) You prefer a source other than your treating source and have a good reason for your preference;

(d) We know from prior experience that your treating source may not be a productive source, e.g., he or she has consistently failed to provide complete or timely reports.

[65 FR 11876, Mar. 7, 2000]

§ 404.1519j Objections to the medical source designated to perform the consultative examination.

You or your representative may object to your being examined by a medical source we have designated to perform a consultative examination. If there is a good reason for the objection, we will schedule the examination with another medical source. A good reason may be that the medical source we designated had previously represented an interest adverse to you. For example, the medical source may have represented your employer in a workers' compensation case or may have been involved in an insurance claim or legal action adverse to you. Other things we will consider include: The presence of a language barrier, the medical source's office location (e.g., 2nd floor, no elevator), travel restrictions, and whether the medical source had examined you in connection with a previous disability determination or decision that was unfavorable to you. If your objection is that a medical source allegedly ''lacks objectivity'' in general, but not in relation to you personally, we will review the allegations. See § 404.1519s. To avoid a delay in processing your claim, the consultative examination in your case will be changed to another medical source while a review is being conducted. We will handle any objection to use of the substitute medical source in the same manner. However, if we had previously conducted such a review and found that the reports of the medical source in question conformed to our guidelines, we will not change your examination.

[65 FR 11876, Mar. 7, 2000]

§ 404.1519k Purchase of medical examinations, laboratory tests, and other services.

We may purchase medical examinations, including psychiatric and psychological examinations, X-rays and laboratory tests (including specialized tests, such as pulmonary function studies, electrocardiograms, and stress tests) from a medical source.

(a) The rate of payment for purchasing medical or other services necessary to make determinations of disability may not exceed the highest rate paid by Federal or public agencies in the State for the same or similar types of service. *See* §§ 404.1624 and 404.1626 of this part.

(b) If a physician's bill or a request for payment for a physician's services includes a charge for a laboratory test for which payment may be made under this part, the amount payable with respect to the test shall be determined as follows:

(1) If the bill or request for payment indicates that the test was personally performed or supervised by the physician who submitted the bill (or for whose services the request for payment was made) or by another physician with whom that physician shares his or her practice, the payment will be based on the physician's usual and customary charge for the test or the rates of payment which the State uses for purchasing such services, whichever is the lesser amount.

(2) If the bill or request for payment indicates that the test was performed by an independent laboratory, the amount of reimbursement will not exceed the billed cost of the independent laboratory or the rate of payment which the State uses for purchasing such services, whichever is the lesser amount. A nominal payment may be made to the physician for collecting, handling and shipping a specimen to the laboratory if the physician bills for such a service. The total reimbursement may not exceed the rate of payment which the State uses for purchasing such services.

(c) The State will assure that it can support the rate of payment it uses. The State shall also be responsible for monitoring and overseeing the rate of payment it uses to ensure compliance with paragraphs (a) and (b) of this section.

[56 FR 36957, Aug. 1, 1991, as amended at 65 FR 11876, Mar. 7, 2000; 71 FR 16444, Mar. 31, 2006; 76 FR 24806, May 3, 2011]

§404.1519m Diagnostic tests or procedures.

We will request the results of any diagnostic tests or procedures that have been performed as part of a workup by your treating source or other medical source and will use the results to help us evaluate impairment severity or prognosis. However, we will not order diagnostic tests or procedures that involve significant risk to you, such as myelograms, arteriograms, or cardiac catheterizations for the evaluation of disability under the Social Security program. A State agency medical consultant must approve the ordering of any diagnostic test or procedure when there is a chance it may involve significant risk. The responsibility for deciding whether to perform the examination rests with the medical source designated to perform the consultative examination.

[56 FR 36957, Aug. 1, 1991, as amended at 65 FR 11876, Mar. 7, 2000; 71 FR 16444, Mar. 31, 2006; 76 FR 24806, May 3, 2011]

§404.1519n Informing the medical source of examination scheduling, report content, and signature requirements.

The medical sources who perform consultative examinations will have a good understanding of our disability programs and their evidentiary requirements. They will be made fully aware of their responsibilities and obligations regarding confidentiality as described in §401.105(e). We will fully inform medical sources who perform consultative examinations at the time we first contact them, and at subsequent appropriate intervals, of the following obligations:

(a) *Scheduling*. In scheduling full consultative examinations, sufficient time should be allowed to permit the medical source to take a case history and perform the examination, including any needed tests. The following minimum scheduling intervals (*i.e.*, time set aside for the individual, not the actual duration of the consultative examination) should be used.

(1) Comprehensive general medical examination—at least 30 minutes;

(2) Comprehensive musculoskeletal or neurological examination—at least 20 minutes;

(3) Comprehensive psychiatric examination—at least 40 minutes;

(4) Psychological examination—at least 60 minutes (Additional time may be required depending on types of psychological tests administered); and

(5) All others—at least 30 minutes, or in accordance with accepted medical practices.

We recognize that actual practice will dictate that some examinations may require longer scheduling intervals depending on the circumstances in a particular situation. We also recognize that these minimum intervals may have to be adjusted to allow for those claimants who do not attend their scheduled examination. The purpose of these minimum scheduling timeframes is to ensure that such examinations are complete and that sufficient time is made available to obtain the information needed to make an accurate determination in your case. State agencies will monitor the scheduling of examinations (through their normal consultative examination oversight activities) to ensure that any overscheduling is avoided, as overscheduling may lead to examinations that are not thorough.

(b) *Report content*. The reported results of your medical history, examination, requested laboratory findings, discussions and conclusions must conform to accepted professional standards and practices in the medical field for a complete and competent examination. The facts in a particular case and the information and findings already reported in the medical and other evidence of record will dictate the extent of detail needed in the consultative examination report for that case. Thus, the detail and format for reporting the results of a purchased examination will vary depending upon the type of examination or testing requested. The reporting of information will differ from one type of examination to another when the requested examination relates to the performance of tests such as ventilatory function tests, treadmill exercise tests, or audiological tests. The medical report must be complete enough to help us determine the nature, severity, and duration of the impairment, and residual functional capacity. The report should reflect your

statement of your symptoms, not simply the medical source's statements or conclusions. The medical source's report of the consultative examination should include the objective medical facts as well as observations and opinions.

(c) *Elements of a complete consultative examination.* A complete consultative examination is one which involves all the elements of a standard examination in the applicable medical specialty. When the report of a complete consultative examination is involved, the report should include the following elements:

(1) Your major or chief complaint(s);

(2) A detailed description, within the area of specialty of the examination, of the history of your major complaint(s);

(3) A description, and disposition, of pertinent ''positive'' and ''negative'' detailed findings based on the history, examination and laboratory tests related to the major complaint(s), and any other abnormalities or lack thereof reported or found during examination or laboratory testing;

(4) The results of laboratory and other tests (e.g., X-rays) performed according to the requirements stated in the Listing of Impairments (see appendix 1 of this subpart P);

(5) The diagnosis and prognosis for your impairment(s);

(6) A statement about what you can still do despite your impairment(s), unless the claim is based on statutory blindness. This statement should describe the opinion of the medical source about your ability, despite your impairment(s), to do work-related activities, such as sitting, standing, walking, lifting, carrying, handling objects, hearing, speaking, and traveling; and, in cases of mental impairment(s), the opinion of the medical source about your ability to understand, to carry out and remember instructions, and to respond appropriately to supervision, coworkers and work pressures in a work setting. Although we will ordinarily request, as part of the consultative examination process, a medical source statement about what you can still do despite your impairment(s), the absence of such a statement in a consultative examination report will not make the report incomplete. See § 404.1527; and

(7) In addition, the medical source will consider, and provide some explanation or comment on, your major complaint(s) and any other abnormalities found during the history and examination or reported from the laboratory tests. The history, examination, evaluation of laboratory test results, and the conclusions will represent the information provided by the medical source who signs the report.

(d) *When a complete consultative examination is not required.* When the evidence we need does not require a complete consultative examination (for example, we need only a specific laboratory test result to complete the record), we may not require a report containing all of the elements in paragraph (c).

(e) *Signature requirements.* All consultative examination reports will be personally reviewed and signed by the medical source who actually performed the examination. This attests to the fact that the medical source doing the examination or testing is solely responsible for the report contents and for the conclusions, explanations or comments provided with respect to the history, examination and evaluation of laboratory test results. The signature of the medical source on a report annotated ''not proofed'' or ''dictated but not read'' is not acceptable. A rubber stamp signature of a medical source or the medical source's signature entered by any other person is not acceptable.

[56 FR 36958, Aug. 1, 1991, as amended at 65 FR 11876, Mar. 7, 2000]

§ 404.1519o When a properly signed consultative examination report has not been received.

If a consultative examination report is received unsigned or improperly signed we will take the following action.

(a) *When we will make determinations and decisions without a properly signed report.* We will make a determination or decision in the circumstances specified in paragraphs (a)(1) and (a)(2) of this section without waiting for a properly signed consultative examination report. After we have made the determination or decision, we will obtain a

properly signed report and include it in the file unless the medical source who performed the original consultative examination has died:

(1) Continuous period of disability allowance with an onset date as alleged or earlier than alleged; or

(2) Continuance of disability.

(b) *When we will not make determinations and decisions without a properly signed report.* We will not use an unsigned or improperly signed consultative examination report to make the determinations or decisions specified in paragraphs (b)(1), (b)(2), (b)(3), and (b)(4) of this section. When we need a properly signed consultative examination report to make these determinations or decisions, we must obtain such a report. If the signature of the medical source who performed the original examination cannot be obtained because the medical source is out of the country for an extended period of time, or on an extended vacation, seriously ill, deceased, or for any other reason, the consultative examination will be rescheduled with another medical source:

(1) Denial; or

(2) Cessation; or

(3) Allowance of a period of disability which has ended; or

(4) Allowance with an onset date later than alleged.

[56 FR 36958, Aug. 1, 1991, as amended at 65 FR 11877, Mar. 7, 2000]

§ 404.1519p Reviewing reports of consultative examinations.

(a) We will review the report of the consultative examination to determine whether the specific information requested has been furnished. We will consider the following factors in reviewing the report:

(1) Whether the report provides evidence which serves as an adequate basis for decisionmaking in terms of the impairment it assesses;

(2) Whether the report is internally consistent; Whether all the diseases, impairments and complaints described in the history are adequately assessed and reported in the clinical findings; Whether the conclusions correlate the findings from your medical history, clinical examination and laboratory tests and explain all abnormalities;

(3) Whether the report is consistent with the other information available to us within the specialty of the examination requested; Whether the report fails to mention an important or relevant complaint within that specialty that is noted in other evidence in the file (e.g., your blindness in one eye, amputations, pain, alcoholism, depression);

(4) Whether this is an adequate report of examination as compared to standards set out in the course of a medical education; and

(5) Whether the report is properly signed.

(b) If the report is inadequate or incomplete, we will contact the medical source who performed the consultative examination, give an explanation of our evidentiary needs, and ask that the medical source furnish the missing information or prepare a revised report.

(c) With your permission, or when the examination discloses new diagnostic information or test results that reveal a potentially life-threatening situation, we will refer the consultative examination report to your treating source. When we refer the consultative examination report to your treating source without your permission, we will notify you that we have done so.

(d) We will perform ongoing special management studies on the quality of consultative examinations purchased from major medical sources and the appropriateness of the examinations authorized.

(e) We will take steps to ensure that consultative examinations are scheduled only with medical sources who have access to the equipment required to provide an adequate assessment and record of the existence and level of severity of your alleged impairments.

[56 FR 36959, Aug. 1, 1991, as amended at 65 FR 11877, Mar. 7, 2000]

§ 404.1519q Conflict of interest.

All implications of possible conflict of interest between medical or psychological consultants and their medical or psychological practices will be avoided. Such consultants are not only those physicians and psychologists who work for us directly but are also those who do review and adjudication work in the State agencies. Physicians and

psychologists who work for us directly as employees or under contract will not work concurrently for a State agency. Physicians and psychologists who do review work for us will not perform consultative examinations for us without our prior approval. In such situations, the physician or psychologist will disassociate himself or herself from further involvement in the case and will not participate in the evaluation, decision, or appeal actions. In addition, neither they, nor any member of their families, will acquire or maintain, either directly or indirectly, any financial interest in a medical partnership, corporation, or similar relationship in which consultative examinations are provided. Sometimes physicians and psychologists who do review work for us will have prior knowledge of a case; for example, when the claimant was a patient. Where this is so, the physician or psychologist will not participate in the review or determination of the case. This does not preclude the physician or psychologist from submitting medical evidence based on treatment or examination of the claimant.

[56 FR 36959, Aug. 1, 1991]

AUTHORIZING AND MONITORING THE REFERRAL PROCESS

§ 404.1519s Authorizing and monitoring the consultative examination.

(a) Day-to-day responsibility for the consultative examination process rests with the State agencies that make disability determinations for us.

(b) The State agency will maintain a good working relationship with the medical community in order to recruit sufficient numbers of physicians and other providers of medical services to ensure ready availability of consultative examination providers.

(c) Consistent with Federal and State laws, the State agency administrator will work to achieve appropriate rates of payment for purchased medical services.

(d) Each State agency will be responsible for comprehensive oversight management of its consultative examination program, with special emphasis on key providers.

(e) A key consultative examination provider is a provider that meets at least one of the following conditions:

(1) Any consultative examination provider with an estimated annual billing to the disability programs we administer of at least $150,000; or

(2) Any consultative examination provider with a practice directed primarily towards evaluation examinations rather than the treatment of patients; or

(3) Any consultative examination provider that does not meet the above criteria, but is one of the top five consultative examination providers in the State by dollar volume, as evidenced by prior year data.

(f) State agencies have flexibility in managing their consultative examination programs, but at a minimum will provide:

(1) An ongoing active recruitment program for consultative examination providers;

(2) A process for orientation, training, and review of new consultative examination providers, with respect to SSA's program requirements involving consultative examination report content and not with respect to medical techniques;

(3) Procedures for control of scheduling consultative examinations;

(4) Procedures to ensure that close attention is given to specific evaluation issues involved in each case;

(5) Procedures to ensure that only required examinations and tests are authorized in accordance with the standards set forth in this subpart;

(6) Procedures for providing medical or supervisory approval for the authorization or purchase of consultative examinations and for additional tests or studies requested by consulting medical sources. This includes physician approval for the ordering of any diagnostic test or procedure where the question of significant risk to the claimant/beneficiary might be raised. See § 404.1519m.

(7) Procedures for the ongoing review of consultative examination results to ensure compliance with written guidelines;

(8) Procedures to encourage active participation by physicians in the consultative examination oversight program;

(9) Procedures for handling complaints;

(10) Procedures for evaluating claimant reactions to key providers; and

(11) A program of systematic, onsite reviews of key providers that will include annual onsite reviews of such providers when claimants are present for examinations. This provision does not contemplate that such reviews will involve participation in the actual examinations but, rather, offer an opportunity to talk with claimants at the provider's site before and after the examination and to review the provider's overall operation.

(g) The State agencies will cooperate with us when we conduct monitoring activities in connection with their oversight management of their consultative examination programs.

[56 FR 36959, Aug. 1, 1991, as amended at 65 FR 11877, Mar. 7, 2000; 71 FR 16444, Mar. 31, 2006; 75 FR 32846, June 10, 2010; 76 FR 24806, May 3, 2011]

PROCEDURES TO MONITOR THE CONSULTATIVE EXAMINATION

§ 404.1519t Consultative examination oversight.

(a) We will ensure that referrals for consultative examinations and purchases of consultative examinations are made in accordance with our policies. We will also monitor both the referral processes and the product of the consultative examinations obtained. This monitoring may include reviews by independent medical specialists under direct contract with SSA.

(b) Through our regional offices, we will undertake periodic comprehensive reviews of each State agency to evaluate each State's management of the consultative examination process. The review will involve visits to key providers, with State staff participating, including a program physician when the visit will deal with medical techniques or judgment, or factors that go to the core of medical professionalism.

(c) We will also perform ongoing special management studies of the quality of consultative examinations purchased from key providers and other sources and the appropriateness of the examinations authorized.

[56 FR 36960, Aug. 1, 1991]

EVALUATION OF DISABILITY

§ 404.1520 Evaluation of disability in general.

(a) *General*—(1) *Purpose of this section*. This section explains the five-step sequential evaluation process we use to decide whether you are disabled, as defined in § 404.1505.

(2) *Applicability of these rules*. These rules apply to you if you file an application for a period of disability or disability insurance benefits (or both) or for child's insurance benefits based on disability. They also apply if you file an application for widow's or widower's benefits based on disability for months after December 1990. (*See* § 404.1505(a).)

(3) *Evidence considered*. We will consider all evidence in your case record when we make a determination or decision whether you are disabled. See § 404.1520b.

(4) *The five-step sequential evaluation process*. The sequential evaluation process is a series of five ''steps'' that we follow in a set order. See paragraph (h) of this section for an exception to this rule. If we can find that you are disabled or not disabled at a step, we make our determination or decision and we do not go on to the next step. If we cannot find that you are disabled or not disabled at a step, we go on to the next step. Before we go from step three to step four, we assess your residual functional capacity. (*See* paragraph (e) of this section.) We use this residual functional capacity assessment at both step four and step five when we evaluate your claim at these steps. These are the five steps we follow:

(i) At the first step, we consider your work activity, if any. If you are doing substantial gainful activity, we will find that you are not disabled. (*See* paragraph (b) of this section.)

(ii) At the second step, we consider the medical severity of your impairment(s). If you do not have a severe medically determinable physical or mental impairment that meets the duration requirement in § 404.1509, or a

combination of impairments that is severe and meets the duration requirement, we will find that you are not disabled. (*See* paragraph (c) of this section.)

(iii) At the third step, we also consider the medical severity of your impairment(s). If you have an impairment(s) that meets or equals one of our listings in appendix 1 of this subpart and meets the duration requirement, we will find that you are disabled. (*See* paragraph (d) of this section.)

(iv) At the fourth step, we consider our assessment of your residual functional capacity and your past relevant work. If you can still do your past relevant work, we will find that you are not disabled. See paragraphs (f) and (h) of this section and § 404.1560(b).

(v) At the fifth and last step, we consider our assessment of your residual functional capacity and your age, education, and work experience to see if you can make an adjustment to other work. If you can make an adjustment to other work, we will find that you are not disabled. If you cannot make an adjustment to other work, we will find that you are disabled. See paragraphs (g) and (h) of this section and § 404.1560(c).

(5) *When you are already receiving disability benefits.* If you are already receiving disability benefits, we will use a different sequential evaluation process to decide whether you continue to be disabled. We explain this process in § 404.1594(f).

(b) *If you are working.* If you are working and the work you are doing is substantial gainful activity, we will find that you are not disabled regardless of your medical condition or your age, education, and work experience.

(c) *You must have a severe impairment.* If you do not have any impairment or combination of impairments which significantly limits your physical or mental ability to do basic work activities, we will find that you do not have a severe impairment and are, therefore, not disabled. We will not consider your age, education, and work experience. However, it is possible for you to have a period of disability for a time in the past even though you do not now have a severe impairment.

(d) *When your impairment(s) meets or equals a listed impairment in appendix 1.* If you have an impairment(s) which meets the duration requirement and is listed in appendix 1 or is equal to a listed impairment(s), we will find you disabled without considering your age, education, and work experience.

(e) *When your impairment(s) does not meet or equal a listed impairment.* If your impairment(s) does not meet or equal a listed impairment, we will assess and make a finding about your residual functional capacity based on all the relevant medical and other evidence in your case record, as explained in § 404.1545. (See paragraph (g)(2) of this section and § 404.1562 for an exception to this rule.) We use our residual functional capacity assessment at the fourth step of the sequential evaluation process to determine if you can do your past relevant work (paragraph (f) of this section) and at the fifth step of the sequential evaluation process (if the evaluation proceeds to this step) to determine if you can adjust to other work (paragraph (g) of this section).

(f) *Your impairment(s) must prevent you from doing your past relevant work.* If we cannot make a determination or decision at the first three steps of the sequential evaluation process, we will compare our residual functional capacity assessment, which we made under paragraph (e) of this section, with the physical and mental demands of your past relevant work. See paragraph (h) of this section and § 404.1560(b). If you can still do this kind of work, we will find that you are not disabled.

(g) *Your impairment(s) must prevent you from making an adjustment to any other work.* (1) If we find that you cannot do your past relevant work because you have a severe impairment(s) (or you do not have any past relevant work), we will consider the same residual functional capacity assessment we made under paragraph (e) of this section, together with your vocational factors (your age, education, and work experience) to determine if you can make an adjustment to other work. (See § 404.1560(c).) If you can make an adjustment to other work, we will find you not disabled. If you cannot, we will find you disabled.

(2) We use different rules if you meet one of the two special medical-vocational profiles described in § 404.1562. If you meet one of those profiles, we will find that you cannot make an adjustment to other work, and that you are disabled.

(h) *Expedited process.* If we do not find you disabled at the third step, and we do not have sufficient evidence about your past relevant work to make a finding at the fourth step, we may proceed to the fifth step of the sequential evaluation process. If we find that you can adjust to other work based solely on your age, education, and the same residual functional capacity assessment we made under paragraph (e) of this section, we will find that you are not disabled and will not make a finding about whether you can do your past relevant work at the fourth step. If we find that you may be unable to adjust to other work or if § 404.1562 may apply, we will assess your claim at the fourth step and make a finding about whether you can perform your past relevant work. See paragraph (g) of this section and § 404.1560(c).

[50 FR 8727, Mar. 5, 1985; 50 FR 19164, May 7, 1985, as amended at 56 FR 36960, Aug. 1, 1991; 65 FR 80308, Dec. 21, 2000; 68 FR 51161, Aug. 26, 2003; 77 FR 10655, Feb. 23, 2012; 77 FR 43494, July 25, 2012]

§ 404.1520a Evaluation of mental impairments.

(a) *General.* The steps outlined in § 404.1520 apply to the evaluation of physical and mental impairments. In addition, when we evaluate the severity of mental impairments for adults (persons age 18 and over) and in persons under age 18 when Part A of the Listing of Impairments is used, we must follow a special technique at each level in the administrative review process. We describe this special technique in paragraphs (b) through (e) of this section. Using the technique helps us:

(1) Identify the need for additional evidence to determine impairment severity;

(2) Consider and evaluate functional consequences of the mental disorder(s) relevant to your ability to work; and

(3) Organize and present our findings in a clear, concise, and consistent manner.

(b) *Use of the technique.* (1) Under the special technique, we must first evaluate your pertinent symptoms, signs, and laboratory findings to determine whether you have a medically determinable mental impairment(s). See § 404.1508 for more information about what is needed to show a medically determinable impairment. If we determine that you have a medically determinable mental impairment(s), we must specify the symptoms, signs, and laboratory findings that substantiate the presence of the impairment(s) and document our findings in accordance with paragraph (e) of this section.

(2) We must then rate the degree of functional limitation resulting from the impairment(s) in accordance with paragraph (c) of this section and record our findings as set out in paragraph (e) of this section.

(c) *Rating the degree of functional limitation.* (1) Assessment of functional limitations is a complex and highly individualized process that requires us to consider multiple issues and all relevant evidence to obtain a longitudinal picture of your overall degree of functional limitation. We will consider all relevant and available clinical signs and laboratory findings, the effects of your symptoms, and how your functioning may be affected by factors including, but not limited to, chronic mental disorders, structured settings, medication, and other treatment.

(2) We will rate the degree of your functional limitation based on the extent to which your impairment(s) interferes with your ability to function independently, appropriately, effectively, and on a sustained basis. Thus, we will consider such factors as the quality and level of your overall functional performance, any episodic limitations, the amount of supervision or assistance you require, and the settings in which you are able to function. See 12.00C through 12.00H of the Listing of Impairments in appendix 1 to this subpart for more information about the factors we consider when we rate the degree of your functional limitation.

(3) We have identified four broad functional areas in which we will rate the degree of your functional limitation: Activities of daily living; social

functioning; concentration, persistence, or pace; and episodes of decompensation. See 12.00C of the Listing of Impairments.

(4) When we rate the degree of limitation in the first three functional areas (activities of daily living; social functioning; and concentration, persistence, or pace), we will use the following five-point scale: None, mild, moderate, marked, and extreme. When we rate the degree of limitation in the fourth functional area (episodes of decompensation), we will use the following four-point scale: None, one or two, three, four or more. The last point on each scale represents a degree of limitation that is incompatible with the ability to do any gainful activity.

(d) *Use of the technique to evaluate mental impairments.* After we rate the degree of functional limitation resulting from your impairment(s), we will determine the severity of your mental impairment(s).

(1) If we rate the degree of your limitation in the first three functional areas as ''none'' or ''mild'' and ''none'' in the fourth area, we will generally conclude that your impairment(s) is not severe, unless the evidence otherwise indicates that there is more than a minimal limitation in your ability to do basic work activities (see § 404.1521).

(2) If your mental impairment(s) is severe, we will then determine if it meets or is equivalent in severity to a listed mental disorder. We do this by comparing the medical findings about your impairment(s) and the rating of the degree of functional limitation to the criteria of the appropriate listed mental disorder. We will record the presence or absence of the criteria and the rating of the degree of functional limitation on a standard document at the initial and reconsideration levels of the administrative review process, or in the decision at the administrative law judge hearing and Appeals Council levels (in cases in which the Appeals Council issues a decision). See paragraph (e) of this section.

(3) If we find that you have a severe mental impairment(s) that neither meets nor is equivalent in severity to any listing, we will then assess your residual functional capacity.

(e) *Documenting application of the technique.* At the initial and reconsideration levels of the administrative review process, we will complete a standard document to record how we applied the technique. At the administrative law judge hearing and Appeals Council levels (in cases in which the Appeals Council issues a decision), we will document application of the technique in the decision. The following rules apply:

(1) When a State agency medical or psychological consultant makes the determination together with a State agency disability examiner at the initial or reconsideration level of the administrative review process as provided in § 404.1615(c)(1) of this part, the State agency medical or psychological consultant has overall responsibility for assessing medical severity. A State agency disability examiner may assist in preparing the standard document. However, our medical or psychological consultant must review and sign the document to attest that it is complete and that he or she is responsible for its content, including the findings of fact and any discussion of supporting evidence.

(2) When a State agency disability examiner makes the determination alone as provided in § 404.1615(c)(3), the State agency disability examiner has overall responsibility for assessing medical severity and for completing and signing the standard document.

(3) When a disability hearing officer makes a reconsideration determination as provided in § 404.1615(c)(4), the determination must document application of the technique, incorporating the disability hearing officer's pertinent findings and conclusions based on this technique.

(4) At the administrative law judge hearing and Appeals Council levels, the written decision must incorporate the pertinent findings and conclusions based on the technique. The decision must show the significant history, including examination and laboratory findings, and the functional limitations that were considered in reaching a conclusion about the severity of the mental impairment(s). The decision must

include a specific finding as to the degree of limitation in each of the functional areas described in paragraph (c) of this section.

(5) If the administrative law judge requires the services of a medical expert to assist in applying the technique but such services are unavailable, the administrative law judge may return the case to the State agency or the appropriate Federal component, using the rules in § 404.941 of this part, for completion of the standard document. If, after reviewing the case file and completing the standard document, the State agency or Federal component concludes that a determination favorable to you is warranted, it will process the case using the rules found in § 404.941(d) or (e) of this part. If, after reviewing the case file and completing the standard document, the State agency or Federal component concludes that a determination favorable to you is not warranted, it will send the completed standard document and the case to the administrative law judge for further proceedings and a decision.

[65 FR 50774, Aug. 21, 2000; 65 FR 60584, Oct. 12, 2000, as amended at 71 FR 16444, Mar. 31, 2006; 75 FR 62680, Oct. 13, 2010; 76 FR 24806, May 3, 2011]

§ 404.1520b How we consider evidence.

After we review all of the evidence relevant to your claim, including medical opinions (see § 404.1527), we make findings about what the evidence shows. In some situations, we may not be able to make these findings because the evidence in your case record is insufficient or inconsistent. We consider evidence to be insufficient when it does not contain all the information we need to make our determination or decision. We consider evidence to be inconsistent when it conflicts with other evidence, contains an internal conflict, is ambiguous, or when the medical evidence does not appear to be based on medically acceptable clinical or laboratory diagnostic techniques. If the evidence in your case record is insufficient or inconsistent, we may need to take additional actions, as we explain in paragraphs (b) and (c) of this section.

(a) If all of the evidence we receive, including all medical opinion(s), is consistent and there is sufficient evidence for us to determine whether you are disabled, we will make our determination or decision based on that evidence.

(b) If any of the evidence in your case record, including any medical opinion(s), is inconsistent, we will weigh the relevant evidence and see whether we can determine whether you are disabled based on the evidence we have.

(c) If the evidence is consistent but we have insufficient evidence to determine whether you are disabled, or if after weighing the evidence we determine we cannot reach a conclusion about whether you are disabled, we will determine the best way to resolve the inconsistency or insufficiency. The action(s) we take will depend on the nature of the inconsistency or insufficiency. We will try to resolve the inconsistency or insufficiency by taking any one or more of the actions listed in paragraphs (c)(1) through (c)(4) of this section. We might not take all of the actions listed below. We will consider any additional evidence we receive together with the evidence we already have.

(1) We may recontact your treating physician, psychologist, or other medical source. We may choose not to seek additional evidence or clarification from a medical source if we know from experience that the source either cannot or will not provide the necessary evidence. If we obtain medical evidence over the telephone, we will send the telephone report to the source for review, signature, and return;

(2) We may request additional existing records (see § 404.1512);

(3) We may ask you to undergo a consultative examination at our expense (see §§ 404.1517 through 404.1519t); or

(4) We may ask you or others for more information.

(d) When there are inconsistencies in the evidence that we cannot resolve or when, despite efforts to obtain additional evidence, the evidence is insufficient to determine whether you are disabled, we will make a determination or decision based on the evidence we have.

[77 FR 10655, Feb. 23, 2012]

§ 404.1521 What we mean by an impairment(s) that is not severe.

(a) *Non-severe impairment(s).* An impairment or combination of impairments is not severe if it does not significantly limit your physical or mental ability to do basic work activities.

(b) *Basic work activities.* When we talk about basic work activities, we mean the abilities and aptitudes necessary to do most jobs. Examples of these include—

(1) Physical functions such as walking, standing, sitting, lifting, pushing, pulling, reaching, carrying, or handling;

(2) Capacities for seeing, hearing, and speaking;

(3) Understanding, carrying out, and remembering simple instructions;

(4) Use of judgment;

(5) Responding appropriately to supervision, co-workers and usual work situations; and

(6) Dealing with changes in a routine work setting.

[50 FR 8728, Mar. 5, 1985]

§ 404.1522 When you have two or more unrelated impairments—initial claims.

(a) *Unrelated severe impairments.* We cannot combine two or more unrelated severe impairments to meet the 12-month duration test. If you have a severe impairment(s) and then develop another unrelated severe impairment(s) but neither one is expected to last for 12 months, we cannot find you disabled, even though the two impairments in combination last for 12 months.

(b) *Concurrent impairments.* If you have two or more concurrent impairments which, when considered in combination, are severe, we must also determine whether the combined effect of your impairments can be expected to continue to be severe for 12 months. If one or more of your impairments improves or is expected to improve within 12 months, so that the combined effect of your remaining impairments is no longer severe, we will find that you do not meet the 12-month duration test.

[50 FR 8728, Mar. 5, 1985]

§ 404.1523 Multiple impairments.

In determining whether your physical or mental impairment or impairments are of a sufficient medical severity that such impairment or impairments could be the basis of eligibility under the law, we will consider the combined effect of all of your impairments without regard to whether any such impairment, if considered separately, would be of sufficient severity. If we do find a medically severe combination of impairments, the combined impact of the impairments will be considered throughout the disability determination process. If we do not find that you have a medically severe combination of impairments, we will determine that you are not disabled (see § 404.1520).

[50 FR 8728, Mar. 5, 1985]

MEDICAL CONSIDERATIONS

§ 404.1525 Listing of Impairments in appendix 1.

(a) *What is the purpose of the Listing of Impairments?* The Listing of Impairments (the listings) is in appendix 1 of this subpart. It describes for each of the major body systems impairments that we consider to be severe enough to prevent an individual from doing any gainful activity, regardless of his or her age, education, or work experience.

(b) *How is appendix 1 organized?* There are two parts in appendix 1:

(1) *Part A* contains criteria that apply to individuals age 18 and over. We may also use part A for individuals who are under age 18 if the disease processes have a similar effect on adults and children.

(2) *Part B* contains criteria that apply only to individuals who are under age 18; we never use the listings in part B to evaluate individuals who are age 18 or older. In evaluating disability for a person under age 18, we use part B first. If the criteria in part B do not apply, we may use the criteria in part A when those criteria give appropriate consideration to the effects of the impairment(s) in children. To the extent possible, we number the provisions in part B to maintain a relationship with their counterparts in part A.

(c) *How do we use the listings?* (1) Most body system sections in parts A and B

of appendix 1 are in two parts: an introduction, followed by the specific listings.

(2) The introduction to each body system contains information relevant to the use of the listings in that body system; for example, examples of common impairments in the body system and definitions used in the listings for that body system. We may also include specific criteria for establishing a diagnosis, confirming the existence of an impairment, or establishing that your impairment(s) satisfies the criteria of a particular listing in the body system. Even if we do not include specific criteria for establishing a diagnosis or confirming the existence of your impairment, you must still show that you have a severe medically determinable impairment(s), as defined in §§ 404.1508 and 404.1520(c).

(3) In most cases, the specific listings follow the introduction in each body system, after the heading, *Category of Impairments*. Within each listing, we specify the objective medical and other findings needed to satisfy the criteria of that listing. We will find that your impairment(s) meets the requirements of a listing when it satisfies all of the criteria of that listing, including any relevant criteria in the introduction, and meets the duration requirement (see § 404.1509).

(4) Most of the listed impairments are permanent or expected to result in death. For some listings, we state a specific period of time for which your impairment(s) will meet the listing. For all others, the evidence must show that your impairment(s) has lasted or can be expected to last for a continuous period of at least 12 months.

(5) If your impairment(s) does not meet the criteria of a listing, it can medically equal the criteria of a listing. We explain our rules for medical equivalence in § 404.1526. We use the listings only to find that you are disabled or still disabled. If your impairment(s) does not meet or medically equal the criteria of a listing, we may find that you are disabled or still disabled at a later step in the sequential evaluation process.

(d) *Can your impairment(s) meet a listing based only on a diagnosis?* No. Your impairment(s) cannot meet the criteria of a listing based only on a diagnosis. To meet the requirements of a listing, you must have a medically determinable impairment(s) that satisfies all of the criteria in the listing.

(e) *How do we consider your symptoms when we determine whether your impairment(s) meets a listing?* Some listed impairments include symptoms, such as pain, as criteria. Section 404.1529(d)(2) explains how we consider your symptoms when your symptoms are included as criteria in a listing.

[71 FR 10428, Mar. 1, 2006, as amended at 76 FR 19696, Apr. 8, 2011]

§ 404.1526 Medical equivalence.

(a) *What is medical equivalence?* Your impairment(s) is medically equivalent to a listed impairment in appendix 1 if it is at least equal in severity and duration to the criteria of any listed impairment.

(b) *How do we determine medical equivalence?* We can find medical equivalence in three ways.

(1)(i) If you have an impairment that is described in appendix 1, but —

(A) You do not exhibit one or more of the findings specified in the particular listing, or

(B) You exhibit all of the findings, but one or more of the findings is not as severe as specified in the particular listing,

(ii) We will find that your impairment is medically equivalent to that listing if you have other findings related to your impairment that are at least of equal medical significance to the required criteria.

(2) If you have an impairment(s) that is not described in appendix 1, we will compare your findings with those for closely analogous listed impairments. If the findings related to your impairment(s) are at least of equal medical significance to those of a listed impairment, we will find that your impairment(s) is medically equivalent to the analogous listing.

(3) If you have a combination of impairments, no one of which meets a listing (see § 404.1525(c)(3)), we will compare your findings with those for closely analogous listed impairments. If the findings related to your impairments are at least of equal medical significance to those of a listed impairment,

we will find that your combination of impairments is medically equivalent to that listing.

(4) Section 404.1529(d)(3) explains how we consider your symptoms, such as pain, when we make findings about medical equivalence.

(c) *What evidence do we consider when we determine if your impairment(s) medically equals a listing?* When we determine if your impairment medically equals a listing, we consider all evidence in your case record about your impairment(s) and its effects on you that is relevant to this finding. We do not consider your vocational factors of age, education, and work experience (see, for example, § 404.1560(c)(1)). We also consider the opinion given by one or more medical or psychological consultants designated by the Commissioner. (See § 404.1616.)

(d) *Who is a designated medical or psychological consultant?* A medical or psychological consultant designated by the Commissioner includes any medical or psychological consultant employed or engaged to make medical judgments by the Social Security Administration, the Railroad Retirement Board, or a State agency authorized to make disability determinations. A medical consultant must be an acceptable medical source identified in § 404.1513(a)(1) or (a)(3) through (a)(5). A psychological consultant used in cases where there is evidence of a mental impairment must be a qualified psychologist. (See § 404.1616 for limitations on what medical consultants who are not physicians can evaluate and the qualifications we consider necessary for a psychologist to be a consultant.)

(e) *Who is responsible for determining medical equivalence?* In cases where the State agency or other designee of the Commissioner makes the initial or reconsideration disability determination, a State agency medical or psychological consultant or other designee of the Commissioner (*see* § 404.1616 of this part) has the overall responsibility for determining medical equivalence. For cases in the disability hearing process or otherwise decided by a disability hearing officer, the responsibility for determining medical equivalence rests with either the disability hearing officer or, if the disability hearing officer's reconsideration determination is changed under § 404.918 of this part, with the Associate Commissioner for Disability Programs or his or her delegate. For cases at the administrative law judge or Appeals Council level, the responsibility for deciding medical equivalence rests with the administrative law judge or Appeals Council.

[45 FR 55584, Aug. 20, 1980, as amended at 52 FR 33926, Sept. 9, 1987; 62 FR 38451, July 18, 1997; 65 FR 34957, June 1, 2000; 71 FR 10429, Mar. 1, 2006; 71 FR 16445, Mar. 31, 2006; 71 FR 57415, Sept. 29, 2006; 76 FR 24807, May 3, 2011]

§ 404.1527 Evaluating opinion evidence.

(a) *General.* (1) You can only be found disabled if you are unable to do any substantial gainful activity by reason of any medically determinable physical or mental impairment which can be expected to result in death or which has lasted or can be expected to last for a continuous period of not less than 12 months. See § 404.1505. Your impairment must result from anatomical, physiological, or psychological abnormalities which are demonstrable by medically acceptable clinical and laboratory diagnostic techniques. See § 404.1508.

(2) Evidence that you submit or that we obtain may contain medical opinions. Medical opinions are statements from physicians and psychologists or other acceptable medical sources that reflect judgments about the nature and severity of your impairment(s), including your symptoms, diagnosis and prognosis, what you can still do despite impairment(s), and your physical or mental restrictions.

(b) *How we consider medical opinions.* In determining whether you are disabled, we will always consider the medical opinions in your case record together with the rest of the relevant evidence we receive. See § 404.1520b.

(c) *How we weigh medical opinions.* Regardless of its source, we will evaluate every medical opinion we receive. Unless we give a treating source's opinion controlling weight under paragraph (c)(2) of this section, we consider all of the following factors in deciding the weight we give to any medical opinion.

(1) *Examining relationship.* Generally, we give more weight to the opinion of

a source who has examined you than to the opinion of a source who has not examined you.

(2) *Treatment relationship.* Generally, we give more weight to opinions from your treating sources, since these sources are likely to be the medical professionals most able to provide a detailed, longitudinal picture of your medical impairment(s) and may bring a unique perspective to the medical evidence that cannot be obtained from the objective medical findings alone or from reports of individual examinations, such as consultative examinations or brief hospitalizations. If we find that a treating source's opinion on the issue(s) of the nature and severity of your impairment(s) is well-supported by medically acceptable clinical and laboratory diagnostic techniques and is not inconsistent with the other substantial evidence in your case record, we will give it controlling weight. When we do not give the treating source's opinion controlling weight, we apply the factors listed in paragraphs (c)(2)(i) and (c)(2)(ii) of this section, as well as the factors in paragraphs (c)(3) through (c)(6) of this section in determining the weight to give the opinion. We will always give good reasons in our notice of determination or decision for the weight we give your treating source's opinion.

(i) *Length of the treatment relationship and the frequency of examination.* Generally, the longer a treating source has treated you and the more times you have been seen by a treating source, the more weight we will give to the source's medical opinion. When the treating source has seen you a number of times and long enough to have obtained a longitudinal picture of your impairment, we will give the source's opinion more weight than we would give it if it were from a nontreating source.

(ii) *Nature and extent of the treatment relationship.* Generally, the more knowledge a treating source has about your impairment(s) the more weight we will give to the source's medical opinion. We will look at the treatment the source has provided and at the kinds and extent of examinations and testing the source has performed or ordered from specialists and independent laboratories. For example, if your ophthalmologist notices that you have complained of neck pain during your eye examinations, we will consider his or her opinion with respect to your neck pain, but we will give it less weight than that of another physician who has treated you for the neck pain. When the treating source has reasonable knowledge of your impairment(s), we will give the source's opinion more weight than we would give it if it were from a nontreating source.

(3) *Supportability.* The more a medical source presents relevant evidence to support an opinion, particularly medical signs and laboratory findings, the more weight we will give that opinion. The better an explanation a source provides for an opinion, the more weight we will give that opinion. Furthermore, because nonexamining sources have no examining or treating relationship with you, the weight we will give their opinions will depend on the degree to which they provide supporting explanations for their opinions. We will evaluate the degree to which these opinions consider all of the pertinent evidence in your claim, including opinions of treating and other examining sources.

(4) *Consistency.* Generally, the more consistent an opinion is with the record as a whole, the more weight we will give to that opinion.

(5) *Specialization.* We generally give more weight to the opinion of a specialist about medical issues related to his or her area of specialty than to the opinion of a source who is not a specialist.

(6) *Other factors.* When we consider how much weight to give to a medical opinion, we will also consider any factors you or others bring to our attention, or of which we are aware, which tend to support or contradict the opinion. For example, the amount of understanding of our disability programs and their evidentiary requirements that an acceptable medical source has, regardless of the source of that understanding, and the extent to which an acceptable medical source is familiar with the other information in your case record are relevant factors that we will consider in deciding the weight to give to a medical opinion.

(d) *Medical source opinions on issues reserved to the Commissioner.* Opinions on some issues, such as the examples that follow, are not medical opinions, as described in paragraph (a)(2) of this section, but are, instead, opinions on issues reserved to the Commissioner because they are administrative findings that are dispositive of a case; *i.e.*, that would direct the determination or decision of disability.

(1) *Opinions that you are disabled.* We are responsible for making the determination or decision about whether you meet the statutory definition of disability. In so doing, we review all of the medical findings and other evidence that support a medical source's statement that you are disabled. A statement by a medical source that you are ''disabled'' or ''unable to work'' does not mean that we will determine that you are disabled.

(2) *Other opinions on issues reserved to the Commissioner.* We use medical sources, including your treating source, to provide evidence, including opinions, on the nature and severity of your impairment(s). Although we consider opinions from medical sources on issues such as whether your impairment(s) meets or equals the requirements of any impairment(s) in the Listing of Impairments in appendix 1 to this subpart, your residual functional capacity (see §§ 404.1545 and 404.1546), or the application of vocational factors, the final responsibility for deciding these issues is reserved to the Commissioner.

(3) We will not give any special significance to the source of an opinion on issues reserved to the Commissioner described in paragraphs (d)(1) and (d)(2) of this section.

(e) *Opinions of nonexamining sources.* We consider all evidence from nonexamining sources to be opinion evidence. When we consider the opinions of nonexamining sources, we apply the rules in paragraphs (a) through (d) of this section. In addition, the following rules apply to State agency medical and psychological consultants, other program physicians and psychologists, and medical experts we consult in connection with administrative law judge hearings and Appeals Council review:

(1) In claims adjudicated by the State agency, a State agency medical or psychological consultant may make the determination of disability together with a State agency disability examiner or provide one or more medical opinions to a State agency disability examiner when the disability examiner makes the initial or reconsideration determination alone (*see* § 404.1615(c) of this part). The following rules apply:

(i) When a State agency medical or psychological consultant makes the determination together with a State agency disability examiner at the initial or reconsideration level of the administrative review process as provided in § 404.1615(c)(1), he or she will consider the evidence in your case record and make findings of fact about the medical issues, including, but not limited to, the existence and severity of your impairment(s), the existence and severity of your symptoms, whether your impairment(s) meets or medically equals the requirements for any impairment listed in appendix 1 to this subpart, and your residual functional capacity. These administrative findings of fact are based on the evidence in your case but are not in themselves evidence at the level of the administrative review process at which they are made.

(ii) When a State agency disability examiner makes the initial determination alone as provided in § 404.1615(c)(3), he or she may obtain the opinion of a State agency medical or psychological consultant about one or more of the medical issues listed in paragraph (e)(1)(i) of this section. In these cases, the State agency disability examiner will consider the opinion of the State agency medical or psychological consultant as opinion evidence and weigh this evidence using the relevant factors in paragraphs (a) through (e) of this section.

(iii) When a State agency disability examiner makes a reconsideration determination alone as provided in § 404.1615(c)(3), he or she will consider findings made by a State agency medical or psychological consultant at the initial level of the administrative review process and any opinions provided by such consultants at the initial and

reconsideration levels as opinion evidence and weigh this evidence using the relevant factors in paragraphs (a) through (e) of this section.

(2) Administrative law judges are responsible for reviewing the evidence and making findings of fact and conclusions of law. They will consider opinions of State agency medical or psychological consultants, other program physicians and psychologists, and medical experts as follows:

(i) Administrative law judges are not bound by any findings made by State agency medical or psychological consultants, or other program physicians or psychologists. State agency medical and psychological consultants and other program physicians, psychologists, and other medical specialists are highly qualified physicians, psychologists, and other medical specialists who are also experts in Social Security disability evaluation. Therefore, administrative law judges must consider findings and other opinions of State agency medical and psychological consultants and other program physicians, psychologists, and other medical specialists as opinion evidence, except for the ultimate determination about whether you are disabled (see §404.1512(b)(8)).

(ii) When an administrative law judge considers findings of a State agency medical or psychological consultant or other program physician, psychologist, or other medical specialist, the administrative law judge will evaluate the findings using the relevant factors in paragraphs (a) through (d) of this section, such as the consultant's medical specialty and expertise in our rules, the supporting evidence in the case record, supporting explanations the medical or psychological consultant provides, and any other factors relevant to the weighing of the opinions. Unless a treating source's opinion is given controlling weight, the administrative law judge must explain in the decision the weight given to the opinions of a State agency medical or psychological consultant or other program physician, psychologist, or other medical specialist, as the administrative law judge must do for any opinions from treating sources, nontreating sources, and other nonexamining sources who do not work for us.

(iii) Administrative law judges may also ask for and consider opinions from medical experts on the nature and severity of your impairment(s) and on whether your impairment(s) equals the requirements of any impairment listed in appendix 1 to this subpart. When administrative law judges consider these opinions, they will evaluate them using the rules in paragraphs (a) through (d) of this section.

(3) When the Appeals Council makes a decision, it will follow the same rules for considering opinion evidence as administrative law judges follow.

[56 FR 36960, Aug. 1, 1991, as amended at 62 FR 38451, July 18, 1997; 65 FR 11877, Mar. 7, 2000; 71 FR 16445, Mar. 31, 2006; 75 FR 62681, Oct. 13, 2010; 76 FR 24807, May 3, 2011; 77 FR 10656, Feb. 23, 2012; 77 FR 43494, July 25, 2012]

§404.1528 Symptoms, signs, and laboratory findings.

(a) *Symptoms* are your own description of your physical or mental impairment. Your statements alone are not enough to establish that there is a physical or mental impairment.

(b) *Signs* are anatomical, physiological, or psychological abnormalities which can be observed, apart from your statements (symptoms). Signs must be shown by medically acceptable clinical diagnostic techniques. Psychiatric signs are medically demonstrable phenomena that indicate specific psychological abnormalities, e.g., abnormalities of behavior, mood, thought, memory, orientation, development, or perception. They must also be shown by observable facts that can be medically described and evaluated.

(c) *Laboratory findings* are anatomical, physiological, or psychological phenomena which can be shown by the use of medically acceptable laboratory diagnostic techniques. Some of these diagnostic techniques include chemical tests, electrophysiological studies (electrocardiogram, electroencephalogram, etc.), roentgenological studies (X-rays), and psychological tests.

[45 FR 55584, Aug. 20, 1980, as amended at 65 FR 50775, Aug. 21, 2000; 71 FR 10429, Mar. 1, 2006]

§ 404.1529 How we evaluate symptoms, including pain.

(a) *General.* In determining whether you are disabled, we consider all your symptoms, including pain, and the extent to which your symptoms can reasonably be accepted as consistent with the objective medical evidence and other evidence. By objective medical evidence, we mean medical signs and laboratory findings as defined in § 404.1528 (b) and (c). By other evidence, we mean the kinds of evidence described in §§ 404.1512(b)(2) through (8) and 404.1513(b)(1), (4), and (5), and (d). These include statements or reports from you, your treating or nontreating source, and others about your medical history, diagnosis, prescribed treatment, daily activities, efforts to work, and any other evidence showing how your impairment(s) and any related symptoms affect your ability to work. We will consider all of your statements about your symptoms, such as pain, and any description you, your treating source or nontreating source, or other persons may provide about how the symptoms affect your activities of daily living and your ability to work. However, statements about your pain or other symptoms will not alone establish that you are disabled; there must be medical signs and laboratory findings which show that you have a medical impairment(s) which could reasonably be expected to produce the pain or other symptoms alleged and which, when considered with all of the other evidence (including statements about the intensity and persistence of your pain or other symptoms which may reasonably be accepted as consistent with the medical signs and laboratory findings), would lead to a conclusion that you are disabled. In evaluating the intensity and persistence of your symptoms, including pain, we will consider all of the available evidence, including your medical history, the medical signs and laboratory findings and statements about how your symptoms affect you. (Section 404.1527 explains how we consider opinions of your treating source and other medical opinions on the existence and severity of your symptoms, such as pain.) We will then determine the extent to which your alleged functional limitations and restrictions due to pain or other symptoms can reasonably be accepted as consistent with the medical signs and laboratory findings and other evidence to decide how your symptoms affect your ability to work.

(b) *Need for medically determinable impairment that could reasonably be expected to produce your symptoms, such as pain.* Your symptoms, such as pain, fatigue, shortness of breath, weakness, or nervousness, will not be found to affect your ability to do basic work activities unless medical signs or laboratory findings show that a medically determinable impairment(s) is present. Medical signs and laboratory findings, established by medically acceptable clinical or laboratory diagnostic techniques, must show the existence of a medical impairment(s) which results from anatomical, physiological, or psychological abnormalities and which could reasonably be expected to produce the pain or other symptoms alleged. In cases decided by a State agency (except in disability hearings under §§ 404.914 through 404.918 of this part and in fully favorable determinations made by State agency disability examiners alone under § 404.1615(c)(3) of this part), a State agency medical or psychological consultant or other medical or psychological consultant designated by the Commissioner directly participates in determining whether your medically determinable impairment(s) could reasonably be expected to produce your alleged symptoms. In the disability hearing process, a medical or psychological consultant may provide an advisory assessment to assist a disability hearing officer in determining whether your impairment(s) could reasonably be expected to produce your alleged symptoms. At the administrative law judge hearing or Appeals Council level of the administrative review process, the adjudicator(s) may ask for and consider the opinion of a medical or psychological expert concerning whether your impairment(s) could reasonably be expected to produce your alleged symptoms. The finding that your impairment(s) could reasonably be expected to produce your pain or other symptoms does not involve a determination as to the intensity, persistence, or functionally limiting effects of

your symptoms. We will develop evidence regarding the possibility of a medically determinable mental impairment when we have information to suggest that such an impairment exists, and you allege pain or other symptoms but the medical signs and laboratory findings do not substantiate any physical impairment(s) capable of producing the pain or other symptoms.

(c) *Evaluating the intensity and persistence of your symptoms, such as pain, and determining the extent to which your symptoms limit your capacity for work*—(1) *General.* When the medical signs or laboratory findings show that you have a medically determinable impairment(s) that could reasonably be expected to produce your symptoms, such as pain, we must then evaluate the intensity and persistence of your symptoms so that we can determine how your symptoms limit your capacity for work. In evaluating the intensity and persistence of your symptoms, we consider all of the available evidence, including your history, the signs and laboratory findings, and statements from you, your treating or nontreating source, or other persons about how your symptoms affect you. We also consider the medical opinions of your treating source and other medical opinions as explained in §404.1527. Paragraphs (c)(2) through (c)(4) of this section explain further how we evaluate the intensity and persistence of your symptoms and how we determine the extent to which your symptoms limit your capacity for work, when the medical signs or laboratory findings show that you have a medically determinable impairment(s) that could reasonably be expected to produce your symptoms, such as pain.

(2) *Consideration of objective medical evidence.* Objective medical evidence is evidence obtained from the application of medically acceptable clinical and laboratory diagnostic techniques, such as evidence of reduced joint motion, muscle spasm, sensory deficit or motor disruption. Objective medical evidence of this type is a useful indicator to assist us in making reasonable conclusions about the intensity and persistence of your symptoms and the effect those symptoms, such as pain, may have on your ability to work. We must always attempt to obtain objective medical evidence and, when it is obtained, we will consider it in reaching a conclusion as to whether you are disabled. However, we will not reject your statements about the intensity and persistence of your pain or other symptoms or about the effect your symptoms have on your ability to work solely because the available objective medical evidence does not substantiate your statements.

(3) *Consideration of other evidence.* Since symptoms sometimes suggest a greater severity of impairment than can be shown by objective medical evidence alone, we will carefully consider any other information you may submit about your symptoms. The information that you, your treating or nontreating source, or other persons provide about your pain or other symptoms (e.g., what may precipitate or aggravate your symptoms, what medications, treatments or other methods you use to alleviate them, and how the symptoms may affect your pattern of daily living) is also an important indicator of the intensity and persistence of your symptoms. Because symptoms, such as pain, are subjective and difficult to quantify, any symptom-related functional limitations and restrictions which you, your treating or nontreating source, or other persons report, which can reasonably be accepted as consistent with the objective medical evidence and other evidence, will be taken into account as explained in paragraph (c)(4) of this section in reaching a conclusion as to whether you are disabled. We will consider all of the evidence presented, including information about your prior work record, your statements about your symptoms, evidence submitted by your treating or nontreating source, and observations by our employees and other persons. Section 404.1527 explains in detail how we consider and weigh treating source and other medical opinions about the nature and severity of your impairment(s) and any related symptoms, such as pain. Factors relevant to your symptoms, such as pain, which we will consider include:

(i) Your daily activities;

(ii) The location, duration, frequency, and intensity of your pain or other symptoms;

(iii) Precipitating and aggravating factors;

(iv) The type, dosage, effectiveness, and side effects of any medication you take or have taken to alleviate your pain or other symptoms;

(v) Treatment, other than medication, you receive or have received for relief of your pain or other symptoms;

(vi) Any measures you use or have used to relieve your pain or other symptoms (e.g., lying flat on your back, standing for 15 to 20 minutes every hour, sleeping on a board, etc.); and

(vii) Other factors concerning your functional limitations and restrictions due to pain or other symptoms.

(4) *How we determine the extent to which symptoms, such as pain, affect your capacity to perform basic work activities.* In determining the extent to which your symptoms, such as pain, affect your capacity to perform basic work activities, we consider all of the available evidence described in paragraphs (c)(1) through (c)(3) of this section. We will consider your statements about the intensity, persistence, and limiting effects of your symptoms, and we will evaluate your statements in relation to the objective medical evidence and other evidence, in reaching a conclusion as to whether you are disabled. We will consider whether there are any inconsistencies in the evidence and the extent to which there are any conflicts between your statements and the rest of the evidence, including your history, the signs and laboratory findings, and statements by your treating or nontreating source or other persons about how your symptoms affect you. Your symptoms, including pain, will be determined to diminish your capacity for basic work activities to the extent that your alleged functional limitations and restrictions due to symptoms, such as pain, can reasonably be accepted as consistent with the objective medical evidence and other evidence.

(d) *Consideration of symptoms in the disability determination process.* We follow a set order of steps to determine whether you are disabled. If you are not doing substantial gainful activity, we consider your symptoms, such as pain, to evaluate whether you have a severe physical or mental impairment(s), and at each of the remaining steps in the process. Sections 404.1520 and 404.1520a explain this process in detail. We also consider your symptoms, such as pain, at the appropriate steps in our review when we consider whether your disability continues. Sections 404.1579 and 404.1594 explain the procedure we follow in reviewing whether your disability continues.

(1) *Need to establish a severe medically determinable impairment(s).* Your symptoms, such as pain, fatigue, shortness of breath, weakness, or nervousness, are considered in making a determination as to whether your impairment or combination of impairment(s) is severe. (See § 404.1520(c).)

(2) *Decision whether the Listing of Impairments is met.* Some listed impairments include symptoms usually associated with those impairments as criteria. Generally, when a symptom is one of the criteria in a listing, it is only necessary that the symptom be present in combination with the other criteria. It is not necessary, unless the listing specifically states otherwise, to provide information about the intensity, persistence, or limiting effects of the symptom as long as all other findings required by the specific listing are present.

(3) *Decision whether the Listing of Impairments is medically equaled.* If your impairment is not the same as a listed impairment, we must determine whether your impairment(s) is medically equivalent to a listed impairment. Section 404.1526 explains how we make this determination. Under § 404.1526(b), we will consider medical equivalence based on all evidence in your case record about your impairment(s) and its effects on you that is relevant to this finding. In considering whether your symptoms, signs, and laboratory findings are medically equal to the symptoms, signs, and laboratory findings of a listed impairment, we will look to see whether your symptoms, signs, and laboratory findings are at least equal in severity to the listed criteria. However, we will not substitute

your allegations of pain or other symptoms for a missing or deficient sign or laboratory finding to raise the severity of your impairment(s) to that of a listed impairment. If the symptoms, signs, and laboratory findings of your impairment(s) are equivalent in severity to those of a listed impairment, we will find you disabled. If it does not, we will consider the impact of your symptoms on your residual functional capacity. (See paragraph (d)(4) of this section.)

(4) *Impact of symptoms (including pain) on residual functional capacity*. If you have a medically determinable severe physical or mental impairment(s), but your impairment(s) does not meet or equal an impairment listed in appendix 1 of this subpart, we will consider the impact of your impairment(s) and any related symptoms, including pain, on your residual functional capacity. (See § 404.1545.)

[56 FR 57941, Nov. 14, 1991, as amended at 62 FR 38451, July 18, 1997; 71 FR 10429, Mar. 1, 2006; 71 FR 16445, Mar. 31, 2006; 75 FR 62681, Oct. 13, 2010; 76 FR 24807, May 3, 2011]

§ 404.1530 Need to follow prescribed treatment.

(a) *What treatment you must follow*. In order to get benefits, you must follow treatment prescribed by your physician if this treatment can restore your ability to work.

(b) *When you do not follow prescribed treatment*. If you do not follow the prescribed treatment without a good reason, we will not find you disabled or, if you are already receiving benefits, we will stop paying you benefits.

(c) *Acceptable reasons for failure to follow prescribed treatment*. We will consider your physical, mental, educational, and linguistic limitations (including any lack of facility with the English language) when determining if you have an acceptable reason for failure to follow prescribed treatment. The following are examples of a good reason for not following treatment:

(1) The specific medical treatment is contrary to the established teaching and tenets of your religion.

(2) The prescribed treatment would be cataract surgery for one eye, when there is an impairment of the other eye resulting in a severe loss of vision and is not subject to improvement through treatment.

(3) Surgery was previously performed with unsuccessful results and the same surgery is again being recommended for the same impairment.

(4) The treatment because of its magnitude (e.g., open heart surgery), unusual nature (e.g., organ transplant), or other reason is very risky for you; or

(5) The treatment involves amputation of an extremity, or a major part of an extremity.

[45 FR 55584, Aug. 20, 1980, as amended at 59 FR 1635, Jan. 12, 1994]

§ 404.1535 How we will determine whether your drug addiction or alcoholism is a contributing factor material to the determination of disability.

(a) *General*. If we find that you are disabled and have medical evidence of your drug addiction or alcoholism, we must determine whether your drug addiction or alcoholism is a contributing factor material to the determination of disability.

(b) *Process we will follow when we have medical evidence of your drug addiction or alcoholism*. (1) The key factor we will examine in determining whether drug addiction or alcoholism is a contributing factor material to the determination of disability is whether we would still find you disabled if you stopped using drugs or alcohol.

(2) In making this determination, we will evaluate which of your current physical and mental limitations, upon which we based our current disability determination, would remain if you stopped using drugs or alcohol and then determine whether any or all of your remaining limitations would be disabling.

(i) If we determine that your remaining limitations would not be disabling, we will find that your drug addiction or alcoholism is a contributing factor material to the determination of disability.

(ii) If we determine that your remaining limitations are disabling, you are disabled independent of your drug addiction or alcoholism and we will

find that your drug addiction or alcoholism is not a contributing factor material to the determination of disability.

[60 FR 8147, Feb. 10, 1995]

§ 404.1536 Treatment required for individuals whose drug addiction or alcoholism is a contributing factor material to the determination of disability.

(a) If we determine that you are disabled and drug addiction or alcoholism is a contributing factor material to the determination of disability (as described in § 404.1535), you must avail yourself of appropriate treatment for your drug addiction or alcoholism at an institution or facility approved by us when this treatment is available and make progress in your treatment. Generally, you are not expected to pay for this treatment. You will not be paid benefits for any month after the month we have notified you in writing that—

(1) You did not comply with the terms, conditions and requirements of the treatment which has been made available to you; or

(2) You did not avail yourself of the treatment after you had been notified that it is available to you.

(b) If your benefits are suspended for failure to comply with treatment requirements, your benefits can be reinstated in accordance with the rules in § 404.470.

[60 FR 8147, Feb. 10, 1995]

§ 404.1537 What we mean by appropriate treatment.

By appropriate treatment, we mean treatment for drug addiction or alcoholism that serves the needs of the individual in the least restrictive setting possible consistent with your treatment plan. These settings range from outpatient counseling services through a variety of residential treatment settings including acute detoxification, short-term intensive residential treatment, long-term therapeutic residential treatment, and long-term recovery houses. Appropriate treatment is determined with the involvement of a State licensed or certified addiction professional on the basis of a detailed assessment of the individual's presenting symptomatology, psychosocial profile, and other relevant factors. This assessment may lead to a determination that more than one treatment modality is appropriate for the individual. The treatment will be provided or overseen by an approved institution or facility. This treatment may include (but is not limited to)—

(a) Medical examination and medical management;

(b) Detoxification;

(c) Medication management to include substitution therapy (e.g., methadone);

(d) Psychiatric, psychological, psychosocial, vocational, or other substance abuse counseling in a residential or outpatient treatment setting; or

(e) Relapse prevention.

[60 FR 8148, Feb. 10, 1995]

§ 404.1538 What we mean by approved institutions or facilities.

Institutions or facilities that we may approve include—

(a) An institution or facility that furnishes medically recognized treatment for drug addiction or alcoholism in conformity with applicable Federal or State laws and regulations;

(b) An institution or facility used by or licensed by an appropriate State agency which is authorized to refer persons for treatment of drug addiction or alcoholism;

(c) State licensed or certified care providers;

(d) Programs accredited by the Commission on Accreditation for Rehabilitation Facilities (CARF) and/or the Joint Commission for the Accreditation of Healthcare Organizations (JCAHO) for the treatment of drug addiction or alcoholism;

(e) Medicare or Medicaid certified care providers; or

(f) Nationally recognized self-help drug addiction or alcoholism recovery programs (e.g., Alcoholics Anonymous or Narcotics Anonymous) when participation in these programs is specifically prescribed by a treatment professional at an institution or facility described in paragraphs (a) through (e) of this section as part of an individual's treatment plan.

[60 FR 8148, Feb. 10, 1995]

§404.1539 How we consider whether treatment is available.

Our determination about whether treatment is available to you for your drug addiction or your alcoholism will depend upon—

(a) The capacity of an approved institution or facility to admit you for appropriate treatment;

(b) The location of the approved institution or facility, or the place where treatment, services or resources could be provided to you;

(c) The availability and cost of transportation for you to the place of treatment;

(d) Your general health, including your ability to travel and capacity to understand and follow the prescribed treatment;

(e) Your particular condition and circumstances; and

(f) The treatment that is prescribed for your drug addiction or alcoholism.

[60 FR 8148, Feb. 10, 1995]

§404.1540 Evaluating compliance with the treatment requirements.

(a) *General.* Generally, we will consider information from the treatment institution or facility to evaluate your compliance with your treatment plan. The treatment institution or facility will:

(1) Monitor your attendance at and participation in treatment sessions;

(2) Provide reports of the results of any clinical testing (such as, hematological or urinalysis studies for individuals with drug addiction and hematological studies and breath analysis for individuals with alcoholism) when such tests are likely to yield important information;

(3) Provide observational reports from the treatment professionals familiar with your individual case (subject to verification and Federal confidentiality requirements); or

(4) Provide their assessment or views on your noncompliance with treatment requirements.

(b) *Measuring progress.* Generally, we will consider information from the treatment institution or facility to evaluate your progress in completing your treatment plan. Examples of milestones for measuring your progress with the treatment which has been prescribed for your drug addiction or alcoholism may include (but are not limited to)—

(1) Abstinence from drug or alcohol use (initial progress may include significant reduction in use);

(2) Consistent attendance at and participation in treatment sessions;

(3) Improved social functioning and levels of gainful activity;

(4) Participation in vocational rehabilitation activities; or

(5) Avoidance of criminal activity.

[60 FR 8148, Feb. 10, 1995]

§404.1541 Establishment and use of referral and monitoring agencies.

We will contract with one or more agencies in each of the States, Puerto Rico and the District of Columbia to provide services to individuals whose disabilities are based on a determination that drug addiction or alcoholism is a contributing factor material to the determination of disability (as described in §404.1535) and to submit information to us which we will use to make decisions about these individuals' benefits. These agencies will be known as referral and monitoring agencies. Their duties and responsibilities include (but are not limited to)—

(a) Identifying appropriate treatment placements for individuals we refer to them;

(b) Referring these individuals for treatment;

(c) Monitoring the compliance and progress with the appropriate treatment of these individuals; and

(d) Promptly reporting to us any individual's failure to comply with treatment requirements as well as failure to achieve progress through the treatment.

[60 FR 8148, Feb. 10, 1995]

RESIDUAL FUNCTIONAL CAPACITY

§404.1545 Your residual functional capacity.

(a) *General*—(1) *Residual functional capacity assessment.* Your impairment(s), and any related symptoms, such as pain, may cause physical and mental limitations that affect what you can do in a work setting. Your residual functional capacity is the most you can still do despite your limitations. We

will assess your residual functional capacity based on all the relevant evidence in your case record. (*See* §§ 404.1512(d) through (e).)

(2) *If you have more than one impairment.* We will consider all of your medically determinable impairments of which we are aware, including your medically determinable impairments that are not ''severe,'' as explained in §§ 404.1520(c), 404.1521, and 404.1523, when we assess your residual functional capacity. (See paragraph (e) of this section.)

(3) *Evidence we use to assess your residual functional capacity.* We will assess your residual functional capacity based on all of the relevant medical and other evidence. In general, you are responsible for providing the evidence we will use to make a finding about your residual functional capacity. (*See* § 404.1512(c).) However, before we make a determination that you are not disabled, we are responsible for developing your complete medical history, including arranging for a consultative examination(s) if necessary, and making every reasonable effort to help you get medical reports from your own medical sources. (*See* §§ 404.1512(d) through (f).) We will consider any statements about what you can still do that have been provided by medical sources, whether or not they are based on formal medical examinations. (*See* § 404.1513.) We will also consider descriptions and observations of your limitations from your impairment(s), including limitations that result from your symptoms, such as pain, provided by you, your family, neighbors, friends, or other persons. (*See* paragraph (e) of this section and § 404.1529.)

(4) *What we will consider in assessing residual functional capacity.* When we assess your residual functional capacity, we will consider your ability to meet the physical, mental, sensory, and other requirements of work, as described in paragraphs (b), (c), and (d) of this section.

(5) *How we will use our residual functional capacity assessment.* (i) We will first use our residual functional capacity assessment at step four of the sequential evaluation process to decide if you can do your past relevant work. (*See* §§ 404.1520(f) and 404.1560(b).)

(ii) If we find that you cannot do your past relevant work, you do not have any past relevant work, or if we use the procedures in § 404.1520(h) and § 404.1562 does not apply, we will use the same assessment of your residual functional capacity at step five of the sequential evaluation process to decide if you can adjust to any other work that exists in the national economy. (*See* §§ 404.1520(g) and 404.1566.) At this step, we will not use our assessment of your residual functional capacity alone to decide if you are disabled. We will use the guidelines in §§ 404.1560 through 404.1569a, and consider our residual functional capacity assessment together with the information about your vocational background to make our disability determination or decision. For our rules on residual functional capacity assessment in deciding whether your disability continues or ends, *see* § 404.1594.

(b) *Physical abilities.* When we assess your physical abilities, we first assess the nature and extent of your physical limitations and then determine your residual functional capacity for work activity on a regular and continuing basis. A limited ability to perform certain physical demands of work activity, such as sitting, standing, walking, lifting, carrying, pushing, pulling, or other physical functions (including manipulative or postural functions, such as reaching, handling, stooping or crouching), may reduce your ability to do past work and other work.

(c) *Mental abilities.* When we assess your mental abilities, we first assess the nature and extent of your mental limitations and restrictions and then determine your residual functional capacity for work activity on a regular and continuing basis. A limited ability to carry out certain mental activities, such as limitations in understanding, remembering, and carrying out instructions, and in responding appropriately to supervision, co-workers, and work pressures in a work setting, may reduce your ability to do past work and other work.

(d) *Other abilities affected by impairment(s).* Some medically determinable

impairment(s), such as skin impairment(s), epilepsy, impairment(s) of vision, hearing or other senses, and impairment(s) which impose environmental restrictions, may cause limitations and restrictions which affect other work-related abilities. If you have this type of impairment(s), we consider any resulting limitations and restrictions which may reduce your ability to do past work and other work in deciding your residual functional capacity.

(e) *Total limiting effects.* When you have a severe impairment(s), but your symptoms, signs, and laboratory findings do not meet or equal those of a listed impairment in appendix 1 of this subpart, we will consider the limiting effects of all your impairment(s), even those that are not severe, in determining your residual functional capacity. Pain or other symptoms may cause a limitation of function beyond that which can be determined on the basis of the anatomical, physiological or psychological abnormalities considered alone; e.g., someone with a low back disorder may be fully capable of the physical demands consistent with those of sustained medium work activity, but another person with the same disorder, because of pain, may not be capable of more than the physical demands consistent with those of light work activity on a sustained basis. In assessing the total limiting effects of your impairment(s) and any related symptoms, we will consider all of the medical and nonmedical evidence, including the information described in § 404.1529(c).

[56 FR 57943, Nov. 14, 1991, as amended at 68 FR 51162, Aug. 26, 2003; 77 FR 10656, Feb. 23, 2012; 77 FR 43494, July 25, 2012]

§ 404.1546 Responsibility for assessing your residual functional capacity.

(a) *Responsibility for assessing residual functional capacity at the State agency.* When a State agency medical or psychological consultant and a State agency disability examiner make the disability determination as provided in § 404.1615(c)(1) of this part, a State agency medical or psychological consultant(s) is responsible for assessing your residual functional capacity. When a State agency disability examiner makes a disability determination alone as provided in § 404.1615(c)(3), the disability examiner is responsible for assessing your residual functional capacity.

(b) *Responsibility for assessing residual functional capacity in the disability hearings process.* If your case involves a disability hearing under § 404.914, a disability hearing officer is responsible for assessing your residual functional capacity. However, if the disability hearing officer's reconsidered determination is changed under § 404.918, the Associate Commissioner for the Office of Disability Determinations or his or her delegate is responsible for assessing your residual functional capacity.

(c) *Responsibility for assessing residual functional capacity at the administrative law judge hearing or Appeals Council level.* If your case is at the administrative law judge hearing level or at the Appeals Council review level, the administrative law judge or the administrative appeals judge at the Appeals Council (when the Appeals Council makes a decision) is responsible for assessing your residual functional capacity.

[68 FR 51162, Aug. 26, 2003, as amended at 71 FR 16445, Mar. 31, 2006; 75 FR 62681, Oct. 13, 2010; 76 FR 24807, May 3, 2011]

VOCATIONAL CONSIDERATIONS

§ 404.1560 When we will consider your vocational background.

(a) *General.* If you are applying for a period of disability, or disability insurance benefits as a disabled worker, or child's insurance benefits based on disability which began before age 22, or widow's or widower's benefits based on disability for months after December 1990, and we cannot decide whether you are disabled at one of the first three steps of the sequential evaluation process (*see* § 404.1520), we will consider your residual functional capacity together with your vocational background, as discussed in paragraphs (b) and (c) of this section.

(b) *Past relevant work.* We will first compare our assessment of your residual functional capacity with the physical and mental demands of your past relevant work. See § 404.1520(h) for an exception to this rule.

(1) *Definition of past relevant work.* Past relevant work is work that you have done within the past 15 years, that was substantial gainful activity, and that lasted long enough for you to learn to do it. (*See* § 404.1565(a).)

(2) *Determining whether you can do your past relevant work.* We will ask you for information about work you have done in the past. We may also ask other people who know about your work. (*See* § 404.1565(b).) We may use the services of vocational experts or vocational specialists, or other resources, such as the ''Dictionary of Occupational Titles'' and its companion volumes and supplements, published by the Department of Labor, to obtain evidence we need to help us determine whether you can do your past relevant work, given your residual functional capacity. A vocational expert or specialist may offer relevant evidence within his or her expertise or knowledge concerning the physical and mental demands of a claimant's past relevant work, either as the claimant actually performed it or as generally performed in the national economy. Such evidence may be helpful in supplementing or evaluating the accuracy of the claimant's description of his past work. In addition, a vocational expert or specialist may offer expert opinion testimony in response to a hypothetical question about whether a person with the physical and mental limitations imposed by the claimant's medical impairment(s) can meet the demands of the claimant's previous work, either as the claimant actually performed it or as generally performed in the national economy.

(3) *If you can do your past relevant work.* If we find that you have the residual functional capacity to do your past relevant work, we will determine that you can still do your past work and are not disabled. We will not consider your vocational factors of age, education, and work experience or whether your past relevant work exists in significant numbers in the national economy.

(c) *Other work.* (1) If we find that your residual functional capacity does not enable you to do any of your past relevant work or if we use the procedures in § 404.1520(h), we will use the same residual functional capacity assessment when we decide if you can adjust to any other work. We will look at your ability to adjust to other work by considering your residual functional capacity and the vocational factors of age, education, and work experience, as appropriate in your case. (*See* § 404.1520(h) for an exception to this rule.) Any other work (jobs) that you can adjust to must exist in significant numbers in the national economy (either in the region where you live or in several regions in the country).

(2) In order to support a finding that you are not disabled at this fifth step of the sequential evaluation process, we are responsible for providing evidence that demonstrates that other work exists in significant numbers in the national economy that you can do, given your residual functional capacity and vocational factors. We are not responsible for providing additional evidence about your residual functional capacity because we will use the same residual functional capacity assessment that we used to determine if you can do your past relevant work.

[68 FR 51163, Aug. 26, 2003, as amended at 77 FR 43494, July 25, 2012]

§ 404.1562 Medical-vocational profiles showing an inability to make an adjustment to other work.

(a) *If you have done only arduous unskilled physical labor.* If you have no more than a marginal education (*see* § 404.1564) and work experience of 35 years or more during which you did only arduous unskilled physical labor, and you are not working and are no longer able to do this kind of work because of a severe impairment(s) (*see* §§ 404.1520(c), 404.1521, and 404.1523), we will consider you unable to do lighter work, and therefore, disabled.

Example to paragraph (a): B is a 58-year-old miner's helper with a fourth grade education who has a lifelong history of unskilled arduous physical labor. B says that he is disabled because of arthritis of the spine, hips, and knees, and other impairments. Medical evidence shows a ''severe'' combination of impairments that prevents B from performing his past relevant work. Under these circumstances, we will find that B is disabled.

(b) *If you are at least 55 years old, have no more than a limited education, and*

have no past relevant work experience. If you have a severe, medically determinable impairment(s) (*see* §§ 404.1520(c), 404.1521, and 404.1523), are of advanced age (age 55 or older, *see* § 404.1563), have a limited education or less (*see* § 404.1564), and have no past relevant work experience (*see* § 404.1565), we will find you disabled. If the evidence shows that you meet this profile, we will not need to assess your residual functional capacity or consider the rules in appendix 2 to this subpart.

[68 FR 51163, Aug. 26, 2003]

§ 404.1563 Your age as a vocational factor.

(a) *General.* ''Age'' means your chronological age. When we decide whether you are disabled under § 404.1520(g)(1), we will consider your chronological age in combination with your residual functional capacity, education, and work experience. We will not consider your ability to adjust to other work on the basis of your age alone. In determining the extent to which age affects a person's ability to adjust to other work, we consider advancing age to be an increasingly limiting factor in the person's ability to make such an adjustment, as we explain in paragraphs (c) through (e) of this section. If you are unemployed but you still have the ability to adjust to other work, we will find that you are not disabled. In paragraphs (b) through (e) of this section and in appendix 2 to this subpart, we explain in more detail how we consider your age as a vocational factor.

(b) *How we apply the age categories.* When we make a finding about your ability to do other work under § 404.1520(f)(1), we will use the age categories in paragraphs (c) through (e) of this section. We will use each of the age categories that applies to you during the period for which we must determine if you are disabled. We will not apply the age categories mechanically in a borderline situation. If you are within a few days to a few months of reaching an older age category, and using the older age category would result in a determination or decision that you are disabled, we will consider whether to use the older age category after evaluating the overall impact of all the factors of your case.

(c) *Younger person.* If you are a younger person (under age 50), we generally do not consider that your age will seriously affect your ability to adjust to other work. However, in some circumstances, we consider that persons age 45–49 are more limited in their ability to adjust to other work than persons who have not attained age 45. See Rule 201.17 in appendix 2.

(d) *Person closely approaching advanced age.* If you are closely approaching advanced age (age 50–54), we will consider that your age along with a severe impairment(s) and limited work experience may seriously affect your ability to adjust to other work.

(e) *Person of advanced age.* We consider that at advanced age (age 55 or older), age significantly affects a person's ability to adjust to other work. We have special rules for persons of advanced age and for persons in this category who are closely approaching retirement age (age 60 or older). See § 404.1568(d)(4).

(f) *Information about your age.* We will usually not ask you to prove your age. However, if we need to know your exact age to determine whether you get disability benefits or if the amount of your benefit will be affected, we will ask you for evidence of your age.

[45 FR 55584, Aug. 20, 1980, as amended at 65 FR 18000, Apr. 6, 2000; 68 FR 51163, Aug. 26, 2003; 73 FR 64196, Oct. 29, 2008]

§ 404.1564 Your education as a vocational factor.

(a) *General. Education* is primarily used to mean formal schooling or other training which contributes to your ability to meet vocational requirements, for example, reasoning ability, communication skills, and arithmetical ability. However, if you do not have formal schooling, this does not necessarily mean that you are uneducated or lack these abilities. Past work experience and the kinds of responsibilities you had when you were working may show that you have intellectual abilities, although you may have little formal education. Your daily activities, hobbies, or the results of testing may also show that you have

significant intellectual ability that can be used to work.

(b) *How we evaluate your education.* The importance of your educational background may depend upon how much time has passed between the completion of your formal education and the beginning of your physical or mental impairment(s) and by what you have done with your education in a work or other setting. Formal education that you completed many years before your impairment began, or unused skills and knowledge that were a part of your formal education, may no longer be useful or meaningful in terms of your ability to work. Therefore, the numerical grade level that you completed in school may not represent your actual educational abilities. These may be higher or lower. However, if there is no other evidence to contradict it, we will use your numerical grade level to determine your educational abilities. The term *education* also includes how well you are able to communicate in English since this ability is often acquired or improved by education. In evaluating your educational level, we use the following categories:

(1) *Illiteracy.* Illiteracy means the inability to read or write. We consider someone illiterate if the person cannot read or write a simple message such as instructions or inventory lists even though the person can sign his or her name. Generally, an illiterate person has had little or no formal schooling.

(2) *Marginal education.* Marginal education means ability in reasoning, arithmetic, and language skills which are needed to do simple, unskilled types of jobs. We generally consider that formal schooling at a 6th grade level or less is a marginal education.

(3) *Limited education.* Limited education means ability in reasoning, arithmetic, and language skills, but not enough to allow a person with these educational qualifications to do most of the more complex job duties needed in semi-skilled or skilled jobs. We generally consider that a 7th grade through the 11th grade level of formal education is a limited education.

(4) *High school education and above.* High school education and above means abilities in reasoning, arithmetic, and language skills acquired through formal schooling at a 12th grade level or above. We generally consider that someone with these educational abilities can do semi-skilled through skilled work.

(5) *Inability to communicate in English.* Since the ability to speak, read and understand English is generally learned or increased at school, we may consider this an educational factor. Because English is the dominant language of the country, it may be difficult for someone who doesn't speak and understand English to do a job, regardless of the amount of education the person may have in another language. Therefore, we consider a person's ability to communicate in English when we evaluate what work, if any, he or she can do. It generally doesn't matter what other language a person may be fluent in.

(6) *Information about your education.* We will ask you how long you attended school and whether you are able to speak, understand, read and write in English and do at least simple calculations in arithmetic. We will also consider other information about how much formal or informal education you may have had through your previous work, community projects, hobbies, and any other activities which might help you to work.

§ 404.1565 Your work experience as a vocational factor.

(a) *General. Work experience* means skills and abilities you have acquired through work you have done which show the type of work you may be expected to do. Work you have already been able to do shows the kind of work that you may be expected to do. We consider that your work experience applies when it was done within the last 15 years, lasted long enough for you to learn to do it, and was substantial gainful activity. We do not usually consider that work you did 15 years or more before the time we are deciding whether you are disabled (or when the disability insured status requirement was last met, if earlier) applies. A gradual change occurs in most jobs so that after 15 years it is no longer realistic to expect that skills and abilities acquired in a job done then continue to

apply. The 15-year guide is intended to insure that remote work experience is not currently applied. If you have no work experience or worked only ''off-and-on'' or for brief periods of time during the 15-year period, we generally consider that these do not apply. If you have acquired skills through your past work, we consider you to have these work skills unless you cannot use them in other skilled or semi-skilled work that you can now do. If you cannot use your skills in other skilled or semi-skilled work, we will consider your work background the same as unskilled. However, even if you have no work experience, we may consider that you are able to do unskilled work because it requires little or no judgment and can be learned in a short period of time.

(b) *Information about your work.* Under certain circumstances, we will ask you about the work you have done in the past. If you cannot give us all of the information we need, we may try, with your permission, to get it from your employer or other person who knows about your work, such as a member of your family or a co-worker. When we need to consider your work experience to decide whether you are able to do work that is different from what you have done in the past, we will ask you to tell us about all of the jobs you have had in the last 15 years. You must tell us the dates you worked, all of the duties you did, and any tools, machinery, and equipment you used. We will need to know about the amount of walking, standing, sitting, lifting and carrying you did during the work day, as well as any other physical or mental duties of your job. If all of your work in the past 15 years has been arduous and unskilled, and you have very little education, we will ask you to tell us about all of your work from the time you first began working. This information could help you to get disability benefits.

[45 FR 55584, Aug. 20, 1980, as amended at 77 FR 43494, July 25, 2012]

§ 404.1566 Work which exists in the national economy.

(a) *General.* We consider that work exists in the national economy when it exists in significant numbers either in the region where you live or in several other regions of the country. It does not matter whether—

(1) Work exists in the immediate area in which you live;

(2) A specific job vacancy exists for you; or

(3) You would be hired if you applied for work.

(b) *How we determine the existence of work.* Work exists in the national economy when there is a significant number of jobs (in one or more occupations) having requirements which you are able to meet with your physical or mental abilities and vocational qualifications. Isolated jobs that exist only in very limited numbers in relatively few locations outside of the region where you live are not considered ''work which exists in the national economy''. We will not deny you disability benefits on the basis of the existence of these kinds of jobs. If work that you can do does not exist in the national economy, we will determine that you are disabled. However, if work that you can do does exist in the national economy, we will determine that you are not disabled.

(c) *Inability to obtain work.* We will determine that you are not disabled if your residual functional capacity and vocational abilities make it possible for you to do work which exists in the national economy, but you remain unemployed because of—

(1) Your inability to get work;

(2) Lack of work in your local area;

(3) The hiring practices of employers;

(4) Technological changes in the industry in which you have worked;

(5) Cyclical economic conditions;

(6) No job openings for you;

(7) You would not actually be hired to do work you could otherwise do; or

(8) You do not wish to do a particular type of work.

(d) *Administrative notice of job data.* When we determine that unskilled, sedentary, light, and medium jobs exist in the national economy (in significant numbers either in the region where you live or in several regions of the country), we will take administrative notice of reliable job information available from various governmental and other publications. For example, we will take notice of—

(1) *Dictionary of Occupational Titles*, published by the Department of Labor;

(2) *County Business Patterns*, published by the Bureau of the Census;

(3) *Census Reports*, also published by the Bureau of the Census;

(4) *Occupational Analyses*, prepared for the Social Security Administration by various State employment agencies; and

(5) *Occupational Outlook Handbook*, published by the Bureau of Labor Statistics.

(e) *Use of vocational experts and other specialists*. If the issue in determining whether you are disabled is whether your work skills can be used in other work and the specific occupations in which they can be used, or there is a similarly complex issue, we may use the services of a vocational expert or other specialist. We will decide whether to use a vocational expert or other specialist.

§ 404.1567 Physical exertion requirements.

To determine the physical exertion requirements of work in the national economy, we classify jobs as *sedentary*, *light*, *medium*, *heavy*, and *very heavy*. These terms have the same meaning as they have in the *Dictionary of Occupational Titles*, published by the Department of Labor. In making disability determinations under this subpart, we use the following definitions:

(a) *Sedentary work*. Sedentary work involves lifting no more than 10 pounds at a time and occasionally lifting or carrying articles like docket files, ledgers, and small tools. Although a sedentary job is defined as one which involves sitting, a certain amount of walking and standing is often necessary in carrying out job duties. Jobs are sedentary if walking and standing are required occasionally and other sedentary criteria are met.

(b) *Light work*. Light work involves lifting no more than 20 pounds at a time with frequent lifting or carrying of objects weighing up to 10 pounds. Even though the weight lifted may be very little, a job is in this category when it requires a good deal of walking or standing, or when it involves sitting most of the time with some pushing and pulling of arm or leg controls. To be considered capable of performing a full or wide range of light work, you must have the ability to do substantially all of these activities. If someone can do light work, we determine that he or she can also do sedentary work, unless there are additional limiting factors such as loss of fine dexterity or inability to sit for long periods of time.

(c) *Medium work*. Medium work involves lifting no more than 50 pounds at a time with frequent lifting or carrying of objects weighing up to 25 pounds. If someone can do medium work, we determine that he or she can also do sedentary and light work.

(d) *Heavy work*. Heavy work involves lifting no more than 100 pounds at a time with frequent lifting or carrying of objects weighing up to 50 pounds. If someone can do heavy work, we determine that he or she can also do medium, light, and sedentary work.

(e) *Very heavy work*. Very heavy work involves lifting objects weighing more than 100 pounds at a time with frequent lifting or carrying of objects weighing 50 pounds or more. If someone can do very heavy work, we determine that he or she can also do heavy, medium, light and sedentary work.

§ 404.1568 Skill requirements.

In order to evaluate your skills and to help determine the existence in the national economy of work you are able to do, occupations are classified as unskilled, semi-skilled, and skilled. In classifying these occupations, we use materials published by the Department of Labor. When we make disability determinations under this subpart, we use the following definitions:

(a) *Unskilled work*. Unskilled work is work which needs little or no judgment to do simple duties that can be learned on the job in a short period of time. The job may or may not require considerable strength. For example, we consider jobs unskilled if the primary work duties are handling, feeding and offbearing (that is, placing or removing materials from machines which are automatic or operated by others), or machine tending, and a person can usually learn to do the job in 30 days, and little specific vocational preparation and judgment are needed. A person

does not gain work skills by doing unskilled jobs.

(b) *Semi-skilled work*. Semi-skilled work is work which needs some skills but does not require doing the more complex work duties. Semi-skilled jobs may require alertness and close attention to watching machine processes; or inspecting, testing or otherwise looking for irregularities; or tending or guarding equipment, property, materials, or persons against loss, damage or injury; or other types of activities which are similarly less complex than skilled work, but more complex than unskilled work. A job may be classified as semi-skilled where coordination and dexterity are necessary, as when hands or feet must be moved quickly to do repetitive tasks.

(c) *Skilled work*. Skilled work requires qualifications in which a person uses judgment to determine the machine and manual operations to be performed in order to obtain the proper form, quality, or quantity of material to be produced. Skilled work may require laying out work, estimating quality, determining the suitability and needed quantities of materials, making precise measurements, reading blueprints or other specifications, or making necessary computations or mechanical adjustments to control or regulate the work. Other skilled jobs may require dealing with people, facts, or figures or abstract ideas at a high level of complexity.

(d) *Skills that can be used in other work (transferability)*—(1) *What we mean by transferable skills*. We consider you to have skills that can be used in other jobs, when the skilled or semi-skilled work activities you did in past work can be used to meet the requirements of skilled or semi-skilled work activities of other jobs or kinds of work. This depends largely on the similarity of occupationally significant work activities among different jobs.

(2) *How we determine skills that can be transferred to other jobs*. Transferability is most probable and meaningful among jobs in which—

(i) The same or a lesser degree of skill is required;

(ii) The same or similar tools and machines are used; and

(iii) The same or similar raw materials, products, processes, or services are involved.

(3) *Degrees of transferability*. There are degrees of transferability of skills ranging from very close similarities to remote and incidental similarities among jobs. A complete similarity of all three factors is not necessary for transferability. However, when skills are so specialized or have been acquired in such an isolated vocational setting (like many jobs in mining, agriculture, or fishing) that they are not readily usable in other industries, jobs, and work settings, we consider that they are not transferable.

(4) *Transferability of skills for persons of advanced age*. If you are of advanced age (age 55 or older), and you have a severe impairment(s) that limits you to *sedentary* or *light work*, we will find that you cannot make an adjustment to other work unless you have skills that you can transfer to other skilled or semiskilled work (or you have recently completed education which provides for direct entry into skilled work) that you can do despite your impairment(s). We will decide if you have transferable skills as follows. If you are of advanced age and you have a severe impairment(s) that limits you to no more than *sedentary* work, we will find that you have skills that are transferable to skilled or semiskilled sedentary work only if the sedentary work is so similar to your previous work that you would need to make very little, if any, vocational adjustment in terms of tools, work processes, work settings, or the industry. (See § 404.1567(a) and § 201.00(f) of appendix 2.) If you are of advanced age but have not attained age 60, and you have a severe impairment(s) that limits you to no more than *light* work, we will apply the rules in paragraphs (d)(1) through (d)(3) of this section to decide if you have skills that are transferable to skilled or semiskilled light work (see § 404.1567(b)). If you are *closely approaching retirement age* (age 60 or older) and you have a severe impairment(s) that limits you to no more than *light* work, we will find that you have skills that are transferable to skilled or semiskilled light work only if the light work is so similar to your

previous work that you would need to make very little, if any, vocational adjustment in terms of tools, work processes, work settings, or the industry. (See § 404.1567(b) and Rule 202.00(f) of appendix 2 to this subpart.)

[45 FR 55584, Aug. 20, 1980, as amended at 65 FR 18000, Apr. 6, 2000; 73 FR 64197, Oct. 29, 2008]

§ 404.1569 Listing of Medical-Vocational Guidelines in appendix 2.

The Dictionary of Occupational Titles includes information about jobs (classified by their exertional and skill requirements) that exist in the national economy. Appendix 2 provides rules using this data reflecting major functional and vocational patterns. We apply these rules in cases where a person is not doing substantial gainful activity and is prevented by a severe medically determinable impairment from doing vocationally relevant past work. (*See* § 404.1520(h) for an exception to this rule.) The rules in appendix 2 do not cover all possible variations of factors. Also, as we explain in § 200.00 of appendix 2, we do not apply these rules if one of the findings of fact about the person's vocational factors and residual functional capacity is not the same as the corresponding criterion of a rule. In these instances, we give full consideration to all relevant facts in accordance with the definitions and discussions under vocational considerations. However, if the findings of fact made about all factors are the same as the rule, we use that rule to decide whether a person is disabled.

[45 FR 55584, Aug. 20, 1980, as amended at 77 FR 43494, July 25, 2012]

§ 404.1569a Exertional and nonexertional limitations.

(a) *General.* Your impairment(s) and related symptoms, such as pain, may cause limitations of function or restrictions which limit your ability to meet certain demands of jobs. These limitations may be exertional, nonexertional, or a combination of both. Limitations are classified as exertional if they affect your ability to meet the strength demands of jobs. The classification of a limitation as exertional is related to the United States Department of Labor's classification of jobs by various exertional levels (sedentary, light, medium, heavy, and very heavy) in terms of the strength demands for sitting, standing, walking, lifting, carrying, pushing, and pulling. Sections 404.1567 and 404.1569 explain how we use the classification of jobs by exertional levels (strength demands) which is contained in the Dictionary of Occupational Titles published by the Department of Labor, to determine the exertional requirements of work which exists in the national economy. Limitations or restrictions which affect your ability to meet the demands of jobs other than the strength demands, that is, demands other than sitting, standing, walking, lifting, carrying, pushing or pulling, are considered nonexertional. When we decide whether you can do your past relevant work (*see* §§ 404.1520(f) and 404.1594(f)(7)), we will compare our assessment of your residual functional capacity with the demands of your past relevant work. If you cannot do your past relevant work, we will use the same residual functional capacity assessment along with your age, education, and work experience to decide if you can adjust to any other work which exists in the national economy. (*See* §§ 404.1520(g) and 404.1594(f)(8).) Paragraphs (b), (c), and (d) of this section explain how we apply the medical-vocational guidelines in appendix 2 of this subpart in making this determination, depending on whether the limitations or restrictions imposed by your impairment(s) and related symptoms, such as pain, are exertional, nonexertional, or a combination of both.

(b) *Exertional limitations.* When the limitations and restrictions imposed by your impairment(s) and related symptoms, such as pain, affect only your ability to meet the strength demands of jobs (sitting, standing, walking, lifting, carrying, pushing, and pulling), we consider that you have only exertional limitations. When your impairment(s) and related symptoms only impose exertional limitations and your specific vocational profile is listed in a rule contained in appendix 2 of this subpart, we will directly apply that rule to decide whether you are disabled.

(c) *Nonexertional limitations.* (1) When the limitations and restrictions imposed by your impairment(s) and related symptoms, such as pain, affect only your ability to meet the demands of jobs other than the strength demands, we consider that you have only nonexertional limitations or restrictions. Some examples of nonexertional limitations or restrictions include the following:

(i) You have difficulty functioning because you are nervous, anxious, or depressed;

(ii) You have difficulty maintaining attention or concentrating;

(iii) You have difficulty understanding or remembering detailed instructions;

(iv) You have difficulty in seeing or hearing;

(v) You have difficulty tolerating some physical feature(s) of certain work settings, e.g., you cannot tolerate dust or fumes; or

(vi) You have difficulty performing the manipulative or postural functions of some work such as reaching, handling, stooping, climbing, crawling, or crouching.

(2) If your impairment(s) and related symptoms, such as pain, only affect your ability to perform the nonexertional aspects of work-related activities, the rules in appendix 2 do not direct factual conclusions of disabled or not disabled. The determination as to whether disability exists will be based on the principles in the appropriate sections of the regulations, giving consideration to the rules for specific case situations in appendix 2.

(d) *Combined exertional and nonexertional limitations.* When the limitations and restrictions imposed by your impairment(s) and related symptoms, such as pain, affect your ability to meet both the strength and demands of jobs other than the strength demands, we consider that you have a combination of exertional and nonexertional limitations or restrictions. If your impairment(s) and related symptoms, such as pain, affect your ability to meet both the strength and demands of jobs other than the strength demands, we will not directly apply the rules in appendix 2 unless there is a rule that directs a conclusion that you are disabled based upon your strength limitations; otherwise the rules provide a framework to guide our decision.

[56 FR 57943, Nov. 14, 1991, as amended at 68 FR 51163, Aug. 26, 2003]

SUBSTANTIAL GAINFUL ACTIVITY

§ 404.1571 General.

The work, without regard to legality, that you have done during any period in which you believe you are disabled may show that you are able to work at the substantial gainful activity level. If you are able to engage in substantial gainful activity, we will find that you are not disabled. (We explain the rules for persons who are statutorily blind in § 404.1584.) Even if the work you have done was not substantial gainful activity, it may show that you are able to do more work than you actually did. We will consider all of the medical and vocational evidence in your file to decide whether or not you have the ability to engage in substantial gainful activity.

[45 FR 55584, Aug. 20, 1980, as amended at 65 FR 42783, July 11, 2000]

§ 404.1572 What we mean by substantial gainful activity.

Substantial gainful activity is work activity that is both substantial and gainful:

(a) *Substantial work activity.* Substantial work activity is work activity that involves doing significant physical or mental activities. Your work may be substantial even if it is done on a part-time basis or if you do less, get paid less, or have less responsibility than when you worked before.

(b) *Gainful work activity.* Gainful work activity is work activity that you do for pay or profit. Work activity is gainful if it is the kind of work usually done for pay or profit, whether or not a profit is realized.

(c) *Some other activities.* Generally, we do not consider activities like taking care of yourself, household tasks, hobbies, therapy, school attendance, club activities, or social programs to be substantial gainful activity.

§ 404.1573 General information about work activity.

(a) *The nature of your work.* If your duties require use of your experience, skills, supervision and responsibilities, or contribute substantially to the operation of a business, this tends to show that you have the ability to work at the substantial gainful activity level.

(b) *How well you perform.* We consider how well you do your work when we determine whether or not you are doing substantial gainful activity. If you do your work satisfactorily, this may show that you are working at the substantial gainful activity level. If you are unable, because of your impairments, to do ordinary or simple tasks satisfactorily without more supervision or assistance than is usually given other people doing similar work, this may show that you are not working at the substantial gainful activity level. If you are doing work that involves minimal duties that make little or no demands on you and that are of little or no use to your employer, or to the operation of a business if you are self-employed, this does not show that you are working at the substantial gainful activity level.

(c) *If your work is done under special conditions.* The work you are doing may be done under special conditions that take into account your impairment, such as work done in a sheltered workshop or as a patient in a hospital. If your work is done under special conditions, we may find that it does not show that you have the ability to do substantial gainful activity. Also, if you are forced to stop or reduce your work because of the removal of special conditions that were related to your impairment and essential to your work, we may find that your work does not show that you are able to do substantial gainful activity. However, work done under special conditions may show that you have the necessary skills and ability to work at the substantial gainful activity level. Examples of the special conditions that may relate to your impairment include, but are not limited to, situations in which—

(1) You required and received special assistance from other employees in performing your work;

(2) You were allowed to work irregular hours or take frequent rest periods;

(3) You were provided with special equipment or were assigned work especially suited to your impairment;

(4) You were able to work only because of specially arranged circumstances, for example, other persons helped you prepare for or get to and from your work;

(5) You were permitted to work at a lower standard of productivity or efficiency than other employees; or

(6) You were given the opportunity to work despite your impairment because of family relationship, past association with your employer, or your employer's concern for your welfare.

(d) *If you are self-employed.* Supervisory, managerial, advisory or other significant personal services that you perform as a self-employed individual may show that you are able to do substantial gainful activity.

(e) *Time spent in work.* While the time you spend in work is important, we will not decide whether or not you are doing substantial gainful activity only on that basis. We will still evaluate the work to decide whether it is substantial and gainful regardless of whether you spend more time or less time at the job than workers who are not impaired and who are doing similar work as a regular means of their livelihood.

[45 FR 55584, Aug. 20, 1980, as amended at 65 FR 42783, July 11, 2000]

§ 404.1574 Evaluation guides if you are an employee.

(a) We use several guides to decide whether the work you have done shows that you are able to do substantial gainful activity. If you are working or have worked as an employee, we will use the provisions in paragraphs (a) through (d) of this section that are relevant to your work activity. We will use these provisions whenever they are appropriate, whether in connection with your application for disability benefits (when we make an initial determination on your application and throughout any appeals you may request), after you have become entitled to a period of disability or to disability benefits, or both.

(1) *Your earnings may show you have done substantial gainful activity.* Generally, in evaluating your work activity for substantial gainful activity purposes, our primary consideration will be the earnings you derive from the work activity. We will use your earnings to determine whether you have done substantial gainful activity unless we have information from you, your employer, or others that shows that we should not count all of your earnings. The amount of your earnings from work you have done (regardless of whether it is unsheltered or sheltered work) may show that you have engaged in substantial gainful activity. Generally, if you worked for substantial earnings, we will find that you are able to do substantial gainful activity. However, the fact that your earnings were not substantial will not necessarily show that you are not able to do substantial gainful activity. We generally consider work that you are forced to stop or to reduce below the substantial gainful activity level after a short time because of your impairment to be an unsuccessful work attempt. Your earnings from an unsuccessful work attempt will not show that you are able to do substantial gainful activity. We will use the criteria in paragraph (c) of this section to determine if the work you did was an unsuccessful work attempt.

(2) *We consider only the amounts you earn.* When we decide whether your earnings show that you have done substantial gainful activity, we do not consider any income that is not directly related to your productivity. When your earnings exceed the reasonable value of the work you perform, we consider only that part of your pay which you actually earn. If your earnings are being subsidized, we do not consider the amount of the subsidy when we determine if your earnings show that you have done substantial gainful activity. We consider your work to be subsidized if the true value of your work, when compared with the same or similar work done by unimpaired persons, is less than the actual amount of earnings paid to you for your work. For example, when a person with a serious impairment does simple tasks under close and continuous supervision, our determination of whether that person has done substantial gainful activity will not be based only on the amount of the wages paid. We will first determine whether the person received a subsidy; that is, we will determine whether the person was being paid more than the reasonable value of the actual services performed. We will then subtract the value of the subsidy from the person's gross earnings to determine the earnings we will use to determine if he or she has done substantial gainful activity.

(3) *If you are working in a sheltered or special environment.* If you are working in a sheltered workshop, you may or may not be earning the amounts you are being paid. The fact that the sheltered workshop or similar facility is operating at a loss or is receiving some charitable contributions or governmental aid does not establish that you are not earning all you are being paid. Since persons in military service being treated for severe impairments usually continue to receive full pay, we evaluate work activity in a therapy program or while on limited duty by comparing it with similar work in the civilian work force or on the basis of reasonable worth of the work, rather than on the actual amount of the earnings.

(b) *Earnings guidelines*—(1) *General.* If you are an employee, we first consider the criteria in paragraph (a) of this section and §404.1576, and then the guides in paragraphs (b)(2) and (3) of this section. When we review your earnings to determine if you have been performing substantial gainful activity, we will subtract the value of any subsidized earnings (see paragraph (a)(2) of this section) and the reasonable cost of any impairment-related work expenses from your gross earnings (see §404.1576). The resulting amount is the amount we use to determine if you have done substantial gainful activity. We will generally average your earnings for comparison with the earnings guidelines in paragraphs (b)(2) and (3) of this section. See §404.1574a for our rules on averaging earnings.

(2) *Earnings that will ordinarily show that you have engaged in substantial gainful activity.* We will consider that your earnings from your work activity as an employee (including earnings

from work in a sheltered workshop or a comparable facility especially set up for severely impaired persons) show that you engaged in substantial gainful activity if:

(i) *Before January 1, 2001*, they averaged more than the amount(s) in Table 1 of this section for the time(s) in which you worked.

(ii) *Beginning January 1,* 2001, and each year thereafter, they average more than the larger of:

(A) The amount for the previous year, or

(B) An amount adjusted for national wage growth, calculated by multiplying $700 by the ratio of the national average wage index for the year 2 calendar years before the year for which the amount is being calculated to the national average wage index for the year 1998. We will then round the resulting amount to the next higher multiple of $10 where such amount is a multiple of $5 but not of $10 and to the nearest multiple of $10 in any other case.

TABLE 1

For months:	Your monthly earnings averaged more than:
In calendar years before 1976	$200
In calendar year 1976	230
In calendar year 1977	240
In calendar year 1978	260
In calendar year 1979	280
In calendar years 1980–1989	300
January 1990–June 1999	500
July 1999–December 2000	700

(3) *Earnings that will ordinarily show that you have not engaged in substantial gainful activity*—(i) *General.* If your average monthly earnings are equal to or less than the amount(s) determined under paragraph (b)(2) of this section for the year(s) in which you work, we will generally consider that the earnings from your work as an employee (including earnings from work in a sheltered workshop or comparable facility) will show that you have not engaged in substantial gainful activity. We will generally not consider other information in addition to your earnings except in the circumstances described in paragraph (b)(3)(ii) of this section.

(ii) *When we will consider other information in addition to your earnings.* We will generally consider other information in addition to your earnings if there is evidence indicating that you may be engaging in substantial gainful activity or that you are in a position to control when earnings are paid to you or the amount of wages paid to you (for example, if you are working for a small corporation owned by a relative). (See paragraph (b)(3)(iii) of this section for when we do not apply this rule.) Examples of other information we may consider include, whether—

(A) Your work is comparable to that of unimpaired people in your community who are doing the same or similar occupations as their means of livelihood, taking into account the time, energy, skill, and responsibility involved in the work; and

(B) Your work, although significantly less than that done by unimpaired people, is clearly worth the amounts shown in paragraph (b)(2) of this section, according to pay scales in your community.

(iii) *Special rule for considering earnings alone when evaluating the work you do after you have received social security disability benefits for at least 24 months.* Notwithstanding paragraph (b)(3)(ii) of this section, we will not consider other information in addition to your earnings to evaluate the work you are doing or have done if—

(A) At the time you do the work, you are entitled to social security disability benefits and you have received such benefits for at least 24 months (see paragraph (b)(3)(iv) of this section); and

(B) We are evaluating that work to consider whether you have engaged in substantial gainful activity or demonstrated the ability to engage in substantial gainful activity for the purpose of determining whether your disability has ceased because of your work activity (see §§ 404.1592a(a)(1) and (3)(ii) and 404.1594(d)(5) and (f)(1)).

(iv) *When we consider you to have received social security disability benefits for at least 24 months.* For purposes of paragraph (b)(3)(iii) of this section, social security disability benefits means

disability insurance benefits for a disabled worker, child's insurance benefits based on disability, or widow's or widower's insurance benefits based on disability. We consider you to have received such benefits for at least 24 months beginning with the first day of the first month following the 24th month for which you actually received social security disability benefits that you were due or constructively received such benefits. The 24 months do not have to be consecutive. We will consider you to have constructively received a benefit for a month for purposes of the 24-month requirement if you were otherwise due a social security disability benefit for that month and your monthly benefit was withheld to recover an overpayment. Any months for which you were entitled to benefits but for which you did not actually or constructively receive a benefit payment will not be counted for the 24-month requirement. If you also receive supplemental security income payments based on disability or blindness under title XVI of the Social Security Act, months for which you received only supplemental security income payments will not be counted for the 24-month requirement.

(c) *The unsuccessful work attempt*—(1) *General*. Ordinarily, work you have done will not show that you are able to do substantial gainful activity if, after working for a period of 6 months or less, your impairment forced you to stop working or to reduce the amount of work you do so that your earnings from such work fall below the substantial gainful activity earnings level in paragraph (b)(2) of this section, and you meet the conditions described in paragraphs (c)(2), (3), (4), and (5), of this section. We will use the provisions of this paragraph when we make an initial determination on your application for disability benefits and throughout any appeal you may request. Except as set forth in §404.1592a(a), we will also apply the provisions of this paragraph if you are already entitled to disability benefits, when you work and we consider whether the work you are doing is substantial gainful activity or demonstrates the ability to do substantial gainful activity.

(2) *Event that must precede an unsuccessful work attempt*. There must be a significant break in the continuity of your work before we will consider that you began a work attempt that later proved unsuccessful. You must have stopped working or reduced your work and earnings below the substantial gainful activity earnings level because of your impairment or because of the removal of special conditions that were essential to the further performance of your work. We explain what we mean by special conditions in §404.1573(c). We will consider your prior work to be ''discontinued'' for a significant period if you were out of work at least 30 consecutive days. We will also consider your prior work to be ''discontinued'' if, because of your impairment, you were forced to change to another type of work or another employer.

(3) *If you worked 3 months or less*. We will consider work of 3 months or less to be an unsuccessful work attempt if you stopped working, or you reduced your work and earnings below the substantial gainful activity earnings level, because of your impairment or because of the removal of special conditions which took into account your impairment and permitted you to work.

(4) *If you worked between 3 and 6 months*. We will consider work that lasted longer than 3 months to be an unsuccessful work attempt if it ended, or was reduced below substantial gainful activity earnings level, within 6 months because of your impairment or because of the removal of special conditions which took into account your impairment and permitted you to work and—

(i) You were frequently absent from work because of your impairment;

(ii) Your work was unsatisfactory because of your impairment;

(iii) You worked during a period of temporary remission of your impairment; or

(iv) You worked under special conditions that were essential to your performance and these conditions were removed.

(5) *If you worked more than 6 months*. We will not consider work you performed at the substantial gainful activity earnings level for more than 6

months to be an unsuccessful work attempt regardless of why it ended or was reduced below the substantial gainful activity earnings level.

(d) *Work activity in certain volunteer programs.* If you work as a volunteer in certain programs administered by the Federal government under the Domestic Volunteer Service Act of 1973 or the Small Business Act, we will not count any payments you receive from these programs as earnings when we determine whether you are engaging in substantial gainful activity. These payments may include a minimal stipend, payments for supportive services such as housing, supplies and equipment, an expense allowance, or reimbursement of out-of-pocket expenses. We will also disregard the services you perform as a volunteer in applying any of the substantial gainful activity tests discussed in paragraph (b)(6) of this section. This exclusion from the substantial gainful activity provisions will apply only if you are a volunteer in a program explicitly mentioned in the Domestic Volunteer Service Act of 1973 or the Small Business Act. Programs explicitly mentioned in those Acts include Volunteers in Service to America, University Year for ACTION, Special Volunteer Programs, Retired Senior Volunteer Program, Foster Grandparent Program, Service Corps of Retired Executives, and Active Corps of Executives. We will not exclude under this paragraph, volunteer work you perform in other programs or any nonvolunteer work you may perform, including nonvolunteer work under one of the specified programs. For civilians in certain government-sponsored job training and employment programs, we evaluate the work activity on a case-by-case basis under the substantial gainful activity earnings test. In programs such as these, subsidies often occur. We will subtract the value of any subsidy and use the remainder to determine if you have done substantial gainful activity. See paragraphs (a)(2)-(3) of this section.

(e) *Work activity as a member or consultant of an advisory committee established under the Federal Advisory Committee Act (FACA), 5 U.S.C. App. 2.* If you are serving as a member or consultant of an advisory committee, board, commission, council, or similar group established under FACA, we will not count any payments you receive from serving on such committees as earnings when we determine whether you are engaging in substantial gainful activity. These payments may include compensation, travel expenses, and special assistance. We also will exclude the services you perform as a member or consultant of an advisory committee established under FACA in applying any of the substantial gainful activity tests discussed in paragraph (b)(6) of this section. This exclusion from the substantial gainful activity provisions will apply only if you are a member or consultant of an advisory committee specifically authorized by statute, or by the President, or determined as a matter of formal record by the head of a federal government agency. This exclusion from the substantial gainful activity provisions will not apply if your service as a member or consultant of an advisory committee is part of your duties or is required as an employee of any governmental or non-governmental organization, agency, or business.

[46 FR 4869, Jan. 19, 1981, as amended at 48 FR 21936, May 16, 1983; 49 FR 22272, May 29, 1984; 54 FR 53605, Dec. 29, 1989; 64 FR 18570, Apr. 15, 1999; 64 FR 22903, Apr. 28, 1999; 65 FR 42783, July 11, 2000; 65 FR 82910, Dec. 29, 2000; 71 FR 3219, Jan. 20, 2006; 71 FR 66853, Nov. 17, 2006]

§ 404.1574a When and how we will average your earnings.

(a) If your work as an employee or as a self-employed person was continuous without significant change in work patterns or earnings, and there has been no change in the substantial gainful activity earnings levels, we will average your earnings over the entire period of work requiring evaluation to determine if you have done substantial gainful activity. See § 404.1592a for information on the reentitlement period.

(b) If you work over a period of time during which the substantial gainful activity earnings levels change, we will average your earnings separately for each period in which a different substantial gainful activity earnings level applies.

(c) If there is a significant change in your work pattern or earnings during

the period of work requiring evaluation, we will average your earnings over each separate period of work to determine if any of your work efforts were substantial gainful activity.

(d) We will not average your earnings in determining whether benefits should be paid for any month(s) during or after the reentitlement period that occurs after the month disability has been determined to have ceased because of the performance of substantial gainful activity. See § 404.1592a for information on the reentitlement period. The following examples illustrate what we mean by a significant change in the work pattern of an employee and when we will average and will not average earnings.

Example 1: Mrs. H. began receiving disability insurance benefits in March 1993. In January 1995 she began selling magazines by telephone solicitation, expending a minimum of time, for which she received $225 monthly. As a result, Mrs. H. used up her trial work period during the months of January 1995 through September 1995. After the trial work period ended, we determined that Mrs. H. had not engaged in substantial gainful activity during her trial work period. Her reentitlement period began October 1995. In December 1995, Mrs. H. discontinued her telephone solicitation work to take a course in secretarial skills. In January 1997, she began work as a part-time temporary secretary in a banking firm. Mrs. H. worked 20 hours a week, without any subsidy or impairment-related work expenses, at beginner rates. She earned $285 per month in January 1997 and February 1997. In March 1997 she had increased her secretarial skills to journeyman level and was assigned as a part-time private secretary to one of the vice presidents of the banking firm. Mrs. H.'s earnings increased to $525 per month effective March 1997. We determined that Mrs. H. was engaging in substantial gainful activity beginning March 1997 and that her disability ceased that month, the first month of substantial gainful activity after the end of the trial work period. Mrs. H. is due payment for March 1997, the month of cessation, and the following 2 months (April 1997 and May 1997) because disability benefits terminate the third month following the earliest month in which she performed substantial gainful activity. We did not average earnings for the period January 1997 and February 1997 with the period beginning March 1997 because there was a significant change in earnings and work activity beginning March 1997. Thus, the earnings of January 1997 and February 1997 could not be averaged with those of March 1997 to reduce March 1997 earnings below the substantial gainful activity level. After we determine that Mrs. H.'s disability had ceased because of her performance of substantial gainful activity, we cannot average her earnings to determine whether she is due payment for any month during or after the reentitlement period. Beginning June 1997, the third month following the cessation month, we would evaluate all of Mrs. H.'s work activity on a month-by-month basis (see § 404.1592a(a)).

Example 2: Ms. M. began receiving disability insurance benefits in March 1992. In January 1995, she began selling cable television subscriptions by telephone solicitation, expending a minimum of time, for which she received $275 monthly. Ms. M. did not work in June 1995, and she resumed selling cable television subscriptions beginning July 1995. In this way, Ms. M. used up her 9-month trial work period during the months of January 1995 through May 1995 and July 1995 through October 1995. After Ms. M.'s trial work period ended, we determined that she had not engaged in substantial gainful activity during her trial work period. Ms. M.'s reentitlement period began November 1995. In December 1995, Ms. M. discontinued her telephone solicitation work to take a course in secretarial skills. In January 1997, she began work as a part-time temporary secretary in an accounting firm. Ms. M. worked, without any subsidy or impairment-related work expenses, at beginner rates. She earned $460 in January 1997, $420 in February 1997, and $510 in March 1997. In April 1997, she had increased her secretarial skills to journeyman level, and she was assigned as a part-time private secretary to one of the vice presidents of the firm. Ms. M.'s earnings increased to $860 per month effective April 1997. We determined that Ms. M. was engaging in substantial gainful activity beginning April 1997 and that her disability ceased that month, the first month of substantial gainful activity after the end of the trial work period. She is due payment for April 1997, May 1997 and June 1997, because disability benefits terminate the third month following the earliest month in which she performs substantial gainful activity (the month of cessation). We averaged her earnings for the period January 1997 through March 1997 and determined them to be about $467 per month for that period. We did not average earnings for the period January 1997 through March 1997 with earnings for the period beginning April 1997 because there was a significant change in work activity and earnings beginning April 1997. Therefore, we found that the earnings for January 1997 through March 1997 were under the substantial gainful activity level. After we determine that Ms M.'s disability has ceased because she performed substantial gainful activity, we cannot average her earnings in determining whether she is due payment for any month during or

after the reentitlement period. In this example, beginning July 1997, the third month following the month of cessation, we would evaluate all of Ms. M.'s work activity on a month-by-month basis (see § 404.1592a(a)).

[65 FR 42784, July 11, 2000]

§ 404.1575 Evaluation guides if you are self-employed.

(a) *If you are a self-employed person.* If you are working or have worked as a self-employed person, we will use the provisions in paragraphs (a) through (e) of this section that are relevant to your work activity. We will use these provisions whenever they are appropriate, whether in connection with your application for disability benefits (when we make an initial determination on your application and throughout any appeals you may request), after you have become entitled to a period of disability or to disability benefits, or both.

(1) *How we evaluate the work you do after you have become entitled to disability benefits.* If you are entitled to social security disability benefits and you work as a self-employed person, the way we will evaluate your work activity will depend on whether the work activity occurs before or after you have received such benefits for at least 24 months and on the purpose of the evaluation. For purposes of paragraphs (a) and (e) of this section, social security disability benefits means disability insurance benefits for a disabled worker, child's insurance benefits based on disability, or widow's or widower's insurance benefits based on disability. We will use the rules in paragraph (e)(2) of this section to determine if you have received such benefits for at least 24 months.

(i) We will use the guides in paragraph (a)(2) of this section to evaluate any work activity you do before you have received social security disability benefits for at least 24 months to determine whether you have engaged in substantial gainful activity, regardless of the purpose of the evaluation.

(ii) We will use the guides in paragraph (e) of this section to evaluate any work activity you do after you have received social security disability benefits for at least 24 months to determine whether you have engaged in substantial gainful activity for the purpose of determining whether your disability has ceased because of your work activity.

(iii) If we have determined under § 404.1592a(a)(1) that your disability ceased in a month during the reentitlement period because you performed substantial gainful activity, and we need to decide under § 404.1592a(a)(2)(i) or (a)(3)(i) whether you are doing substantial gainful activity in a subsequent month in or after your reentitlement period, we will use the guides in paragraph (a)(2) of this section (subject to the limitations described in § 404.1592a(a)(2)(i) and (a)(3)(i)) to determine whether your work activity in that month is substantial gainful activity. We will use the guides in paragraph (a)(2) of this section for these purposes, regardless of whether your work activity in that month occurs before or after you have received social security disability benefits for at least 24 months.

(2) *General rules for evaluating your work activity if you are self-employed.* We will consider your activities and their value to your business to decide whether you have engaged in substantial gainful activity if you are self-employed. We will not consider your income alone because the amount of income you actually receive may depend on a number of different factors, such as capital investment and profit-sharing agreements. We will generally consider work that you were forced to stop or reduce to below substantial gainful activity after 6 months or less because of your impairment as an unsuccessful work attempt. See paragraph (d) of this section. We will evaluate your work activity based on the value of your services to the business regardless of whether you receive an immediate income for your services. We determine whether you have engaged in substantial gainful activity by applying three tests. If you have not engaged in substantial gainful activity under test one, then we will consider tests two and three. The tests are as follows:

(i) *Test one:* You have engaged in substantial gainful activity if you render services that are significant to the operation of the business and receive a substantial income from the business.

Paragraphs (b) and (c) of this section explain what we mean by significant services and substantial income for purposes of this test.

(ii) *Test Two:* You have engaged in substantial gainful activity if your work activity, in terms of factors such as hours, skills, energy output, efficiency, duties, and responsibilities, is comparable to that of unimpaired individuals in your community who are in the same or similar businesses as their means of livelihood.

(iii) *Test Three:* You have engaged in substantial gainful activity if your work activity, although not comparable to that of unimpaired individuals, is clearly worth the amount shown in §404.1574(b)(2) when considered in terms of its value to the business, or when compared to the salary that an owner would pay to an employee to do the work you are doing.

(b) *What we mean by significant services.* (1) If you are not a farm landlord and you operate a business entirely by yourself, any services that you render are significant to the business. If your business involves the services of more than one person, we will consider you to be rendering significant services if you contribute more than half the total time required for the management of the business, or you render management services for more than 45 hours a month regardless of the total management time required by the business.

(2) If you are a farm landlord, that is, you rent farm land to another, we will consider you to be rendering significant services if you materially particpate in the production or the management of the production of the things raised on the rented farm. (See §404.1082 of this chapter for an explanation of *material participation.*) If you were given social security earnings credits because you materially participated in the activities of the farm and you continue these same activities, we will consider you to be rendering significant services.

(c) *What we mean by substantial income*—(1) *Determining countable income.* We deduct your normal business expenses from your gross income to determine net income. Once we determine your net income, we deduct the reasonable value of any significant amount of unpaid help furnished by your spouse, children, or others. Miscellaneous duties that ordinarily would not have commercial value would not be considered significant. We deduct impairment-related work expenses that have not already been deducted in determining your net income. Impairment-related work expenses are explained in §404.1576. We deduct unincurred business expenses paid for you by another individual or agency. An unincurred business expense occurs when a sponsoring agency or another person incurs responsibility for the payment of certain business expenses, e.g., rent, utilities, or purchases and repair of equipment, or provides you with equipment, stock, or other material for the operation of your business. We deduct soil bank payments if they were included as farm income. That part of your income remaining after we have made all applicable deductions represents the actual value of work performed. The resulting amount is the amount we use to determine if you have done substantial gainful activity. For purposes of this section, we refer to this amount as your countable income. We will generally average your countable income for comparison with the earnings guidelines in §404.1574(b)(2). See §404.1574a for our rules on averaging of earnings.

(2) *When countable income is considered substantial.* We will consider your countable income to be substantial if—

(i) It averages more than the amounts described in §404.1574(b)(2); or

(ii) It averages less than the amounts described in §404.1574(b)(2) but it is either comparable to what it was before you became seriously impaired if we had not considered your earnings or is comparable to that of unimpaired self-employed persons in your community who are in the same or a similar business as their means of livelihood.

(d) *The unsuccessful work attempt*—(1) *General.* Ordinarily, work you have done will not show that you are able to do substantial gainful activity if, after working for a period of 6 months or less, you were forced by your impairment to stop working or to reduce the amount of work you do so that you are

no longer performing substantial gainful activity and you meet the conditions described in paragraphs (d)(2), (3), (4), and (5) of this section. We will use the provisions of this paragraph when we make an initial determination on your application for disability benefits and throughout any appeal you may request. Except as set forth in § 404.1592a(a), we will also apply the provisions of this paragraph if you are already entitled to disability benefits, when you work and we consider whether the work you are doing is substantial gainful activity or demonstrates the ability to do substantial gainful activity.

(2) *Event that must precede an unsuccessful work attempt.* There must be a significant break in the continuity of your work before we will consider you to have begun a work attempt that later proved unsuccessful. You must have stopped working or reduced your work and earnings below substantial gainful activity because of your impairment or because of the removal of special conditions which took into account your impairment and permitted you to work. Examples of such special conditions may include any significant amount of unpaid help furnished by your spouse, children, or others, or unincurred business expenses, as described in paragraph (c) of this section, paid for you by another individual or agency. We will consider your prior work to be ''discontinued'' for a significant period if you were out of work at least 30 consecutive days. We will also consider your prior work to be ''discontinued'' if, because of your impairment, you were forced to change to another type of work.

(3) *If you worked 3 months or less.* We will consider work of 3 months or less to be an unsuccessful work attempt if it ended, or was reduced below substantial gainful activity, because of your impairment or because of the removal of special conditions which took into account your impairment and permitted you to work.

(4) *If you worked between 3 and 6 months.* We will consider work that lasted longer than 3 months to be an unsuccessful work attempt if it ended, or was reduced below substantial gainful activity, within 6 months because of your impairment or because of the removal of special conditions which took into account your impairment and permitted you to work and—

(i) You were frequently unable to work because of your impairment;

(ii) Your work was unsatisfactory because of your impairment;

(iii) You worked during a period of temporary remission of your impairment; or

(iv) You worked under special conditions that were essential to your performance and these conditions were removed.

(5) *If you worked more than 6 months.* We will not consider work you performed at the substantial gainful activity level for more than 6 months to be an unsuccessful work attempt regardless of why it ended or was reduced below the substantial gainful activity earnings level.

(e) *Special rules for evaluating the work you do after you have received social security disability benefits for at least 24 months*—(1) *General.* We will apply the provisions of this paragraph to evaluate the work you are doing or have done if, at the time you do the work, you are entitled to social security disability benefits and you have received such benefits for at least 24 months. We will apply the provisions of this paragraph only when we are evaluating that work to consider whether you have engaged in substantial gainful activity or demonstrated the ability to engage in substantial gainful activity for the purpose of determining whether your disability has ceased because of your work activity (see §§ 404.1592a(a)(1) and (3)(ii) and 404.1594(d)(5) and (f)(1)). We will use the countable income test described in paragraph (e)(3) of this section to determine whether the work you do after you have received such benefits for at least 24 months is substantial gainful activity or demonstrates the ability to do substantial gainful activity. We will not consider the services you perform in that work to determine that the work you are doing shows that you are able to engage in substantial gainful activity and are, therefore, no longer disabled. However, we may consider the services you perform to determine that you are not doing substantial gainful activity. We

will generally consider work that you were forced to stop or reduce below substantial gainful activity after 6 months or less because of your impairment as an unsuccessful work attempt. See paragraph (d) of this section.

(2) *The 24-month requirement.* For purposes of paragraphs (a)(1) and (e) of this section, we consider you to have received social security disability benefits for at least 24 months beginning with the first day of the first month following the 24th month for which you actually received social security disability benefits that you were due or constructively received such benefits. The 24 months do not have to be consecutive. We will consider you to have constructively received a benefit for a month for purposes of the 24-month requirement if you were otherwise due a social security disability benefit for that month and your monthly benefit was withheld to recover an overpayment. Any months for which you were entitled to benefits but for which you did not actually or constructively receive a benefit payment will not be counted for the 24-month requirement. If you also receive supplemental security income payments based on disability or blindness under title XVI of the Social Security Act, months for which you received only supplemental security income payments will not be counted for the 24-month requirement.

(3) *Countable income test.* We will compare your countable income to the earnings guidelines in § 404.1574(b)(2) to determine if you have engaged in substantial gainful activity. See paragraph (c)(1) of this section for an explanation of countable income. We will consider that you have engaged in substantial gainful activity if your monthly countable income averages more than the amounts described in § 404.1574(b)(2) for the month(s) in which you work, unless the evidence shows that you did not render significant services in the month(s). See paragraph (b) of this section for what we mean by significant services. If your average monthly countable income is equal to or less than the amounts in § 404.1574(b)(2) for the month(s) in which you work, or if the evidence shows that you did not render significant services in the month(s), we will consider that your work as a self-employed person shows that you have not engaged in substantial gainful activity.

[46 FR 4870, Jan. 19, 1981, as amended at 48 FR 21936, May 16, 1983; 49 FR 22272, May 29, 1984; 65 FR 42785, July 11, 2000; 71 FR 66854, Nov. 17, 2006]

§ 404.1576 Impairment-related work expenses.

(a) *General.* When we figure your earnings in deciding if you have done substantial gainful activity, we will subtract the reasonable costs to you of certain items and services which, because of your impairment(s), you need and use to enable you to work. The costs are deductible even though you also need or use the items and services to carry out daily living functions unrelated to your work. Paragraph (b) of this section explains the conditions for deducting work expenses. Paragraph (c) of this section describes the expenses we will deduct. Paragraph (d) of this section explains when expenses may be deducted. Paragraph (e) of this section describes how expenses may be allocated. Paragraph (f) of this section explains the limitations on deducting expenses. Paragraph (g) of this section explains our verification procedures.

(b) *Conditions for deducting impairment-related work expenses.* We will deduct impairment-related work expenses if—

(1) You are otherwise disabled as defined in §§ 404.1505, 404.1577 and 404.1581–404.1583;

(2) The severity of your impairment(s) requires you to purchase (or rent) certain items and services in order to work;

(3) You pay the cost of the item or service. No deduction will be allowed to the extent that payment has been or will be made by another source. No deduction will be allowed to the extent that you have been, could be, or will be reimbursed for such cost by any other source (such as through a private insurance plan, Medicare or Medicaid, or other plan or agency). For example, if you purchase crutches for $80 but you were, could be, or will be reimbursed $64 by some agency, plan, or program, we will deduct only $16;

(4) You pay for the item or service in a month you are working (in accordance with paragraph (d) of this section); and

(5) Your payment is in cash (including checks or other forms of money). Payment in kind is not deductible.

(c) *What expenses may be deducted*—(1) *Payments for attendant care services.* (i) If because of your impairment(s) you need assistance in traveling to and from work, or while at work you need assistance with personal functions (e.g., eating, toileting) or with work-related functions (e.g., reading, communicating), the payments you make for those services may be deducted.

(ii) If because of your impairment(s) you need assistance with personal functions (e.g., dressing, administering medications) at home in preparation for going to and assistance in returning from work, the payments you make for those services may be deducted.

(iii)(A) We will deduct payments you make to a family member for attendant care services only if such person, in order to perform the services, suffers an economic loss by terminating his or her employment or by reducing the number of hours he or she worked.

(B) We consider a family member to be anyone who is related to you by blood, marriage or adoption, whether or not that person lives with you.

(iv) If only part of your payment to a person is for services that come under the provisions of paragraph (c)(1) of this section, we will only deduct that part of the payment which is attributable to those services. For example, an attendant gets you ready for work and helps you in returning from work, which takes about 2 hours a day. The rest of his or her 8 hour day is spent cleaning your house and doing your laundry, etc. We would only deduct one-fourth of the attendant's daily wages as an impairment-related work expense.

(2) *Payments for medical devices.* If your impairment(s) requires that you utilize medical devices in order to work, the payments you make for those devices may be deducted. As used in this subparagraph, medical devices include durable medical equipment which can withstand repeated use, is customarily used for medical purposes, and is generally not useful to a person in the absence of an illness or injury. Examples of durable medical equipment are wheelchairs, hemodialysis equipment, canes, crutches, inhalators and pacemakers.

(3) *Payments for prosthetic devices.* If your impairment(s) requires that you utilize a prosthetic device in order to work, the payments you make for that device may be deducted. A prosthetic device is that which replaces an internal body organ or external body part. Examples of prosthetic devices are artificial replacements of arms, legs and other parts of the body.

(4) *Payments for equipment.* (i) *Work-related equipment.* If your impairment(s) requires that you utilize special equipment in order to do your job, the payments you make for that equipment may be deducted. Examples of work-related equipment are one-hand typewriters, vision aids, sensory aids for the blind, telecommunication devices for the deaf and tools specifically designed to accommodate a person's impairment(s).

(ii) *Residential modifications.* If your impairment(s) requires that you make modifications to your residence, the location of your place of work will determine if the cost of these modifications will be deducted. If you are employed away from home, only the cost of changes made outside of your home to permit you to get to your means of transportation (e.g., the installation of an exterior ramp for a wheelchair confined person or special exterior railings or pathways for someone who requires crutches) will be deducted. Costs relating to modifications of the inside of your home will not be deducted. If you work at home, the costs of modifying the inside of your home in order to create a working space to accommodate your impairment(s) will be deducted to the extent that the changes pertain specifically to the space in which you work. Examples of such changes are the enlargement of a doorway leading into the workspace or modification of the workspace to accommodate problems in dexterity. However, if you are self-employed at home, any cost deducted as a business expense cannot be deducted as an impairment-related work expense.

(iii) *Nonmedical appliances and equipment.* Expenses for appliances and equipment which you do not ordinarily use for medical purposes are generally not deductible. Examples of these items are portable room heaters, air conditioners, humidifiers, dehumidifiers, and electric air cleaners. However, expenses for such items may be deductible when unusual circumstances clearly establish an impairment-related and medically verified need for such an item because it is essential for the control of your disabling condition, thus enabling you to work. To be considered essential, the item must be of such a nature that if it were not available to you there would be an immediate adverse impact on your ability to function in your work activity. In this situation, the expense is deductible whether the item is used at home or in the working place. An example would be the need for an electric air cleaner by an individual with severe respiratory disease who cannot function in a non-purified air environment. An item such as an exercycle is not deductible if used for general physical fitness. If it is prescribed and used as necessary treatment of your impairment and necessary to enable you to work, we will deduct payments you make toward its cost.

(5) *Payments for drugs and medical services.* (i) If you must use drugs or medical services (including diagnostic procedures) to control your impairment(s) the payments you make for them may be deducted. The drugs or services must be prescribed (or utilized) to reduce or eliminate symptoms of your impairment(s) or to slow down its progression. The diagnostic procedures must be performed to ascertain how the impairment(s) is progressing or to determine what type of treatment should be provided for the impairment(s).

(ii) Examples of deductible drugs and medical services are anticonvulsant drugs to control epilepsy or anticonvulsant blood level monitoring; antidepressant medication for mental disorders; medication used to allay the side effects of certain treatments; radiation treatment or chemotherapy for cancer patients; corrective surgery for spinal disorders; electroencephalograms and brain scans related to a disabling epileptic condition; tests to determine the efficacy of medication on a diabetic condition; and immunosuppressive medications that kidney transplant patients regularly take to protect against graft rejection.

(iii) We will only deduct the costs of drugs or services that are directly related to your impairment(s). Examples of non-deductible items are routine annual physical examinations, optician services (unrelated to a disabling visual impairment) and dental examinations.

(6) *Payments for similar items and services*—(i) *General.* If you are required to utilize items and services not specified in paragraphs (c) (1) through (5) of this section but which are directly related to your impairment(s) and which you need to work, their costs are deductible. Examples of such items and services are medical supplies and services not discussed above, the purchase and maintenance of a dog guide which you need to work, and transportation.

(ii) *Medical supplies and services not described above.* We will deduct payments you make for expendable medical supplies, such as incontinence pads, catheters, bandages, elastic stockings, face masks, irrigating kits, and disposable sheets and bags. We will also deduct payments you make for physical therapy which you require because of your impairment(s) and which you need in order to work.

(iii) *Payments for transportation costs.* We will deduct transportation costs in these situations:

(A) Your impairment(s) requires that in order to get to work you need a vehicle that has structural or operational modifications. The modifications must be critical to your operation or use of the vehicle and directly related to your impairment(s). We will deduct the costs of the modifications, but not the cost of the vehicle. We will also deduct a mileage allowance for the trip to and from work. The allowance will be based on data compiled by the Federal Highway Administration relating to vehicle operating costs.

(B) Your impairment(s) requires you to use driver assistance, taxicabs or other hired vehicles in order to work. We will deduct amounts paid to the

driver and, if your own vehicle is used, we will also deduct a mileage allowance, as provided in paragraph (c)(6)(iii)(A) of this section, for the trip to and from work.

(C) Your impairment(s) prevents your taking available public transportation to and from work and you must drive your (unmodified) vehicle to work. If we can verify through your physician or other sources that the need to drive is caused by your impairment(s) (and not due to the unavailability of public transportation), we will deduct a mileage allowance, as provided in paragraph (c)(6)(iii)(A) of this section, for the trip to and from work.

(7) *Payments for installing, maintaining, and repairing deductible items.* If the device, equipment, appliance, etc., that you utilize qualifies as a deductible item as described in paragraphs (c) (2), (3), (4) and (6) of this section, the costs directly related to installing, maintaining and repairing these items are also deductible. (The costs which are associated with modifications to a vehicle are deductible. Except for a mileage allowance, as provided for in paragraph (c)(6)(iii) of this section, the costs which are associated with the vehicle itself are not deductible.)

(d) *When expenses may be deducted*—(1) *Effective date.* To be deductible an expense must be incurred after November 30, 1980. An expense may be considered incurred after that date if it is paid thereafter even though pursuant to a contract or other arrangement entered into before December 1, 1980.

(2) *Payments for services.* A payment you make for services may be deducted if the services are received while you are working and the payment is made in a month you are working. We consider you to be working even though you must leave work temporarily to receive the services.

(3) *Payments for items.* A payment you make toward the cost of a deductible item (regardless of when it is acquired) may be deducted if payment is made in a month you are working. See paragraph (e)(4) of this section when purchases are made in anticipation of work.

(e) *How expenses are allocated*—(1) *Recurring expenses.* You may pay for services on a regular periodic basis, or you may purchase an item on credit and pay for it in regular periodic installments or you may rent an item. If so, each payment you make for the services and each payment you make toward the purchase or rental (including interest) is deductible in the month it is made.

Example: B starts work in October 1981 at which time she purchases a medical device at a cost of $4,800 plus interest charges of $720. Her monthly payments begin in October. She earns and receives $400 a month. The term of the installment contract is 48 months. No downpayment is made. The monthly allowable deduction for the item would be $115 ($5520 divided by 48) for each month of work during the 48 months.

(2) *Nonrecurring expenses.* Part or all of your expenses may not be recurring. For example, you may make a one-time payment in full for an item or service or make a downpayment. If you are working when you make the payment we will either deduct the entire amount in the month you pay it or allocate the amount over a 12 consecutive month period beginning with the month of payment, whichever you select.

Example: A begins working in October 1981 and earns $525 a month. In the same month he purchases and pays for a deductible item at a cost of $250. In this situation we could allow a $250 deduction for October 1981, reducing A's earnings below the SGA level for that month.

If A's earnings had been $15 above the SGA earnings amount, A probably would select the option of projecting the $250 payment over the 12-month period, October 1981–September 1982, giving A an allowable deduction of $20.83 a month for each month of work during that period. This deduction would reduce A's earnings below the SGA level for 12 months.

(3) *Allocating downpayments.* If you make a downpayment we will, if you choose, make a separate calculation for the downpayment in order to provide for uniform monthly deductions. In these situations we will determine the total payment that you will make over a 12 consecutive month period beginning with the month of the downpayment and allocate that amount over the 12 months. Beginning with the 13th month, the regular monthly payment will be deductible. This allocation process will be for a shorter period

if your regular monthly payments will extend over a period of less than 12 months.

Example 1. C starts working in October 1981, at which time he purchases special equipment at a cost of $4,800, paying $1,200 down. The balance of $3,600, plus interest of $540, is to be repaid in 36 installments of $115 a month beginning November 1981. C earns $500 a month. He chooses to have the downpayment allocated. In this situation we would allow a deduction of $205.42 a month for each month of work during the period October 1981 through September 1982. After September 1982, the deduction amount would be the regular monthly payment of $115 for each month of work during the remaining installment period.

Explanation:

Downpayment in 10/81	$1,200	
Monthly payments 11/81 through 09/82	1,265	
	12) 2,465	=$205.42

Example 2. D, while working, buys a deductible item in July 1981, paying $1,450 down. However, his first monthly payment of $125 is not due until September 1981. D chooses to have the downpayment allocated. In this situation we would allow a deduction of $225 a month for each month of work during the period July 1981 through June 1982. After June 1982, the deduction amount would be the regular monthly payment of $125 for each month of work.

Explanation:

Downpayment in 07/81	$1,450	
Monthly payments 09/81 through 06/82	1,250	
	12) 2,700	=$225

(4) *Payments made in anticipation of work.* A payment toward the cost of a deductible item that you made in any of the 11 months preceding the month you started working will be taken into account in determining your impairment-related work expenses. When an item is paid for in full during the 11 months preceding the month you started working the payment will be allocated over the 12-consecutive month period beginning with the month of the payment. However, the only portion of the payment which may be deductible is the portion allocated to the month work begins and the following months. For example, if an item is purchased 3 months before the month work began and is paid for with a one-time payment of $600, the deductible amount would be $450 ($600 divided by 12, multiplied by 9). Installment payments (including a downpayment) that you made for a particular item during the 11 months preceding the month you started working will be totaled and considered to have been made in the month of your first payment for that item within this 11 month period. The sum of these payments will be allocated over the 12-consecutive month period beginning with the month of your first payment (but never earlier than 11 months before the month work began). However, the only portion of the total which may be deductible is the portion allocated to the month work begins and the following months. For example, if an item is purchased 3 months before the month work began and is paid for in 3 monthly installments of $200 each, the total payment of $600 will be considered to have been made in the month of the first payment, that is, 3 months before the month work began. The deductible amount would be $450 ($600 divided by 12, multiplied by 9). The amount, as determined by these formulas, will then be considered to have been paid in the first month of work. We will deduct either this entire amount in the first month of work or allocate it over a 12-consecutive month period beginning with the first month of work, whichever you select. In the above examples, the individual would have the choice of having the entire $450 deducted in the first month of work or of having $37.50 a month ($450 divided by 12) deducted for each month that he works over a 12-consecutive month period, beginning with the first month of work. To be deductible the payments must be for durable items such as medical devices, prostheses, work-related equipment, residential modifications, nonmedical appliances and vehicle modifications. Payments for services and expendable items such as drugs, oxygen, diagnostic procedures, medical supplies and vehicle operating costs are not deductible for purposes of this paragraph.

(f) *Limits on deductions.* (1) We will deduct the actual amounts you pay towards your impairment-related work expenses unless the amounts are unreasonable. With respect to durable medical equipment, prosthetic devices, medical services, and similar medically-related items and services, we

will apply the prevailing charges under Medicare (part B of title XVIII, Health Insurance for the Aged and Disabled) to the extent that this information is readily available. Where the Medicare guides are used, we will consider the amount that you pay to be reasonable if it is no more than the prevailing charge for the same item or service under the Medicare guidelines. If the amount you actually pay is more than the prevailing charge for the same item under the Medicare guidelines, we will deduct from your earnings the amount you paid to the extent you establish that the amount is consistent with the standard or normal charge for the same or similar item or service in your community. For items and services that are not listed in the Medicare guidelines, and for items and services that are listed in the Medicare guidelines but for which such guides cannot be used because the information is not readily available, we will consider the amount you pay to be reasonable if it does not exceed the standard or normal charge for the same or similar item(s) or service(s) in your community.

(2) Impairment-related work expenses are not deducted in computing your earnings for purposes of determining whether your work was ''services'' as described in § 404.1592(b).

(3) The decision as to whether you performed substantial gainful activity in a case involving impairment-related work expenses for items or services necessary for you to work generally will be based upon your ''earnings'' and not on the value of ''services'' you rendered. (See §§ 404.1574(b)(6) (i) and (ii), and 404.1575(a)). This is not necessarily so, however, if you are in a position to control or manipulate your earnings.

(4) The amount of the expenses to be deducted must be determined in a uniform manner in both the disability insurance and SSI programs.

(5) No deduction will be allowed to the extent that any other source has paid or will pay for an item or service. No deduction will be allowed to the extent that you have been, could be, or will be, reimbursed for payments you made. (See paragraph (b)(3) of this section.)

(6) The provisions described in the foregoing paragraphs of this section are effective with respect to expenses incurred on and after December 1, 1980, although expenses incurred after November 1980 as a result of contractual or other arrangements entered into before December 1980, are deductible. For months before December 1980 we will deduct impairment-related work expenses from your earnings only to the extent they exceeded the normal work-related expenses you would have had if you did not have your impairment(s). We will not deduct expenses, however, for those things which you needed even when you were not working.

(g) *Verification*. We will verify your need for items or services for which deductions are claimed, and the amount of the charges for those items or services. You will also be asked to provide proof that you paid for the items or services.

[48 FR 21936, May 16, 1983]

WIDOWS, WIDOWERS, AND SURVIVING DIVORCED SPOUSES

§ 404.1577 Disability defined for widows, widowers, and surviving divorced spouses for monthly benefits payable for months prior to January 1991.

For monthly benefits payable for months prior to January 1991, the law provides that to be entitled to a widow's or widower's benefit as a disabled widow, widower, or surviving divorced spouse, you must have a medically determinable physical or mental impairment which can be expected to result in death or has lasted or can be expected to last for a continuous period of not less than 12 months. The impairment(s) must have been of a level of severity to prevent a person from doing any gainful activity. To determine whether you were disabled, we consider only your physical or mental impairment(s). We do not consider your age, education, and work experience. We also do not consider certain felony-related and prison-related impairments, as explained in § 404.1506. (For monthly benefits payable for months after December 1990, see § 404.1505(a).)

[57 FR 30120, July 8, 1992]

§ 404.1578 How we determine disability for widows, widowers, and surviving divorced spouses for monthly benefits payable for months prior to January 1991.

(a) For monthly benefits payable for months prior to January 1991, we will find that you were disabled and pay you widow's or widower's benefits as a widow, widower, or surviving divorced spouse if—

(1) Your impairment(s) had specific clinical findings that were the same as those for any impairment in the Listing of Impairments in appendix 1 of this subpart or were medically equivalent to those for any impairment shown there;

(2) Your impairment(s) met the duration requirement.

(b) However, even if you met the requirements in paragraphs (a) (1) and (2) of this section, we will not find you disabled if you were doing substantial gainful activity.

[57 FR 30121, July 8, 1992]

§ 404.1579 How we will determine whether your disability continues or ends.

(a) *General.* (1) The rules for determining whether disability continues for widow's or widower's monthly benefits for months after December 1990 are discussed in §§ 404.1594 through 404.1598. The rules for determining whether disability continues for monthly benefits for months prior to January 1991 are discussed in paragraph (a)(2) of this section and paragraphs (b) through (h) of this section.

(2) If you are entitled to disability benefits as a disabled widow, widower, or surviving divorced spouse, and we must decide whether your disability continued or ended for monthly benefits for months prior to January 1991, there are a number of factors we consider in deciding whether your disability continued. We must determine if there has been any medical improvement in your impairment(s) and, if so, whether this medical improvement is related to your ability to work. If your impairment(s) has not so medically improved, we must address whether one or more exceptions applies. If medical improvement related to your ability to work has not occurred and no exception applies, your benefits will continue. Even where medical improvement related to your ability to work has occurred or an exception applies, in most cases (see paragraph (e) of this section for exceptions) before we can find that you are no longer disabled, we must also show that your impairment(s), as shown by current medical evidence, is no longer deemed, under appendix 1 of this subpart, sufficient to preclude you from engaging in gainful activity.

(b) *Terms and definitions.* There are several terms and definitions which are important to know in order to understand how we review your claim to determine whether your disability continues.

(1) *Medical improvement.* Medical improvement is any decrease in the medical severity of your impairment(s) which was present at the time of the most recent favorable medical decision that you were disabled or continued to be disabled. A determination that there has been a decrease in medical severity must be based on changes (improvement) in the symptoms, signs and/or laboratory findings (see § 404.1528) associated with your impairment(s).

Example 1: You were awarded disability benefits due to a herniated nucleus pulposus which was determined to equal the level of severity contemplated by Listing 1.05.C. At the time of our prior favorable decision, you had had a laminectomy. Postoperatively, a myelogram still showed evidence of a persistent deficit in your lumbar spine. You had pain in your back, and pain and a burning sensation in your right foot and leg. There were no muscle weakness or neurological changes and a modest decrease in motion in your back and leg. When we reviewed your claim your treating physician reported that he had seen you regularly every 2 to 3 months for the past 2 years. No further myelograms had been done, complaints of pain in the back and right leg continued especially on sitting or standing for more than a short period of time. Your doctor further reported a moderately decreased range of motion in your back and right leg, but again no muscle atrophy or neurological changes were reported. Medical improvement has *not* occurred because there has been no decrease in the severity of your back impairment as shown by changes in symptoms, signs, or laboratory findings.

Example 2: You were awarded disability benefits due to rheumatoid arthritis of a severity as described in Listing 1.02 of appendix 1 of this subpart. At the time, laboratory findings were positive for this condition. Your doctor reported persistent swelling and tenderness of your fingers and wrists and that you complained of joint pain. Current medical evidence shows that while laboratory tests are still positive for rheumatoid arthritis, your impairment has responded favorably to therapy so that for the last year your fingers and wrists have not been significantly swollen or painful. Medical improvement has occurred because there has been a decrease in the severity of your impairment as documented by the current symptoms and signs reported by your physician. Although your impairment is subject to temporary remissions and exacerbations the improvement that has occurred has been sustained long enough to permit a finding of medical improvement. We would then determine if this medical improvement is related to your ability to work.

(2) *Determining whether medical improvement is related to your ability to work.* If medical improvement has occurred and the severity of the prior impairment(s) no longer meets or equals the listing section which was used in making our most recent favorable decision, we will find that the medical improvement was related to your ability to work. We make this finding because the criteria in appendix 1 of this subpart are related to ability to work because they reflect impairments which are considered severe enough to prevent a person from doing any gainful work. We must, of course, also establish that, considering all of your current impairments not just those which existed at the time of the most recent prior favorable medical decision, your condition does not meet or equal the requirements of appendix 1 before we could find that your disability has ended. If there has been any medical improvement in your impairment(s), but it is not related to your ability to do work and none of the exceptions applies, your benefits will be continued.

(3) *Determining whether your impairment(s) is deemed, under appendix 1 of this subpart, sufficient to preclude you from engaging in gainful activity.* Even where medical improvement related to your ability to work has occurred or an exception applies, in most cases before we can find that you are no longer disabled, we must also show that your impairment(s) is no longer deemed, under appendix 1 of this subpart, sufficient to preclude you from engaging in gainful activity. All current impairments will be considered, not just the impairment(s) present at the time of our most recent favorable determination. Sections 404.1525, 404.1526, and 404.1578 set out how we will decide whether your impairment(s) meets or equals the requirements of appendix 1 of this subpart.

(4) *Evidence and basis for our decision.* Our decisions under this section will be made on a neutral basis without any initial inference as to the presence or absence of disability being drawn from the fact that you have previously been determined to be disabled. We will consider all evidence you submit, as well as all evidence we obtain from your treating physician(s) and other medical or nonmedical sources. What constitutes ''evidence'' and our procedures for obtaining it are set out in §§ 404.1512 through 404.1518. Our determination regarding whether your disability continues will be made on the basis of the weight of the evidence.

(5) *Point of comparison.* For purposes of determining whether medical improvement has occurred, we will compare the current severity of that impairment(s) which was present at the time of the most recent favorable medical decision that you were disabled or continued to be disabled to the medical severity of that impairment(s) at that time. If medical improvement has occurred, we will determine whether the medical improvement is related to your ability to do work based on this previously existing impairment(s). The most recent favorable medical decision is the latest decision involving a consideration of the medical evidence and the issue of whether you were disabled or continued to be disabled which became final.

(c) *Determining medical improvement and its relationship to your ability to do work.* Paragraphs (b) (1) and (2) of this section discuss what we mean by medical improvement and how we determine whether medical improvement is related to your ability to work.

(1) *Medical improvement.* Medical improvement is any decrease in the medical severity of impairment(s) present

at the time of the most recent favorable medical decision that you were disabled or continued to be disabled. Whether medical improvement has occurred is determined by a comparison of prior and current medical evidence which must show that there have been changes (improvement) in the symptoms, signs or laboratory findings associated with that impairment(s).

(2) *Determining whether medical improvement is related to ability to work.* If there is a decrease in medical severity as shown by the signs, symptoms and laboratory findings, we then must determine if it is related to your ability to do work, as explained in paragraph (b)(2) of this section. In determining if the medical improvement that has occurred is related to your ability to work, we will assess whether the previously existing impairments still meet or equal the level of severity contemplated by the same listing section in appendix 1 of this subpart which was used in making our most recent favorable decision. Appendix 1 of this subpart describes impairments which, if severe enough, affect a person's ability to work. If the appendix level of severity is met or equaled, the individual is deemed, in the absence of evidence of the contrary, to be unable to engage in gainful activity. If there has been medical improvement to the degree that the requirement of the listing section is no longer met or equaled, then the medical improvement is related to your ability to work. Unless an objective assessment shows that the listing requirement is no longer met or equaled based on actual changes shown by the medical evidence, the medical improvement that has occurred will not be considered to be related to your ability to work.

(3) *Prior file cannot be located.* If the prior file cannot be located, we will first determine whether your current impairment(s) is deemed, under appendix 1 of this subpart, sufficient to preclude you from engaging in gainful activity. (In this way, we will be able to determine that your disability continues at the earliest time without addressing the issue of reconstructing prior evidence which can be a lengthy process.) If so, your benefits will continue unless one of the second group of exceptions applies (see paragraph (e) of this section). If not, we will determine whether an attempt should be made to reconstruct those portions of the file that were relevant to our most recent favorable medical decision (e.g., medical evidence from treating sources and the results of consultative examinations). This determination will consider the potential availability of old records in light of their age, whether the source of the evidence is still in operation, etc.; and whether reconstruction efforts will yield a complete record of the basis for the most recent favorable medical decision. If relevant parts of the prior record are not reconstructed either because it is determined not to attempt reconstruction or because such efforts fail, medical improvement cannot be found. The documentation of your current impairments will provide a basis for any future reviews. If the missing file is later found, it may serve as a basis for reopening any decision under this section in accordance with the rules in §404.988.

(4) *Impairment(s) subject to temporary remission.* In some cases the evidence shows that an individual's impairment is subject to temporary remission. In assessing whether medical improvement has occurred in persons with this type of impairment, we will be careful to consider the longitudinal history of the impairment(s), including the occurrence of prior remissions, and prospects for future worsening of the impairment(s). Improvement in such impairments that is only temporary will not warrant a finding of medical improvement.

(5) *Applicable listing has been revised since the most recent favorable medical decision.* When determining whether any medical improvement is related to your ability to work, we use the same listing section in appendix 1 of this subpart which was used to make our prior favorable decision. We will use the listing as it appeared at the time of the prior decision, even where the requirement(s) of the listing was subsequently changed. The current revised listing requirement will be used if we determine that you have medically improved and it is necessary to determine

whether you are now considered unable to engage in gainful activity.

(d) *First group of exceptions to medical improvement.* The law provides for certain limited situations when your disability can be found to have ended even though medical improvement has not occurred, if your impairment(s) is no longer considered, under appendix 1 of this subpart, sufficient to preclude you from engaging in gainful activity. These exceptions to medical improvement are intended to provide a way of finding that a person is no longer disabled in those limited situations where, even though there has been no decrease in severity of the impairment(s), evidence shows that the person should no longer be considered disabled or never should have been considered disabled. If one of these exceptions applies, before we can find you are no longer disabled, we must also show that, taking all your current impairment(s) into account, not just those that existed at the time of our most recent favorable medical decision, your impairment(s) is no longer deemed, under appendix 1 of this subpart, sufficient to preclude you from engaging in gainful activity. As part of the review process, you will be asked about any medical therapy you received or are receiving. Your answers and the evidence gathered as a result as well as all other evidence, will serve as the basis for the finding that an exception does or does not apply.

(1) *Substantial evidence shows that you are the beneficiary of advances in medical therapy or technology (related to your ability to work).* Advances in medical therapy or technology are improvements in treatment or rehabilitative methods which have favorably affected the severity of your impairment(s). We will apply this exception when substantial evidence shows that you have been the beneficiary of services which reflect these advances and they have favorably affected the severity of your impairment(s). This decision will be based on new medical evidence. In many instances, an advanced medical therapy or technology will result in a decrease in severity as shown by symptoms, signs and laboratory findings which will meet the definition of medical improvement. This exception will, therefore, see very limited application.

(2) *Substantial evidence shows that based on new or improved diagnostic or evaluative techniques your impairment(s) is not as disabling as it was considered to be at the time of the most recent favorable decision.* Changing methodologies and advances in medical and other diagnostic or evaluative techniques have given, and will continue to give, rise to improved methods for measuring and documenting the effect of various impairments on the ability to do work. Where, by such new or improved methods, substantial evidence shows that your impairment(s) is not as severe as was determined at the time of our most recent favorable medical decision, such evidence may serve as a basis for finding that you are no longer disabled, if your impairment(s) is no longer deemed, under appendix 1 of this subpart, sufficient to preclude you from engaging in gainful activity. In order to be used under this exception, however, the new or improved techniques must have become generally available after the date of our most recent favorable medical decision.

(i) *How we will determine which methods are new or improved techniques and when they become generally available.* New or improved diagnostic techniques or evaluations will come to our attention by several methods. In reviewing cases, we often become aware of new techniques when their results are presented as evidence. Such techniques and evaluations are also discussed and acknowledged in medical literature by medical professional groups and other governmental entities. Through these sources, we develop listings of new techniques and when they become generally available. For example, we will consult the Health Care Financing Administration for its experience regarding when a technique is recognized for payment under Medicare and when they began paying for the technique.

(ii) *How you will know which methods are new or improved techniques and when they become generally available.* We will let you know which methods we consider to be new or improved techniques and when they become available through two vehicles.

(A) Some of the future changes in the Listing of Impairments in appendix 1 of this subpart will be based on new or improved diagnostic or evaluative techniques. Such listing changes will clearly state this fact as they are published as Notices of Proposed Rulemaking and the new or improved technique will be considered generally available as of the date of the final publication of that particular listing in the FEDERAL REGISTER.

(B) A cumulative list since 1970 of new or improved diagnostic techniques or evaluations, how they changed the evaluation of the applicable impairment and the month and year they became generally available, will be published in the *Notices* section of the FEDERAL REGISTER. Included will be any changes in the Listing of Impairments published in the Code of Federal Regulations since 1970 which are reflective of new or improved techniques. No cases will be processed under this exception until this cumulative listing is so published. Subsequent changes to the list will be published periodically. The period will be determined by the volume of changes needed.

Example: The electrocardiographic exercise test has replaced the Master's 2-step test as a measurement of heart function since the time of your last favorable medical decision. Current evidence could show that your condition, which was previously evaluated based on the Master's 2-step test, is not now as disabling as was previously thought. If, taking all your current impairments into account, you are now able to engage in gainful activity, this exception would be used to find that you are no longer disabled even if medical improvement has not occurred.

(3) *Substantial evidence demonstrates that any prior disability decision was in error*. We will apply the exception to medical improvement based on error if substantial evidence (which may be evidence on the record at the time any prior determination of the entitlement to benefits based on disability was made, or newly obtained evidence which relates to that determination) demonstrates that a prior determination was in error. A prior determination will be found in error only if:

(i) Substantial evidence shows on its face that the decision in question should not have been made (e.g., the evidence in your file such as pulmonary function study values was misread or an adjudicative standard such as a listing in appendix 1 of this subpart was misapplied).

Example: You were granted benefits when it was determined that your epilepsy met Listing 11.02. This listing calls for a finding of major motor seizures more frequently than once a month as documented by EEG evidence and by a detailed description of a typical seizure pattern. A history of either diurnal episodes or nocturnal episodes with residuals interfering with daily activities is also required. On review, it is found that a history of the frequency of your seizures showed that they occurred only once or twice a year. The prior decision would be found to be in error, and whether you were still considered to be disabled would be based on whether your current impairment(s) meets or equals the requirements of appendix 1 of this subpart.

(ii) At the time of the prior evaluation, required and material evidence of the severity of your impairment(s) was missing. That evidence becomes available upon review, and substantial evidence demonstrates that had such evidence been present at the time of the prior determination, disability would not have been found.

(iii) Substantial evidence which is new evidence which relates to the prior determination (of allowance or continuance) refutes the conclusions that were based upon the prior evidence (e.g., a tumor thought to be malignant was later shown to have actually been benign). Substantial evidence must show that had the new evidence (which relates to the prior determination) been considered at the time of the prior decision, the claim would not have been allowed or continued. A substitution of current judgment for that used in the prior favorable decision will not be the basis for applying this exception.

Example: You were previously granted disability benefits on the basis of diabetes mellitus which the prior adjudicator believed was equivalent to the level of severity contemplated in the Listing of Impairments. The prior record shows that you had ''brittle'' diabetes for which you were taking insulin. Your urine was 3+ for sugar, and you alleged occasional hypoglycemic attacks caused by exertion. On review, symptoms, signs and laboratory findings are unchanged. The current adjudicator believes, however,

that your impairment does not equal the severity contemplated by the listings. Error *cannot* be found because it would represent a substitution of current judgment for that of the prior adjudicator that your impairment equaled a listing.

(iv) The exception for error will not be applied retroactively under the conditions set out above unless the conditions for reopening the prior decision (see § 404.988) are met.

(4) *You are currently engaging in substantial gainful activity.* If you are currently engaging in substantial gainful activity before we determine whether you are no longer disabled because of your work activity, we will consider whether you are entitled to a trial work period as set out in § 404.1592. We will find that your disability has ended in the month in which you demonstrated your ability to engage in substantial gainful activity (following completion of a trial work period, where it applies). This exception does not apply in determining whether you continue to have a disabling impairment(§ 404.1511) for purposes of deciding your eligibility for a reentitlement period (§ 404.1592a).

(e) *Second group of exceptions to medical improvement.* In addition to the first group of exceptions to medical improvement, the following exceptions may result in a determination that you are no longer disabled. In these situations the decision will be made without a determination that you have medically improved or can engage in gainful activity.

(1) *A prior determination or decision was fraudulently obtained.* If we find that any prior favorable determination or decision was obtained by fraud, we may find that you are not disabled. In addition, we may reopen your claim under the rules in § 404.988. In determining whether a prior favorable determination or decision was fraudulently obtained, we will take into account any physical, mental, educational, or linguistic limitations (including any lack of facility with the English language) which you may have had at the time.

(2) *You do not cooperate with us.* If there is a question about whether you continue to be disabled and we ask you to give us medical or other evidence or to go for a physical or mental examination by a certain date, we will find that your disability has ended if you fail, without good cause, to do what we ask. Section 404.911 explains the factors we consider and how we will determine generally whether you have good cause for failure to cooperate. In addition, § 404.1518 discusses how we determine whether you have good cause for failing to attend a consultative examination. The month in which your disability ends will be the first month in which you failed to do what we asked.

(3) *We are unable to find you.* If there is a question about whether you continue to be disabled and we are unable to find you to resolve the question, we will determine that your disability has ended. The month your disability ends will be the first month in which the question arose and we could not find you.

(4) *You fail to follow prescribed treatment which would be expected to restore your ability to engage in gainful activity.* If treatment has been prescribed for you which would be expected to restore your ability to work, you must follow that treatment in order to be paid benefits. If you are not following that treatment and you do not have good cause for failing to follow that treatment, we will find that your disability has ended (see § 404.1530(c)). The month your disability ends will be the first month in which you failed to follow the prescribed treatment.

(f) *Evaluation steps.* To assure that disability reviews are carried out in a uniform manner, that decisions of continuing disability can be made in the most expeditious and administratively efficient way, and that any decisions to stop disability benefits are made objectively, neutrally and are fully documented, we will follow specific steps in reviewing the question of whether your disability continues. Our review may stop and benefits may be *continued* at any point if we determine there is sufficient evidence to find that you are still unable to engage in gainful activity. The steps are:

(1) Are you engaging in substantial gainful activity? If you are (and any applicable trial work period has been completed), we will find disability to have ended.

(2) If you are not, has there been medical improvement as defined in paragraph (b)(1) of this section? If there has been medical improvement as shown by a decrease in medical severity, see step (3). If there has been no decrease in medical severity, there has been no medical improvement. (see step (4).)

(3) If there has been medical improvement, we must determine (in accordance with paragraph (b)(2) of this section) whether it is related to your ability to work. If medical improvement is *not* related to your ability to do work, see step (4). If medical improvement is related to your ability to do work, see step (5).

(4) If we found at step (2) that there has been no medical improvement or if we found at step (3) that the medical improvement is not related to your ability to work, we consider whether any of the exceptions in paragraphs (d) and (e) of this section apply. If none of them apply, your disability will be found to continue. If one of the first group of exceptions to medical improvement (see paragraph (d) of this section) applies, we will proceed to step (5). If an exception from the second group of exceptions to medical improvement applies, your disability will be found to have ended. The second group of exceptions to medical improvement may be considered at any point in this process.

(5) If medical improvement is related to your ability to work or if one of the first group of exceptions to medical improvement applies, we will determine (considering all your impairments) whether the requirements of appendix 1 of this subpart are met or equaled. If your impairment(s) meets or equals the requirements of appendix 1 of this subpart, your disability will be found to continue. If not, your disability will be found to have ended.

(g) *The month in which we will find you are no longer disabled.* If the evidence shows that you are no longer disabled, we will find that your disability ended in the earliest of the following months—

(1) The month the evidence shows you are no longer disabled under the rules set out in this section, and you were disabled only for a specified period of time in the past;

(2) The month the evidence shows you are no longer disabled under the rules set out in this section, but not earlier than the month in which we mail you a notice saying that the information we have shows that you are not disabled;

(3) The month in which you demonstrated your ability to engage in substantial gainful activity (following completion of a trial work period); however, we may pay you benefits for certain months in and after the reentitlement period which follows the trial work period. (See §404.1592 for a discussion of the trial work period, §404.1592a for a discussion of the reentitlement period, and §404.337 for when your benefits will end.);

(4) The month in which you return to full-time work, with no significant medical restrictions and acknowledge that medical improvement has occurred, as long as we expected your impairment(s) to improve (see §404.1591);

(5) The first month in which you failed to do what we asked, without good cause when the rule set out in paragraph (e)(2) of this section applies;

(6) The first month in which the question of continuing disability arose and we could not find you, when the rule set out in paragraph (e)(3) of this section applies;

(7) The first month in which you failed to follow prescribed treatment without good cause, when the rule set out in paragraph (e)(4) of this section applies; or

(8) The first month you were told by your physician that you could return to work provided there is no substantial conflict between your physician's and your statements regarding your awareness of your capacity for work and the earlier date is supported by medical evidence.

(h) *Before we stop your benefits.* Before we determine you are no longer disabled, we will give you a chance to explain why we should not do so. Sections 404.1595 and 404.1597 describe your

rights (including appeal rights) and the procedures we will follow.

[50 FR 50126, Dec. 6, 1985; 51 FR 7063, Feb. 28, 1986; 51 FR 16015, Apr. 30, 1986, as amended at 57 FR 30121, July 8, 1992; 59 FR 1635, Jan. 12, 1994]

BLINDNESS

§ 404.1581 Meaning of blindness as defined in the law.

We will consider you blind under the law for a period of disability and for payment of disability insurance benefits if we determine that you are statutorily blind. Statutory blindness is defined in the law as central visual acuity of 20/200 or less in the better eye with the use of correcting lens. An eye which has a limitation in the field of vision so that the widest diameter of the visual field subtends an angle no greater than 20 degrees is considered to have a central visual acuity of 20/200 or less. Your blindness must meet the duration requirement in § 404.1509. We do not consider certain felony-related and prison-related impairments, as explained in § 404.1506.

[45 FR 55584, Aug. 20, 1980, as amended at 48 FR 5715, Feb. 8, 1983]

§ 404.1582 A period of disability based on blindness.

If we find that you are blind and you meet the insured status requirement, we may establish a period of disability for you regardless of whether you can do substantial gainful activity. A period of disability protects your earnings record under Social Security so that the time you are disabled will not count against you in determining whether you will have worked long enough to qualify for benefits and the amount of your benefits. However, you will not necessarily be entitled to receive disability insurance cash benefits even though you are blind. If you are a blind person under age 55, you must be unable to do any substantial gainful activity in order to be paid disability insurance cash benefits.

§ 404.1583 How we determine disability for blind persons who are age 55 or older.

We will find that you are eligible for disability insurance benefits even though you are still engaging in substantial gainful activity, if—

(a) You are blind;

(b) You are age 55 or older; and

(c) You are unable to use the skills or abilities like the ones you used in any substantial gainful activity which you did regularly and for a substantial period of time. (However, you will not be paid any cash benefits for any month in which you are doing substantial gainful activity.)

§ 404.1584 Evaluation of work activity of blind people.

(a) *General*. If you are blind (as explained in § 404.1581), we will consider the earnings from the work you are doing to determine whether or not you should be paid cash benefits.

(b) *Under Age 55*. If you are under age 55, we will evaluate the work you are doing using the guides in paragraph (d) of this section to determine whether or not your work shows that you are doing substantial gainful activity. If you are not doing substantial gainful activity, we will pay you cash benefits. If you are doing substantial gainful activity, we will not pay you cash benefits. However, you will be given a period of disability as described in subpart D of this part.

(c) *Age 55 or older*. If you are age 55 or older, we will evaluate your work using the guides in paragraph (d) of this section to determine whether or not your work shows that you are doing substantial gainful activity. If you have not shown this ability, we will pay you cash benefits. If you have shown an ability to do substantial gainful activity, we will evaluate your work activity to find out how your work compares with the work you did before. If the skills and abilities of your new work are about the same as those you used in the work you did before, we will not pay you cash benefits. However, if your new work requires skills and abilities which are less than or different than those you used in the work you did before, we will pay you cash benefits, but not for any month in which you actually perform substantial gainful activity.

(d) *Evaluation of earnings*—(1) *Earnings that will ordinarily show that you*

have engaged in substantial gainful activity. We will ordinarily consider that your earnings from your work activities show that you have engaged in substantial gainful activity if your monthly earnings average more than the amount(s) shown in paragraphs (d)(2) and (3) of this section. We will apply §§ 404.1574(a)(2), 404.1575(c), and 404.1576 in determining the amount of your average earnings.

(2) *Substantial gainful activity guidelines for taxable years before 1978*. For work activity performed in taxable years before 1978, the average earnings per month that we ordinarily consider enough to show that you have done substantial gainful activity are the same for blind people as for others. See § 404.1574(b)(2) for the earnings guidelines for other than blind individuals.

(3) *Substantial gainful activity guidelines for taxable years beginning 1978*. For taxable years beginning 1978, if you are blind, the law provides different earnings guidelines for determining if your earnings from your work activities are substantial gainful activity. Ordinarily, we consider your work to be substantial gainful activity, if your average monthly earnings are more than those shown in Table I. For years after 1977 and before 1996, increases in the substantial gainful activity guideline were linked to increases in the monthly exempt amount under the retirement earnings test for individuals aged 65 to 69. Beginning with 1996, increases in the substantial gainful activity amount have depended only on increases in the national average wage index.

TABLE I

Over	In year(s)
$334	1978
$375	1979
$417	1980
$459	1981
$500	1982
$550	1983
$580	1984
$610	1985
$650	1986
$680	1987
$700	1988
$740	1989
$780	1990
$810	1991
$850	1992
$880	1993
$930	1994

TABLE I—Continued

Over	In year(s)
$940	1995
$960	1996
$1,000	1997
$1,050	1998
$1,110	1999
$1,170	2000

[45 FR 55584, Aug. 20, 1980, as amended at 48 FR 21939, May 16, 1983; 65 FR 42786, July 11, 2000]

§ 404.1585 Trial work period for persons age 55 or older who are blind.

If you become eligible for disability benefits even though you were doing substantial gainful activity because you are blind and age 55 or older, you are entitled to a trial work period if—

(a) You later return to substantial gainful activity that requires skills or abilities comparable to those required in the work you regularly did before you became blind or became 55 years old, whichever is later; or

(b) Your last previous work ended because of an impairment and the current work requires a significant vocational adjustment.

§ 404.1586 Why and when we will stop your cash benefits.

(a) *When you are not entitled to benefits*. If you become entitled to disability cash benefits as a statutorily blind person, we will find that you are no longer entitled to benefits beginning with the earliest of—

(1) The month your vision, based on current medical evidence, does not meet the definition of blindness and your disability does not continue under the rules in § 404.1594 and you were disabled only for a specified period of time in the past;

(2) The month your vision, based on current medical evidence, does not meet the definition of blindness and your disability does not continue under the rules in § 404.1594, but not earlier than the month in which we mail you a notice saying that the information we have shows that you are not disabled;

(3) If you are under age 55, the month in which you demonstrated your ability to engage in substantial gainful activity (following completion of a trial

work period); however, we may pay you benefits for certain months in and after the reentitlement period which follows the trial work period. (See § 404.1592a for a discussion of the reentitlement period, and § 404.316 on when your benefits will end.); or

(4) If you are age 55 or older, the month (following completion of a trial work period) when your work activity shows you are able to use, in substantial gainful activity, skills and abilities comparable to those of some gainful activity which you did with some regularity and over a substantial period of time. The skills and abilities are compared to the activity you did prior to age 55 or prior to becoming blind, whichever is later.

(b) *If we find that you are not entitled to disability cash benefits.* If we find that you are not entitled to disability cash benefits on the basis of your work activity but your visual impairment is sufficiently severe to meet the definition of blindness, the period of disability that we established for you will continue.

(c) *If you do not follow prescribed treatment.* If treatment has been prescribed for you that can restore your ability to work, you must follow that treatment in order to be paid benefits. If you are not following that treatment and you do not have a good reason for failing to follow that treatment (see § 404.1530(c)), we will find that your disability has ended. The month in which your disability will be found to have ended will be the first month in which you failed to follow the prescribed treatment.

(d) *If you do not cooperate with us.* If we ask you to give us medical or other evidence or to go for a medical examination by a certain date, we will find that your disability has ended if you fail, without good cause, to do what we ask. Section 404.911 explains the factors we consider and how we will determine generally whether you have good cause for failure to cooperate. In addition, § 404.1518 discusses how we determine whether you have good cause for failing to attend a consultative examination. The month in which your disability will be found to have ended will be the month in which you failed to do what we asked.

(e) *If we are unable to find you.* If there is a question about whether you continue to be disabled by blindness and we are unable to find you to resolve the question, we will find that your disability, has ended. The month it ends will be the first month in which the question arose and we could not find you.

(f) *Before we stop your benefits.* Before we stop your benefits or period of disability, we will give you a chance to give us your reasons why we should not stop your benefits or your period of disability. Section 404.1595 describes your rights and the procedures we will follow.

(g) *If you are in an appropriate program of vocational rehabilitation services, employment services, or other support services.* (1) Your benefits, and those of your dependents, may be continued after your impairment is no longer disabling if—

(i) You are participating in an appropriate program of vocational rehabilitation services, employment services, or other support services, as described in § 404.327(a) and (b);

(ii) You began participating in the program before the date your disability ended; and

(iii) We have determined under § 404.328 that your completion of the program, or your continuation in the program for a specified period of time, will increase the likelihood that you will not have to return to the disability benefit rolls.

(2) We generally will stop your benefits with the earliest of these months—

(i) The month in which you complete the program; or

(ii) The month in which you stop participating in the program for any reason (see § 404.327(b) for what we mean by ''participating'' in the program); or

(iii) The month in which we determine under § 404.328 that your continuing participation in the program will no longer increase the likelihood that you will not have to return to the disability benefit rolls.

Exception to paragraph (d): In no case will we stop your benefits with a month earlier than the second month after the month your disability ends,

provided that you meet all other requirements for entitlement to and payment of benefits through such month.

[45 FR 55584, Aug. 20, 1980, as amended at 47 FR 31543, July 21, 1982; 47 FR 52693, Nov. 23, 1982; 49 FR 22272, May 29, 1984; 50 FR 50130, Dec. 6, 1985; 51 FR 17617, May 14, 1986; 59 FR 1635, Jan. 12, 1994; 70 FR 36507, June 24, 2005]

§ 404.1587 Circumstances under which we may suspend and terminate your benefits before we make a determination.

(a) *We will suspend your benefits if you are not disabled.* We will suspend your benefits if all of the information we have clearly shows that you are not disabled and we will be unable to complete a determination soon enough to prevent us from paying you more monthly benefits than you are entitled to. This may occur when you are blind as defined in the law and age 55 or older and you have returned to work similar to work you previously performed.

(b) *We will suspend your benefits if you fail to comply with our request for necessary information.* We will suspend your benefits effective with the month in which it is determined in accordance with § 404.1596(b)(2)(i) that your disability benefits should stop due to your failure, without good cause (see § 404.911), to comply with our request for necessary information. When we have received the information, we will reinstate your benefits for any previous month for which they are otherwise payable, and continue with the CDR process.

(c) *We will terminate your benefits.* We will terminate your benefits following 12 consecutive months of benefit suspension because you did not comply with our request for information in accordance with § 404.1596(b)(2)(i). We will count the 12-month suspension period from the start of the first month that you stopped receiving benefits (see paragraph (b) of this section). This termination is effective with the start of the 13th month after the suspension began because you failed to cooperate.

[71 FR 60822, Oct. 17, 2006]

CONTINUING OR STOPPING DISABILITY

§ 404.1588 Your responsibility to tell us of events that may change your disability status.

(a) *Your responsibility to report changes to us.* If you are entitled to cash benefits or to a period of disability because you are disabled, you should promptly tell us if—

(1) Your condition improves;

(2) You return to work;

(3) You increase the amount of your work; or

(4) Your earnings increase.

(b) *Our responsibility when you report your work to us.* When you or your representative report changes in your work activity to us under paragraphs (a)(2), (a)(3), and (a)(4) of this section, we will issue a receipt to you or your representative at least until a centralized computer file that records the information that you give us and the date that you make your report is in place. Once the centralized computer file is in place, we will continue to issue receipts to you or your representative if you request us to do so.

[71 FR 66866, Nov. 17, 2006]

§ 404.1589 We may conduct a review to find out whether you continue to be disabled.

After we find that you are disabled, we must evaluate your impairment(s) from time to time to determine if you are still eligible for disability cash benefits. We call this evaluation a continuing disability review. We may begin a continuing disability review for any number of reasons including your failure to follow the provisions of the Social Security Act or these regulations. When we begin such a review, we will notify you that we are reviewing your eligibility for disability benefits, why we are reviewing your eligibility, that in medical reviews the medical improvement review standard will apply, that our review could result in the termination of your benefits, and that you have the right to submit medical and other evidence for our consideration during the continuing disability review. In doing a medical review, we will develop a complete medical history of at least the preceding 12

months in any case in which a determination is made that you are no longer under a disability. If this review shows that we should stop payment of your benefits, we will notify you in writing and give you an opportunity to appeal. In § 404.1590 we describe those events that may prompt us to review whether you continue to be disabled.

[51 FR 16825, May 7, 1986]

§ 404.1590 When and how often we will conduct a continuing disability review.

(a) *General.* We conduct continuing disability reviews to determine whether or not you continue to meet the disability requirements of the law. Payment of cash benefits or a period of disability ends if the medical or other evidence shows that you are not disabled as determined under the standards set out in section 223(f) of the Social Security Act. In paragraphs (b) through (g) of this section, we explain when and how often we conduct continuing disability reviews for most individuals. In paragraph (h) of this section, we explain special rules for some individuals who are participating in the Ticket to Work program. In paragraph (i) of this section, we explain special rules for some individuals who work.

(b) *When we will conduct a continuing disability review.* Except as provided in paragraphs (h) and (i) of this section, we will start a continuing disability review if—

(1) You have been scheduled for a medical improvement expected diary review;

(2) You have been scheduled for a periodic review (medical improvement possible or medical improvement not expected) in accordance with the provisions of paragraph (d) of this section;

(3) We need a current medical or other report to see if your disability continues. (This could happen when, for example, an advance in medical technology, such as improved treatment for Alzheimer's disease or a change in vocational therapy or technology raises a disability issue.);

(4) You return to work and successfully complete a period of trial work;

(5) Substantial earnings are reported to your wage record;

(6) You tell us that—

(i) You have recovered from your disability; or

(ii) You have returned to work;

(7) Your State Vocational Rehabilitation Agency tells us that—

(i) The services have been completed; or

(ii) You are now working; or

(iii) You are able to work;

(8) Someone in a position to know of your physical or mental condition tells us any of the following, and it appears that the report could be substantially correct:

(i) You are not disabled; or

(ii) You are not following prescribed treatment; or

(iii) You have returned to work; or

(iv) You are failing to follow the provisions of the Social Security Act or these regulations;

(9) Evidence we receive raises a question as to whether your disability continues; or

(10) You have been scheduled for a vocational reexamination diary review.

(c) *Definitions.* As used in this section—

Medical improvement expected diary—refers to a case which is scheduled for review at a later date because the individual's impairment(s) is expected to improve. Generally, the diary period is set for not less than 6 months or for not more than 18 months. Examples of cases likely to be scheduled for medical improvement expected diary are fractures and cases in which corrective surgery is planned and recovery can be anticipated.

Permanent impairment—medical improvement not expected—refers to a case in which any medical improvement in the person's impairment(s) is not expected. This means an extremely severe condition determined on the basis of our experience in administering the disability programs to be at least static, but more likely to be progressively disabling either by itself or by reason of impairment complications, and unlikely to improve so as to permit the individual to engage in substantial gainful activity. The interaction of the individual's age, impairment consequences and lack of recent attachment to the labor market may also be considered in determining whether an impairment is permanent.

Improvement which is considered temporary under §404.1579(c)(4) or §404.1594(c)(3)(iv), as appropriate, will not be considered in deciding if an impairment is permanent. Examples of permanent impairments taken from the list contained in our other written guidelines which are available for public review are as follows and are not intended to be all inclusive:

(1) Parkinsonian Syndrome which has reached the level of severity necessary to meet the Listing in appendix 1.

(2) Amyotrophic Lateral Sclerosis which has reached the level of severity necessary to meet the Listing in appendix 1.

(3) Diffuse pulmonary fibrosis in an individual age 55 or over which has reached the level of severity necessary to meet the Listing in appendix 1.

(4) Amputation of leg at hip.

Nonpermanent impairment—refers to a case in which any medical improvement in the person's impairment(s) is possible. This means an impairment for which improvement cannot be predicted based on current experience and the facts of the particular case but which is not at the level of severity of an impairment that is considered permanent. Examples of nonpermanent impairments are: regional enteritis, hyperthyroidism, and chronic ulcerative colitis.

Vocational reexamination diary—refers to a case which is scheduled for review at a later date because the individual is undergoing vocational therapy, training or an educational program which may improve his or her ability to work so that the disability requirement of the law is no longer met. Generally, the diary period will be set for the length of the training, therapy, or program of education.

(d) *Frequency of review*. If your impairment is expected to improve, generally we will review your continuing eligibility for disability benefits at intervals from 6 months to 18 months following our most recent decision. Our notice to you about the review of your case will tell you more precisely when the review will be conducted. If your disability is not considered permanent but is such that any medical improvement in your impairment(s) cannot be accurately predicted, we will review your continuing eligibility for disability benefits at least once every 3 years. If your disability is considered permanent, we will review your continuing eligibility for benefits no less frequently than once every 7 years but no more frequently than once every 5 years. Regardless of your classification, we will conduct an immediate continuing disability review if a question of continuing disability is raised pursuant to paragraph (b) of this section.

(e) *Change in classification of impairment*. If the evidence developed during a continuing disability review demonstrates that your impairment has improved, is expected to improve, or has worsened since the last review, we may reclassify your impairment to reflect this change in severity. A change in the classification of your impairment will change the frequency with which we will review your case. We may also reclassify certain impairments because of improved tests, treatment, and other technical advances concerning those impairments.

(f) *Review after administrative appeal*. If you were found eligible to receive or to continue to receive disability benefits on the basis of a decision by an administrative law judge, the Appeals Council or a Federal court, we will not conduct a continuing disability review earlier than 3 years after that decision unless your case should be scheduled for a medical improvement expected or vocational reexamination diary review or a question of continuing disability is raised pursuant to paragraph (b) of this section.

(g) *Waiver of timeframes*. All cases involving a nonpermanent impairment will be reviewed by us at least once every 3 years unless we, after consultation with the State agency, determine that the requirement should be waived to ensure that only the appropriate number of cases are reviewed. The appropriate number of cases to be reviewed is to be based on such considerations as the backlog of pending reviews, the projected number of new applications, and projected staffing levels. Such waiver shall be given only after good faith effort on the part of

the State to meet staffing requirements and to process the reviews on a timely basis. Availability of independent medical resources may also be a factor. A *waiver* in this context refers to our administrative discretion to determine the appropriate number of cases to be reviewed on a State by State basis. Therefore, your continuing disability review may be delayed longer than 3 years following our original decision or other review under certain circumstances. Such a delay would be based on our need to ensure that backlogs, reviews required to be performed by the Social Security Disability Benefits Reform Act of 1984 (Pub. L. 98–460), and new disability claims workloads are accomplished within available medical and other resources in the State agency and that such reviews are done carefully and accurately.

(h) *If you are participating in the Ticket to Work program.* If you are participating in the Ticket to Work program, we will not start a continuing disability review during the period in which you are using a ticket. However, this provision does not apply to reviews we conduct using the rules in §§ 404.1571–404.1576 to determine whether the work you have done shows that you are able to do substantial gainful activity and are, therefore, no longer disabled. See subpart C of part 411 of this chapter.

(i) *If you are working and have received social security disability benefits for at least 24 months*—(1) *General.* Notwithstanding the provisions in paragraphs (b)(4), (b)(5), (b)(6)(ii), (b)(7)(ii), and (b)(8)(iii) of this section, we will not start a continuing disability review based solely on your work activity if—

(i) You are currently entitled to disability insurance benefits as a disabled worker, child's insurance benefits based on disability, or widow's or widower's insurance benefits based on disability; and

(ii) You have received such benefits for at least 24 months (see paragraph (i)(2) of this section).

(2) *The 24-month requirement.* (i) The months for which you have actually received disability insurance benefits as a disabled worker, child's insurance benefits based on disability, or widow's or widower's insurance benefits based on disability that you were due, or for which you have constructively received such benefits, will count for the 24-month requirement under paragraph (i)(1)(ii) of this section, regardless of whether the months were consecutive. We will consider you to have constructively received a benefit for a month for purposes of the 24-month requirement if you were otherwise due a social security disability benefit for that month and your monthly benefit was withheld to recover an overpayment. Any month for which you were entitled to benefits but for which you did not actually or constructively receive a benefit payment will not be counted for the 24-month requirement. Months for which your social security disability benefits are continued under § 404.1597a pending reconsideration and/or a hearing before an administrative law judge on a medical cessation determination will not be counted for the 24-month requirement. If you also receive supplemental security income payments based on disability or blindness under title XVI of the Social Security Act, months for which you received only supplemental security income payments will not be counted for the 24-month requirement.

(ii) In determining whether paragraph (i)(1) of this section applies, we consider whether you have received disability insurance benefits as a disabled worker, child's insurance benefits based on disability, or widow's or widower's insurance benefits based on disability for at least 24 months as of the date on which we start a continuing disability review. For purposes of this provision, the date on which we start a continuing disability review is the date on the notice we send you that tells you that we are beginning to review your disability case.

(3) *When we may start a continuing disability review even if you have received social security disability benefits for at least 24 months.* Even if you meet the requirements of paragraph (i)(1) of this section, we may still start a continuing disability review for a reason(s) other than your work activity. We may start a continuing disability review if we have scheduled you for a periodic review of your continuing disability, we

need a current medical or other report to see if your disability continues, we receive evidence which raises a question as to whether your disability continues, or you fail to follow the provisions of the Social Security Act or these regulations. For example, we will start a continuing disability review when you have been scheduled for a medical improvement expected diary review, and we may start a continuing disability review if you failed to report your work to us.

(4) *Reviews to determine whether the work you have done shows that you are able to do substantial gainful activity.* Paragraph (i)(1) of this section does not apply to reviews we conduct using the rules in §§ 404.1571–404.1576 to determine whether the work you have done shows that you are able to do substantial gainful activity and are, therefore, no longer disabled.

(5) *Erroneous start of the continuing disability review.* If we start a continuing disability review based solely on your work activity that results in a medical cessation determination, we will vacate the medical cessation determination if—

(i) You provide us evidence that establishes that you met the requirements of paragraph (i)(1) of this section as of the date of the start of your continuing disability review and that the start of the review was erroneous; and

(ii) We receive the evidence within 12 months of the date of the notice of the initial determination of medical cessation.

[51 FR 16825, May 7, 1986, as amended at 71 FR 66856, Nov. 17, 2006]

§ 404.1591 If your medical recovery was expected and you returned to work.

If your impairment was expected to improve and you returned to full-time work with no significant medical limitations and acknowledge that medical improvement has occurred, we may find that your disability ended in the month you returned to work. Unless there is evidence showing that your disability has not ended, we will use the medical and other evidence already in your file and the fact that you returned to full-time work without significant limitations to determine that you are no longer disabled. (If your impairment is not expected to improve, we will not ordinarily review your claim until the end of the trial work period, as described in § 404.1592.)

Example: Evidence obtained during the processing of your claim showed that you had an impairment that was expected to improve about 18 months after your disability began. We, therefore, told you that your claim would be reviewed again at that time. However, before the time arrived for your scheduled medical re-examination, you told us that you had returned to work and your impairment had improved. We investigated immediately and found that, in the 16th month after your disability began, you returned to full-time work without any significant medical restrictions. Therefore, we would find that your disability ended in the first month you returned to full-time work.

[50 FR 50130, Dec. 6, 1985]

§ 404.1592 The trial work period.

(a) *Definition of the trial work period.* The trial work period is a period during which you may test your ability to work and still be considered disabled. It begins and ends as described in paragraph (e) of this section. During this period, you may perform *services* (see paragraph (b) of this section) in as many as 9 months, but these months do not have to be consecutive. We will not consider those services as showing that your disability has ended until you have performed services in at least 9 months. However, after the trial work period has ended we will consider the work you did during the trial work period in determining whether your disability ended at any time after the trial work period.

(b) *What we mean by services.* When used in this section, *services* means any activity (whether legal or illegal), even though it is not substantial gainful activity, which is done in employment or self-employment for pay or profit, or is the kind normally done for pay or profit. We generally do not consider work done without remuneration to be *services* if it is done merely as therapy or training or if it is work usually done in a daily routine around the house or in self-care. We will not consider work you have done as a volunteer in the federal programs described in section 404.1574(d) in determining whether you

have performed services in the trial work period.

(1) *If you are an employee.* We will consider your work as an employee to be *services* if:

(i) *Before January 1, 2002,* your earnings in a month were more than the amount(s) indicated in Table 1 for the year(s) in which you worked.

(ii) *Beginning January 1, 2002,* your earnings in a month are more than an amount determined for each calendar year to be the larger of:

(A) Such amount for the previous year, or

(B) An amount adjusted for national wage growth, calculated by multiplying $530 by the ratio of the national average wage index for the year 2 calendar years before the year for which the amount is being calculated to the national average wage index for 1999. We will then round the resulting amount to the next higher multiple of $10 where such amount is a multiple of $5 but not of $10 and to the nearest multiple of $10 in any other case.

(2) *If you are self-employed.* We will consider your activities as a self-employed person to be *services* if:

(i) *Before January 1, 2002,* your net earnings in a month were more than the amount(s) indicated in Table 2 of this section for the year(s) in which you worked, or the hours you worked in the business in a month are more than the number of hours per month indicated in Table 2 for the years in which you worked.

(ii) *Beginning January 1, 2002,* you work more than 80 hours a month in the business, or your net earnings in a month are more than an amount determined for each calendar year to be the larger of:

(A) Such amount for the previous year, or

(B) An amount adjusted for national wage growth, calculated by multiplying $530 by the ratio of the national average wage index for the year 2 calendar years before the year for which the amount is being calculated to the national average wage index for 1999. We will then round the resulting amount to the next higher multiple of $10 where such amount is a multiple of $5 but not of $10 and to the nearest multiple of $10 in any other case.

TABLE 1—FOR EMPLOYEES

For months	You earn more than
In calendar years before 1979	$50
In calendar years 1979–1989	75
In calendar years 1990–2000	200
In calendar year 2001	530

TABLE 2—FOR THE SELF-EMPLOYED

For months	Your net earnings are more than	Or you work in the business more than
In calendar years before 1979	$50	15 hours.
In calendar years 1979–1989	75	15 hours.
In calendar years 1990–2000	200	40 hours.
In calendar year 2001	530	80 hours.

(c) *Limitations on the number of trial work periods.* You may have only one trial work period during a period of entitlement to cash benefits.

(d) *Who is and is not entitled to a trial work period.* (1) You are generally entitled to a trial work period if you are entitled to disability insurance benefits, child's benefits based on disability, or widow's or widower's or surviving divorced spouse's benefits based on disability.

(2) You are not entitled to a trial work period—

(i) If you are entitled to a period of disability but not to disability insurance benefits, and you are not entitled to any other type of disability benefit under title II of the Social Security Act (*i.e.*, child's benefits based on disability, or widow's or widower's benefits or surviving divorced spouse's benefits based on disability);

(ii) If you perform work demonstrating the ability to engage in substantial gainful activity during any required waiting period for benefits;

(iii) If you perform work demonstrating the ability to engage in substantial gainful activity within 12 months of the onset of the impairment(s) that prevented you from performing substantial gainful activity and before the date of any notice of determination or decision finding that you are disabled; or

(iv) For any month prior to the month of your application for disability benefits (see paragraph (e) of this section).

(e) *When the trial work period begins and ends.* The trial work period begins with the month in which you become entitled to disability insurance benefits, to child's benefits based on disability or to widow's, widower's, or surviving divorced spouse's benefits based on disability. It cannot begin before the month in which you file your application for benefits, and for widows, widowers, and surviving divorced spouses, it cannot begin before December 1, 1980. It ends with the close of whichever of the following calendar months is the earliest:

(1) The 9th month (whether or not the months have been consecutive) in which you have performed services if that 9th month is prior to January 1992;

(2) The 9th month (whether or not the months have been consecutive and whether or not the previous 8 months of services were prior to January 1992) in which you have performed services within a period of 60 consecutive months if that 9th month is after December 1991; or

(3) The month in which new evidence, other than evidence relating to any work you did during the trial work period, shows that you are not disabled, even though you have not worked a full 9 months. We may find that your disability has ended at any time during the trial work period if the medical or other evidence shows that you are no longer disabled. See § 404.1594 for information on how we decide whether your disability continues or ends.

(f) *Nonpayment of benefits for trial work period service months.* See § 404.471 for an explanation of when benefits for trial work period service months are not payable if you are convicted by a Federal court of fraudulently concealing your work activity.

[45 FR 55584, Aug. 20, 1980, as amended at 49 FR 22273, May 29, 1984; 50 FR 50130, Dec. 6, 1985; 54 FR 53605, Dec. 29, 1989; 65 FR 42787, July 11, 2000; 65 FR 82910, Dec. 29, 2000; 71 FR 66866, Nov. 17, 2006]

§ 404.1592a The reentitlement period.

(a) *General.* The reentitlement period is an additional period after 9 months of trial work during which you may continue to test your ability to work if you have a *disabling impairment,* as defined in § 404.1511. If you work during the reentitlement period, we may decide that your disability has ceased because your work is substantial gainful activity and stop your benefits. However, if, after the month for which we found that your disability ceased because you performed substantial gainful activity, you stop engaging in substantial gainful activity, we will start paying you benefits again; you will not have to file a new application. The following rules apply if you complete a trial work period and continue to have a disabling impairment:

(1) The first time you work after the end of your trial work period *and* engage in substantial gainful activity, we will find that your disability ceased. When we decide whether this work is substantial gainful activity, we will apply all of the relevant provisions of §§ 404.1571–404.1576 including, but not limited to, the provisions for averaging earnings, unsuccessful work attempts, and deducting impairment-related work expenses, as well as the special rules for evaluating the work you do after you have received disability benefits for at least 24 months. We will find that your disability ceased in the first month after the end of your trial work period in which you do substantial gainful activity, applying all the relevant provisions in §§ 404.1571–404.1576.

(2)(i) If we determine under paragraph (a)(1) of this section that your disability ceased during the reentitlement period because you perform substantial gainful activity, you will be paid benefits for the first month after the trial work period in which you do substantial gainful activity (*i.e.*, the month your disability ceased) and the two succeeding months, whether or not

you do substantial gainful activity in those succeeding months. After those three months, we will stop your benefits for any month in which you do substantial gainful activity. (See §§ 404.316, 404.337, 404.352 and 404.401a.) If your benefits are stopped because you do substantial gainful activity, they may be started again without a new application and a new determination of disability if you stop doing substantial gainful activity in a month during the reentitlement period. In determining whether you do substantial gainful activity in a month for purposes of stopping or starting benefits during the reentitlement period, we will consider only your work in, or earnings for, that month. Once we have determined that your disability has ceased during the reentitlement period because of the performance of substantial gainful activity as explained in paragraph (a)(1) of this section, we will not apply the provisions of §§ 404.1574(c) and 404.1575(d) regarding unsuccessful work attempts, the provisions of § 404.1574a regarding averaging of earnings, or the special rules in §§ 404.1574(b)(3)(iii) and 404.1575(e) for evaluating the work you do after you have received disability benefits for at least 24 months, to determine whether benefits should be paid for any particular month in the reentitlement period that occurs after the month your disability ceased.

(ii) If anyone else is receiving monthly benefits based on your earnings record, that individual will not be paid benefits for any month for which you cannot be paid benefits during the reentitlement period.

(3) The way we will consider your work activity after your reentitlement period ends (see paragraph (b)(2) of this section) will depend on whether you worked during the reentitlement period and if you did substantial gainful activity.

(i) If you worked during the reentitlement period and we decided that your disability ceased during the reentitlement period because of your work under paragraph (a)(1) of this section, we will find that your entitlement to disability benefits terminates in the first month in which you engaged in substantial gainful activity after the end of the reentitlement period (see § 404.325). (See § 404.321 for when entitlement to a period of disability ends.) When we make this determination, we will consider only your work in, or earnings for, that month; we will not apply the provisions of §§ 404.1574(c) and 404.1575(d) regarding unsuccessful work attempts, the provisions of § 404.1574a regarding averaging of earnings, or the special rules in §§ 404.1574(b)(3)(iii) and 404.1575(e) for evaluating the work you do after you have received disability benefits for at least 24 months.

(ii) If we did not find that your disability ceased because of work activity during the reentitlement period, we will apply all of the relevant provisions of §§ 404.1571–404.1576 including, but not limited to, the provisions for averaging earnings, unsuccessful work attempts, and deducting impairment-related work expenses, as well as the special rules for evaluating the work you do after you have received disability benefits for at least 24 months, to determine whether your disability ceased because you performed substantial gainful activity after the reentitlement period. If we find that your disability ceased because you performed substantial gainful activity in a month after your reentitlement period ended, you will be paid benefits for the month in which your disability ceased and the two succeeding months. After those three months, your entitlement to a period of disability or to disability benefits terminates (see §§ 404.321 and 404.325).

(b) *When the reentitlement period begins and ends.* The reentitlement period begins with the first month following completion of 9 months of trial work but cannot begin earlier than December 1, 1980. It ends with whichever is earlier—

(1) The month before the first month in which your impairment no longer exists or is not medically disabling; or

(2)(i) The last day of the 15th month following the end of your trial work period if you were not entitled to benefits after December 1987; or

(ii) The last day of the 36th month following the end of your trial work period if you were entitled to benefits after December 1987 or if the 15-month period described in paragraph (b)(2)(i)

of this section had not ended as of January 1988. (See §§ 404.316, 404.337, and 404.352 for when your benefits end.)

(c) *When you are not entitled to a reentitlement period.* You are not entitled to a reentitlement period if:

(1) You are entitled to a period of disability, but not to disability insurance cash benefits;

(2) You are not entitled to a trial work period;

(3) Your entitlement to disability insurance benefits ended before you completed 9 months of trial work in that period of disability.

[49 FR 22273, May 29, 1984, as amended at 58 FR 64883, Dec. 10, 1993; 65 FR 42787, July 11, 2000; 71 FR 66856, Nov. 17, 2006]

§ 404.1592b What is expedited reinstatement?

The expedited reinstatement provision provides you another option for regaining entitlement to benefits when we previously terminated your entitlement to disability benefits due to your work activity. The expedited reinstatement provision provides you the option of requesting that your prior entitlement to disability benefits be reinstated, rather than filing a new application for a new period of entitlement. Since January 1, 2001, you can request to be reinstated to benefits if you stop doing substantial gainful activity within 60 months of your prior termination. You must not be able to do substantial gainful activity because of your medical condition. Your current impairment must be the same as or related to your prior impairment and you must be disabled. To determine if you are disabled, we will use our medical improvement review standard that we use in our continuing disability review process. The advantage of using the medical improvement review standard is that we will generally find that you are disabled unless your impairment has improved so that you are able to work or unless an exception under the medical improvement review standard process applies. We explain the rules for expedited reinstatement in §§ 404.1592c through 404.1592f.

[70 FR 57142, Sept. 30, 2005]

§ 404.1592c Who is entitled to expedited reinstatement?

(a) You can have your entitlement to benefits reinstated under expedited reinstatement if—

(1) You were previously entitled to a disability benefit on your own record of earnings as indicated in § 404.315, or as a disabled widow or widower as indicated in § 404.335, or as a disabled child as indicated in § 404.350, or to Medicare entitlement based on disability and Medicare qualified government employment as indicated in 42 CFR 406.15;

(2) Your disability entitlement referred to in paragraph (a)(1) of this section was terminated because you did substantial gainful activity;

(3) You file your request for reinstatement timely under § 404.1592d; and

(4) In the month you file your request for reinstatement—

(i) You are not able to do substantial gainful activity because of your medical condition as determined under paragraph (c) of this section;

(ii) Your current impairment is the same as or related to the impairment that we used as the basis for your previous entitlement referred to in paragraph (a)(2) of this section; and

(iii) You are disabled, as determined under the medical improvement review standard in §§ 404.1594(a) through (e).

(b) You are entitled to reinstatement on the record of an insured person who is or has been reinstated if—

(1) You were previously entitled to one of the following benefits on the record of the insured person—

(i) A spouse or divorced spouse benefit under §§ 404.330 and 404.331;

(ii) A child's benefit under § 404.350; or

(iii) A parent's benefit under § 404.370;

(2) You were entitled to benefits on the record when we terminated the insured person's entitlement;

(3) You meet the requirements for entitlement to the benefit described in the applicable paragraph (b)(1)(i) through (b)(1)(iii) of this section; and

(4) You request to be reinstated.

(c) We will determine that you are not able to do substantial gainful activity because of your medical condition, under paragraph (a)(4)(i) of this section, when:

(1) You certify under § 404.1592d(d)(2) that you are unable to do substantial

gainful activity because of your medical condition;

(2) You do not do substantial gainful activity in the month you file your request for reinstatement; and

(3) We determine that you are disabled under paragraph (a)(4)(iii) of this section.

[70 FR 57142, Sept. 30, 2005]

§ 404.1592d How do I request reinstatement?

(a) You must make your request for reinstatement in writing.

(b) You must have filed your request on or after January 1, 2001.

(c) You must provide the information we request so that we can determine whether you meet the requirements for reinstatement as indicated in § 404.1592c.

(d) If you request reinstatement under § 404.1592c(a)—

(1) We must receive your request within the consecutive 60-month period that begins with the month in which your entitlement terminated due to doing substantial gainful activity. If we receive your request after the 60-month period we can grant you an extension if we determine you had good cause under the standards explained in § 404.911 for not filing the request timely; and

(2) You must certify that you are disabled, that your current impairment(s) is the same as or related to the impairment(s) that we used as the basis for the benefit you are requesting to be reinstated, and that you are unable to do substantial gainful activity because of your medical condition.

[70 FR 57142, Sept. 30, 2005]

§ 404.1592e How do we determine provisional benefits?

(a) You may receive up to 6 consecutive months of provisional cash benefits and Medicare during the provisional benefit period, while we determine whether we can reinstate your disability benefit entitlement under § 404.1592c—

(1) We will pay you provisional benefits, and reinstate your Medicare if you are not already entitled to Medicare, beginning with the month you file your request for reinstatement under § 404.1592c(a).

(2) We will pay you a monthly provisional benefit amount equal to the last monthly benefit payable to you during your prior entitlement, increased by any cost of living increases that would have been applicable to the prior benefit amount under § 404.270. The last monthly benefit payable is the amount of the monthly insurance benefit we determined that was actually paid to you for the month before the month in which your entitlement was terminated, after we applied the reduction, deduction and nonpayment provisions in § 404.401 through § 404.480.

(3) If you are entitled to another monthly benefit payable under the provisions of title II of the Act for the same month you can be paid a provisional benefit, we will pay you an amount equal to the higher of the benefits payable.

(4) If you request reinstatement for more than one benefit entitlement, we will pay you an amount equal to the higher of the provisional benefits payable.

(5) If you are eligible for Supplemental Security Income payments, including provisional payments, we will reduce your provisional benefits under § 404.408b if applicable.

(6) We will not reduce your provisional benefit, or the payable benefit to other individuals entitled on an earnings record, under § 404.403, when your provisional benefit causes the total benefits payable on the earnings record to exceed the family maximum.

(b) You cannot receive provisional cash benefits or Medicare a second time under this section when—

(1) You request reinstatement under § 404.1592c(a);

(2) You previously received provisional cash benefits or Medicare under this section based upon a prior request for reinstatement filed under § 404.1592c(a); and

(3) Your requests under paragraphs (b)(1) and (b)(2) are for the same previous disability entitlement referred to in § 404.1592c(a)(2).

(4) *Examples:*

Example 1: Mr. K files a request for reinstatement in April 2004. His disability benefit had previously terminated in January

2003. Since Mr. K meets other factors for possible reinstatement (*i.e.*, his prior entitlement was terminated within the last 60 months because he was engaging in substantial gainful activity), we start paying him provisional benefits beginning April 2004 while we determine whether he is disabled and whether his current impairment(s) is the same as or related to the impairment(s) that we used as the basis for the benefit that was terminated in January 2003. In July 2004 we determine that Mr. K cannot be reinstated because he is not disabled under the medical improvement review standard; therefore we stop his provisional benefits. Mr. K does not request review of that determination. In January 2005 Mr. K again requests reinstatement on the entitlement that terminated in January 2003. Since this request meets all the factors for possible reinstatement, and his request is still within 60 months from January 2003, we will make a new determination on whether he is disabled and whether his current impairment(s) is the same as or related to the impairment(s) that we used as the basis for the benefit that was terminated in January 2003. Since the January 2005 request and the April 2004 request both request reinstatement on the same entitlement that terminated in January 2003, and since we already paid Mr. K provisional benefits based upon the April 2004 request, we will not pay additional provisional benefits on the January 2005 request for reinstatement.

Example 2: Assume the same facts as shown in Example 1 of this section, with the addition of these facts. We approve Mr. K's January 2005 request for reinstatement and start his reinstated benefits beginning January 2005. Mr. K subsequently returns to work and his benefits are again terminated due to engaging in substantial gainful activity in January 2012. Mr. K must again stop work and requests reinstatement in January 2015. Since Mr. K meets other factors for possible reinstatement (*i.e.*, his prior entitlement was terminated within the last 60 months because he was engaging in substantial gainful activity) we start paying him provisional benefits beginning January 2015 while we determine whether he is disabled and whether his current impairment(s) is the same as or related to the impairment(s) that we used as the basis for the benefit that was terminated in January 2012.

(c) We will not pay you a provisional benefit for a month when an applicable nonpayment rule applies. Examples of when we will not pay a benefit include, but are not limited to—

(1) If you are a prisoner under § 404.468;

(2) If you have been removed/deported under § 404.464; or

(3) If you are an alien outside the United States under § 404.460.

(d) We will not pay you a provisional benefit for any month that is after the earliest of the following months—

(1) The month we send you a notice of our determination on your request for reinstatement;

(2) The month you do substantial gainful activity;

(3) The month before the month you attain full retirement age; or

(4) The fifth month following the month you requested expedited reinstatement.

(e) You are not entitled to provisional benefits if—

(1) Prior to starting your provisional benefits, we determine that you do not meet the requirements for reinstatement under §§ 404.1592c(a); or

(2) We determine that your statements on your request for reinstatement, made under § 404.1592d(d)(2), are false.

(f) Determinations we make regarding your provisional benefits under paragraphs (a) through (e) of this section are final and are not subject to administrative and judicial review under subpart J of part 404.

(g) If you were previously overpaid benefits under title II or title XVI of the Act, we will not recover the overpayment from your provisional benefits unless you give us permission. We can recover Medicare premiums you owe from your provisional benefits.

(h) If we determine you are not entitled to reinstated benefits, provisional benefits we have already paid you under this section that were made prior to the termination month under paragraph (d) of this section will not be subject to recovery as an overpayment unless we determine that you knew, or should have known, you did not meet the requirements for reinstatement in § 404.1592c. If we inadvertently pay you provisional benefits when you are not entitled to them because we have already made a determination described in paragraph (e) of this section, they will be subject to recover as an overpayment under subpart F of part 404.

[70 FR 57142, Sept. 30, 2005]

§ 404.1592f How do we determine reinstated benefits?

(a) If you meet the requirements for reinstatement under § 404.1592c(a), we will then consider in which month to reinstate your entitlement. We will reinstate your entitlement with the earliest month, in the 12-month period that ends with the month before you filed your request for reinstatement, that you would have met all of the requirements under § 404.1592c(a) if you had filed your request for reinstatement in that month. Otherwise, you will be entitled to reinstated benefits beginning with the month in which you filed your request for such benefits. We cannot reinstate your entitlement for any month prior to January 2001.

(b) When your entitlement is reinstated, you are also entitled to Medicare benefits under the provisions of 42 CFR part 406.

(c) We will compute your reinstated benefit amount and determine benefits payable under the applicable paragraphs of §§ 404.201 through 404.480 with certain exceptions—

(1) We will reduce your reinstated benefit due in a month by the amount of the provisional benefit we already paid you for that month. If your provisional benefit paid for a month exceeds the reinstated benefit, we will treat the difference as an overpayment under §§ 404.501 through 404.527.

(2) If you are reinstated on your own earnings record, we will compute your primary insurance amount with the same date of onset we used in your most recent period of disability on your earnings record.

(d) We will not pay you reinstated benefits for any months of substantial gainful activity during your initial reinstatement period. During the initial reinstatement period, the trial work period provisions of § 404.1592 and the reentitlement period provisions of § 404.1592a do not apply. The initial reinstatement period begins with the month your reinstated benefits begin under paragraph (a) of this section and ends when you have had 24 payable months of reinstated benefits. We consider you to have a payable month for the purposes of this paragraph when you do not do substantial gainful activity in that month and when the nonpayment provisions in subpart E of part 404 also do not apply. If the amount of the provisional benefit already paid you for a month equals or exceeds the amount of the reinstated benefit payable for that month so that no additional payment is due, we will consider that month a payable month. When we determine if you have done substantial gainful activity in a month during the initial reinstatement period, we will consider only your work in, or earnings for, that month. We will not apply the unsuccessful work attempt provisions of §§ 404.1574(c) and 404.1575(d) or the averaging of earnings provisions in § 404.1574a.

(e) After you complete the 24-month initial reinstatement period as indicated in paragraph (d) of this section, your subsequent work will be evaluated under the trial work provisions in § 404.1592 and then the reentitlement period in § 404.1592a.

(f) Your entitlement to reinstated benefits ends with the month before the earliest of the following months—

(1) The month an applicable terminating event in § 404.301 through 404.389 occurs;

(2) The month in which you reach retirement age;

(3) The third month following the month in which your disability ceases; or

(4) The month in which you die.

(g) Determinations we make under §§ 404.1592f are initial determinations under § 404.902 and subject to review under subpart J of part 404.

(h) If we determine you are not entitled to reinstated benefits we will consider your request filed under § 404.1592c(a) your intent to claim benefits under § 404.630.

[70 FR 57142, Sept. 30, 2005]

§ 404.1593 Medical evidence in continuing disability review cases.

(a) *General.* If you are entitled to benefits or if a period of disability has been established for you because you are disabled, we will have your case file with the supporting medical evidence previously used to establish or continue your entitlement. Generally, therefore, the medical evidence we will need for a continuing disability review will be that required to make a current

determination or decision as to whether you are still disabled, as defined under the medical improvement review standard. See §§ 404.1579 and 404.1594.

(b) *Obtaining evidence from your medical sources.* You must provide us with reports from your physician, psychologist, or others who have treated or evaluated you, as well as any other evidence that will help us determine if you are still disabled. See § 404.1512. You must have a good reason for not giving us this information or we may find that your disability has ended. See § 404.1594(e)(2). If we ask you, you must contact your medical sources to help us get the medical reports. We will make every reasonable effort to help you in getting medical reports when you give us permission to request them from your physician, psychologist, or other medical sources. See § 404.1512(d)(1) concerning what we mean by every reasonable effort. In some instances, such as when a source is known to be unable to provide certain tests or procedures or is known to be nonproductive or uncooperative, we may order a consultative examination while awaiting receipt of medical source evidence. Before deciding that your disability has ended, we will develop a complete medical history covering at least the 12 months preceding the date you sign a report about your continuing disability status. See § 404.1512(c).

(c) *When we will purchase a consultative examination.* A consultative examination may be purchased when we need additional evidence to determine whether or not your disability continues. As a result, we may ask you, upon our request and reasonable notice, to undergo consultative examinations and tests to help us determine if you are still disabled. See § 404.1517. We will decide whether or not to purchase a consultative examination in accordance with the standards in §§ 404.1519a through 404.1519b.

[56 FR 36962, Aug. 1, 1991]

§ 404.1594 How we will determine whether your disability continues or ends.

(a) *General.* There is a statutory requirement that, if you are entitled to disability benefits, your continued entitlement to such benefits must be reviewed periodically. If you are entitled to disability benefits as a disabled worker or as a person disabled since childhood, or, for monthly benefits payable for months after December 1990, as a disabled widow, widower, or surviving divorced spouse, there are a number of factors we consider in deciding whether your disability continues. We must determine if there has been any medical improvement in your impairment(s) and, if so, whether this medical improvement is related to your ability to work. If your impairment(s) has not medically improved we must consider whether one or more of the exceptions to medical improvement applies. If medical improvement related to your ability to work has not occurred and no exception applies, your benefits will continue. Even where medical improvement related to your ability to work has occurred or an exception applies, in most cases (see paragraph (e) of this section for exceptions), we must also show that you are currently able to engage in substantial gainful activity before we can find that you are no longer disabled.

(b) *Terms and definitions.* There are several terms and definitions which are important to know in order to understand how we review whether your disability continues. In addition, see paragraph (i) of this section if you work during your current period of entitlement based on disability or during certain other periods.

(1) *Medical improvement.* Medical improvement is any decrease in the medical severity of your impairment(s) which was present at the time of the most recent favorable medical decision that you were disabled or continued to be disabled. A determination that there has been a decrease in medical severity must be based on changes (improvement) in the symptoms, signs and/or laboratory findings associated with your impairment(s) (see § 404.1528).

Example 1: You were awarded disability benefits due to a herniated nucleus pulposus. At the time of our prior decision granting you benefits you had had a laminectomy. Postoperatively, a myelogram still shows evidence of a persistent deficit in your lumbar spine. You had pain in your back, and pain and a burning sensation in your right foot and leg. There were no muscle weakness

or neurological changes and a modest decrease in motion in your back and leg. When we reviewed your claim your treating physician reported that he had seen you regularly every 2 to 3 months for the past 2 years. No further myelograms had been done, complaints of pain in the back and right leg continued especially on sitting or standing for more than a short period of time. Your doctor further reported a moderately decreased range of motion in your back and right leg, but again no muscle atrophy or neurological changes were reported. Medical improvement has *not* occurred because there has been no decrease in the severity of your back impairment as shown by changes in symptoms, signs or laboratory findings.

Example 2: You were awarded disability benefits due to rheumatoid arthritis. At the time, laboratory findings were positive for this condition. Your doctor reported persistent swelling and tenderness of your fingers and wrists and that you complained of joint pain. Current medical evidence shows that while laboratory tests are still positive for rheumatoid arthritis, your impairment has responded favorably to therapy so that for the last year your fingers and wrists have not been significantly swollen or painful. Medical improvement has occurred because there has been a decrease in the severity of your impairment as documented by the current symptoms and signs reported by your physician. Although your impairment is subject to temporary remission and exacerbations, the improvement that has occurred has been sustained long enough to permit a finding of medical improvement. We would then determine if this medical improvement is related to your ability to work.

(2) *Medical improvement not related to ability to do work.* Medical improvement is not related to your ability to work if there has been a decrease in the severity of the impairment(s) as defined in paragraph (b)(1) of this section, present at the time of the most recent favorable medical decision, but *no* increase in your functional capacity to do basic work activities as defined in paragraph (b)(4) of this section. If there has been any medical improvement in your impairment(s), but it is not related to your ability to do work and none of the exceptions applies, your benefits will be continued.

Example: You are 65 inches tall and weighed 246 pounds at the time your disability was established. You had venous insufficiency and persistent edema in your legs. At the time, your ability to do basic work activities was affected because you were able to sit for 6 hours, but were able to stand or walk only occasionally. At the time of our continuing disability review, you had undergone a vein stripping operation. You now weigh 220 pounds and have intermittent edema. You are still able to sit for 6 hours at a time and to stand or walk only occasionally although you report less discomfort on walking. Medical improvement has occurred because there has been a decrease in the severity of the existing impairment as shown by your weight loss and the improvement in your edema. This medical improvement is not related to your ability to work, however, because your functional capacity to do basic work activities (*i.e.*, the ability to sit, stand and walk) has not increased.

(3) *Medical improvement that is related to ability to do work.* Medical improvement is related to your ability to work if there has been a decrease in the severity, as defined in paragraph (b)(1) of this section, of the impairment(s) present at the time of the most recent favorable medical decision *and* an increase in your functional capacity to do basic work activities as discussed in paragraph (b)(4) of this section. A determination that medical improvement related to your ability to do work has occurred does not, necessarily, mean that your disability will be found to have ended unless it is also shown that you are currently able to engage in substantial gainful activity as discussed in paragraph (b)(5) of this section.

Example 1: You have a back impairment and had a laminectomy to relieve the nerve root impingement and weakness in your left leg. At the time of our prior decision, basic work activities were affected because you were able to stand less than 6 hours, and sit no more than ½ hour at a time. You had a successful fusion operation on your back about 1 year before our review of your entitlement. At the time of our review, the weakness in your leg has decreased. Your functional capacity to perform basic work activities now is unimpaired because you now have no limitation on your ability to sit, walk, or stand. Medical improvement has occurred because there has been a decrease in the severity of your impairment as demonstrated by the decreased weakness in your leg. This medical improvement is related to your ability to work because there has also been an increase in your functional capacity to perform basic work activities (or residual functional capacity) as shown by the absence of limitation on your ability to sit, walk, or stand. Whether or not your disability is found to have ended, however, will depend on our determination as to whether you can

currently engage in substantial gainful activity.

Example 2: You were injured in an automobile accident receiving a compound fracture to your right femur and a fractured pelvis. When you applied for disability benefits 10 months after the accident your doctor reported that neither fracture had yet achieved solid union based on his clinical examination. X-rays supported this finding. Your doctor estimated that solid union and a subsequent return to full weight bearing would not occur for at least 3 more months. At the time of our review 6 months later, solid union had occurred and you had been returned to full weight-bearing for over a month. Your doctor reported this and the fact that your prior fractures no longer placed any limitation on your ability to walk, stand, lift, etc., and, that in fact, you could return to fulltime work if you so desired.

Medical improvement has occurred because there has been a decrease in the severity of your impairments as shown by X-ray and clinical evidence of solid union and your return to full weight-bearing. This medical improvement is related to your ability to work because you no longer meet the same listed impairment in appendix 1 of this subpart (see paragraph (c)(3)(i) of this section). In fact, you no longer have an impairment which is severe (see § 404.1521) and your disability will be found to have ended.

(4) *Functional capacity to do basic work activities.* Under the law, disability is defined, in part, as the inability to do any substantial gainful activity by reason of any medically determinable physical or mental impairment(s). In determining whether you are disabled under the law, we must measure, therefore, how and to what extent your impairment(s) has affected your ability to do work. We do this by looking at how your functional capacity for doing basic work activities has been affected. Basic work activities means the abilities and aptitudes necessary to do most jobs. Included are exertional abilities such as walking, standing, pushing, pulling, reaching and carrying, and nonexertional abilities and aptitudes such as seeing, hearing, speaking, remembering, using judgment, dealing with changes and dealing with both supervisors and fellow workers. A person who has no impairment(s) would be able to do all basic work activities at normal levels; he or she would have an unlimited functional capacity to do basic work activities. Depending on its nature and severity, an impairment will result in some limitation to the functional capacity to do one or more of these basic work activities. Diabetes, for example, can result in circulatory problems which could limit the length of time a person could stand or walk and damage to his or her eyes as well, so that the person also had limited vision. What a person can still do despite an impairment, is called his or her residual functional capacity. How the residual functional capacity is assessed is discussed in more detail in § 404.1545. Unless an impairment is so severe that it is deemed to prevent you from doing substantial gainful activity (see §§ 404.1525 and 404.1526), it is this residual functional capacity that is used to determine whether you can still do your past work or, in conjunction with your age, education and work experience, any other work.

(i) A decrease in the severity of an impairment as measured by changes (improvement) in symptoms, signs or laboratory findings can, if great enough, result in an increase in the functional capacity to do work activities. Vascular surgery (e.g., femoropopliteal bypass) may sometimes reduce the severity of the circulatory complications of diabetes so that better circulation results and the person can stand or walk for longer periods. When new evidence showing a change in signs, symptoms and laboratory findings establishes that both medical improvement has occurred and your functional capacity to perform basic work activities, or residual functional capacity, has increased, we say that medical improvement which is related to your ability to do work has occurred. A residual functional capacity assessment is also used to determine whether you can engage in substantial gainful activity and, thus, whether you continue to be disabled (see paragraph (b)(5) of this section).

(ii) Many impairment-related factors must be considered in assessing your functional capacity for basic work activities. Age is one key factor. Medical literature shows that there is a gradual decrease in organ function with age; that major losses and deficits become irreversible over time and that maximum exercise performance diminishes

with age. Other changes related to sustained periods of inactivity and the aging process include muscle atrophy, degenerative joint changes, decrease in range of motion, and changes in the cardiac and respiratory systems which limit the exertional range.

(iii) Studies have also shown that the longer an individual is away from the workplace and is inactive, the more difficult it becomes to return to ongoing gainful employment. In addition, a gradual change occurs in most jobs so that after about 15 years, it is no longer realistic to expect that skills and abilities acquired in these jobs will continue to apply to the current workplace. Thus, if you are age 50 or over and have been receiving disability benefits for a considerable period of time, we will consider this factor along with your age in assessing your residual functional capacity. This will ensure that the disadvantages resulting from inactivity and the aging process during a long period of disability will be considered. In some instances where available evidence does not resolve what you can or cannot do on a sustained basis, we will provide special work evaluations or other appropriate testing.

(5) *Ability to engage in substantial gainful activity*. In most instances, we must show that you are able to engage in substantial gainful activity before your benefits are stopped. When doing this, we will consider all your current impairments not just that impairment(s) present at the time of the most recent favorable determination. If we cannot determine that you are still disabled based on medical considerations alone (as discussed in §§ 404.1525 and 404.1526), we will use the new symptoms, signs and laboratory findings to make an objective assessment of your functional capacity to do basic work activities or residual functional capacity and we will consider your vocational factors. See §§ 404.1545 through 404.1569.

(6) *Evidence and basis for our decision*. Our decisions under this section will be made on a neutral basis without any initial inference as to the presence or absence of disability being drawn from the fact that you have previously been determined to be disabled. We will consider all evidence you submit, as well as all evidence we obtain from your treating physician(s) and other medical or nonmedical sources. What constitutes *evidence* and our procedures for obtaining it are set out in §§ 404.1512 through 404.1518. Our determination regarding whether your disability continues will be made on the basis of the weight of the evidence.

(7) *Point of comparison*. For purposes of determining whether medical improvement has occurred, we will compare the current medical severity of that impairment(s) which was present at the time of the most recent favorable medical decision that you were disabled or continued to be disabled to the medical severity of that impairment(s) at that time. If medical improvement has occurred, we will compare your current functional capacity to do basic work activities (*i.e.*, your residual functional capacity) based on this previously existing impairment(s) with your prior residual functional capacity in order to determine whether the medical improvement is related to your ability to do work. The most recent favorable medical decision is the latest decision involving a consideration of the medical evidence and the issue of whether you were disabled or continued to be disabled which became final.

(c) *Determining medical improvement and its relationship to your abilities to do work*. Paragraphs (b) (1) through (3) of this section discuss what we mean by medical improvement, medical improvement not related to your ability to work and medical improvement that is related to your ability to work. (In addition, see paragraph (i) of this section if you work during your current period of entitlement based on disability or during certain other periods.) How we will arrive at the decision that medical improvement has occurred and its relationship to the ability to do work, is discussed below.

(1) *Medical improvement*. Medical improvement is any decrease in the medical severity of impairment(s) present at the time of the most recent favorable medical decision that you were disabled or continued to be disabled and is determined by a comparison of prior and current medical evidence

which must show that there have been changes (improvement) in the symptoms, signs or laboratory findings associated with that impairment(s).

(2) *Determining if medical improvement is related to ability to work.* If there is a decrease in medical severity as shown by the symptoms, signs and laboratory findings, we then must determine if it is related to your ability to do work. In paragraph (b)(4) of this section, we explain the relationship between medical severity and limitation on functional capacity to do basic work activities (or residual functional capacity) and how changes in medical severity can affect your residual functional capacity. In determining whether medical improvement that has occurred is related to your ability to do work, we will assess your residual functional capacity (in accordance with paragraph (b)(4) of this section) based on the current severity of the impairment(s) which was present at your last favorable medical decision. Your new residual functional capacity will then be compared to your residual functional capacity at the time of our most recent favorable medical decision. Unless an increase in the current residual functional capacity is based on changes in the signs, symptoms, or laboratory findings, any medical improvement that has occurred will not be considered to be related to your ability to do work.

(3) Following are some additional factors and considerations which we will apply in making these determinations.

(i) *Previous impairment met or equaled listings.* If our most recent favorable decision was based on the fact that your impairment(s) at the time met or equaled the severity contemplated by the Listing of Impairments in appendix 1 of this subpart, an assessment of your residual functional capacity would not have been made. If medical improvement has occurred and the severity of the prior impairment(s) no longer meets or equals the same listing section used to make our most recent favorable decision, we will find that the medical improvement was related to your ability to work. Appendix 1 of this subpart describes impairments which, if severe enough, affect a person's ability to work. If the appendix level of severity is met or equaled, the individual is deemed, in the absence of evidence to the contrary, to be unable to engage in substantial gainful activity. If there has been medical improvement to the degree that the requirement of the listing section is no longer met or equaled, then the medical improvement is related to your ability to work. We must, of course, also establish that you can currently engage in gainful activity before finding that your disability has ended.

(ii) *Prior residual functional capacity assessment made.* The residual functional capacity assessment used in making the most recent favorable medical decision will be compared to the residual functional capacity assessment based on current evidence in order to determine if your functional capacity for basic work activities has increased. There will be no attempt made to reassess the prior residual functional capacity.

(iii) *Prior residual functional capacity assessment should have been made, but was not.* If the most recent favorable medical decision should have contained an assessment of your residual functional capacity (*i.e.*, your impairments did not meet or equal the level of severity contemplated by the Listing of Impairments in appendix 1 of this subpart) but does not, either because this assessment is missing from your file or because it was not done, we will reconstruct the residual functional capacity. This reconstructed residual functional capacity will accurately and objectively assess your functional capacity to do basic work activities. We will assign the maximum functional capacity consistent with an allowance.

Example: You were previously found to be disabled on the basis that "while your impairment did not meet or equal a listing, it did prevent you from doing your past or any other work." The prior adjudicator did not, however, include a residual functional capacity assessment in the rationale of this decision and a review of the prior evidence does not show that such an assessment was ever made. If a decrease in medical severity, *i.e.*, medical improvement, has occurred, the residual functional capacity based on the current level of severity of your impairment will have to be compared with your residual functional capacity based on its prior severity in order to determine if the medical improvement is related to your ability to do

work. In order to make this comparison, we will review the prior evidence and make an objective assessment of your residual functional capacity at the time of our most recent favorable medical determination, based on the symptoms, signs and laboratory findings as they then existed.

(iv) *Impairment subject to temporary remission.* In some cases the evidence shows that an individual's impairments are subject to temporary remission. In assessing whether medical improvement has occurred in persons with this type of impairment, we will be careful to consider the longitudinal history of the impairments, including the occurrence of prior remission, and prospects for future worsenings. Improvement in such impairments that is only temporary will not warrant a finding of medical improvement.

(v) *Prior file cannot be located.* If the prior file cannot be located, we will first determine whether you are able to now engage in substantial gainful activity based on all your current impairments. (In this way, we will be able to determine that your disability continues at the earliest point without addressing the often lengthy process of reconstructing prior evidence.) If you cannot engage in substantial gainful activity currently, your benefits will continue unless one of the second group of exceptions applies (see paragraph (e) of this section). If you are able to engage in substantial gainful activity, we will determine whether an attempt should be made to reconstruct those portions of the missing file that were relevant to our most recent favorable medical decision (e.g., work history, medical evidence from treating sources and the results of consultative examinations). This determination will consider the potential availability of old records in light of their age, whether the source of the evidence is still in operation; and whether reconstruction efforts will yield a complete record of the basis for the most recent favorable medical decision. If relevant parts of the prior record are not reconstructed either because it is determined not to attempt reconstruction or because such efforts fail, medical improvement cannot be found. The documentation of your current impairments will provide a basis for any future reviews. If the missing file is later found, it may serve as a basis for reopening any decision under this section in accordance with the rules in § 404.988.

(d) *First group of exceptions to medical improvement.* The law provides for certain limited situations when your disability can be found to have ended even though medical improvement has not occurred, if you can engage in substantial gainful activity. These exceptions to medical improvement are intended to provide a way of finding that a person is no longer disabled in those limited situations where, even though there has been no decrease in severity of the impairment(s), evidence shows that the person should no longer be considered disabled or never should have been considered disabled. If one of these exceptions applies, we must also show that, taking all your current impairment(s) into account, not just those that existed at the time of our most recent favorable medical decision, you are now able to engage in substantial gainful activity before your disability can be found to have ended. As part of the review process, you will be asked about any medical or vocational therapy you received or are receiving. Your answers and the evidence gathered as a result as well as all other evidence, will serve as the basis for the finding that an exception applies.

(1) *Substantial evidence shows that you are the beneficiary of advances in medical or vocational therapy or technology (related to your ability to work).* Advances in medical or vocational therapy or technology are improvements in treatment or rehabilitative methods which have increased your ability to do basic work activities. We will apply this exception when substantial evidence shows that you have been the beneficiary of services which reflect these advances and they have favorably affected the severity of your impairment or your ability to do basic work activities. This decision will be based on new medical evidence and a new residual functional capacity assessment. (See § 404.1545.) In many instances, an advanced medical therapy or technology will result in a decrease in severity as shown by symptoms, signs and laboratory findings which will meet the definition of medical improvement. This

exception will, therefore, see very limited application.

(2) *Substantial evidence shows that you have undergone vocational therapy (related to your ability to work).* Vocational therapy (related to your ability to work) may include, but is not limited to, additional education, training, or work experience that improves your ability to meet the vocational requirements of more jobs. This decision will be based on substantial evidence which includes new medical evidence and a new residual functional capacity assessment. (See §404.1545.) If, at the time of our review you have not completed vocational therapy which could affect the continuance of your disability, we will review your claim upon completion of the therapy.

Example 1: You were found to be disabled because the limitations imposed on you by your impairment allowed you to only do work that was at a sedentary level of exertion. Your prior work experience was work that required a medium level of exertion. Your age and education at the time would not have qualified you for work that was below this medium level of exertion. You enrolled in and completed a specialized training course which qualifies you for a job in data processing as a computer programmer in the period since you were awarded benefits. On review of your claim, current evidence shows that there is no medical improvement and that you can still do only sedentary work. As the work of a computer programmer is sedentary in nature, you are now able to engage in substantial gainful activity when your new skills are considered.

Example 2: You were previously entitled to benefits because the medical evidence and assessment of your residual functional capacity showed you could only do light work. Your prior work was considered to be heavy in nature and your age, education and the nature of your prior work qualified you for work which was no less than medium in exertion. The current evidence and residual functional capacity show there has been no medical improvement and that you can still do only light work. Since you were originally entitled to benefits, your vocational rehabilitation agency enrolled you in and you successfully completed a trade school course so that you are now qualified to do small appliance repair. This work is light in nature, so when your new skills are considered, you are now able to engage in substantial gainful activity even though there has been no change in your residual functional capacity.

(3) *Substantial evidence shows that based on new or improved diagnostic or evaluative techniques your impairment(s) is not as disabling as it was considered to be at the time of the most recent favorable decision.* Changing methodologies and advances in medical and other diagnostic or evaluative techniques have given, and will continue to give, rise to improved methods for measuring and documenting the effect of various impairments on the ability to do work. Where, by such new or improved methods, substantial evidence shows that your impairment(s) is not as severe as was determined at the time of our most recent favorable medical decision, such evidence may serve as a basis for finding that you are no longer disabled, if you can currently engage in substantial gainful activity. In order to be used under this exception, however, the new or improved techniques must have become generally available after the date of our most recent favorable medical decision.

(i) *How we will determine which methods are new or improved techniques and when they become generally available.* New or improved diagnostic techniques or evaluations will come to our attention by several methods. In reviewing cases, we often become aware of new techniques when their results are presented as evidence. Such techniques and evaluations are also discussed and acknowledged in medical literature by medical professional groups and other governmental entities. Through these sources, we develop listings of new techniques and when they become generally available. For example, we will consult the Health Care Financing Administration for its experience regarding when a technique is recognized for payment under Medicare and when they began paying for the technique.

(ii) *How you will know which methods are new or improved techniques and when they become generally available.* We will let you know which methods we consider to be new or improved techniques and when they become available through two vehicles.

(A) Some of the future changes in the Listing of Impairments in appendix 1 of this subpart will be based on new or improved diagnostic or evaluative techniques. Such listings changes will

clearly state this fact as they are published as Notices of Proposed Rulemaking and the new or improved technique will be considered generally available as of the date of the final publication of that particular listing in the FEDERAL REGISTER.

(B) A cumulative list since 1970 of new or improved diagnostic techniques or evaluations, how they changed the evaluation of the applicable impairment and the month and year they became generally available, will be published in the *Notices* section of the FEDERAL REGISTER. Included will be any changes in the Listing of Impairments published in the Code of Federal Regulations since 1970 which are reflective of new or improved techniques. No cases will be processed under this exception until this cumulative listing is so published. Subsequent changes to the list will be published periodically. The period will be determined by the volume of changes needed.

Example: The electrocardiographic exercise test has replaced the Master's 2-step test as a measurement of heart function since the time of your last favorable medical decision. Current evidence could show that your condition, which was previously evaluated based on the Master's 2-step test, is not now as disabling as was previously thought. If, taking all your current impairments into account, you are now able to engage in substantial gainful activity, this exception would be used to find that you are no longer disabled even if medical improvement has not occurred.

(4) *Substantial evidence demonstrates that any prior disability decision was in error.* We will apply the exception to medical improvement based on error if substantial evidence (which may be evidence on the record at the time any prior determination of the entitlement to benefits based on disability was made, or newly obtained evidence which relates to that determination) demonstrates that a prior determination was in error. A prior determination will be found in error only if:

(i) Substantial evidence shows on its face that the decision in question should not have been made (e.g., the evidence in your file such as pulmonary function study values was misread or an adjudicative standard such as a listing in appendix 1 or a medical/vocational rule in appendix 2 of this subpart was misapplied).

Example 1: You were granted benefits when it was determined that your epilepsy met Listing 11.02. This listing calls for a finding of major motor seizures more frequently than once a month as documented by EEG evidence and by a detailed description of a typical seizure pattern. A history of either diurnal episodes or nocturnal episodes with residuals interfering with daily activities is also required. On review, it is found that a history of the frequency of your seizures showed that they occurred only once or twice a year. The prior decision would be found to be in error, and whether you were still considered to be disabled would be based on whether you could currently engage in substantial gainful activity.

Example 2: Your prior award of benefits was based on vocational rule 201.12 in appendix 2 of this subpart. This rule applies to a person age 50–54 who has at least a high school education, whose previous work was entirely at a semiskilled level, and who can do only sedentary work. On review, it is found that at the time of the prior determination you were actually only age 46 and vocational rule 201.21 should have been used. This rule would have called for a denial of your claim and the prior decision is found to have been in error. Continuation of your disability would depend on a finding of your current ability to engage in substantial gainful activity.

(ii) At the time of the prior evaluation, required and material evidence of the severity of your impairment(s) was missing. That evidence becomes available upon review, and substantial evidence demonstrates that had such evidence been present at the time of the prior determination, disability would not have been found.

Example: You were found disabled on the basis of chronic obstructive pulmonary disease. The severity of your impairment was documented primarily by pulmonary function testing results. The evidence showed that you could do only light work. Spirometric tracings of this testing, although required, were not obtained, however. On review, the original report is resubmitted by the consultative examining physician along with the corresponding spirometric tracings. A review of the tracings shows that the test was invalid. Current pulmonary function testing supported by spirometric tracings reveals that your impairment does not limit your ability to perform basic work activities in any way. Error is found based on the fact that required, material evidence which was originally missing now becomes available and shows that if it had been available at the

time of the prior determination, disability would not have been found.

(iii) Substantial evidence which is new evidence which relates to the prior determination (of allowance or continuance) refutes the conclusions that were based upon the prior evidence (e.g., a tumor thought to be malignant was later shown to have actually been benign). Substantial evidence must show that had the new evidence (which relates to the prior determination) been considered at the time of the prior decision, the claim would not have been allowed or continued. A substitution of current judgment for that used in the prior favorable decision will not be the basis for applying this exception.

Example: You were previously found entitled to benefits on the basis of diabetes mellitus which the prior adjudicator believed was equivalent to the level of severity contemplated in the Listing of Impairments. The prior record shows that you had ''brittle'' diabetes for which you were taking insulin. Your urine was 3+ for sugar, and you alleged occasional hypoglycemic attacks caused by exertion. On review, symptoms, signs and laboratory findings are unchanged. The current adjudicator feels, however, that your impairment clearly does not equal the severity contemplated by the listings. Error *cannot* be found because it would represent a substitution of current judgment for that of the prior adjudicator that your impairment equaled a listing.

(iv) The exception for error will not be applied retroactively under the conditions set out above unless the conditions for reopening the prior decision (see §404.988) are met.

(5) *You are currently engaging in substantial gainful activity.* If you are currently engaging in substantial gainful activity before we determine whether you are no longer disabled because of your work activity, we will consider whether you are entitled to a trial work period as set out in §404.1592. We will find that your disability has ended in the month in which you demonstrated your ability to engage in substantial gainful activity (following completion of a trial work period, where it applies). This exception does not apply in determining whether you continue to have a disabling impairment(s) (§404.1511) for purposes of deciding your eligibility for a reentitlement period (§404.1592a).

(e) *Second group of exceptions to medical improvement.* In addition to the first group of exceptions to medical improvement, the following exceptions may result in a determination that you are no longer disabled. In these situations the decision will be made without a determination that you have medically improved or can engage in substantial gainful activity.

(1) *A prior determination or decision was fraudulently obtained.* If we find that any prior favorable determination or decision was obtained by fraud, we may find that you are not disabled. In addition, we may reopen your claim under the rules in §404.988. In determining whether a prior favorable determination or decision was fraudulently obtained, we will take into account any physical, mental, educational, or linguistic limitations (including any lack of facility with the English language) which you may have had at the time.

(2) *You do not cooperate with us.* If there is a question about whether you continue to be disabled and we ask you to give us medical or other evidence or to go for a physical or mental examination by a certain date, we will find that your disability has ended if you fail, without good cause, to do what we ask. Section 404.911 explains the factors we consider and how we will determine generally whether you have good cause for failure to cooperate. In addition, §404.1518 discusses how we determine whether you have good cause for failing to attend a consultative examination. The month in which your disability ends will be the first month in which you failed to do what we asked.

(3) *We are unable to find you.* If there is a question about whether you continue to be disabled and we are unable to find you to resolve the question, we will determine that your disability has ended. The month your disability ends will be the first month in which the question arose and we could not find you.

(4) *You fail to follow prescribed treatment which would be expected to restore*

your ability to engage in substantial gainful activity. If treatment has been prescribed for you which would be expected to restore your ability to work, you must follow that treatment in order to be paid benefits. If you are not following that treatment and you do not have good cause for failing to follow that treatment, we will find that your disability has ended (see § 404.1530(c)). The month your disability ends will be the first month in which you failed to follow the prescribed treatment.

(f) *Evaluation steps*. To assure that disability reviews are carried out in a uniform manner, that decisions of continuing disability can be made in the most expeditious and administratively efficient way, and that any decisions to stop disability benefits are made objectively, neutrally and are fully documented, we will follow specific steps in reviewing the question of whether your disability continues. Our review may cease and benefits may be *continued* at any point if we determine there is sufficient evidence to find that you are still unable to engage in substantial gainful activity. The steps are as follows. (See paragraph (i) of this section if you work during your current period of entitlement based on disability or during certain other periods.)

(1) Are you engaging in substantial gainful activity? If you are (and any applicable trial work period has been completed), we will find disability to have ended (see paragraph (d)(5) of this section).

(2) If you are not, do you have an impairment or combination of impairments which meets or equals the severity of an impairment listed in appendix 1 of this subpart? If you do, your disability will be found to continue.

(3) If you do not, has there been medical improvement as defined in paragraph (b)(1) of this section? If there has been medical improvement as shown by a decrease in medical severity, see step (4). If there has been no decrease in medical severity, there has been no medical improvement. (See step (5).)

(4) If there has been medical improvement, we must determine whether it is related to your ability to do work in accordance with paragraphs (b) (1) through (4) of this section; *i.e.*, whether or not there has been an increase in the residual functional capacity based on the impairment(s) that was present at the time of the most recent favorable medical determination. If medical improvement is *not* related to your ability to do work, see step (5). If medical improvement *is* related to your ability to do work, see step (6).

(5) If we found at step (3) that there has been no medical improvement or if we found at step (4) that the medical improvement is not related to your ability to work, we consider whether any of the exceptions in paragraphs (d) and (e) of this section apply. If none of them apply, your disability will be found to continue. If one of the first group of exceptions to medical improvement applies, see step (6). If an exception from the second group of exceptions to medical improvement applies, your disability will be found to have ended. The second group of exceptions to medical improvement may be considered at any point in this process.

(6) If medical improvement is shown to be related to your ability to do work or if one of the first group of exceptions to medical improvement applies, we will determine whether all your current impairments in combination are severe (see § 404.1521). This determination will consider all your current impairments and the impact of the combination of those impairments on your ability to function. If the residual functional capacity assessment in step (4) above shows significant limitation of your ability to do basic work activities, see step (7). When the evidence shows that all your current impairments in combination do not significantly limit your physical or mental abilities to do basic work activities, these impairments will not be considered severe in nature. If so, you will no longer be considered to be disabled.

(7) If your impairment(s) is severe, we will assess your current ability to do substantial gainful activity in accordance with § 404.1560. That is, we will assess your residual functional capacity based on all your current impairments and consider whether you can still do work you have done in the past. If you can do such work, disability will be found to have ended.

(8) If you are not able to do work you have done in the past, we will consider whether you can do other work given the residual functional capacity assessment made under paragraph (f)(7) of this section and your age, education, and past work experience (*see* paragraph (f)(9) of this section for an exception to this rule). If you can, we will find that your disability has ended. If you cannot, we will find that your disability continues.

(9) We may proceed to the final step, described in paragraph (f)(8) of this section, if the evidence in your file about your past relevant work is not sufficient for us to make a finding under paragraph (f)(7) of this section about whether you can perform your past relevant work. If we find that you can adjust to other work based solely on your age, education, and residual functional capacity, we will find that you are no longer disabled, and we will not make a finding about whether you can do your past relevant work under paragraph (f)(7) of this section. If we find that you may be unable to adjust to other work or if §404.1562 may apply, we will assess your claim under paragraph (f)(7) of this section and make a finding about whether you can perform your past relevant work.

(g) *The month in which we will find you are no longer disabled.* If the evidence shows that you are no longer disabled, we will find that your disability ended in the earliest of the following months.

(1) The month the evidence shows you are no longer disabled under the rules set out in this section, and you were disabled only for a specified period of time in the past;

(2) The month the evidence shows you are no longer disabled under the rules set out in this section, but not earlier than the month in which we mail you a notice saying that the information we have shows that you are not disabled;

(3) The month in which you demonstrated your ability to engage in substantial gainful activity (following completion of a trial work period); however, we may pay you benefits for certain months in and after the reentitlement period which follows the trial work period. (See §404.1592a for a discussion of the reentitlement period. If you are receiving benefits on your own earnings record, see §404.316 for when your benefits will end. See §404.352 if you are receiving benefits on a parent's earnings as a disabled adult child.);

(4) The month in which you actually do substantial gainful activity (where you are not entitled to a trial work period);

(5) The month in which you return to full-time work, with no significant medical restrictions and acknowledge that medical improvement has occurred, and we expected your impairment(s) to improve (see §404.1591);

(6) The first month in which you failed without good cause to do what we asked, when the rule set out in paragraph (e)(2) of this section applies;

(7) The first month in which the question of continuing disability arose and we could not find you, when the rule set out in paragraph (e)(3) of this section applies;

(8) The first month in which you failed without good cause to follow prescribed treatment, when the rule set out in paragraph (e)(4) of this section applies; or

(9) The first month you were told by your physician that you could return to work, provided there is no substantial conflict between your physician's and your statements regarding your awareness of your capacity for work and the earlier date is supported by substantial evidence.

(h) *Before we stop your benefits.* Before we stop your benefits or a period of disability, we will give you a chance to explain why we should not do so. Sections 404.1595 and 404.1597 describe your rights (including appeal rights) and the procedures we will follow.

(i) *If you work during your current period of entitlement based on disability or during certain other periods.* (1) We will not consider the work you are doing or have done during your current period of entitlement based on disability (or, when determining whether you are entitled to expedited reinstatement of benefits under section 223(i) of the Act, the work you are doing or have done during or after the previously terminated period of entitlement referred to in section 223(i)(1)(B) of the Act) to be past relevant work under paragraph

(f)(7) of this section or past work experience under paragraph (f)(8) of this section. In addition, if you are currently entitled to disability benefits under title II of the Social Security Act, we may or may not consider the physical and mental activities that you perform in the work you are doing or have done during your current period of entitlement based on disability, as explained in paragraphs (i)(2) and (3) of this section.

(2) If you are currently entitled to disability insurance benefits as a disabled worker, child's insurance benefits based on disability, or widow's or widower's insurance benefits based on disability under title II of the Social Security Act, and at the time we are making a determination on your case you have received such benefits for at least 24 months, we will not consider the activities you perform in the work you are doing or have done during your current period of entitlement based on disability if they support a finding that your disability has ended. (We will use the rules in § 404.1590(i)(2) to determine whether the 24-month requirement is met.) However, we will consider the activities you do in that work if they support a finding that your disability continues or they do not conflict with a finding that your disability continues. We will not presume that you are still disabled if you stop working.

(3) If you are not a person described in paragraph (i)(2) of this section, we will consider the activities you perform in your work at any of the evaluation steps in paragraph (f) of this section at which we need to assess your ability to function.

[50 FR 50130, Dec. 6, 1985; 51 FR 7063, Feb. 28, 1986; 51 FR 16015, Apr. 30, 1986, as amended at 52 FR 44971, Nov. 24, 1987; 57 FR 30121, July 8, 1992; 59 FR 1635, Jan. 12, 1994; 65 FR 42788, July 11, 2000; 68 FR 51163, Aug. 26, 2003; 71 FR 66857, Nov. 17, 2006; 77 FR 43495, July 25, 2012]

§ 404.1595 When we determine that you are not now disabled.

(a) *When we will give you advance notice.* Except in those circumstances described in paragraph (d) of this section, we will give you advance notice when we have determined that you are not now disabled because the information we have conflicts with what you have told us about your disability. If your dependents are receiving benefits on your Social Security number and do not live with you, we will also give them advance notice. To give you advance notice, we will contact you by mail, telephone or in person.

(b) *What the advance notice will tell you.* We will give you a summary of the information we have. We will also tell you why we have determined that you are not now disabled, and will give you a chance to reply. If it is because of—

(1) *Medical reasons.* The advance notice will tell you what the medical information in your file shows;

(2) *Your work activity.* The advance notice will tell you what information we have about the work you are doing or have done, and why this work shows that you are not disabled; or

(3) *Your failure to give us information we need or do what we ask.* The advance notice will tell you what information we need and why we need it or what you have to do and why.

(c) *What you should do if you receive an advance notice.* If you agree with the advance notice, you do not need to take any action. If you desire further information or disagree with what we have told you, you should immediately write or telephone the State agency or the social security office that gave you the advance notice or you may visit any social security office. If you believe you are now disabled, you should tell us why. You may give us any additional or new information, including reports from your doctors, hospitals, employers or others, that you believe we should have. You should send these as soon as possible to the local social security office or to the office that gave you the advance notice. We consider 10 days to be enough time for you to tell us, although we will allow you more time if you need it. You will have to ask for additional time beyond 10 days if you need it.

(d) *When we will not give you advance notice.* We will not give you advance notice when we determine that you are not disabled if—

(1) We recently told you that the information we have shows that you are not now disabled, that we were gathering more information, and that your benefits will stop; or

(2) We are stopping your benefits because you told us you are not now disabled; or

(3) We recently told you that continuing your benefits would probably cause us to overpay you and you asked us to stop your benefits.

§ 404.1596 Circumstances under which we may suspend and terminate your benefits before we make a determination.

(a) *General.* Under some circumstances, we may stop your benefits before we make a determination. Generally, we do this when the information we have clearly shows you are not now disabled but we cannot determine when your disability ended. These situations are described in paragraph (b)(1) and other reasons are given in paragraph (b)(2) of this section. We refer to this as a suspension of benefits. Your benefits, as well as those of your dependents (regardless of where they receive their benefits), may be suspended. When we do this we will give you advance notice. (See § 404.1595.) We will contact your spouse and children if they are receiving benefits on your Social Security number, and the benefits are being mailed to an address different from your own.

(b) *When we will suspend your benefits*—(1) *You are not now disabled.* We will suspend your benefits if the information we have clearly shows that you are not disabled and we will be unable to complete a determination soon enough to prevent us from paying you more monthly benefits than you are entitled to. This may occur when—

(i) New medical or other information clearly shows that you are able to do substantial gainful activity and your benefits should have stopped more than 2 months ago;

(ii) You completed a 9-month period of trial work more than 2 months ago and you are still working;

(iii) At the time you filed for benefits your condition was expected to improve and you were expected to be able to return to work. You subsequently did return to work more than 2 months ago with no significant medical restrictions; or

(iv) You are not entitled to a trial work period and you are working.

(2) *Other reasons.* We will also suspend your benefits if—

(i) You have failed to respond to our request for additional medical or other evidence and we are satisfied that you received our request and our records show that you should be able to respond; or

(ii) We are unable to locate you and your checks have been returned by the Post Office as undeliverable.

(c) *When we will not suspend your cash benefits.* We will not suspend your cash benefits if—

(1) You have become disabled by another impairment; or

(2) Even though your impairment is no longer disabling,

(i) You are participating in an appropriate program of vocational rehabilitation services, employment services, or other support services, as described in § 404.327(a) and (b);

(ii) You began participating in the program before the date your disability ended; and

(iii) We have determined under § 404.328 that your completion of the program, or your continuation in the program for a specified period of time, will increase the likelihood that you will not have to return to the disability benefit rolls.

(d) *When the suspension is effective.* We will suspend your benefits effective with the month in which it is determined in accordance with paragraph (b)(2)(i) of this section that your disability benefits should stop due to your failure, without good cause (see § 404.911), to comply with our request for necessary information for your continuing disability review. This review is to determine whether or not you continue to meet the disability requirements of the law. When we have received the information, we will reinstate your benefits for any previous month for which they are otherwise payable, and continue with the CDR process.

(e) *When we will terminate your benefits.* We will terminate your benefits following 12 consecutive months of benefit suspension because you did not comply with our request for information in accordance with paragraph (b)(2)(i) of this section. We will count the 12-month suspension period from

the start of the first month that you stopped receiving benefits (see paragraph (d) of this section). This termination is effective with the start of the 13th month after the suspension began because you failed to cooperate.

[45 FR 55584, Aug. 20, 1980, as amended at 47 FR 31543, July 21, 1982; 47 FR 52693, Nov. 23, 1982; 51 FR 17617, May 14, 1986; 68 FR 40123, July 7, 2003; 70 FR 36507, June 24, 2005; 71 FR 60822, Oct. 17, 2006]

§ 404.1597 After we make a determination that you are not now disabled.

(a) *General.* If we determine that you do not meet the disability requirements of the law, your benefits generally will stop. We will send you a formal written notice telling you why we believe you are not disabled and when your benefits should stop. If your spouse and children are receiving benefits on your social security number, we will also stop their benefits and tell them why. The notices will explain your right to reconsideration if you disagree with our determination. However, your benefits may continue even though your impairment is no longer disabling, if you are participating in an appropriate program of vocational rehabilitation services, employment services, or other support services (see § 404.327). You must have started participating in the program before the date your disability ended. In addition, we must have determined that your completion of the program, or your continuation in the program for a specified period of time, will increase the likelihood that you will not have to return to the disability benefit rolls. (See §§ 404.316(c), 404.328, 404.337(c), 404.352(d), and 404.1586(g).) You may still appeal our determination that you are not disabled even though your benefits are continuing because of your participation in an appropriate program of vocational rehabilitation services, employment services, or other support services. You may also appeal a determination that your completion of the program, or your continuation in the program for a specified period of time, will not increase the likelihood that you will not have to return to the disability benefit rolls and, therefore, you are not entitled to continue to receive benefits.

(b) *If we make a determination that your physical or mental impairment(s) has ceased, did not exist, or is no longer disabling (Medical Cessation Determination).* If we make a determination that the physical or mental impairment(s) on the basis of which benefits were payable has ceased, did not exist, or is no longer disabling (a medical cessation determination), your benefits will stop. As described in paragraph (a) of this section, you will receive a written notice explaining this determination and the month your benefits will stop. The written notice will also explain your right to appeal if you disagree with our determination and your right to request that your benefits and the benefits, if any, of your spouse or children, be continued under § 404.1597a. For the purpose of this section, *benefits* means disability cash payments and/or Medicare, if applicable. The continued benefit provisions of this section do not apply to an initial determination on an application for disability benefits, or to a determination that you were disabled only for a specified period of time.

[47 FR 31544, July 21, 1982, as amended at 51 FR 17618, May 14, 1986; 53 FR 29020, Aug. 2, 1988; 53 FR 39015, Oct. 4, 1988; 70 FR 36507, June 24, 2005]

§ 404.1597a Continued benefits pending appeal of a medical cessation determination.

(a) *General.* If we determine that you are not entitled to benefits because the physical or mental impairment(s) on the basis of which such benefits were payable is found to have ceased, not to have existed, or to no longer be disabling, and you appeal that determination, you may choose to have your benefits continued pending reconsideration and/or a hearing before an administrative law judge on the disability cessation determination. For the purpose of this entire section, the election of *continued benefits* means the election of disability cash payments and/or Medicare, if applicable. You can also choose to have the benefits continued for anyone else receiving benefits based on your wages and self-employment income (and anyone else receiving benefits because of your entitlement to benefits based on disability). If you appeal

a medical cessation under both title II and title XVI (a concurrent case), the title II claim will be handled in accordance with title II regulations while the title XVI claim will be handled in accordance with the title XVI regulations.

(b) *When the provisions of this section are available.* (1) Benefits may be continued under this section only if the determination that your physical or mental impairment(s) has ceased, has never existed, or is no longer disabling is made on or after January 12, 1983 (or before January 12, 1983, and a timely request for reconsideration or a hearing before an administrative law judge is pending on that date).

(2) Benefits may be continued under this section only for months beginning with January 1983, or the first month for which benefits are no longer otherwise payable following our determination that your physical or mental impairment(s) has ceased, has never existed, or is no longer disabling, whichever is later.

(3) Continued payment of benefits under this section will stop effective with the earlier of:

(i) The month before the month in which an administrative law judge's hearing decision finds that your physical or mental impairment(s) has ceased, has never existed, or is no longer disabling or the month before the month of a new administrative law judge decision (or final action by the Appeals Council on the administrative law judge's recommended decision) if your case was sent back to an administrative law judge for further action; or

(ii) The month before the month no timely request for a reconsideration or a hearing before an administrative law judge is pending. These continued benefits may be stopped or adjusted because of certain events (such as work and earnings or receipt of worker's compensation) which occur while you are receiving these continued benefits and affect your right to receive continued benefits.

(c) *Continuation of benefits for anyone else pending your appeal.* (1) When you file a request for reconsideration or hearing before an administrative law judge on our determination that your physical or mental impairment(s) has ceased, has never existed, or is no longer disabling, or your case has been sent back (remanded) to an administrative law judge for further action, you may also choose to have benefits continue for anyone else who is receiving benefits based on your wages and self-employment income (and for anyone else receiving benefits because of your entitlement to benefits based on disability), pending the outcome of your appeal.

(2) If anyone else is receiving benefits based on your wages and self-employment income, we will notify him or her of the right to choose to have his or her benefits continue pending the outcome of your appeal. Such benefits can be continued for the time period in paragraph (b) of this section only if he or she chooses to have benefits continued and you also choose to have his or her benefits continued.

(d) *Statement of choice.* When you or another party request reconsideration under §404.908(a) or a hearing before an administrative law judge under §404.932(a) on our determination that your physical or mental impairment(s) has ceased, has never existed, or is no longer disabling, or if your case is sent back (remanded) to an administrative law judge for further action, we will explain your right to receive continued benefits and ask you to complete a statement specifying which benefits you wish to have continued pending the outcome of the reconsideration or hearing before an administrative law judge. You may elect to receive only Medicare benefits during appeal even if you do not want to receive continued disability benefits. If anyone else is receiving benefits based on your wages and self-employment income (or because of your entitlement to benefits based on disability), we will ask you to complete a statement specifying which benefits you wish to have continued for them, pending the outcome of the request for reconsideration or hearing before an administrative law judge. If you request appeal but you do not want to receive continued benefits, we will ask you to complete a statement declining continued benefits indicating that you do not want to have your benefits and those of your family, if any, continued during the appeal.

(e) *Your spouse's or children's statement of choice.* If you request, in accordance with paragraph (d) of this section, that benefits also be continued for anyone who had been receiving benefits based on your wages and self-employment, we will send them a written notice. The notice will explain their rights and ask them to complete a statement either declining continued benefits, or specifying which benefits they wish to have continued, pending the outcome of the request for reconsideration or a hearing before an administrative law judge.

(f) *What you must do to receive continued benefits pending notice of our reconsideration determination.* (1) If you want to receive continued benefits pending the outcome of your request for reconsideration, you must request reconsideration and continuation of benefits no later than 10 days after the date you receive the notice of our initial determination that your physical or mental impairment(s) has ceased, has never existed, or is no longer disabling. Reconsideration must be requested as provided in § 404.909, and you must request continued benefits using a statement in accordance with paragraph (d) of this section.

(2) If you fail to request reconsideration and continued benefits within the 10-day period required by paragraph (f)(1) of this section, but later ask that we continue your benefits pending a reconsidered determination, we will use the rules in § 404.911 to determine whether good cause exists for your failing to request benefit continuation within 10 days after receipt of the notice of the initial cessation determination. If you request continued benefits after the 10-day period, we will consider the request to be timely and will pay continued benefits only if good cause for delay is established.

(g) *What you must do to receive continued benefits pending an administrative law judge's decision.* (1) To receive continued benefits pending an administrative law judge's decision on our reconsideration determination, you must request a hearing and continuation of benefits no later than 10 days after the date you receive the notice of our reconsideration determination that your physical or mental impairment(s) has ceased, has never existed, or is no longer disabling. A hearing must be requested as provided in § 404.933, and you must request continued benefits using a statement in accordance with paragraph (d) of this section.

(2) If you request continued benefits pending an administrative law judge's decision but did not request continued benefits while we were reconsidering the initial cessation determination, your benefits will begin effective the month of the reconsideration determination.

(3) If you fail to request continued payment of benefits within the 10-day period required by paragraph (g)(1) of this section, but you later ask that we continue your benefits pending an administrative law judge's decision on our reconsidered determination, we will use the rules as provided in § 404.911 to determine whether good cause exists for your failing to request benefit continuation within 10 days after receipt of the reconsideration determination. If you request continued benefits after the 10-day period, we will consider the request to be timely and will pay continued benefits only if good cause for delay is established.

(h) *What anyone else must do to receive continued benefits pending our reconsideration determination or an administrative law judge's decision.* (1) When you or another party (see §§ 404.908(a) and 404.932(a)) request a reconsideration or a hearing before an administrative law judge on our medical cessation determination or when your case is sent back (remanded) to an administrative law judge for further action, you may choose to have benefits continue for anyone else who is receiving benefits based on your wages and self-employment income. An eligible individual must also choose whether or not to have his or her benefits continue pending your appeal by completing a separate statement of election as described in paragraph (e) of this section.

(2) He or she must request continuation of benefits no later than 10 days after the date he or she receives notice of termination of benefits. He or she will then receive continued benefits beginning with the later of January 1983, or the first month for which benefits

are no longer otherwise payable following our initial or reconsideration determination that your physical or mental impairment(s) has ceased, has never existed, or is no longer disabling. Continued benefits will continue until the earlier of:

(i) The month before the month in which an administrative law judge's hearing decision finds that your physical or mental impairment(s) has ceased, has never existed, or is no longer disabling or the month before the month of the new administrative law judge decision (or final action is taken by the Appeals Council on the administrative law judge's recommended decision) if your case was sent back to an administrative law judge for further action; or

(ii) The month before the month no timely request for a reconsideration or a hearing before an administrative law judge is pending. These continued benefits may be stopped or adjusted because of certain events (such as work and earnings or payment of worker's compensation) which occur while an eligible individual is receiving continued benefits and affect his or her right to receive continued benefits.

(3) If he or she fails to request continuation of benefits within the 10-day period required by this paragraph, but requests continuation of benefits at a later date, we will use the rules as provided in § 404.911 to determine whether good cause exists for his or her failure to request continuation of benefits within 10 days after receipt of the notice of termination of his or her benefits. His or her late request will be considered to be timely and we will pay him or her continued benefits only if good cause for delay is established.

(4) If you choose not to have benefits continued for anyone else who is receiving benefits based on your wages and self-employment income, pending the appeal on our determination, we will not continue benefits to him or her.

(i) *What you must do when your case is remanded to an administrative law judge.* If we send back (remand) your case to an administrative law judge for further action under the rules provided in § 404.977, and the administrative law judge's decision or dismissal order issued on your medical cessation appeal is vacated and is no longer in effect, continued benefits are payable pending a new decision by the administrative law judge or final action is taken by the Appeals Council on the administrative law judge's recommended decision.

(1) If you (and anyone else receiving benefits based on your wages and self-employment income or because of your disability) previously elected to receive continued benefits pending the administrative law judge's decision, we will automatically start these same continued benefits again. We will send you a notice telling you this, and that you do not have to do anything to have these same benefits continued until the month before the month the new decision of order of dismissal is issued by the administrative law judge or until the month before the month the Appeals Council takes final action on the administrative law judge's recommended decision. These benefits will begin again with the first month of nonpayment based on the prior administrative law judge hearing decision or dismissal order. Our notice explaining reinstatement of continued benefits will also tell you to report to us any changes or events that affect your receipt of benefits.

(2) After we automatically reinstate your continued benefits as described in paragraph (h)(1) of this section, we will contact you to determine if any adjustment is required to the amount of continued benefits payable due to events that affect the right to receive benefits involving you, your spouse and/or children. If you have returned to work, we will request additional information about this work activity. If you are working, your continued benefits will not be stopped while your appeal of the medical cessation of disability is still pending unless you have completed a trial work period and are engaging in substantial gainful activity. In this event, we will suspend your continued benefits. If any other changes have occurred which would require a reduction in benefit amounts, or nonpayment of benefits, we will send an advance notice to advise of any adverse change before the adjustment action is taken. The notice will also advise you of the

right to explain why these benefits should not be adjusted or stopped. You will also receive a written notice of our determination. The notice will also explain your right to reconsideration if you disagree with this determination.

(3) If the final decision on your appeal of your medical cessation is a favorable one, we will send you a written notice in which we will advise you of your right to benefits, if any, before you engaged in substantial gainful activity and to reentitlement should you stop performing substantial gainful activity. If you disagree with our determination, you will have the right to appeal this decision.

(4) If the final decision on your appeal of your medical cessation is an unfavorable one (the cessation is affirmed), you will also be sent a written notice advising you of our determination, and your right to appeal if you think we are wrong.

(5) If you (or the others receiving benefits based on your wages and self-employment income or because of your disability) did not previously elect to have benefits continued pending an administrative law judge decision, and you now want to elect continued benefits, you must request to do so no later than 10 days after you receive our notice telling you about continued benefits. If you fail to request continued benefits within the 10-day period required by paragraph (f)(1) of this section, but later ask that we continue your benefits pending an administrative law judge remand decision, we will use the rules in § 404.911 to determine whether good cause exists for your failing to request benefit continuation within 10 days after receipt of the notice telling you about benefit continuation. We will consider the request to be timely and will pay continued benefits only if good cause for delay is established. If you make this new election, benefits may begin with the month of the order sending (remanding) your case back to the administrative law judge. Before we begin to pay you continued benefits as described in paragraph (h)(1) of this section we will contact you to determine if any adjustment is required to the amount of continued benefits payable due to events which may affect your right to benefits. If you have returned to work, we will request additional information about this work activity. If you are working, continued benefits may be started and will not be stopped because of your work while your appeal of the medical cessation of your disability is still pending unless you have completed a trial work period and are engaging in substantial gainful activity. If any changes have occurred which establish a basis for not paying continued benefits or a reduction in benefit amount, we will send you a notice explaining the adjustment or the reason why we cannot pay continued benefits. The notice will also explain your right to reconsideration if you disagree with this determination. If the final decision on your appeal of your medical cessation is a favorable one, we will send you a written notice in which we will advise you of your right to benefits, if any, before you engaged in substantial gainful activity and to reentitlement should you stop performing substantial gainful activity. If you disagree with our determination, you will have the right to appeal this decision. If the final decision on your appeal of your medical cessation is an unfavorable one (the cessation is affirmed), you will also be sent a written notice advising you of our determination, and your right to appeal if you think we are wrong.

(6) If a court orders that your case be sent back to us (remanded) and your case is sent to an administrative law judge for further action under the rules provided in § 404.983, the administrative law judge's decision or dismissal order on your medical cessation appeal is vacated and is no longer in effect. Continued benefits are payable to you and anyone else receiving benefits based on your wages and self-employment income or because of your disability pending a new decision by the administrative law judge or final action is taken by the Appeals Council on the administrative law judge's recommended decision. In these court-remanded cases reaching the administrative law judge, we will follow the same rules provided in paragraphs (i) (1), (2), (3), (4) and (5) of this section.

(j) *Responsibility to pay back continued benefits.* (1) If the final decision of the

Commissioner affirms the determination that you are not entitled to benefits, you will be asked to pay back any continued benefits you receive. However, as described in the overpayment recovery and waiver provisions of subpart F of this part, you will have the right to ask that you not be required to pay back the benefits. You will not be asked to pay back any Medicare benefits you received during the appeal.

(2) Anyone else receiving benefits based on your wages and self-employment income (or because of your disability) will be asked to pay back any continued benefits he or she received if the determination that your physical or mental impairment(s) has ceased, has never existed, or is no longer disabling, is not changed by the final decision of the Commissioner. However, he or she will have the right to ask that he or she not be required to pay them back, as described in the overpayment recovery and waiver provisions of subpart F of this part. He or she will not be asked to pay back any Medicare benefits he or she received during the appeal.

(3) Waiver of recovery of an overpayment resulting from the continued benefits paid to you or anyone else receiving benefits based on your wages and self-employment income (or because of your disability) may be considered as long as the determination was appealed in good faith. It will be assumed that such appeal is made in good faith and, therefore, any overpaid individual has the right to waiver consideration *unless* such individual fails to cooperate in connection with the appeal, e.g., if the individual fails (without good reason) to give us medical or other evidence we request, or to go for a physical or mental examination when requested by us, in connection with the appeal. In determining whether an individual has good cause for failure to cooperate and, thus, whether an appeal was made in good faith, we will take into account any physical, mental, educational, or linguistic limitations (including any lack of facility with the English language) the individual may have which may have caused the individual's failure to cooperate.

[53 FR 29020, Aug. 2, 1988; 53 FR 39015, Oct. 4, 1988, as amended at 57 FR 1383, Jan. 14, 1992; 59 FR 1635, Jan. 12, 1994; 62 FR 38451, July 18, 1997; 65 FR 16814, Mar. 30, 2000]

§ 404.1598 If you become disabled by another impairment(s).

If a new severe impairment(s) begins in or before the month in which your last impairment(s) ends, we will find that your disability is continuing. The new impairment(s) need not be expected to last 12 months or to result in death, but it must be severe enough to keep you from doing substantial gainful activity, or severe enough so that you are still disabled under § 404.1594.

[50 FR 50136, Dec. 6, 1985]

§ 404.1599 Work incentive experiments and rehabilitation demonstration projects in the disability program.

(a) *Authority and purpose.* Section 505(a) of the Social Security Disability Amendments of 1980, Pub. L. 96–265, directs the Commissioner to develop and conduct experiments and demonstration projects designed to provide more cost-effective ways of encouraging disabled beneficiaries to return to work and leave benefit rolls. These experiments and demonstration projects will test the advantages and disadvantages of altering certain limitations and conditions that apply to title II disabled beneficiaries. The objective of all work incentive experiments or rehabilitation demonstrations is to determine whether the alternative requirements will save Trust Fund monies or otherwise improve the administration of the disability program established under title II of the Act.

(b) *Altering benefit requirements, limitations or conditions.* Notwithstanding any other provision of this part, the Commissioner may waive compliance with the entitlement and payment requirements for disabled beneficiaries to carry our experiments and demonstration projects in the title II disability program. The projects involve altering certain limitations and conditions that currently apply to applicants and beneficiaries to test their effect on the program.

(c) *Applicability and scope*—(1) *Participants and nonparticipants.* If you are selected to participate in an experiment or demonstration project, we may temporarily set aside one or more of the current benefit entitlement or payment requirements, limitations or conditions and apply alternative provisions to you. We may also modify current methods of administering the Act as part of a project and apply alternative procedures or policies to you. The alternative provisions or methods of administration used in the projects will not disadvantage you in contrast to current provisions, procedures or policies. If you are not selected to participate in the experiments or demonstration projects (or if you are placed in a control group which is not subject to alternative requirements and methods) we will continue to apply to you the current benefit entitlement and payment requirements, limitations and conditions and methods of administration in the title II disability program.

(2) *Alternative provisions or methods of administration.* The alternative provisions or methods of administration that apply to you in an experiment or demonstration project may include (but are not limited to) one or more of the following:

(i) Reducing your benefits (instead of not paying) on the basis of the amount of your earnings in excess of the SGA amount;

(ii) Extending your benefit eligibility period that follows 9 months of trial work, perhaps coupled with benefit reductions related to your earnings;

(iii) Extending your Medicare benefits if you are severely impaired and return to work even though you may not be entitled to monthly cash benefits;

(iv) Altering the 24-month waiting period for Medicare entitlement; and

(v) Stimulating new forms of rehabilitation.

(d) *Selection of participants.* We will select a probability sample of participants for the work incentive experiments and demonstration projects from newly awarded beneficiaries who meet certain pre-selection criteria (for example, individuals who are likely to be able to do substantial work despite continuing severe impairments). These criteria are designed to provide larger subsamples of beneficiaries who are not likely either to recover medically or die. Participants may also be selected from persons who have been receiving DI benefits for 6 months or more at the time of selection.

(e) *Duration of experiments and demonstration projects.* A notice describing each experiment or demonstration project will be published in the FEDERAL REGISTER before each experiment or project is placed in operation. The work incentive experiments and rehabilitation demonstrations will be activated in 1982. A final report on the results of the experiments and projects is to be completed and transmitted to Congress by June 9, 1993. However, the authority for the experiments and demonstration projects will not terminate at that time. Some of the alternative provisions or methods of administration may continue to apply to participants in an experiment or demonstration project beyond that date in order to assure the validity of the research. Each experiment and demonstration project will have a termination date (up to 10 years from the start of the experiment or demonstration project).

[48 FR 7575, Feb. 23, 1983, as amended at 52 FR 37605, Oct. 8, 1987; 55 FR 51687, Dec. 17, 1990; 62 FR 38451, July 18, 1997]

APPENDIX 1 TO SUBPART P OF PART 404—LISTING OF IMPAIRMENTS

The body system listings in parts A and B of the Listing of Impairments will no longer be effective on the following dates unless extended by the Commissioner or revised and promulgated again.

1. Growth Impairment (100.00): January 27, 2017.
2. Musculoskeletal System (1.00 and 101.00): January 27, 2017.
3. Special Senses and Speech (2.00 and 102.00): April 29, 2018.
4. Respiratory System (3.00 and 103.00): January 27, 2017.
5. Cardiovascular System (4.00 and 104.00): January 27, 2017.
6. Digestive System (5.00 and 105.00): January 27, 2017.
7. Genitourinary Disorders (6.00 and 106.00): December 9, 2019.
8. Hematological Disorders (7.00 and 107.00): January 27, 2017.
9. Skin Disorders (8.00 and 108.00): January 27, 2017.

10. Endocrine Disorders (9.00 and 109.00): June 7, 2016.
11. Congenital Disorders That Affect Multiple Body Systems (10.00 and 110.00): April 5, 2018.
12. Neurological (11.00 and 111.00): January 27, 2017.
13. Mental Disorders (12.00 and 112.00): January 27, 2017.
14. Malignant Neoplastic Diseases (13.00 and 113.00): November 5, 2017
15. Immune System Disorders (14.00 and 114.00): June 16, 2016.

Part A

Criteria applicable to individuals age 18 and over and to children under age 18 where criteria are appropriate.

Sec.
1.00 Musculoskeletal System.
2.00 Special Senses and Speech.
3.00 Respiratory System.
4.00 Cardiovascular System.
5.00 Digestive System.
6.00 Genitourinary Disorders.
7.00 Hematological Disorders.
8.00 Skin Disorders.
9.00 Endocrine Disorders.
10.00 Congenital Disorders That Affect Multiple Body Systems
11.00 Neurological.
12.00 Mental Disorders.
13.00 Malignant Neoplastic Diseases.
14.00 Immune System Disorders.

1.00 Musculoskeletal System

A. *Disorders of the musculoskeletal system* may result from hereditary, congenital, or acquired pathologic processes. Impairments may result from infectious, inflammatory, or degenerative processes, traumatic or developmental events, or neoplastic, vascular, or toxic/metabolic diseases.

B. *Loss of function.*

1. *General.* Under this section, loss of function may be due to bone or joint deformity or destruction from any cause; miscellaneous disorders of the spine with or without radiculopathy or other neurological deficits; amputation; or fractures or soft tissue injuries, including burns, requiring prolonged periods of immobility or convalescence. The provisions of 1.02 and 1.03 notwithstanding, inflammatory arthritis is evaluated under 14.09 (see 14.00D6). Impairments with neurological causes are to be evaluated under 11.00ff.

2. How We Define Loss of Function in These Listings

a. *General.* Regardless of the cause(s) of a musculoskeletal impairment, functional loss for purposes of these listings is defined as the inability to ambulate effectively on a sustained basis for any reason, including pain associated with the underlying musculoskeletal impairment, or the inability to perform fine and gross movements effectively on a sustained basis for any reason, including pain associated with the underlying musculoskeletal impairment. The inability to ambulate effectively or the inability to perform fine and gross movements effectively must have lasted, or be expected to last, for at least 12 months. For the purposes of these criteria, consideration of the ability to perform these activities must be from a physical standpoint alone. When there is an inability to perform these activities due to a mental impairment, the criteria in 12.00ff are to be used. We will determine whether an individual can ambulate effectively or can perform fine and gross movements effectively based on the medical and other evidence in the case record, generally without developing additional evidence about the individual's ability to perform the specific activities listed as examples in 1.00B2b(2) and 1.00B2c.

b. What We Mean by Inability To Ambulate Effectively

(1) *Definition.* Inability to ambulate effectively means an extreme limitation of the ability to walk; *i.e.*, an impairment(s) that interferes very seriously with the individual's ability to independently initiate, sustain, or complete activities. Ineffective ambulation is defined generally as having insufficient lower extremity functioning (see 1.00J) to permit independent ambulation without the use of a hand-held assistive device(s) that limits the functioning of both upper extremities. (Listing 1.05C is an exception to this general definition because the individual has the use of only one upper extremity due to amputation of a hand.)

(2) *To ambulate effectively*, individuals must be capable of sustaining a reasonable walking pace over a sufficient distance to be able to carry out activities of daily living. They must have the ability to travel without companion assistance to and from a place of employment or school. Therefore, examples of ineffective ambulation include, but are not limited to, the inability to walk without the use of a walker, two crutches or two canes, the inability to walk a block at a reasonable pace on rough or uneven surfaces, the inability to use standard public transportation, the inability to carry out routine ambulatory activities, such as shopping and banking, and the inability to climb a few steps at a reasonable pace with the use of a single hand rail. The ability to walk independently about one's home without the use of assistive devices does not, in and of itself, constitute effective ambulation.

c. *What we mean by inability to perform fine and gross movements effectively.* Inability to perform fine and gross movements effectively means an extreme loss of function of

both upper extremities; *i.e.*, an impairment(s) that interferes very seriously with the individual's ability to independently initiate, sustain, or complete activities. To use their upper extremities effectively, individuals must be capable of sustaining such functions as reaching, pushing, pulling, grasping, and fingering to be able to carry out activities of daily living. Therefore, examples of inability to perform fine and gross movements effectively include, but are not limited to, the inability to prepare a simple meal and feed oneself, the inability to take care of personal hygiene, the inability to sort and handle papers or files, and the inability to place files in a file cabinet at or above waist level.

d. *Pain or other symptoms.* Pain or other symptoms may be an important factor contributing to functional loss. In order for pain or other symptoms to be found to affect an individual's ability to perform basic work activities, medical signs or laboratory findings must show the existence of a medically determinable impairment(s) that could reasonably be expected to produce the pain or other symptoms. The musculoskeletal listings that include pain or other symptoms among their criteria also include criteria for limitations in functioning as a result of the listed impairment, including limitations caused by pain. It is, therefore, important to evaluate the intensity and persistence of such pain or other symptoms carefully in order to determine their impact on the individual's functioning under these listings. See also §§ 404.1525(f) and 404.1529 of this part, and §§ 416.925(f) and 416.929 of part 416 of this chapter.

C. Diagnosis and Evaluation

1. *General.* Diagnosis and evaluation of musculoskeletal impairments should be supported, as applicable, by detailed descriptions of the joints, including ranges of motion, condition of the musculature (e.g., weakness, atrophy), sensory or reflex changes, circulatory deficits, and laboratory findings, including findings on x-ray or other appropriate medically acceptable imaging. Medically acceptable imaging includes, but is not limited to, x-ray imaging, computerized axial tomography (CAT scan) or magnetic resonance imaging (MRI), with or without contrast material, myelography, and radionuclear bone scans. ''Appropriate'' means that the technique used is the proper one to support the evaluation and diagnosis of the impairment.

2. *Purchase of certain medically acceptable imaging.* While any appropriate medically acceptable imaging is useful in establishing the diagnosis of musculoskeletal impairments, some tests, such as CAT scans and MRIs, are quite expensive, and we will not routinely purchase them. Some, such as myelograms, are invasive and may involve significant risk. We will not order such tests. However, when the results of any of these tests are part of the existing evidence in the case record we will consider them together with the other relevant evidence.

3. *Consideration of electrodiagnostic procedures.* Electrodiagnostic procedures may be useful in establishing the clinical diagnosis, but do not constitute alternative criteria to the requirements of 1.04.

D. *The physical examination* must include a detailed description of the rheumatological, orthopedic, neurological, and other findings appropriate to the specific impairment being evaluated. These physical findings must be determined on the basis of objective observation during the examination and not simply a report of the individual's allegation; e.g., ''He says his leg is weak, numb.'' Alternative testing methods should be used to verify the abnormal findings; e.g., a seated straight-leg raising test in addition to a supine straight-leg raising test. Because abnormal physical findings may be intermittent, their presence over a period of time must be established by a record of ongoing management and evaluation. Care must be taken to ascertain that the reported examination findings are consistent with the individual's daily activities.

E. Examination of the Spine

1. *General.* Examination of the spine should include a detailed description of gait, range of motion of the spine given quantitatively in degrees from the vertical position (zero degrees) or, for straight-leg raising from the sitting and supine position (zero degrees), any other appropriate tension signs, motor and sensory abnormalities, muscle spasm, when present, and deep tendon reflexes. Observations of the individual during the examination should be reported; e.g., how he or she gets on and off the examination table. Inability to walk on the heels or toes, to squat, or to arise from a squatting position, when appropriate, may be considered evidence of significant motor loss. However, a report of atrophy is not acceptable as evidence of significant motor loss without circumferential measurements of both thighs and lower legs, or both upper and lower arms, as appropriate, at a stated point above and below the knee or elbow given in inches or centimeters. Additionally, a report of atrophy should be accompanied by measurement of the strength of the muscle(s) in question generally based on a grading system of 0 to 5, with 0 being complete loss of strength and 5 being maximum strength. A specific description of atrophy of hand muscles is acceptable without measurements of atrophy but should include measurements of grip and pinch strength.

2. *When neurological abnormalities persist.* Neurological abnormalities may not completely subside after treatment or with the

passage of time. Therefore, residual neurological abnormalities that persist after it has been determined clinically or by direct surgical or other observation that the ongoing or progressive condition is no longer present will not satisfy the required findings in 1.04. More serious neurological deficits (paraparesis, paraplegia) are to be evaluated under the criteria in 11.00ff.

F. *Major joints* refers to the major peripheral joints, which are the hip, knee, shoulder, elbow, wrist-hand, and ankle-foot, as opposed to other peripheral joints (e.g., the joints of the hand or forefoot) or axial joints (*i.e.*, the joints of the spine.) The wrist and hand are considered together as one major joint, as are the ankle and foot. Since only the ankle joint, which consists of the juncture of the bones of the lower leg (tibia and fibula) with the hindfoot (tarsal bones), but not the forefoot, is crucial to weight bearing, the ankle and foot are considered separately in evaluating weight bearing.

G. *Measurements of joint motion* are based on the techniques described in the chapter on the extremities, spine, and pelvis in the current edition of the ''Guides to the Evaluation of Permanent Impairment'' published by the American Medical Association.

H. Documentation

1. *General.* Musculoskeletal impairments frequently improve with time or respond to treatment. Therefore, a longitudinal clinical record is generally important for the assessment of severity and expected duration of an impairment unless the claim can be decided favorably on the basis of the current evidence.

2. *Documentation of medically prescribed treatment and response.* Many individuals, especially those who have listing-level impairments, will have received the benefit of medically prescribed treatment. Whenever evidence of such treatment is available it must be considered.

3. *When there is no record of ongoing treatment.* Some individuals will not have received ongoing treatment or have an ongoing relationship with the medical community despite the existence of a severe impairment(s). In such cases, evaluation will be made on the basis of the current objective medical evidence and other available evidence, taking into consideration the individual's medical history, symptoms, and medical source opinions. Even though an individual who does not receive treatment may not be able to show an impairment that meets the criteria of one of the musculoskeletal listings, the individual may have an impairment(s) equivalent in severity to one of the listed impairments or be disabled based on consideration of his or her residual functional capacity (RFC) and age, education and work experience.

4. *Evaluation when the criteria of a musculoskeletal listing are not met.* These listings are only examples of common musculoskeletal disorders that are severe enough to prevent a person from engaging in gainful activity. Therefore, in any case in which an individual has a medically determinable impairment that is not listed, an impairment that does not meet the requirements of a listing, or a combination of impairments no one of which meets the requirements of a listing, we will consider medical equivalence. (See §§ 404.1526 and 416.926.) Individuals who have an impairment(s) with a level of severity that does not meet or equal the criteria of the musculoskeletal listings may or may not have the RFC that would enable them to engage in substantial gainful activity. Evaluation of the impairment(s) of these individuals should proceed through the final steps of the sequential evaluation process in §§ 404.1520 and 416.920 (or, as appropriate, the steps in the medical improvement review standard in §§ 404.1594 and 416.994).

I. Effects of Treatment

1. *General.* Treatments for musculoskeletal disorders may have beneficial effects or adverse side effects. Therefore, medical treatment (including surgical treatment) must be considered in terms of its effectiveness in ameliorating the signs, symptoms, and laboratory abnormalities of the disorder, and in terms of any side effects that may further limit the individual.

2. *Response to treatment.* Response to treatment and adverse consequences of treatment may vary widely. For example, a pain medication may relieve an individual's pain completely, partially, or not at all. It may also result in adverse effects, e.g., drowsiness, dizziness, or disorientation, that compromise the individual's ability to function. Therefore, each case must be considered on an individual basis, and include consideration of the effects of treatment on the individual's ability to function.

3. *Documentation.* A specific description of the drugs or treatment given (including surgery), dosage, frequency of administration, and a description of the complications or response to treatment should be obtained. The effects of treatment may be temporary or long-term. As such, the finding regarding the impact of treatment must be based on a sufficient period of treatment to permit proper consideration or judgment about future functioning.

J. Orthotic, Prosthetic, or Assistive Devices

1. *General.* Consistent with clinical practice, individuals with musculoskeletal impairments may be examined with and without the use of any orthotic, prosthetic, or assistive devices as explained in this section.

2. *Orthotic devices*. Examination should be with the orthotic device in place and should include an evaluation of the individual's maximum ability to function effectively with the orthosis. It is unnecessary to routinely evaluate the individual's ability to function without the orthosis in place. If the individual has difficulty with, or is unable to use, the orthotic device, the medical basis for the difficulty should be documented. In such cases, if the impairment involves a lower extremity or extremities, the examination should include information on the individual's ability to ambulate effectively without the device in place unless contraindicated by the medical judgment of a physician who has treated or examined the individual.

3. *Prosthetic devices*. Examination should be with the prosthetic device in place. In amputations involving a lower extremity or extremities, it is unnecessary to evaluate the individual's ability to walk without the prosthesis in place. However, the individual's medical ability to use a prosthesis to ambulate effectively, as defined in 1.00B2b, should be evaluated. The condition of the stump should be evaluated without the prosthesis in place.

4. *Hand-held assistive devices*. When an individual with an impairment involving a lower extremity or extremities uses a hand-held assistive device, such as a cane, crutch or walker, examination should be with and without the use of the assistive device unless contraindicated by the medical judgment of a physician who has treated or examined the individual. The individual's ability to ambulate with and without the device provides information as to whether, or the extent to which, the individual is able to ambulate without assistance. The medical basis for the use of any assistive device (e.g., instability, weakness) should be documented. The requirement to use a hand-held assistive device may also impact on the individual's functional capacity by virtue of the fact that one or both upper extremities are not available for such activities as lifting, carrying, pushing, and pulling.

K. *Disorders of the spine*, listed in 1.04, result in limitations because of distortion of the bony and ligamentous architecture of the spine and associated impingement on nerve roots (including the cauda equina) or spinal cord. Such impingement on nerve tissue may result from a herniated nucleus pulposus, spinal stenosis, arachnoiditis, or other miscellaneous conditions. Neurological abnormalities resulting from these disorders are to be evaluated by referral to the neurological listings in 11.00ff, as appropriate. (See also 1.00B and E.)

1. *Herniated nucleus pulposus* is a disorder frequently associated with the impingement of a nerve root. Nerve root compression results in a specific neuro-anatomic distribution of symptoms and signs depending upon the nerve root(s) compromised.

2. Spinal Arachnoiditis

a. *General*. Spinal arachnoiditis is a condition characterized by adhesive thickening of the arachnoid which may cause intermittent ill-defined burning pain and sensory dysesthesia, and may cause neurogenic bladder or bowel incontinence when the cauda equina is involved.

b. *Documentation*. Although the cause of spinal arachnoiditis is not always clear, it may be associated with chronic compression or irritation of nerve roots (including the cauda equina) or the spinal cord. For example, there may be evidence of spinal stenosis, or a history of spinal trauma or meningitis. Diagnosis must be confirmed at the time of surgery by gross description, microscopic examination of biopsied tissue, or by findings on appropriate medically acceptable imaging. Arachnoiditis is sometimes used as a diagnosis when such a diagnosis is unsupported by clinical or laboratory findings. Therefore, care must be taken to ensure that the diagnosis is documented as described in 1.04B. Individuals with arachnoiditis, particularly when it involves the lumbosacral spine, are generally unable to sustain any given position or posture for more than a short period of time due to pain.

3. *Lumbar spinal stenosis* is a condition that may occur in association with degenerative processes, or as a result of a congenital anomaly or trauma, or in association with Paget's disease of the bone. *Pseudoclaudication*, which may result from lumbar spinal stenosis, is manifested as pain and weakness, and may impair ambulation. Symptoms are usually bilateral, in the low back, buttocks, or thighs, although some individuals may experience only leg pain and, in a few cases, the leg pain may be unilateral. The pain generally does not follow a particular neuro-anatomical distribution, *i.e.*, it is distinctly different from the radicular type of pain seen with a herniated intervertebral disc, is often of a dull, aching quality, which may be described as ''discomfort'' or an ''unpleasant sensation,'' or may be of even greater severity, usually in the low back and radiating into the buttocks region bilaterally. The pain is provoked by extension of the spine, as in walking or merely standing, but is reduced by leaning forward. The distance the individual has to walk before the pain comes on may vary. Pseudoclaudication differs from peripheral vascular claudication in several ways. Pedal pulses and Doppler examinations are unaffected by pseudoclaudication. Leg pain resulting from peripheral vascular claudication involves the calves, and the leg pain in vascular claudication is ordinarily more severe than any back pain that may

also be present. An individual with vascular claudication will experience pain after walking the same distance time after time, and the pain will be relieved quickly when walking stops.

4. *Other miscellaneous conditions* that may cause weakness of the lower extremities, sensory changes, areflexia, trophic ulceration, bladder or bowel incontinence, and that should be evaluated under 1.04 include, but are not limited to, osteoarthritis, degenerative disc disease, facet arthritis, and vertebral fracture. Disorders such as spinal dysrhaphism (e.g., spina bifida), diastematomyelia, and tethered cord syndrome may also cause such abnormalities. In these cases, there may be gait difficulty and deformity of the lower extremities based on neurological abnormalities, and the neurological effects are to be evaluated under the criteria in 11.00ff.

L. *Abnormal curvatures of the spine.* Abnormal curvatures of the spine (specifically, scoliosis, kyphosis and kyphoscoliosis) can result in impaired ambulation, but may also adversely affect functioning in body systems other than the musculoskeletal system. For example, an individual's ability to breathe may be affected; there may be cardiac difficulties (e.g., impaired myocardial function); or there may be disfigurement resulting in withdrawal or isolation. When there is impaired ambulation, evaluation of equivalence may be made by reference to 14.09A. When the abnormal curvature of the spine results in symptoms related to fixation of the dorsolumbar or cervical spine, evaluation of equivalence may be made by reference to 14.09C. When there is respiratory or cardiac involvement or an associated mental disorder, evaluation may be made under 3.00ff, 4.00ff, or 12.00ff, as appropriate. Other consequences should be evaluated according to the listing for the affected body system.

M. *Under continuing surgical management,* as used in 1.07 and 1.08, refers to surgical procedures and any other associated treatments related to the efforts directed toward the salvage or restoration of functional use of the affected part. It may include such factors as post-surgical procedures, surgical complications, infections, or other medical complications, related illnesses, or related treatments that delay the individual's attainment of maximum benefit from therapy. When burns are not under continuing surgical management, see 8.00F.

N. *After maximum benefit from therapy has been achieved* in situations involving fractures of an upper extremity (1.07), or soft tissue injuries (1.08), *i.e.*, there have been no significant changes in physical findings or on appropriate medically acceptable imaging for any 6-month period after the last definitive surgical procedure or other medical intervention, evaluation must be made on the basis of the demonstrable residuals, if any. A finding that 1.07 or 1.08 is met must be based on a consideration of the symptoms, signs, and laboratory findings associated with recent or anticipated surgical procedures and the resulting recuperative periods, including any related medical complications, such as infections, illnesses, and therapies which impede or delay the efforts toward restoration of function. Generally, when there has been no surgical or medical intervention for 6 months after the last definitive surgical procedure, it can be concluded that maximum therapeutic benefit has been reached. Evaluation at this point must be made on the basis of the demonstrable residual limitations, if any, considering the individual's impairment-related symptoms, signs, and laboratory findings, any residual symptoms, signs, and laboratory findings associated with such surgeries, complications, and recuperative periods, and other relevant evidence.

O. *Major function of the face and head,* for purposes of listing 1.08, relates to impact on any or all of the activities involving vision, hearing, speech, mastication, and the initiation of the digestive process.

P. *When surgical procedures have been performed,* documentation should include a copy of the operative notes and available pathology reports.

Q. *Effects of obesity.* Obesity is a medically determinable impairment that is often associated with disturbance of the musculoskeletal system, and disturbance of this system can be a major cause of disability in individuals with obesity. The combined effects of obesity with musculoskeletal impairments can be greater than the effects of each of the impairments considered separately. Therefore, when determining whether an individual with obesity has a listing-level impairment or combination of impairments, and when assessing a claim at other steps of the sequential evaluation process, including when assessing an individual's residual functional capacity, adjudicators must consider any additional and cumulative effects of obesity.

1.01 Category of Impairments, Musculoskeletal

1.02 *Major dysfunction of a joint(s) (due to any cause):* Characterized by gross anatomical deformity (e.g., subluxation, contracture, bony or fibrous ankylosis, instability) and chronic joint pain and stiffness with signs of limitation of motion or other abnormal motion of the affected joint(s), and findings on appropriate medically acceptable imaging of joint space narrowing, bony destruction, or ankylosis of the affected joint(s). With:

A. Involvement of one major peripheral weight-bearing joint (*i.e.*, hip, knee, or ankle), resulting in inability to ambulate effectively, as defined in 1.00B2b;

or

B. Involvement of one major peripheral joint in each upper extremity (*i.e.*, shoulder, elbow, or wrist-hand), resulting in inability to perform fine and gross movements effectively, as defined in 1.00B2c.

1.03 *Reconstructive surgery or surgical arthrodesis of a major weight-bearing joint*, with inability to ambulate effectively, as defined in 1.00B2b, and return to effective ambulation did not occur, or is not expected to occur, within 12 months of onset.

1.04 *Disorders of the spine* (e.g., herniated nucleus pulposus, spinal arachnoiditis, spinal stenosis, osteoarthritis, degenerative disc disease, facet arthritis, vertebral fracture), resulting in compromise of a nerve root (including the cauda equina) or the spinal cord. With:

A. Evidence of nerve root compression characterized by neuro-anatomic distribution of pain, limitation of motion of the spine, motor loss (atrophy with associated muscle weakness or muscle weakness) accompanied by sensory or reflex loss and, if there is involvement of the lower back, positive straight-leg raising test (sitting and supine);

or

B. Spinal arachnoiditis, confirmed by an operative note or pathology report of tissue biopsy, or by appropriate medically acceptable imaging, manifested by severe burning or painful dysesthesia, resulting in the need for changes in position or posture more than once every 2 hours;

or

C. Lumbar spinal stenosis resulting in pseudoclaudication, established by findings on appropriate medically acceptable imaging, manifested by chronic nonradicular pain and weakness, and resulting in inability to ambulate effectively, as defined in 1.00B2b.

1.05 *Amputation (due to any cause).*

A. Both hands; or

or

B. One or both lower extremities at or above the tarsal region, with stump complications resulting in medical inability to use a prosthetic device to ambulate effectively, as defined in 1.00B2b, which have lasted or are expected to last for at least 12 months;

or

C. One hand and one lower extremity at or above the tarsal region, with inability to ambulate effectively, as defined in 1.00B2b; OR

D. Hemipelvectomy or hip disarticulation.

1.06 *Fracture of the femur, tibia, pelvis, or one or more of the tarsal bones*. With:

A. Solid union not evident on appropriate medically acceptable imaging and not clinically solid;

and

B. Inability to ambulate effectively, as defined in 1.00B2b, and return to effective ambulation did not occur or is not expected to occur within 12 months of onset.

1.07 *Fracture of an upper extremity* with nonunion of a fracture of the shaft of the humerus, radius, or ulna, under continuing surgical management, as defined in 1.00M, directed toward restoration of functional use of the extremity, and such function was not restored or expected to be restored within 12 months of onset.

1.08 *Soft tissue injury (e.g., burns)* of an upper or lower extremity, trunk, or face and head, under continuing surgical management, as defined in 1.00M, directed toward the salvage or restoration of major function, and such major function was not restored or expected to be restored within 12 months of onset. Major function of the face and head is described in 1.00O.

2.00 Special Senses and Speech

A. *How do we evaluate visual disorders?*

1. *What are visual disorders?* Visual disorders are abnormalities of the eye, the optic nerve, the optic tracts, or the brain that may cause a loss of visual acuity or visual fields. A loss of visual acuity limits your ability to distinguish detail, read, or do fine work. A loss of visual fields limits your ability to perceive visual stimuli in the peripheral extent of vision.

2. *How do we define statutory blindness?* Statutory blindness is blindness as defined in sections 216(i)(1) and 1614(a)(2) of the Social Security Act (Act).

a. The Act defines blindness as central visual acuity of 20/200 or less in the better eye with the use of a correcting lens. We use your best-corrected central visual acuity for distance in the better eye when we determine if this definition is met. (For visual acuity testing requirements, see 2.00A5.)

b. The Act also provides that an eye that has a visual field limitation such that the widest diameter of the visual field subtends an angle no greater than 20 degrees is considered as having a central visual acuity of 20/200 or less. (For visual field testing requirements, see 2.00A6.)

c. You have statutory blindness only if your visual disorder meets the criteria of 2.02 or 2.03A. You do not have statutory blindness if your visual disorder medically equals the criteria of 2.02 or 2.03A or meets or medically equals the criteria of 2.03B, 2.03C, 2.04A, or 2.04B because your disability is based on criteria other than those in the statutory definition of blindness.

3. *What evidence do we need to establish statutory blindness under title XVI?* To establish that you have statutory blindness under title XVI, we need evidence showing only

that your central visual acuity in your better eye or your visual field in your better eye meets the criteria in 2.00A2, provided that those measurements are consistent with the other evidence in your case record. We do not need documentation of the cause of your blindness. Also, there is no duration requirement for statutory blindness under title XVI (see §§ 416.981 and 416.983 of this chapter).

4. *What evidence do we need to evaluate visual disorders, including those that result in statutory blindness under title II?* To evaluate your visual disorder, we usually need a report of an eye examination that includes measurements of your best-corrected central visual acuity (see 2.00A5) or the extent of your visual fields (see 2.00A6), as appropriate. If you have visual acuity or visual field loss, we need documentation of the cause of the loss. A standard eye examination will usually indicate the cause of any visual acuity loss. A standard eye examination can also indicate the cause of some types of visual field deficits. Some disorders, such as cortical visual disorders, may result in abnormalities that do not appear on a standard eye examination. If the standard eye examination does not indicate the cause of your vision loss, we will request the information used to establish the presence of your visual disorder. If your visual disorder does not satisfy the criteria in 2.02, 2.03, or 2.04, we will request a description of how your visual disorder affects your ability to function.

5. *How do we measure your best-corrected central visual acuity?*

a. *Visual acuity testing.* When we need to measure your best-corrected central visual acuity (your optimal visual acuity attainable with the use of a corrective lens), we use visual acuity testing for distance that was carried out using Snellen methodology or any other testing methodology that is comparable to Snellen methodology.

(i) Your best-corrected central visual acuity for distance is usually measured by determining what you can see from 20 feet. If your visual acuity is measured for a distance other than 20 feet, we will convert it to a 20-foot measurement. For example, if your visual acuity is measured at 10 feet and is reported as 10/40, we will convert this measurement to 20/80.

(ii) A visual acuity recorded as CF (counts fingers), HM (hand motion only), LP or LPO (light perception or light perception only), or NLP (no light perception) indicates that no optical correction will improve your visual acuity. If your central visual acuity in an eye is recorded as CF, HM, LP or LPO, or NLP, we will determine that your best-corrected central visual acuity is 20/200 or less in that eye.

(iii) We will not use the results of pinhole testing or automated refraction acuity to determine your best-corrected central visual acuity. These tests provide an estimate of potential visual acuity but not an actual measurement of your best-corrected central visual acuity.

b. *Other test charts.* Most test charts that use Snellen methodology do not have lines that measure visual acuity between 20/100 and 20/200. Some test charts, such as the Bailey-Lovie or the Early Treatment Diabetic Retinopathy Study (ETDRS), used mostly in research settings, have such lines. If your visual acuity is measured with one of these charts, and you cannot read any of the letters on the 20/100 line, we will determine that you have statutory blindness based on a visual acuity of 20/200 or less. For example, if your best-corrected central visual acuity for distance in the better eye is 20/160 using an ETDRS chart, we will find that you have statutory blindness. Regardless of the type of test chart used, you do not have statutory blindness if you can read at least one letter on the 20/100 line. For example, if your best-corrected central visual acuity for distance in the better eye is 20/125+1 using an ETDRS chart, we will find that you do not have statutory blindness because you are able to read one letter on the 20/100 line.

c. *Testing using a specialized lens.* In some instances, you may have visual acuity testing performed using specialized lens, such as a contact lens. We will use the visual acuity measurements obtained with a specialized lens only if you have demonstrated the ability to use the specialized lens on a sustained basis. We will not use visual acuity measurements obtained with telescopic lenses.

d. *Cycloplegic refraction* is an examination of the eye performed after administering cycloplegic eye drops capable of relaxing the ability of the pupil to become smaller and temporarily paralyzing the focusing muscles. If your case record contains the results of cycloplegic refraction, we may use the results to determine your best-corrected central visual acuity. We will not purchase cycloplegic refraction.

e. *Visual evoked response (VER) testing* measures your response to visual events and can often detect dysfunction that is undetectable through other types of examinations. If you have an absent response to VER testing in your better eye, we will determine that your best-corrected central visual acuity is 20/200 or less in that eye and that your visual acuity loss satisfies the criterion in 2.02 when these test results are consistent with the other evidence in your case record. If you have a positive response to VER testing in an eye, we will not use that result to determine your best-corrected central visual acuity in that eye.

6. *How do we measure your visual fields?*

a. *General.* We generally need visual field testing when you have a visual disorder that could result in visual field loss, such as glaucoma, retinitis pigmentosa, or optic neuropathy, or when you display behaviors that

suggest a visual field loss. When we need to measure the extent of your visual field loss, we use visual field testing (also referred to as perimetry) carried out using automated static threshold perimetry performed on an acceptable perimeter. (For perimeter requirements, see 2.00A9.)

b. *Automated static threshold perimetry requirements.*

(i) The test must use a white size III Goldmann stimulus and a 31.5 apostilb (asb) white background (or a 10 candela per square meter (cd/m^2) white background). The stimuli test locations must be no more than 6 degrees apart horizontally or vertically. Measurements must be reported on standard charts and include a description of the size and intensity of the test stimulus.

(ii) We measure the extent of your visual field loss by determining the portion of the visual field in which you can see a white III4e stimulus. The ''III'' refers to the standard Goldmann test stimulus size III (4 mm^2), and the ''4e'' refers to the standard Goldmann intensity filter (0 decibel (dB) attenuation, which allows presentation of the maximum luminance) used to determine the intensity of the stimulus.

(iii) In automated static threshold perimetry, the intensity of the stimulus varies. The intensity of the stimulus is expressed in decibels (dB). A perimeter's maximum stimulus luminance is usually assigned the value 0 dB. We need to determine the dB level that corresponds to a 4e intensity for the particular perimeter being used. We will then use the dB printout to determine which points you see at a 4e intensity level (a ''seeing point''). For example:

A. When the maximum stimulus luminance (0 dB stimulus) on an acceptable perimeter is 10,000 asb, a 10 dB stimulus is equivalent to a 4e stimulus. Any point you see at 10 dB or greater is a seeing point.

B. When the maximum stimulus luminance (0 dB stimulus) on an acceptable perimeter is 4,000 asb, a 6 dB stimulus is equivalent to a 4e stimulus. Any point you see at 6 dB or greater is a seeing point.

C. When the maximum stimulus luminance (0 dB stimulus) on an acceptable perimeter is 1,000 asb, a 0 dB stimulus is equivalent to a 4e stimulus. Any point you see at 0 dB or greater is a seeing point.

c. *Evaluation under 2.03A.* To determine statutory blindness based on visual field loss in your better eye (2.03A), we need the results of a visual field test that measures the central 24 to 30 degrees of your visual field; that is, the area measuring 24 to 30 degrees from the point of fixation. Acceptable tests include the Humphrey Field Analyzer (HFA) 30–2, HFA 24–2, and Octopus 32.

d. *Evaluation under 2.03B.* To determine whether your visual field loss meets listing 2.03B, we use the mean deviation or defect (MD) from acceptable automated static threshold perimetry that measures the central 30 degrees of the visual field. MD is the average sensitivity deviation from normal values for all measured visual field locations. When using results from HFA tests, which report the MD as a negative number, we use the absolute value of the MD to determine whether your visual field loss meets listing 2.03B. We cannot use tests that do not measure the central 30 degrees of the visual field, such as the HFA 24–2, to determine if your impairment meets or medically equals 2.03B.

e. *Other types of perimetry.* If the evidence in your case contains visual field measurements obtained using manual or automated kinetic perimetry, such as Goldmann perimetry or the HFA ''SSA Test Kinetic,'' we can generally use these results if the kinetic test was performed using a white III4e stimulus projected on a white 31.5 asb (10 cd/m^2) background. Automated kinetic perimetry, such as the HFA ''SSA Test Kinetic,'' does not detect limitations in the central visual field because testing along a meridian stops when you see the stimulus. If your visual disorder has progressed to the point at which it is likely to result in a significant limitation in the central visual field, such as a scotoma (see 2.00A6h), we will not use *automated* kinetic perimetry to determine the extent of your visual field loss. Instead, we will determine the extent of your visual field loss using automated static threshold perimetry or manual kinetic perimetry.

f. *Screening tests.* We will not use the results of visual field screening tests, such as confrontation tests, tangent screen tests, or automated static screening tests, to determine that your impairment meets or medically equals a listing or to evaluate your residual functional capacity. We can consider normal results from visual field screening tests to determine whether your visual disorder is severe when these test results are consistent with the other evidence in your case record. (See §§404.1520(c), 404.1521, 416.920(c), and 416.921 of this chapter.) We will not consider normal test results to be consistent with the other evidence if the clinical findings indicate that your visual disorder has progressed to the point that it is likely to cause visual field loss, or you have a history of an operative procedure for retinal detachment.

g. *Use of corrective lenses.* You must not wear eyeglasses during visual field testing because they limit your field of vision. You may wear contact lenses to correct your visual acuity during the visual field test to obtain the most accurate visual field measurements. For this single purpose, you do not need to demonstrate that you have the ability to use the contact lenses on a sustained basis.

h. *Scotoma.* A scotoma is a field defect or non-seeing area (also referred to as a ''blind

spot'') in the visual field surrounded by a normal field or seeing area. When we measure your visual field, we subtract the length of any scotoma, other than the normal blind spot, from the overall length of any diameter on which it falls.

7. *How do we determine your visual acuity efficiency, visual field efficiency, and visual efficiency?*

a. *General. Visual efficiency*, a calculated value of your remaining visual function, is the combination of your *visual acuity efficiency* and your *visual field efficiency* expressed as a percentage.

b. *Visual acuity efficiency*. Visual acuity efficiency is a percentage that corresponds to the best-corrected central visual acuity for distance in your better eye. See Table 1.

TABLE 1—VISUAL ACUITY EFFICIENCY

Snellen best-corrected central visual acuity for distance		Visual acuity efficiency (%) (2.04A)
English	Metric	
20/16	6/5	100
20/20	6/6	100
20/25	6/7.5	95
20/30	6/9	90
20/40	6/12	85
20/50	6/15	75
20/60	6/18	70
20/70	6/21	65
20/80	6/24	60

TABLE 1—VISUAL ACUITY EFFICIENCY—Continued

Snellen best-corrected central visual acuity for distance		Visual acuity efficiency (%) (2.04A)
English	Metric	
20/100	6/30	50

c. *Visual field efficiency*. Visual field efficiency is a percentage that corresponds to the visual field in your better eye. Under 2.03C, we require kinetic perimetry to determine your visual field efficiency percentage. We calculate the visual field efficiency percentage by adding the number of degrees you see along the eight principal meridians found on a visual field chart (0, 45, 90, 135, 180, 225, 270, and 315) in your better eye and dividing by 5. For example, in Figure 1:

A. The diagram of the left eye illustrates a visual field, as measured with a III4e stimulus, contracted to 30 degrees in two meridians (180 and 225) and to 20 degrees in the remaining six meridians. The visual efficiency percentage of this field is: $((2 \times 30) + (6 \times 20)) \div 5 = 36$ percent.

B. The diagram of the right eye illustrates the extent of a normal visual field as measured with a III4e stimulus. The sum of the eight principal meridians of this field is 500 degrees. The visual efficiency percentage of this field is $500 \div 5 = 100$ percent.

Figure 1:

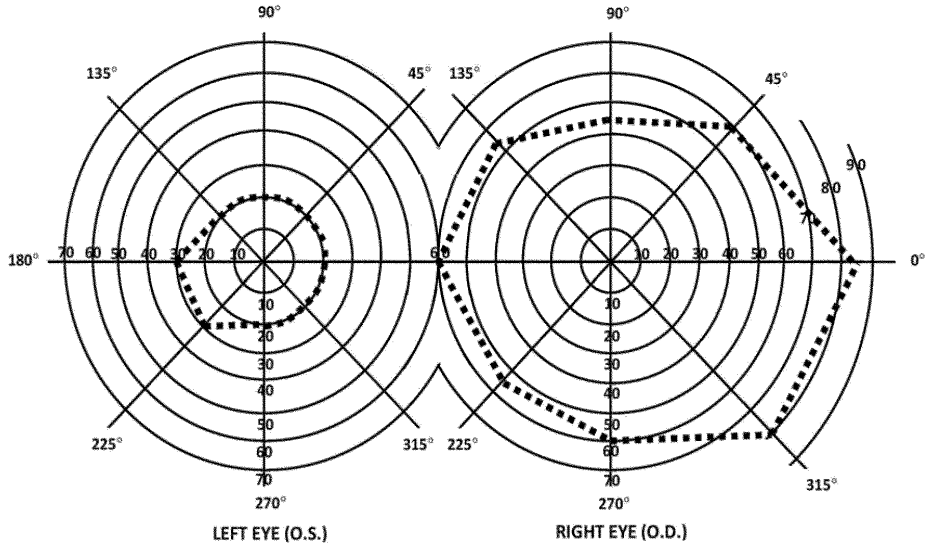

d. *Visual efficiency*. Under 2.04A, we calculate the visual efficiency percentage by multiplying your visual acuity efficiency percentage (see 2.00A7b) by your visual field efficiency percentage (see 2.00A7c) and dividing by 100. For example, if your visual acuity efficiency percentage is 75 and your visual field efficiency percentage is 36, your visual efficiency percentage is: (75 × 36) ÷ 100 = 27 percent.

8. *How do we determine your visual acuity impairment value, visual field impairment value, and visual impairment value?*

a. *General. Visual impairment value,* a calculated value of your loss of visual function, is the combination of your *visual acuity impairment value* and your *visual field impairment value.*

b. *Visual acuity impairment value.* Your visual acuity impairment value corresponds to the best-corrected central visual acuity for distance in your better eye. See Table 2.

TABLE 2—VISUAL ACUITY IMPAIRMENT VALUE

Snellen best-corrected central visual acuity for distance		Visual acuity impairment value (2.04B)
English	Metric	
20/16	6/5	0.00
20/20	6/6	0.00
20/25	6/7.5	0.10
20/30	6/9	0.18
20/40	6/12	0.30
20/50	6/15	0.40
20/60	6/18	0.48
20/70	6/21	0.54
20/80	6/24	0.60
20/100	6/30	0.70

c. *Visual field impairment value.* Your visual field impairment value corresponds to the visual field in your better eye. Using the MD from acceptable automated static threshold perimetry, we calculate the visual field impairment value by dividing the absolute value of the MD by 22. For example, if your MD on an HFA 30–2 is −16, your visual field impairment value is: $-16\sqrt{} \div 22 = 0.73$.

d. *Visual impairment value.* Under 2.04B, we calculate the visual impairment value by adding your visual acuity impairment value (see 2.00A8b) and your visual field impairment value (see 2.00A8c). For example, if your visual acuity impairment value is 0.48 and your visual field impairment value is 0.73, your visual impairment value is: 0.48 + 0.73 = 1.21.

9. *What are our requirements for an acceptable perimeter?* We will use results from automated static threshold perimetry performed on a perimeter that:

a. Uses optical projection to generate the test stimuli.

b. Has an internal normative database for automatically comparing your performance with that of the general population.

c. Has a statistical analysis package that is able to calculate visual field indices, particularly MD.

d. Demonstrates the ability to correctly detect visual field loss and correctly identify normal visual fields.

e. Demonstrates good test-retest reliability.

f. Has undergone clinical validation studies by three or more independent laboratories with results published in peer-reviewed ophthalmic journals.

B. *How do we evaluate hearing loss?*

1. *What evidence do we need?*

a. We need evidence showing that you have a medically determinable impairment that causes your hearing loss and audiometric measurements of the severity of your hearing loss. We generally require both a complete otologic examination and audiometric testing to establish that you have a medically determinable impairment that causes your hearing loss. You should have this audiometric testing within 2 months of the complete otologic examination. Once we have evidence that you have a medically determinable impairment, we can use the results of later audiometric testing to assess the severity of your hearing loss without another complete otologic examination. We will consider your test scores together with any other relevant information we have about your hearing, including information from outside of the test setting.

b. The complete otologic examination must be performed by a licensed physician (medical or osteopathic doctor). It must include your medical history, your description of how your hearing loss affects you, and the physician's description of the appearance of the external ears (pinnae and external ear canals), evaluation of the tympanic membranes, and assessment of any middle ear abnormalities.

c. Audiometric testing must be performed by, or under the direct supervision of, an otolaryngologist or by an audiologist qualified to perform such tests. We consider an audiologist to be qualified if he or she is currently and fully licensed or registered as a clinical audiologist by the State or U.S. territory in which he or she practices. If no licensure or registration is available, the audiologist must be currently certified by the American Board of Audiology or have a Certificate of Clinical Competence (CCC–A) from the American Speech-Language-Hearing Association (ASHA).

2. *What audiometric testing do we need when you do not have a cochlear implant?*

a. We generally need pure tone air conduction and bone conduction testing, speech reception threshold (SRT) testing (also referred to as ''spondee threshold'' or ''ST'' testing), and word recognition testing (also referred to as ''word discrimination'' or ''speech discrimination'' testing). This testing must be conducted in a sound-treated booth or room and must be in accordance with the most recently published standards of the American National Standards Institute (ANSI). Each ear must be tested separately.

b. You must not wear hearing aids during the testing. Additionally, a person described in 2.00B1c must perform an otoscopic examination immediately before the audiometric testing. (An *otoscopic examination* provides a description of the appearance of your external ear canals and an evaluation of the tympanic membranes. In these rules, we use the term to include otoscopic examinations performed by physicians and otoscopic inspections performed by audiologists and others.) The otoscopic examination must show that there are no conditions that would prevent valid audiometric testing, such as fluid in the ear, ear infection, or obstruction in an ear canal. The person performing the test should also report on any other factors, such as your cooperation with the test, that can affect the interpretation of the test results.

c. To determine whether your hearing loss meets the air and bone conduction criteria in 2.10A, we will average your air and bone conduction hearing thresholds at 500, 1000, and 2000 Hertz (Hz). If you do not have a response at a particular frequency, we will use a threshold of 5 decibels (dB) over the limit of the audiometer.

d. The SRT is the minimum dB level required for you to recognize 50 percent of the words on a standard list of spondee words. (Spondee words are two-syllable words that have equal stress on each syllable.) The SRT is usually within 10 dB of the average pure tone air conduction hearing thresholds at 500, 1000, and 2000 Hz. If the SRT is not within 10 dB of the average pure tone air conduction threshold, the reason for the discrepancy must be documented. If we cannot determine that there is a medical basis for the discrepancy, we will not use the results of the testing to determine whether your hearing loss meets a listing.

e. Word recognition testing determines your ability to recognize a standardized list of phonetically balanced monosyllabic words in the absence of any visual cues. This testing must be performed in quiet. The list may be recorded or presented live, but in either case the words should be presented at a level of amplification that will measure your maximum ability to discriminate words, usually 35 to 40 dB above your SRT. However, the amplification level used in the testing must be medically appropriate, and you must be able to tolerate it. If you cannot be tested at 35 to 40 dB above your SRT, the person who performs the test should report your word recognition testing score at your highest comfortable level of amplification.

3. *What audiometric testing do we need when you have a cochlear implant?*

a. If you have a cochlear implant, we will consider you to be disabled until 1 year after initial implantation.

b. After that period, we need word recognition testing performed with any version of the Hearing in Noise Test (HINT) to determine whether your impairment meets 2.11B. This testing must be conducted in quiet in a sound field. Your implant must be functioning properly and adjusted to your normal settings. The sentences should be presented at 60 dB HL (Hearing Level) and without any visual cues.

4. *How do we evaluate your word recognition ability if you are not fluent in English?*

If you are not fluent in English, you should have word recognition testing using an appropriate word list for the language in which you are most fluent. The person conducting the test should be fluent in the language used for the test. If there is no appropriate word list or no person who is fluent in the language and qualified to perform the test, it may not be possible to measure your word recognition ability. If your word recognition ability cannot be measured, your hearing loss cannot meet 2.10B or 2.11B. Instead, we will consider the facts of your case to determine whether you have difficulty understanding words in the language in which you are most fluent, and if so, whether that degree of difficulty medically equals 2.10B or 2.11B. For example, we will consider how you interact with family members, interpreters, and other persons who speak the language in which you are most fluent.

C. *How do we evaluate vertigo associated with disturbances of labyrinthine-vestibular function, including Meniere's disease?*

1. These disturbances of balance are characterized by an hallucination of motion or loss of position sense and a sensation of dizziness which may be constant or may occur in paroxysmal attacks. Nausea, vomiting, ataxia, and incapacitation are frequently observed, particularly during the acute attack. It is important to differentiate the report of rotary vertigo from that of ''dizziness'' which is described as lightheadedness, unsteadiness, confusion, or syncope.

2. Meniere's disease is characterized by paroxysmal attacks of vertigo, tinnitus, and fluctuating hearing loss. Remissions are unpredictable and irregular, but may be longlasting; hence, the severity of impairment is best determined after prolonged observation and serial reexaminations.

3. The diagnosis of a vestibular disorder requires a comprehensive neuro-otolaryngologic examination with a detailed

description of the vertiginous episodes, including notation of frequency, severity, and duration of the attacks. Pure tone and speech audiometry with the appropriate special examinations, such as Bekesy audiometry, are necessary. Vestibular functions is assessed by positional and caloric testing, preferably by electronystagmography. When polytomograms, contrast radiography, or other special tests have been performed, copies of the reports of these tests should be obtained in addition to appropriate medically acceptable imaging reports of the skull and temporal bone. Medically acceptable imaging includes, but is not limited to, x-ray imaging, computerized axial tomography (CAT scan) or magnetic resonance imaging (MRI), with or without contrast material, myelography, and radionuclear bone scans. ''Appropriate'' means that the technique used is the proper one to support the evaluation and diagnosis of the impairment.

D. *Loss of speech.* In evaluating the loss of speech, the ability to produce speech by any means includes the use of mechanical or electronic devices that improve voice or articulation. Impairments of speech may also be evaluated under the body system for the underlying disorder, such as neurological disorders, 11.00ff.

E. *How do we evaluate impairments that do not meet one of the special senses and speech listings?*

1. These listings are only examples of common special senses and speech disorders that we consider severe enough to prevent an individual from doing any gainful activity. If your impairment(s) does not meet the criteria of any of these listings, we must also consider whether you have an impairment(s) that satisfies the criteria of a listing in another body system.

2. If you have a medically determinable impairment(s) that does not meet a listing, we will determine whether the impairment(s) medically equals a listing. (See §§ 404.1526 and 416.926.) If you have an impairment(s) that does not meet or medically equal a listing, you may or may not have the residual functional capacity to engage in substantial gainful activity. Therefore, we proceed to the fourth, and if necessary, the fifth steps of the sequential evaluation process in §§ 404.1520 and 416.920. When we decide whether you continue to be disabled, we use the rules in §§ 404.1594, 416.994, or 416.994a, as appropriate.

2.01 Category of Impairments, Special Senses and Speech

2.02 *Loss of central visual acuity.* Remaining vision in the better eye after best correction is 20/200 or less.

2.03 *Contraction of the visual field in the better eye,* with:

A. The widest diameter subtending an angle around the point of fixation no greater than 20 degrees.

OR

B. An MD of 22 decibels or greater, determined by automated static threshold perimetry that measures the central 30 degrees of the visual field (see 2.00A6d).

OR

C. A visual field efficiency of 20 percent or less, determined by kinetic perimetry (see 2.00A7c).

2.04 *Loss of visual efficiency, or visual impairment, in the better eye:*

A. A visual efficiency percentage of 20 or less after best correction (see 2.00A7d).

OR

B. A visual impairment value of 1.00 or greater after best correction (see 2.00A8d).

2.07 *Disturbance of labyrinthine-vestibular function (including Meniere's disease),* characterized by a history of frequent attacks of balance disturbance, tinnitus, and progressive loss of hearing. With both A and B:

A. Disturbed function of vestibular labyrinth demonstrated by caloric or other vestibular tests; and

B. Hearing loss established by audiometry.

2.09 *Loss of speech* due to any cause, with inability to produce by any means speech that can be heard, understood, or sustained.

TABLE 1—PERCENTAGE OF VISUAL ACUITY EFFICIENCY CORRESPONDING TO THE BEST-CORRECTED VISUAL ACUITY MEASUREMENT FOR DISTANCE IN THE BETTER EYE

Snellen		Percent visual acuity efficiency
English	Metric	
20/16	6/5	100
20/20	6/6	100
20/25	6/7.5	95
20/30	6/9	90
20/40	6/12	85
20/50	6/15	75
20/60	6/18	70
20/70	6/21	65
20/80	6/24	60
20/100	6/30	50

TABLE 2—CHART OF VISUAL FIELDS

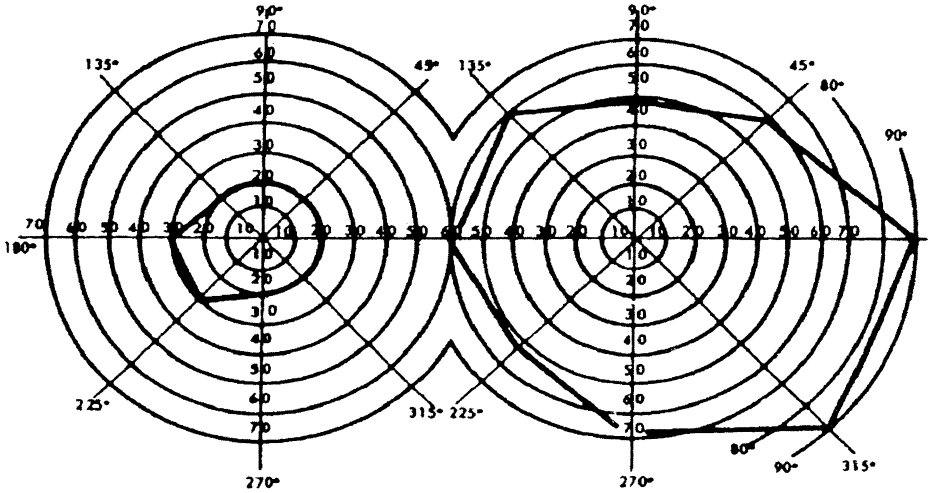

1. The diagram of the right eye illustrates the extent of a normal visual field as measured with a III4e stimulus. The sum of the eight principal meridians of this field is 500 degrees.

2. The diagram of the left eye illustrates a visual field contracted to 30 degrees in two meridians and to 20 degrees in the remaining six meridians. The percent of visual field efficiency of this field is: $(2 \times 30) + (6 \times 20) = 180 \div 500 = 0.36$ or 36 percent visual field efficiency.

2.10 *Hearing loss not treated with cochlear implantation.*

A. An average air conduction hearing threshold of 90 decibels or greater in the better ear and an average bone conduction hearing threshold of 60 decibels or greater in the better ear (*see* 2.00B2c).

OR

B. A word recognition score of 40 percent or less in the better ear determined using a standardized list of phonetically balanced monosyllabic words (see 2.00B2e).

2.11 *Hearing loss treated with cochlear implantation.*

A. Consider under a disability for 1 year after initial implantation.

OR

B. If more than 1 year after initial implantation, a word recognition score of 60 percent or less determined using the HINT (*see* 2.00B3b).

3.00 Respiratory System

A. *Introduction.* The listings in this section describe impairments resulting from respiratory disorders based on symptoms, physical signs, laboratory test abnormalities, and response to a regimen of treatment prescribed by a treating source. Respiratory disorders along with any associated impairment(s) must be established by medical evidence. Evidence must be provided in sufficient detail to permit an independent reviewer to evaluate the severity of the impairment.

Many individuals, especially those who have listing-level impairments, will have received the benefit of medically prescribed treatment. Whenever there is evidence of such treatment, the longitudinal clinical record must include a description of the treatment prescribed by the treating source and response in addition to information about the nature and severity of the impairment. It is important to document any prescribed treatment and response, because this medical management may have improved the individual's functional status. The longitudinal record should provide information regarding functional recovery, if any.

Some individuals will not have received ongoing treatment or have an ongoing relationship with the medical community, despite the existence of a severe impairment(s). An individual who does not receive treatment may or may not be able to show the existence of an impairment that meets the criteria of these listings. Even if an individual does not show that his or her impairment meets the criteria of these listings, the individual may have an impairment(s) equivalent in severity to one of the listed impairments or be disabled because of a limited residual functional capacity. Unless the claim can be decided favorably on the basis of the

current evidence, a longitudinal record is still important because it will provide information about such things as the ongoing medical severity of the impairment, the level of the individual's functioning, and the frequency, severity, and duration of symptoms. Also, the asthma listing specifically includes a requirement for continuing signs and symptoms despite a regimen of prescribed treatment.

Impairments caused by chronic disorders of the respiratory system generally produce irreversible loss of pulmonary function due to ventilatory impairments, gas exchange abnormalities, or a combination of both. The most common symptoms attributable to these disorders are dyspnea on exertion, cough, wheezing, sputum production, hemoptysis, and chest pain. Because these symptoms are common to many other diseases, a thorough medical history, physical examination, and chest x-ray or other appropriate imaging technique are required to establish chronic pulmonary disease. Pulmonary function testing is required to assess the severity of the respiratory impairment once a disease process is established by appropriate clinical and laboratory findings.

Alterations of pulmonary function can be due to obstructive airway disease (e.g., emphysema, chronic bronchitis, asthma), restrictive pulmonary disorders with primary loss of lung volume (e.g., pulmonary resection, thoracoplasty, chest cage deformity as in kyphoscoliosis or obesity), or infiltrative interstitial disorders (e.g., diffuse pulmonary fibrosis). Gas exchange abnormalities without significant airway obstruction can be produced by interstitial disorders. Disorders involving the pulmonary circulation (e.g., primary pulmonary hypertension, recurrent thromboembolic disease, primary or secondary pulmonary vasculitis) can produce pulmonary vascular hypertension and, eventually, pulmonary heart disease (cor pulmonale) and right heart failure. Persistent hypoxemia produced by any chronic pulmonary disorder also can result in chronic pulmonary hypertension and right heart failure. Chronic infection, caused most frequently by mycobacterial or mycotic organisms, can produce extensive and progressive lung destruction resulting in marked loss of pulmonary function. Some disorders, such as bronchiectasis, cystic fibrosis, and asthma, can be associated with intermittent exacerbations of such frequency and intensity that they produce a disabling impairment, even when pulmonary function during periods of relative clinical stability is relatively well-maintained.

Respiratory impairments usually can be evaluated under these listings on the basis of a complete medical history, physical examination, a chest x-ray or other appropriate imaging techniques, and spirometric pulmonary function tests. In some situations, most typically with a diagnosis of diffuse interstitial fibrosis or clinical findings suggesting cor pulmonale, such as cyanosis or secondary polycythemia, an impairment may be underestimated on the basis of spirometry alone. More sophisticated pulmonary function testing may then be necessary to determine if gas exchange abnormalities contribute to the severity of a respiratory impairment. Additional testing might include measurement of diffusing capacity of the lungs for carbon monoxide or resting arterial blood gases. Measurement of arterial blood gases during exercise is required infrequently. In disorders of the pulmonary circulation, right heart catheterization with angiography and/or direct measurement of pulmonary artery pressure may have been done to establish a diagnosis and evaluate severity. When performed, the results of the procedure should be obtained. Cardiac catheterization will not be purchased.

These listings are examples of common respiratory disorders that are severe enough to prevent a person from engaging in any gainful activity. When an individual has a medically determinable impairment that is not listed, an impairment which does not meet a listing, or a combination of impairments no one of which meets a listing, we will consider whether the individual's impairment or combination of impairments is medically equivalent in severity to a listed impairment. Individuals who have an impairment(s) with a level of severity which does not meet or equal the criteria of the listings may or may not have the residual functional capacity (RFC) which would enable them to engage in substantial gainful activity. Evaluation of the impairment(s) of these individuals will proceed through the final steps of the sequential evaluation process.

B. *Mycobacterial, mycotic, and other chronic persistent infections of the lung*. These disorders are evaluated on the basis of the resulting limitations in pulmonary function. Evidence of chronic infections, such as active mycobacterial diseases or mycoses with positive cultures, drug resistance, enlarging parenchymal lesions, or cavitation, is not, by itself, a basis for determining that an individual has a disabling impairment expected to last 12 months. In those unusual cases of pulmonary infection that persist for a period approaching 12 consecutive months, the clinical findings, complications, therapeutic considerations, and prognosis must be carefully assessed to determine whether, despite relatively well-maintained pulmonary function, the individual nevertheless has an impairment that is expected to last for at least 12 consecutive months and prevent gainful activity.

C. *Episodic respiratory disease*. When a respiratory impairment is episodic in nature, as

can occur with exacerbations of asthma, cystic fibrosis, bronchiectasis, or chronic asthmatic bronchitis, the frequency and intensity of episodes that occur despite prescribed treatment are often the major criteria for determining the level of impairment. Documentation for these exacerbations should include available hospital, emergency facility and/or physician records indicating the dates of treatment; clinical and laboratory findings on presentation, such as the results of spirometry and arterial blood gas studies (ABGS); the treatment administered; the time period required for treatment; and the clinical response. Attacks of asthma, episodes of bronchitis or pneumonia or hemoptysis (more than blood-streaked sputum), or respiratory failure as referred to in paragraph B of 3.03, 3.04, and 3.07, are defined as prolonged symptomatic episodes lasting one or more days and requiring intensive treatment, such as intravenous bronchodilator or antibiotic administration or prolonged inhalational bronchodilator therapy in a hospital, emergency room or equivalent setting. Hospital admissions are defined as inpatient hospitalizations for longer than 24 hours. The medical evidence must also include information documenting adherence to a prescribed regimen of treatment as well as a description of physical signs. For asthma, the medical evidence should include spirometric results obtained between attacks that document the presence of baseline airflow obstruction.

D. *Cystic fibrosis* is a disorder that affects either the respiratory or digestive body systems or both and is responsible for a wide and variable spectrum of clinical manifestations and complications. Confirmation of the diagnosis is based upon an elevated sweat sodium concentration or chloride concentration accompanied by one or more of the following: the presence of chronic obstructive pulmonary disease, insufficiency of exocrine pancreatic function, meconium ileus, or a positive family history. The quantitative pilocarpine iontophoresis procedure for collection of sweat content must be utilized. Two methods are acceptable: the ''Procedure for the Quantitative Iontophoretic Sweat Test for Cystic Fibrosis'' published by the Cystic Fibrosis Foundation and contained in, ''A Test for Concentration of Electrolytes in Sweat in Cystic Fibrosis of the Pancreas Utilizing Pilocarpine Iontophoresis,'' Gibson, I.E., and Cooke, R.E., *Pediatrics*, Vol. 23: 545, 1959; or the ''Wescor Macroduct System.'' To establish the diagnosis of cystic fibrosis, the sweat sodium or chloride content must be analyzed quantitatively using an acceptable laboratory technique. Another diagnostic test is the ''CF gene mutation analysis'' for homozygosity of the cystic fibrosis gene. The pulmonary manifestations of this disorder should be evaluated under 3.04. The nonpulmonary aspects of cystic fibrosis should be evaluated under the digestive body system (5.00). Because cystic fibrosis may involve the respiratory and digestive body systems, the combined effects of the involvement of these body systems must be considered in case adjudication.

E. *Documentation of pulmonary function testing*. The results of spirometry that are used for adjudication under paragraphs A and B of 3.02 and paragraph A of 3.04 should be expressed in liters (L), body temperature and pressure saturated with water vapor (BTPS). The reported one-second forced expiratory volume (FEV_1) and forced vital capacity (FVC) should represent the largest of at least three satisfactory forced expiratory maneuvers. Two of the satisfactory spirograms should be reproducible for both pre-bronchodilator tests and, if indicated, post-bronchodilator tests. A value is considered reproducible if it does not differ from the largest value by more than 5 percent or 0.1 L, whichever is greater. The highest values of the FEV_1 and FVC, whether from the same or different tracings, should be used to assess the severity of the respiratory impairment. Peak flow should be achieved early in expiration, and the spirogram should have a smooth contour with gradually decreasing flow throughout expiration. The zero time for measurement of the FEV_1 and FVC, if not distinct, should be derived by linear back-extrapolation of peak flow to zero volume. A spirogram is satisfactory for measurement of the FEV_1 if the expiratory volume at the back-extrapolated zero time is less than 5 percent of the FVC or 0.1 L, whichever is greater. The spirogram is satisfactory for measurement of the FVC if maximal expiratory effort continues for at least 6 seconds, or if there is a plateau in the volume-time curve with no detectable change in expired volume (VE) during the last 2 seconds of maximal expiratory effort.

Spirometry should be repeated after administration of an aerosolized bronchodilator under supervision of the testing personnel if the pre-bronchodilator FEV_1 value is less than 70 percent of the predicted normal value. Pulmonary function studies should not be performed unless the clinical status is stable (e.g., the individual is not having an asthmatic attack or suffering from an acute respiratory infection or other chronic illness). Wheezing is common in asthma, chronic bronchitis, or chronic obstructive pulmonary disease and does not preclude testing. The effect of the administered bronchodilator in relieving bronchospasm and improving ventilatory function is assessed by spirometry. If a bronchodilator is not administered, the reason should be clearly stated in the report. Pulmonary function studies performed to assess airflow obstruction without testing after bronchodilators cannot be used to assess levels of impairment in the range that prevents any

gainful work activity, unless the use of bronchodilators is contraindicated. Post-bronchodilator testing should be performed 10 minutes after bronchodilator administration. The dose and name of the bronchodilator administered should be specified. The values in paragraphs A and B of 3.02 must only be used as criteria for the level of ventilatory impairment that exists during the individual's most stable state of health (*i.e.*, any period in time except during or shortly after an exacerbation).

The appropriately labeled spirometric tracing, showing the claimant's name, date of testing, distance per second on the abscissa and distance per liter (L) on the ordinate, must be incorporated into the file. The manufacturer and model number of the device used to measure and record the spirogram should be stated. The testing device must accurately measure both time and volume, the latter to within 1 percent of a 3 L calibrating volume. If the spirogram was generated by any means other than direct pen linkage to a mechanical displacement-type spirometer, the testing device must have had a recorded calibration performed previously on the day of the spirometric measurement.

If the spirometer directly measures flow, and volume is derived by electronic integration, the linearity of the device must be documented by recording volume calibrations at three different flow rates of approximately 30 L/min (3 L/6 sec), 60 L/min (3 L/3 sec), and 180 L/min (3 L/sec). The volume calibrations should agree to within 1 percent of a 3 L calibrating volume. The proximity of the flow sensor to the individual should be noted, and it should be stated whether or not a BTPS correction factor was used for the calibration recordings and for the individual's actual spirograms.

The spirogram must be recorded at a speed of at least 20 mm/sec, and the recording device must provide a volume excursion of at least 10 mm/L. If reproductions of the original spirometric tracings are submitted, they must be legible and have a time scale of at least 20 mm/sec and a volume scale of at least 10 mm/L to permit independent measurements. Calculation of FEV_1 from a flow-volume tracing is not acceptable, *i.e.*, the spirogram and calibrations must be presented in a volume-time format at a speed of at least 20 mm/sec and a volume excursion of at least 10 mm/L to permit independent evaluation.

A statement should be made in the pulmonary function test report of the individual's ability to understand directions as well as his or her effort and cooperation in performing the pulmonary function tests.

The pulmonary function tables in 3.02 and 3.04 are based on measurement of standing height without shoes. If an individual has marked spinal deformities (e.g., kyphoscoliosis), the measured span between the fingertips with the upper extremities abducted 90 degrees should be substituted for height when this measurement is greater than the standing height without shoes.

F. *Documentation of chronic impairment of gas exchange.*

1. *Diffusing capacity of the lungs for carbon monoxide (DLCO).* A diffusing capacity of the lungs for carbon monoxide study should be purchased in cases in which there is documentation of chronic pulmonary disease, but the existing evidence, including properly performed spirometry, is not adequate to establish the level of functional impairment. Before purchasing DLCO measurements, the medical history, physical examination, reports of chest x-ray or other appropriate imaging techniques, and spirometric test results must be obtained and reviewed because favorable decisions can often be made based on available evidence without the need for DLCO studies. Purchase of a DLCO study may be appropriate when there is a question of whether an impairment meets or is equivalent in severity to a listing, and the claim cannot otherwise be favorably decided.

The DLCO should be measured by the single breath technique with the individual relaxed and seated. At sea level, the inspired gas mixture should contain approximately 0.3 percent carbon monoxide (CO), 10 percent helium (He), 21 percent oxygen (O_2), and the balance nitrogen. At altitudes above sea level, the inspired O_2 concentration may be raised to provide an inspired O_2 tension of approximately 150 mm Hg. Alternatively, the sea level mixture may be employed at altitude and the measured DLCO corrected for ambient barometric pressure. Helium may be replaced by another inert gas at an appropriate concentration. The inspired volume (VI) during the DLCO maneuver should be at least 90 percent of the previously determined vital capacity (VC). The inspiratory time for the VI should be less than 2 seconds, and the breath-hold time should be between 9 and 11 seconds. The washout volume should be between 0.75 and 1.00 L, unless the VC is less than 2 L. In this case, the washout volume may be reduced to 0.50 L; any such change should be noted in the report. The alveolar sample volume should be between 0.5 and 1.0 L and be collected in less than 3 seconds. At least 4 minutes should be allowed for gas washout between repeat studies.

A DLCO should be reported in units of ml CO, standard temperature, pressure, dry (STPD)/min/mm Hg uncorrected for hemoglobin concentration and be based on a single-breath alveolar volume determination. Abnormal hemoglobin or hematocrit values, and/or carboxyhemoglobin levels should be reported along with diffusing capacity.

The DLCO value used for adjudication should represent the mean of at least two acceptable measurements, as defined above. In

addition, two acceptable tests should be within 10 percent of each other or 3 ml CO(STPD)/min/mm Hg, whichever is larger. The percent difference should be calculated as 100×(test 1 − test 2)/average DLCO.

The ability of the individual to follow directions and perform the test properly should be described in the written report. The report should include tracings of the VI, breath-hold maneuver, and VE appropriately labeled with the name of the individual and the date of the test. The time axis should be at least 20 mm/sec and the volume axis at least 10 mm/L. The percentage concentrations of inspired O_2 and inspired and expired CO and He for each of the maneuvers should be provided. Sufficient data must be provided, including documentation of the source of the predicted equation, to permit verification that the test was performed adequately, and that, if necessary, corrections for anemia or carboxyhemoglobin were made appropriately.

2. *Arterial blood gas studies (ABGS).* An ABGS performed at rest (while breathing room air, awake and sitting or standing) or during exercise should be analyzed in a laboratory certified by a State or Federal agency. If the laboratory is not certified, it must submit evidence of participation in a national proficiency testing program as well as acceptable quality control at the time of testing. The report should include the altitude of the facility and the barometric pressure on the date of analysis.

Purchase of resting ABGS may be appropriate when there is a question of whether an impairment meets or is equivalent in severity to a listing, and the claim cannot otherwise be favorably decided. If the results of a DLCO study are greater than 40 percent of predicted normal but less than 60 percent of predicted normal, purchase of resting ABGS should be considered. Before purchasing resting ABGS, a program physician, preferably one experienced in the care of patients with pulmonary disease, must review all clinical and laboratory data short of this procedure, including spirometry, to determine whether obtaining the test would present a significant risk to the individual.

3. *Exercise testing.* Exercise testing with measurement of arterial blood gases during exercise may be appropriate in cases in which there is documentation of chronic pulmonary disease, but full development, short of exercise testing, is not adequate to establish if the impairment meets or is equivalent in severity to a listing, and the claim cannot otherwise be favorably decided. In this context, ''full development'' means that results from spirometry and measurement of DLCO and resting ABGS have been obtained from treating sources or through purchase. Exercise arterial blood gas measurements will be required infrequently and should be purchased only after careful review of the medical history, physical examination, chest x-ray or other appropriate imaging techniques, spirometry, DLCO, electrocardiogram (ECG), hematocrit or hemoglobin, and resting blood gas results by a program physician, preferably one experienced in the care of patients with pulmonary disease, to determine whether obtaining the test would presents a significant risk to the individual. Oximetry and capillary blood gas analysis are not acceptable substitutes for the measurement of arterial blood gases. Arterial blood gas samples obtained after the completion of exercise are not acceptable for establishing an individual's functional capacity.

Generally, individuals with a DLCO greater than 60 percent of predicted normal would not be considered for exercise testing with measurement of blood gas studies. The exercise test facility must be provided with the claimant's clinical records, reports of chest x-ray or other appropriate imaging techniques, and any spirometry, DLCO, and resting blood gas results obtained as evidence of record. The testing facility must determine whether exercise testing present a significant risk to the individual; if it does, the reason for not performing the test must be reported in writing.

4. *Methodology.* Individuals considered for exercise testing first should have resting arterial blood partial pressure of oxygen (PO_2), resting arterial blood partial pressure of carbon dioxide (PCO_2) and negative log of hydrogen ion concentration (pH) determinations by the testing facility. The sample should be obtained in either the sitting or standing position. The individual should then perform exercise under steady state conditions, preferably on a treadmill, breathing room air, for a period of 4 to 6 minutes at a speed and grade providing an oxygen consumption of approximately 17.5 ml/kg/min (5 METs). If a bicycle ergometer is used, an exercise equivalent of 5 METs (e.g., 450 kpm/min, or 75 watts, for a 176 pound (80 kilogram) person) should be used. If the individual is able to complete this level of exercise without achieving listing-level hypoxemia, then he or she should be exercised at higher workloads to determine exercise capacity. A warm-up period of treadmill walking or cycling may be performed to acquaint the individual with the exercise procedure. If during the warm-up period the individual cannot achieve an exercise level of 5 METs, a lower workload may be selected in keeping with the estimate of exercise capacity. The individual should be monitored by ECG throughout the exercise and in the immediate post-exercise period. Blood pressure and an ECG should be recorded during each minute of exercise. During the final 2 minutes of a specific level of steady state exercise, an arterial blood sample should be drawn and analyzed for oxygen pressure (or tension) (PO_2), carbon dioxide pressure (or tension) (PCO_2), and pH. At

the discretion of the testing facility, the sample may be obtained either from an indwelling arterial catheter or by direct arterial puncture. If possible, in order to evaluate exercise capacity more accurately, a test site should be selected that has the capability to measure minute ventilation, O_2 consumption, and carbon dioxide (CO_2) production. If the claimant fails to complete 4 to 6 minutes of steady state exercise, the testing laboratory should comment on the reason and report the actual duration and levels of exercise performed. This comment is necessary to determine if the individual's test performance was limited by lack of effort or other impairment (e.g., cardiac, peripheral vascular, musculoskeletal, neurological).

The exercise test report should contain representative ECG strips taken before, during and after exercise; resting and exercise arterial blood gas values; treadmill speed and grade settings, or, if a bicycle ergometer was used, exercise levels expressed in watts or kpm/min; and the duration of exercise. Body weight also should be recorded. If measured, O_2 consumption (STPD), minute ventilation (BTPS), and CO_2 production (STPD) also should be reported. The altitude of the test site, its normal range of blood gas values, and the barometric pressure on the test date must be noted.

G. *Chronic cor pulmonale and pulmonary vascular disease*. The establishment of an impairment attributable to irreversible cor pulmonale secondary to chronic pulmonary hypertension requires documentation by signs and laboratory findings of right ventricular overload or failure (e.g., an early diastolic right-sided gallop on auscultation, neck vein distension, hepatomegaly, peripheral edema, right ventricular outflow tract enlargement on x-ray or other appropriate imaging techniques, right ventricular hypertrophy on ECG, and increased pulmonary artery pressure measured by right heart catheterization available from treating sources). Cardiac catheterization will not be purchased. Because hypoxemia may accompany heart failure and is also a cause of pulmonary hypertension, and may be associated with hypoventilation and respiratory acidosis, arterial blood gases may demonstrate hypoxemia (decreased PO_2), CO_2 retention (increased PCO_2), and acidosis (decreased pH). Polycythemia with an elevated red blood cell count and hematocrit may be found in the presence of chronic hypoxemia.

P-pulmonale on the ECG does not establish chronic pulmonary hypertension or chronic cor pulmonale. Evidence of florid right heart failure need not be present at the time of adjudication for a listing (e.g., 3.09) to be satisfied, but the medical evidence of record should establish that cor pulmonale is chronic and irreversible.

H. *Sleep-related breathing disorders*. Sleep-related breathing disorders (sleep apneas) are caused by periodic cessation of respiration associated with hypoxemia and frequent arousals from sleep. Although many individuals with one of these disorders will respond to prescribed treatment, in some, the disturbed sleep pattern and associated chronic nocturnal hypoxemia cause daytime sleepiness with chronic pulmonary hypertension and/or disturbances in cognitive function. Because daytime sleepiness can affect memory, orientation, and personality, a longitudinal treatment record may be needed to evaluate mental functioning. Not all individuals with sleep apnea develop a functional impairment that affects work activity. When any gainful work is precluded, the physiologic basis for the impairment may be chronic cor pulmonale. Chronic hypoxemia due to episodic apnea may cause pulmonary hypertension (see 3.00G and 3.09). Daytime somnolence may be associated with disturbance in cognitive vigilance. Impairment of cognitive function may be evaluated under organic mental disorders (12.02).

I. *Effects of obesity*. Obesity is a medically determinable impairment that is often associated with disturbance of the respiratory system, and disturbance of this system can be a major cause of disability in individuals with obesity. The combined effects of obesity with respiratory impairments can be greater than the effects of each of the impairments considered separately. Therefore, when determining whether an individual with obesity has a listing-level impairment or combination of impairments, and when assessing a claim at other steps of the sequential evaluation process, including when assessing an individual's residual functional capacity, adjudicators must consider any additional and cumulative effects of obesity.

3.01 Category of Impairments, Respiratory System.

3.02 *Chronic pulmonary insufficiency*.

A. Chronic obstructive pulmonary disease, due to any cause, with the FEV_1 equal to or less than the values specified in table I corresponding to the person's height without shoes. (In cases of marked spinal deformity, see 3.00E.);

TABLE I

Height without shoes (centimeters)	Height without shoes (inches)	FEV_1 equal to or less than (L, BTPS)
154 or less	60 or less	1.05
155–160	61–63	1.15
161–165	64–65	1.25
166–170	66–67	1.35
171–175	68–69	1.45
176–180	70–71	1.55
181 or more	72 or more	1.65

Or

B. Chronic restrictive ventilatory disease, due to any cause, with the FVC equal to or less than the values specified in table II corresponding to the person's height without shoes. (In cases of marked spinal deformity, see 3.00E.);

TABLE II

Height without shoes (centimeters)	Height without shoes (inches)	FVC equal to or less than (L, BTPS)
154 or less	60 or less	1.25
155–160	61–63	1.35
161–165	64–65	1.45
166–170	66–67	1.55
171–175	68–69	1.65
176–180	70–71	1.75
181 or more	72 or more	1.85

Or

C. Chronic impairment of gas exchange due to clinically documented pulmonary disease. With:

1. Single breath DLCO (see 3.00F1) less than 10.5 ml/min/mm Hg or less than 40 percent of the predicted normal value. (Predicted values must either be based on data obtained at the test site or published values from a laboratory using the same technique as the test site. The source of the predicted values should be reported. If they are not published, they should be submitted in the form of a table or nomogram); or

2. Arterial blood gas values of PO_2 and simultaneously determined PCO_2 measured while at rest (breathing room air, awake and sitting or standing) in a clinically stable condition on at least two occasions, three or more weeks apart within a 6-month period, equal to or less than the values specified in the applicable table III-A or III-B or III-C:

TABLE III—A

[Applicable at test sites less than 3,000 feet above sea level]

Arterial PCO_2 (mm. Hg) and	Arterial PO_2 equal to or less than (mm. Hg)
30 or below	65
31	64
32	63
33	62
34	61
35	60
36	59
37	58
38	57
39	56
40 or above	55

TABLE III—B

[Applicable at test sites 3,000 through 6,000 feet above sea level]

Arterial PCO_2 (mm. Hg) and	Arterial PO_2 equal to or less than (mm. Hg)
30 or below	60
31	59
32	58
33	57
34	56
35	55
36	54
37	53
38	52
39	51
40 or above	50

TABLE III—C

[Applicable at test sites over 6,000 feet above sea level]

Arterial PCO_2 (mm. Hg) and	Arterial PO_2 or equal to or less than (mm. Hg)
30 or below	55
31	54
32	53
33	52
34	51
35	50
36	49
37	48
38	47
39	46
40 or above	45

Or

3. Arterial blood gas values of PO_2 and simultaneously determined PCO_2 during steady state exercise breathing room air (level of exercise equivalent to or less than 17.5 ml O_2 consumption/kg/min or 5 METs) equal to or less than the values specified in the applicable table III-A or III-B or III-C in 3.02C2.

3.03 *Asthma*. With:

A. Chronic asthmatic bronchitis. Evaluate under the criteria for chronic obstructive pulmonary disease in 3.02A;

Or

B. Attacks (as defined in 3.00C), in spite of prescribed treatment and requiring physician intervention, occurring at least once every 2 months or at least six times a year. Each in-patient hospitalization for longer than 24 hours for control of asthma counts as two attacks, and an evaluation period of at least 12 consecutive months must be used to determine the frequency of attacks.

3.04 *Cystic fibrosis*. With:

A. An FEV_1 equal to or less than the appropriate value specified in table IV corresponding to the individual's height without shoes. (In cases of marked spinal deformity, see 3.00E.);

Or

B. Episodes of bronchitis or pneumonia or hemoptysis (more than blood-streaked sputum) or respiratory failure (documented according to 3.00C), requiring physician intervention, occurring at least once every 2 months or at least six times a year. Each inpatient hospitalization for longer than 24 hours for treatment counts as two episodes, and an evaluation period of at least 12 consecutive months must be used to determine the frequency of episodes;

Or

C. Persistent pulmonary infection accompanied by superimposed, recurrent, symptomatic episodes of increased bacterial infection occurring at least once every 6 months and requiring intravenous or nebulization antimicrobial therapy.

TABLE IV

[Applicable only for evaluation under 3.04A—cystic fibrosis]

Height without shoes (centimeters)	Height without shoes (inches)	FEV_1 equal to or less than (L, BTPS)
154 or less	60 or less	1.45
155–159	61–62	1.55
160–164	63–64	1.65
165–169	65–66	1.75
170–174	67–68	1.85
175–179	69–70	1.95
180 or more	71 or more	2.05

3.05 [Reserved]

3.06 *Pneumoconiosis* (demonstrated by appropriate imaging techniques). Evaluate under the appropriate criteria in 3.02.

3.07 *Bronchiectasis* (demonstrated by appropriate imaging techniques). With:

A. Impairment of pulmonary function due to extensive disease. Evaluate under the appropriate criteria in 3.02;

Or

B. Episodes of bronchitis or pneumonia or hemoptysis (more than blood-streaked sputum) or respiratory failure (documented according to 3.00C), requiring physician intervention, occurring at least once every 2 months or at least six times a year. Each inpatient hospitalization for longer than 24 hours for treatment counts as two episodes, and an evaluation of at least 12 consecutive months must be used to determine the frequency of episodes.

3.08 *Mycobacterial, mycotic, and other chronic persistent infections of the lung* (see 3.00B). Evaluate under the appropriate criteria in 3.02.

3.09 *Cor pulmonale secondary to chronic pulmonary vascular hypertension*. Clinical evidence of cor pulmonale (documented according to 3.00G) with:

A. Mean pulmonary artery pressure greater than 40 mm Hg;

Or

B. Arterial hypoxemia. Evaluate under the criteria in 3.02C2.

3.10 *Sleep-related breathing disorders*. Evaluate under 3.09 (chronic cor pulmonale) or 12.02 (organic mental disorders).

3.11 *Lung transplant*. Consider under a disability for 12 months following the date of surgery; thereafter, evaluate the residual impairment.

4.00 CARDIOVASCULAR SYSTEM

A. General

1. *What do we mean by a cardiovascular impairment?*

a. We mean any disorder that affects the proper functioning of the heart or the circulatory system (that is, arteries, veins, capillaries, and the lymphatic drainage). The disorder can be congenital or acquired.

b. Cardiovascular impairment results from one or more of four consequences of heart disease:

(i) Chronic heart failure or ventricular dysfunction.

(ii) Discomfort or pain due to myocardial ischemia, with or without necrosis of heart muscle.

(iii) Syncope, or near syncope, due to inadequate cerebral perfusion from any cardiac cause, such as obstruction of flow or disturbance in rhythm or conduction resulting in inadequate cardiac output.

(iv) Central cyanosis due to right-to-left shunt, reduced oxygen concentration in the arterial blood, or pulmonary vascular disease.

c. Disorders of the veins or arteries (for example, obstruction, rupture, or aneurysm) may cause impairments of the lower extremities (peripheral vascular disease), the central nervous system, the eyes, the kidneys, and other organs. We will evaluate peripheral vascular disease under 4.11 or 4.12 and impairments of another body system(s) under the listings for that body system(s).

2. *What do we consider in evaluating cardiovascular impairments?* The listings in this section describe cardiovascular impairments based on symptoms, signs, laboratory findings, response to a regimen of prescribed treatment, and functional limitations.

3. *What do the following terms or phrases mean in these listings?*

a. *Medical consultant* is an individual defined in §§404.1616(a) and 416.1016(a). This term does not include medical sources who provide consultative examinations for us. We use the abbreviation ''MC'' throughout this section to designate a medical consultant.

b. *Persistent* means that the longitudinal clinical record shows that, with few exceptions, the required finding(s) has been present, or is expected to be present, for a continuous period of at least 12 months, such

that a pattern of continuing severity is established.

c. *Recurrent* means that the longitudinal clinical record shows that, within a consecutive 12-month period, the finding(s) occurs at least three times, with intervening periods of improvement of sufficient duration that it is clear that separate events are involved.

d. *Appropriate medically acceptable imaging* means that the technique used is the proper one to evaluate and diagnose the impairment and is commonly recognized as accurate for assessing the cited finding.

e. *A consecutive 12-month period* means a period of 12 consecutive months, all or part of which must occur within the period we are considering in connection with an application or continuing disability review.

f. *Uncontrolled* means the impairment does not adequately respond to standard prescribed medical treatment.

B. Documenting Cardiovascular Impairment

1. *What basic documentation do we need?* We need sufficiently detailed reports of history, physical examinations, laboratory studies, and any prescribed treatment and response to allow us to assess the severity and duration of your cardiovascular impairment. A longitudinal clinical record covering a period of not less than 3 months of observations and treatment is usually necessary, unless we can make a determination or decision based on the current evidence.

2. *Why is a longitudinal clinical record important?* We will usually need a longitudinal clinical record to assess the severity and expected duration of your impairment(s). If you have a listing-level impairment, you probably will have received medically prescribed treatment. Whenever there is evidence of such treatment, your longitudinal clinical record should include a description of the ongoing management and evaluation provided by your treating or other medical source. It should also include your response to this medical management, as well as information about the nature and severity of your impairment. The record will provide us with information on your functional status over an extended period of time and show whether your ability to function is improving, worsening, or unchanging.

3. *What if you have not received ongoing medical treatment?*

a. You may not have received ongoing treatment or have an ongoing relationship with the medical community despite the existence of a severe impairment(s). In this situation, we will base our evaluation on the current objective medical evidence and the other evidence we have. If you do not receive treatment, you cannot show an impairment that meets the criteria of most of these listings. However, we may find you disabled because you have another impairment(s) that in combination with your cardiovascular impairment medically equals the severity of a listed impairment or based on consideration of your residual functional capacity and age, education, and work experience.

b. Unless we can decide your claim favorably on the basis of the current evidence, a longitudinal record is still important. In rare instances where there is no or insufficient longitudinal evidence, we may purchase a consultative examination(s) to help us establish the severity and duration of your impairment.

4. *When will we wait before we ask for more evidence?*

a. We will wait when we have information showing that your impairment is not yet stable and the expected change in your impairment might affect our determination or decision. In these situations, we need to wait to properly evaluate the severity and duration of your impairment during a stable period. Examples of when we might wait are:

(i) If you have had a recent acute event; for example, a myocardial infarction (heart attack).

(ii) If you have recently had a corrective cardiac procedure; for example, coronary artery bypass grafting.

(iii) If you have started new drug therapy and your response to this treatment has not yet been established; for example, beta-blocker therapy for dilated congestive cardiomyopathy.

b. In these situations, we will obtain more evidence 3 months following the event before we evaluate your impairment. However, we will not wait if we have enough information to make a determination or decision based on all of the relevant evidence in your case.

5. *Will we purchase any studies?* In appropriate situations, we will purchase studies necessary to substantiate the diagnosis or to document the severity of your impairment, generally after we have evaluated the medical and other evidence we already have. We will not purchase studies involving exercise testing if there is significant risk involved or if there is another medical reason not to perform the test. We will follow sections 4.00C6, 4.00C7, and 4.00C8 when we decide whether to purchase exercise testing.

6. *What studies will we not purchase?* We will not purchase any studies involving cardiac catheterization, such as coronary angiography, arteriograms, or electrophysiological studies. However, if the results of catheterization are part of the existing evidence we have, we will consider them together with the other relevant evidence. See 4.00C15a.

C. Using Cardiovascular Test Results

1. *What is an ECG?*

a. *ECG* stands for *electrocardiograph* or *electrocardiogram*. An electrocardiograph is a machine that records electrical impulses of

your heart on a strip of paper called an electrocardiogram or a *tracing*. To record the ECG, a technician positions a number of small contacts (or *leads*) on your arms, legs, and across your chest to connect them to the ECG machine. An ECG may be done while you are resting or exercising.

b. The ECG tracing may indicate that you have a heart abnormality. It may indicate that your heart muscle is not getting as much oxygen as it needs (ischemia), that your heart rhythm is abnormal (arrhythmia), or that there are other abnormalities of your heart, such as left ventricular enlargement.

2. *How do we evaluate ECG evidence?* We consider a number of factors when we evaluate ECG evidence:

a. An original or legible copy of the 12-lead ECG obtained at rest must be appropriately dated and labeled, with the standardization inscribed on the tracing. Alteration in standardization of specific leads (such as to accommodate large QRS amplitudes) must be identified on those leads.

(i) Detailed descriptions or computer-averaged signals without original or legible copies of the ECG as described in listing 4.00C2a are not acceptable.

(ii) The effects of drugs or electrolyte abnormalities must be considered as possible noncardiac causes of ECG abnormalities of ventricular repolarization; that is, those involving the ST segment and T wave. If available, the predrug (especially digitalis glycosides) ECG should be submitted.

b. ECGs obtained in conjunction with treadmill, bicycle, or arm exercise tests should meet the following specifications:

(i) ECG reports must include the original calibrated ECG tracings or a legible copy.

(ii) A 12-lead baseline ECG must be recorded in the upright position before exercise.

(iii) A 12-lead ECG should be recorded at the end of each minute of exercise.

(iv) If ECG documentation of the effects of hyperventilation is obtained, the exercise test should be deferred for at least 10 minutes because metabolic changes of hyperventilation may alter the physiologic and ECG-recorded response to exercise.

(v) Post-exercise ECGs should be recorded using a generally accepted protocol consistent with the prevailing state of medical knowledge and clinical practice.

(vi) All resting, exercise, and recovery ECG strips must have the standardization inscribed on the tracing. The ECG strips should be labeled to indicate the date, the times recorded and the relationship to the stage of the exercise protocol. The speed and grade (treadmill test) or work rate (bicycle or arm ergometric test) should be recorded. The highest level of exercise achieved, heart rate and blood pressure levels during testing, and the reason(s) for terminating the test (including limiting signs or symptoms) must be recorded.

3. *What are exercise tests and what are they used for?*

a. Exercise tests have you perform physical activity and record how your cardiovascular system responds. Exercise tests usually involve walking on a treadmill, but other forms of exercise, such as an exercise bicycle or an arm exercise machine, may be used. Exercise testing may be done for various reasons; such as to evaluate the severity of your coronary artery disease or peripheral vascular disease or to evaluate your progress after a cardiac procedure or an acute event, like a myocardial infarction (heart attack). Exercise testing is the most widely used testing for identifying the presence of myocardial ischemia and for estimating maximal aerobic capacity (usually expressed in METs—metabolic equivalents) if you have heart disease.

b. We include exercise tolerance test (ETT) criteria in 4.02B3 (chronic heart failure) and 4.04A (ischemic heart disease). To meet the ETT criteria in these listings, the ETT must be a sign-or symptom-limited test in which you exercise while connected to an ECG until you develop a sign or symptom that indicates that you have exercised as much as is considered safe for you.

c. In 4.12B, we also refer to exercise testing for peripheral vascular disease. In this test, you walk on a treadmill, usually for a specified period of time, and the individual who administers the test measures the effect of exercise on the flow of blood in your legs, usually by using ultrasound. The test is also called an exercise Doppler test. Even though this test is intended to evaluate peripheral vascular disease, it will be stopped for your safety if you develop abnormal signs or symptoms because of heart disease.

d. Each type of test is done in a certain way following specific criteria, called a *protocol*. For our program, we also specify certain aspects of how any exercise test we purchase is to be done. See 4.00C10 and 4.00C17.

4. *Do ETTs have limitations?* An ETT provides an estimate of aerobic capacity for walking on a grade, bicycling, or moving one's arms in an environmentally controlled setting. Therefore, ETT results do not correlate with the ability to perform other types of exertional activities, such as lifting and carrying heavy loads, and do not provide an estimate of the ability to perform activities required for work in all possible work environments or throughout a workday. Also, certain medications (such as beta blockers) and conduction disorders (such as left or right bundle branch blocks) can cause false-negative or false-positive results. Therefore, we must consider the results of an ETT together with all the other relevant evidence in your case record.

5. *How does an ETT with measurement of maximal or peak oxygen uptake VO_2) differ from other ETTs?* Occasionally, medical evidence will include the results of an ETT with VO_2 While ETTs without measurement of VO_2 provide only an estimate of aerobic capacity, measured maximal or peak oxygen uptake provides an accurate measurement of aerobic capacity, which is often expressed in METs (metabolic equivalents). The MET level may not be indicated in the report of attained maximal or peak VO_2 testing, but can be calculated as follows: 1 MET = 3.5 milliliters (ml) of oxygen uptake per kilogram (kg) of body weight per minute. For example, a 70 kg (154 lb.) individual who achieves a maximal or peak VO_2 of 1225 ml in 1 minute has attained 5 METs (1225 ml/70 kg/1 min = 17.5 ml/kg/min. 17.5/3.5 = 5 METs).

6. *When will we consider whether to purchase an exercise test?*

a. We will consider whether to purchase an exercise test when:

(i) There is a question whether your cardiovascular impairment meets or medically equals the severity of one of the listings, or there is no timely test in the evidence we have (see 4.00C9), and we cannot find you disabled on some other basis; or

(ii) We need to assess your residual functional capacity and there is insufficient evidence in the record to make a determination or decision.

b. We will not purchase an exercise test when we can make our determination or decision based on the evidence we already have.

7. *What must we do before purchasing an exercise test?*

a. Before we purchase an exercise test, an MC, preferably one with experience in the care of patients with cardiovascular disease, must review the pertinent history, physical examinations, and laboratory tests that we have to determine whether the test would present a significant risk to you or if there is some other medical reason not to purchase the test (see 4.00C8).

b. If you are under the care of a treating source (see §§404.1502 and 416.902) for a cardiovascular impairment, this source has not performed an exercise test, and there are no reported significant risks to testing, we will request a statement from that source explaining why it was not done or should not be done before we decide whether we will purchase the test.

c. The MC, in accordance with the regulations and other instructions on consultative examinations, will generally give great weight to the treating source's opinion about the risk of exercise testing to you and will generally not override it. In the rare situation in which the MC does override the treating source's opinion, the MC must prepare a written rationale documenting the reasons for overriding the opinion.

d. If you do not have a treating source or we cannot obtain a statement from your treating source, the MC is responsible for assessing the risk to exercise testing based on a review of the records we have before purchasing an exercise test for you.

e. We must also provide your records to the medical source who performs the exercise test for review prior to conducting the test if the source does not already have them. The medical source who performs the exercise test has the ultimate responsibility for deciding whether you would be at risk.

8. *When will we not purchase an exercise test or wait before we purchase an exercise test?*

a. We will not purchase an exercise test when an MC finds that you have one of the following significant risk factors:

(i) Unstable angina not previously stabilized by medical treatment.

(ii) Uncontrolled cardiac arrhythmias causing symptoms or hemodynamic compromise.

(iii) An implanted cardiac defibrillator.

(iv) Symptomatic severe aortic stenosis.

(v) Uncontrolled symptomatic heart failure.

(vi) Aortic dissection.

(vii) Severe pulmonary hypertension (pulmonary artery systolic pressure greater than 60 mm Hg).

(viii) Left main coronary stenosis of 50 percent or greater that has not been bypassed.

(ix) Moderate stenotic valvular disease with a systolic gradient across the aortic valve of 50 mm Hg or greater.

(x) Severe arterial hypertension (systolic greater than 200 mm Hg or diastolic greater than 110 mm Hg).

(xi) Hypertrophic cardiomyopathy with a systolic gradient of 50 mm Hg or greater.

b. We also will not purchase an exercise test when you are prevented from performing exercise testing due to another impairment affecting your ability to use your arms and legs.

c. We will not purchase an ETT to document the presence of a cardiac arrhythmia.

d. We will wait to purchase an exercise test until 3 months after you have had one of the following events. This will allow for maximal, attainable restoration of functional capacity.

(i) Acute myocardial infarction.

(ii) Surgical myocardial revascularization (bypass surgery).

(iii) Other open-heart surgical procedures.

(iv) Percutaneous transluminal coronary angioplasty with or without stenting.

e. If you are deconditioned after an extended period of bedrest or inactivity and could improve with activity, or if you are in acute heart failure and are expected to improve with treatment, we will wait an appropriate period of time for you to recuperate before we purchase an exercise test.

9. *What do we mean by a ''timely'' test?*

a. We consider exercise test results to be timely for 12 months after the date they are performed, provided there has been no change in your clinical status that may alter the severity of your cardiovascular impairment.

b. However, an exercise test that is older than 12 months, especially an abnormal one, can still provide information important to our adjudication. For example, a test that is more than 12 months old can provide evidence of ischemic heart disease or peripheral vascular disease, information on decreased aerobic capacity, or information about the duration or onset of your impairment. Such tests can be an important component of the longitudinal record.

c. When we evaluate a test that is more than 12 months old, we must consider the results in the context of all the relevant evidence, including why the test was performed and whether there has been an intervening event or improvement or worsening of your impairment.

d. We will purchase a new exercise test only if we cannot make a determination or decision based on the evidence we have.

10. *How must ETTs we purchase be performed?*

a. The ETT must be a sign- or symptom-limited test characterized by a progressive multistage regimen. It must be performed using a generally accepted protocol consistent with the prevailing state of medical knowledge and clinical practice. A description of the protocol that was followed must be provided, and the test must meet the requirements of 4.00C2b and this section. A radionuclide perfusion scan may be useful for detecting or confirming ischemia when resting ECG abnormalities, medications, or other factors may decrease the accuracy of ECG interpretation of ischemia. (The perfusion imaging is done at the termination of exercise, which may be at a higher MET level than that at which ischemia first occurs. If the imaging confirms the presence of reversible ischemia, the exercise ECG may be useful for detecting the MET level at which ischemia initially appeared.) Exercise tests may also be performed using echocardiography to detect stress-induced ischemia and left ventricular dysfunction (see 4.00C12 and 4.00C13).

b. The exercise test must be paced to your capabilities and be performed following the generally accepted standards for adult exercise test laboratories. With a treadmill test, the speed, grade (incline), and duration of exercise must be recorded for each exercise test stage performed. Other exercise test protocols or techniques should use similar workloads. The exercise protocol may need to be modified in individual cases to allow for a lower initial workload with more slowly graded increments than the standard Bruce protocol.

c. Levels of exercise must be described in terms of workload and duration of each stage; for example, treadmill speed and grade, or bicycle ergometer work rate in kpm/min or watts.

d. The exercise laboratory's physical environment, staffing, and equipment must meet the generally accepted standards for adult exercise test laboratories.

11. *How do we evaluate ETT results?* We evaluate ETT results on the basis of the work level at which the test becomes abnormal, as documented by onset of signs or symptoms and any ECG or imaging abnormalities. The absence of an ischemic response on an ETT alone does not exclude the diagnosis of ischemic heart disease. We must consider the results of an ETT in the context of all of the other evidence in your case record.

12. *When are ETTs done with imaging?* When resting ECG abnormalities preclude interpretation of ETT tracings relative to ischemia, a radionuclide (for example, thallium-201 or technetium-99m) perfusion scan or echocardiography in conjunction with an ETT provides better results. You may have resting ECG abnormalities when you have a conduction defect—for example, Wolff-Parkinson-White syndrome, left bundle branch block, left ventricular hypertrophy—or when you are taking digitalis or other antiarrhythmic drugs, or when resting ST changes are present. Also, these techniques can provide a reliable estimate of ejection fraction.

13. *Will we purchase ETTs with imaging?* We may purchase an ETT with imaging in your case after an MC, preferably one with experience in the care of patients with cardiovascular disease, has reviewed your medical history and physical examination, any report(s) of appropriate medically acceptable imaging, ECGs, and other appropriate tests. We will consider purchasing an ETT with imaging when other information we have is not adequate for us to assess whether you have severe ventricular dysfunction or myocardial ischemia, there is no significant risk involved (see 4.00C8a), and we cannot make our determination or decision based on the evidence we already have.

14. *What are drug-induced stress tests?* These tests are designed primarily to provide evidence about myocardial ischemia or prior myocardial infarction, but do not require you to exercise. These tests are used when you cannot exercise or cannot exercise enough to achieve the desired cardiac stress. Drug-induced stress tests can also provide evidence about heart chamber dimensions and function; however, these tests do not provide information about your aerobic capacity and cannot be used to help us assess your ability to function. Some of these tests use agents, such as Persantine or adenosine, that dilate the coronary arteries and are

used in combination with nuclear agents, such as thallium or technetium (for example, Cardiolyte or Myoview), and a myocardial scan. Other tests use agents, such as dobutamine, that stimulate the heart to contract more forcefully and faster to simulate exercise and are used in combination with a 2-dimensional echocardiogram. We may, when appropriate, purchase a drug-induced stress test to confirm the presence of myocardial ischemia after a review of the evidence in your file by an MC, preferably one with experience in the care of patients with cardiovascular disease.

15. *How do we evaluate cardiac catheterization evidence?*

a. We will not purchase cardiac catheterization; however, if you have had catheterization, we will make every reasonable effort to obtain the report and any ancillary studies. We will consider the quality and type of data provided and its relevance to the evaluation of your impairment. For adults, we generally see two types of catheterization reports: Coronary arteriography and left ventriculography.

b. For coronary arteriography, the report should provide information citing the method of assessing coronary arterial lumen diameter and the nature and location of obstructive lesions. Drug treatment at baseline and during the procedure should be reported. Some individuals with significant coronary atherosclerotic obstruction have collateral vessels that supply the myocardium distal to the arterial obstruction so that there is no evidence of myocardial damage or ischemia, even with exercise. When the results of quantitative computer measurements and analyses are included in your case record, we will consider them in interpreting the severity of stenotic lesions.

c. For left ventriculography, the report should describe the wall motion of the myocardium with regard to any areas of hypokinesis (abnormally decreased motion), akinesis (lack of motion), or dyskinesis (distortion of motion), and the overall contraction of the ventricle as measured by the ejection fraction. Measurement of chamber volumes and pressures may be useful. Quantitative computer analysis provides precise measurement of segmental left ventricular wall thickness and motion. There is often a poor correlation between left ventricular function at rest and functional capacity for physical activity.

16. *What details should exercise Doppler test reports contain?* The reports of exercise Doppler tests must describe the level of exercise; for example, the speed and grade of the treadmill settings, the duration of exercise, symptoms during exercise, and the reasons for stopping exercise if the expected level of exercise was not attained. They must also include the blood pressures at the ankle and other pertinent sites measured after exercise and the time required for the systolic blood pressure to return toward or to the pre-exercise level. The graphic tracings, if available, should also be included with the report. All tracings must be annotated with the standardization used by the testing facility.

17. *How must exercise Doppler tests we purchase be performed?* When we purchase an exercise Doppler test, you must exercise on a treadmill at 2 mph on a 12 percent grade for up to 5 minutes. The reports must include the information specified in 4.00C16. Because this is an exercise test, we must evaluate whether such testing would put you at significant risk, in accordance with the guidance found in 4.00C6, 4.00C7, and 4.00C8.

D. Evaluating Chronic Heart Failure

1. *What is chronic heart failure (CHF)?*

a. *CHF* is the inability of the heart to pump enough oxygenated blood to body tissues. This syndrome is characterized by symptoms and signs of pulmonary or systemic congestion (fluid retention) or limited cardiac output. Certain laboratory findings of cardiac functional and structural abnormality support the diagnosis of CHF. There are two main types of CHF:

(i) *Predominant systolic dysfunction* (the inability of the heart to contract normally and expel sufficient blood), which is characterized by a dilated, poorly contracting left ventricle and reduced ejection fraction (abbreviated EF, it represents the percentage of the blood in the ventricle actually pumped out with each contraction), and

(ii) *Predominant diastolic dysfunction* (the inability of the heart to relax and fill normally), which is characterized by a thickened ventricular muscle, poor ability of the left ventricle to distend, increased ventricular filling pressure, and a normal or increased EF.

b. CHF is considered in these listings as a single category whether due to atherosclerosis (narrowing of the arteries), cardiomyopathy, hypertension, or rheumatic, congenital, or other heart disease. However, if the CHF is the result of primary pulmonary hypertension secondary to disease of the lung (cor pulmonale), we will evaluate your impairment using 3.09, in the respiratory system listings.

2. *What evidence of CHF do we need?*

a. Cardiomegaly or ventricular dysfunction must be present and demonstrated by appropriate medically acceptable imaging, such as chest x-ray, echocardiography (M-Mode, 2-dimensional, and Doppler), radionuclide studies, or cardiac catheterization.

(i) Abnormal cardiac imaging showing increased left ventricular end diastolic diameter (LVEDD), decreased EF, increased left atrial chamber size, increased ventricular filling pressures measured at cardiac catheterization, or increased left ventricular wall or septum thickness, provides objective

measures of both left ventricular function and structural abnormality in heart failure.

(ii) An LVEDD greater than 6.0 cm or an EF of 30 percent or less measured during a period of stability (that is, not during an episode of acute heart failure) may be associated clinically with systolic failure.

(iii) Left ventricular posterior wall thickness added to septal thickness totaling 2.5 cm or greater with left atrium enlarged to 4.5 cm or greater may be associated clinically with diastolic failure.

(iv) However, these measurements alone do not reflect your functional capacity, which we evaluate by considering all of the relevant evidence. In some situations, we may need to purchase an ETT to help us assess your functional capacity.

(v) Other findings on appropriate medically acceptable imaging may include increased pulmonary vascular markings, pleural effusion, and pulmonary edema. These findings need not be present on each report, since CHF may be controlled by prescribed treatment.

b. To establish that you have *chronic* heart failure, your medical history and physical examination should describe characteristic symptoms and signs of pulmonary or systemic congestion or of limited cardiac output associated with the abnormal findings on appropriate medically acceptable imaging. When an acute episode of heart failure is triggered by a remediable factor, such as an arrhythmia, dietary sodium overload, or high altitude, cardiac function may be restored and a chronic impairment may not be present.

(i) Symptoms of congestion or of limited cardiac output include easy fatigue, weakness, shortness of breath (dyspnea), cough, or chest discomfort at rest or with activity. Individuals with CHF may also experience shortness of breath on lying flat (orthopnea) or episodes of shortness of breath that wake them from sleep (paroxysmal nocturnal dyspnea). They may also experience cardiac arrhythmias resulting in palpitations, lightheadedness, or fainting.

(ii) Signs of congestion may include hepatomegaly, ascites, increased jugular venous distention or pressure, rales, peripheral edema, or rapid weight gain. However, these signs need not be found on all examinations because fluid retention may be controlled by prescribed treatment.

3. *Is it safe for you to have an ETT, if you have CHF?* The presence of CHF is not necessarily a contraindication to an ETT, unless you are having an acute episode of heart failure. Measures of cardiac performance are valuable in helping us evaluate your ability to do work-related activities. Exercise testing has been safely used in individuals with CHF; therefore, we may purchase an ETT for evaluation under 4.02B3 if an MC, preferably one experienced in the care of patients with cardiovascular disease, determines that there is no significant risk to you. (See 4.00C6 for when we will consider the purchase of an ETT. See 4.00C7–4.00C8 for what we must do before we purchase an ETT and when we will not purchase one.) ST segment changes from digitalis use in the treatment of CHF do not preclude the purchase of an ETT.

4. *How do we evaluate CHF using 4.02?*

a. We must have objective evidence, as described in 4.00D2, that you have chronic heart failure.

b. To meet the required level of severity for this listing, your impairment must satisfy the requirements of one of the criteria in A and one of the criteria in B.

c. In 4.02B2, the phrase *periods of stabilization* means that, for at least 2 weeks between episodes of acute heart failure, there must be objective evidence of clearing of the pulmonary edema or pleural effusions and evidence that you returned to, or you were medically considered able to return to, your prior level of activity.

d. Listing 4.02B3c requires a decrease in systolic blood pressure below the baseline level (taken in the standing position immediately prior to exercise) or below any systolic pressure reading recorded during exercise. This is because, normally, systolic blood pressure and heart rate increase gradually with exercise. Decreases in systolic blood pressure below the baseline level that occur during exercise are often associated with ischemia-induced left ventricular dysfunction resulting in decreased cardiac output. However, a blunted response (that is, failure of the systolic blood pressure to rise 10 mm Hg or more), particularly in the first 3 minutes of exercise, may be drug-related and is not necessarily associated with left ventricular dysfunction. Also, some individuals with increased sympathetic responses because of deconditioning or apprehension may increase their systolic blood pressure and heart rate above their baseline level just before and early into exercise. This can be associated with a drop in systolic pressure in early exercise that is not due to left ventricular dysfunction. Therefore, an early decrease in systolic blood pressure must be interpreted within the total context of the test; that is, the presence or absence of symptoms such as lightheadedness, ischemic changes, or arrhythmias on the ECG.

E. Evaluating Ischemic Heart Disease

1. *What is ischemic heart disease (IHD)? IHD* results when one or more of your coronary arteries is narrowed or obstructed or, in rare situations, constricted due to vasospasm, interfering with the normal flow of blood to your heart muscle (ischemia). The obstruction may be the result of an embolus, a

thrombus, or plaque. When heart muscle tissue dies as a result of the reduced blood supply, it is called a myocardial infarction (heart attack).

2. *What causes chest discomfort of myocardial origin?*

a. Chest discomfort of myocardial ischemic origin, commonly known as angina pectoris, is usually caused by coronary artery disease (often abbreviated CAD). However, ischemic discomfort may be caused by a noncoronary artery impairment, such as aortic stenosis, hypertrophic cardiomyopathy, pulmonary hypertension, or anemia.

b. Instead of typical angina pectoris, some individuals with IHD experience atypical angina, anginal equivalent, variant angina, or silent ischemia, all of which we may evaluate using 4.04. We discuss the various manifestations of ischemia in 4.00E3–4.00E7.

3. *What are the characteristics of typical angina pectoris?* Discomfort of myocardial ischemic origin (angina pectoris) is discomfort that is precipitated by effort or emotion and promptly relieved by rest, sublingual nitroglycerin (that is, nitroglycerin tablets that are placed under the tongue), or other rapidly acting nitrates. Typically, the discomfort is located in the chest (usually substernal) and described as pressing, crushing, squeezing, burning, aching, or oppressive. Sharp, sticking, or cramping discomfort is less common. Discomfort occurring with activity or emotion should be described specifically as to timing and usual inciting factors (type and intensity), character, location, radiation, duration, and response to nitrate treatment or rest.

4. *What is atypical angina? Atypical angina* describes discomfort or pain from myocardial ischemia that is felt in places other than the chest. The common sites of cardiac pain are the inner aspect of the left arm, neck, jaw(s), upper abdomen, and back, but the discomfort or pain can be elsewhere. When pain of cardiac ischemic origin presents in an atypical site in the absence of chest discomfort, the source of the pain may be difficult to diagnose. To represent atypical angina, your discomfort or pain should have precipitating and relieving factors similar to those of typical chest discomfort, and we must have objective medical evidence of myocardial ischemia; for example, ECG or ETT evidence or appropriate medically acceptable imaging.

5. *What is anginal equivalent?* Often, individuals with IHD will complain of shortness of breath (dyspnea) on exertion without chest pain or discomfort. In a minority of such situations, the shortness of breath is due to myocardial ischemia; this is called *anginal equivalent*. To represent anginal equivalent, your shortness of breath should have precipitating and relieving factors similar to those of typical chest discomfort, and we must have objective medical evidence of myocardial ischemia; for example, ECG or ETT evidence or appropriate medically acceptable imaging. In these situations, it is essential to establish objective evidence of myocardial ischemia to ensure that you do not have effort dyspnea due to non-ischemic or non-cardiac causes.

6. *What is variant angina?*

a. *Variant angina* (Prinzmetal's angina, vasospastic angina) refers to the occurrence of anginal episodes at rest, especially at night, accompanied by transitory ST segment elevation (or, at times, ST depression) on an ECG. It is due to severe spasm of a coronary artery, causing ischemia of the heart wall, and is often accompanied by major ventricular arrhythmias, such as ventricular tachycardia. We will consider variant angina under 4.04 only if you have spasm of a coronary artery in relation to an obstructive lesion of the vessel. If you have an arrhythmia as a result of variant angina, we may consider your impairment under 4.05.

b. Variant angina may also occur in the absence of obstructive coronary disease. In this situation, an ETT will not demonstrate ischemia. The diagnosis will be established by showing the typical transitory ST segment changes during attacks of pain, and the absence of obstructive lesions shown by catheterization. Treatment in cases where there is no obstructive coronary disease is limited to medications that reduce coronary vasospasm, such as calcium channel blockers and nitrates. In such situations, we will consider the frequency of anginal episodes despite prescribed treatment when evaluating your residual functional capacity.

c. Vasospasm that is catheter-induced during coronary angiography is not variant angina.

7. *What is silent ischemia?*

a. Myocardial ischemia, and even myocardial infarction, can occur without perception of pain or any other symptoms; when this happens, we call it *silent ischemia*. Pain sensitivity may be altered by a variety of diseases, most notably diabetes mellitus and other neuropathic disorders. Individuals also vary in their threshold for pain.

b. Silent ischemia occurs most often in:

(i) Individuals with documented past myocardial infarction or established angina without prior infarction who do not have chest pain on ETT, but have a positive test with ischemic abnormality on ECG, perfusion scan, or other appropriate medically acceptable imaging.

(ii) Individuals with documented past myocardial infarction or angina who have ST segment changes on ambulatory monitoring (Holter monitoring) that are similar to those that occur during episodes of angina. ST depression shown on the ambulatory recording should not be interpreted as positive for ischemia unless similar depression is also seen during chest pain episodes annotated in the

diary that the individual keeps while wearing the Holter monitor.

c. ST depression can result from a variety of factors, such as postural changes and variations in cardiac sympathetic tone. In addition, there are differences in how different Holter monitors record the electrical responses. Therefore, we do not consider the Holter monitor reliable for the diagnosis of silent ischemia except in the situation described in 4.00E7b(ii).

8. *What other sources of chest discomfort are there?* Chest discomfort of nonischemic origin may result from other cardiac impairments, such as pericarditis. Noncardiac impairments may also produce symptoms mimicking that of myocardial ischemia. These impairments include acute anxiety or panic attacks, gastrointestinal tract disorders, such as esophageal spasm, esophagitis, hiatal hernia, biliary tract disease, gastritis, peptic ulcer, and pancreatitis, and musculoskeletal syndromes, such as chest wall muscle spasm, chest wall syndrome (especially after coronary bypass surgery), costochondritis, and cervical or dorsal spine arthritis. Hyperventilation may also mimic ischemic discomfort. Thus, in the absence of documented myocardial ischemia, such disorders should be considered as possible causes of chest discomfort.

9. *How do we evaluate IHD using 4.04?*

a. We must have objective evidence, as described under 4.00C, that your symptoms are due to myocardial ischemia.

b. Listing-level changes on the ECG in 4.04A1 are the classically accepted changes of horizontal or downsloping ST depression occurring both during exercise and recovery. Although we recognize that ischemic changes may at times occur only during exercise or recovery, and may at times be upsloping with only junctional ST depression, such changes can be false positive; that is, occur in the absence of ischemia. Diagnosis of ischemia in this situation requires radionuclide or echocardiogram confirmation. See 4.00C12 and 4.00C13.

c. Also in 4.04A1, we require that the depression of the ST segment last for at least 1 minute of recovery because ST depression that occurs during exercise but that rapidly normalizes in recovery is a common false-positive response.

d. In 4.04A2, we specify that the ST elevation must be in non-infarct leads during both exercise and recovery. This is because, in the absence of ECG signs of prior infarction, ST elevation during exercise denotes ischemia, usually severe, requiring immediate termination of exercise. However, if there is baseline ST elevation in association with a prior infarction or ventricular aneurysm, further ST elevation during exercise does not necessarily denote ischemia and could be a false-positive ECG response. Diagnosis of ischemia in this situation requires radionuclide or echocardiogram confirmation. See 4.00C12 and 4.00C13.

e. Listing 4.04A3 requires a decrease in systolic blood pressure below the baseline level (taken in the standing position immediately prior to exercise) or below any systolic pressure reading recorded during exercise. This is the same finding required in 4.02B3c. See 4.00D4d for full details.

f. In 4.04B, each of the three ischemic episodes must require revascularization or be not amenable to treatment. *Revascularization* means angioplasty (with or without stent placement) or bypass surgery. However, reocclusion that occurs after a revascularization procedure but during the same hospitalization and that requires a second procedure during the same hospitalization will not be counted as another ischemic episode. Not amenable means that the revascularization procedure could not be done because of another medical impairment or because the vessel was not suitable for revascularization.

g. We will use 4.04C only when you have symptoms due to myocardial ischemia as described in 4.00E3–4.00E7 while on a regimen of prescribed treatment, you are at risk for exercise testing (see 4.00C8), and we do not have a timely ETT or a timely normal drug-induced stress test for you. See 4.00C9 for what we mean by a timely test.

h. In 4.04C1 the term *nonbypassed* means that the blockage is in a vessel that is potentially bypassable; that is, large enough to be bypassed and considered to be a cause of your ischemia. These vessels are usually major arteries or one of a major artery's major branches. A vessel that has become obstructed again after angioplasty or stent placement and has remained obstructed or is not amenable to another revascularization is considered a nonbypassed vessel for purposes of this listing. When you have had revascularization, we will not use the pre-operative findings to assess the current severity of your coronary artery disease under 4.04C, although we will consider the severity and duration of your impairment prior to your surgery in making our determination or decision.

F. Evaluating Arrhythmias

1. *What is an arrhythmia?* An *arrhythmia* is a change in the regular beat of the heart. Your heart may seem to skip a beat or beat irregularly, very quickly (tachycardia), or very slowly (bradycardia).

2. *What are the different types of arrhythmias?*

a. There are many types of arrhythmias. Arrhythmias are identified by where they occur in the heart (atria or ventricles) and by what happens to the heart's rhythm when they occur.

b. Arrhythmias arising in the cardiac atria (upper chambers of the heart) are called

atrial or supraventricular arrhythmias. Ventricular arrhythmias begin in the ventricles (lower chambers). In general, ventricular arrhythmias caused by heart disease are the most serious.

3. *How do we evaluate arrhythmias using 4.05?*

a. We will use 4.05 when you have arrhythmias that are not fully controlled by medication, an implanted pacemaker, or an implanted cardiac defibrillator and you have uncontrolled recurrent episodes of syncope or near syncope. If your arrhythmias are controlled, we will evaluate your underlying heart disease using the appropriate listing. For other considerations when we evaluate arrhythmias in the presence of an implanted cardiac defibrillator, see 4.00F4.

b. We consider *near syncope* to be a period of altered consciousness, since syncope is a loss of consciousness or a faint. It is not merely a feeling of light-headedness, momentary weakness, or dizziness.

c. For purposes of 4.05, there must be a documented association between the syncope or near syncope and the recurrent arrhythmia. The recurrent arrhythmia, not some other cardiac or non-cardiac disorder, must be established as the cause of the associated symptom. This documentation of the association between the symptoms and the arrhythmia may come from the usual diagnostic methods, including Holter monitoring (also called ambulatory electrocardiography) and tilt-table testing with a concurrent ECG. Although an arrhythmia may be a coincidental finding on an ETT, we will not purchase an ETT to document the presence of a cardiac arrhythmia.

4. *What will we consider when you have an implanted cardiac defibrillator and you do not have arrhythmias that meet the requirements of 4.05?*

a. Implanted cardiac defibrillators are used to prevent sudden cardiac death in individuals who have had, or are at high risk for, cardiac arrest from life-threatening ventricular arrhythmias. The largest group at risk for sudden cardiac death consists of individuals with cardiomyopathy (ischemic or non-ischemic) and reduced ventricular function. However, life-threatening ventricular arrhythmias can also occur in individuals with little or no ventricular dysfunction. The shock from the implanted cardiac defibrillator is a unique form of treatment; it rescues an individual from what may have been cardiac arrest. However, as a consequence of the shock(s), individuals may experience psychological distress, which we may evaluate under the mental disorders listings in 12.00ff.

b. Most implantable cardiac defibrillators have rhythm-correcting and pacemaker capabilities. In some individuals, these functions may result in the termination of ventricular arrhythmias without an otherwise painful shock. (The shock is like being kicked in the chest.) Implanted cardiac defibrillators may deliver inappropriate shocks, often repeatedly, in response to benign arrhythmias or electrical malfunction. Also, exposure to strong electrical or magnetic fields, such as from MRI (magnetic resonance imaging), can trigger or reprogram an implanted cardiac defibrillator, resulting in inappropriate shocks. We must consider the frequency of, and the reason(s) for, the shocks when evaluating the severity and duration of your impairment.

c. In general, the exercise limitations imposed on individuals with an implanted cardiac defibrillator are those dictated by the underlying heart impairment. However, the exercise limitations may be greater when the implanted cardiac defibrillator delivers an inappropriate shock in response to the increase in heart rate with exercise, or when there is exercise-induced ventricular arrhythmia.

G. Evaluating Peripheral Vascular Disease

1. *What is peripheral vascular disease (PVD)?* Generally, *PVD* is any impairment that affects either the arteries (peripheral arterial disease) or the veins (venous insufficiency) in the extremities, particularly the lower extremities. The usual effect is blockage of the flow of blood either from the heart (arterial) or back to the heart (venous). If you have peripheral arterial disease, you may have pain in your calf after walking a distance that goes away when you rest (intermittent claudication); at more advanced stages, you may have pain in your calf at rest or you may develop ulceration or gangrene. If you have venous insufficiency, you may have swelling, varicose veins, skin pigmentation changes, or skin ulceration.

2. *How do we assess limitations resulting from PVD?* We will assess your limitations based on your symptoms together with physical findings, Doppler studies, other appropriate non-invasive studies, or angiographic findings. However, if the PVD has resulted in amputation, we will evaluate any limitations related to the amputation under the musculoskeletal listings, 1.00ff.

3. *What is brawny edema? Brawny edema* (4.11A) is swelling that is usually dense and feels firm due to the presence of increased connective tissue; it is also associated with characteristic skin pigmentation changes. It is not the same thing as pitting edema. Brawny edema generally does not pit (indent on pressure), and the terms are not interchangeable. Pitting edema does not satisfy the requirements of 4.11A.

4. *What is lymphedema and how will we evaluate it?*

a. *Lymphedema* is edema of the extremities due to a disorder of the lymphatic circulation; at its worst, it is called elephantiasis. Primary lymphedema is caused by abnormal

development of lymph vessels and may be present at birth (congenital lymphedema), but more often develops during the teens (lymphedema praecox). It may also appear later, usually after age 35 (lymphedema tarda). Secondary lymphedema is due to obstruction or destruction of normal lymphatic channels due to tumor, surgery, repeated infections, or parasitic infection such as filariasis. Lymphedema most commonly affects one extremity.

b. Lymphedema does not meet the requirements of 4.11, although it may medically equal the severity of that listing. We will evaluate lymphedema by considering whether the underlying cause meets or medically equals any listing or whether the lymphedema medically equals a cardiovascular listing, such as 4.11, or a musculoskeletal listing, such as 1.02A or 1.03. If no listing is met or medically equaled, we will evaluate any functional limitations imposed by your lymphedema when we assess your residual functional capacity.

5. *When will we purchase exercise Doppler studies for evaluating peripheral arterial disease (PAD)?* If we need additional evidence of your PAD, we will generally purchase exercise Doppler studies (see 4.00C16 and 4.00C17) when your resting ankle/brachial systolic blood pressure ratio is at least 0.50 but less than 0.80, and only rarely when it is 0.80 or above. We will not purchase exercise Doppler testing if you have a disease that results in abnormal arterial calcification or small vessel disease, but will use your resting toe systolic blood pressure or resting toe/brachial systolic blood pressure ratio. (See 4.00G7c and 4.00G8.) There are no current medical standards for evaluating exercise toe pressures. Because any exercise test stresses your entire cardiovascular system, we will purchase exercise Doppler studies only after an MC, preferably one with experience in the care of patients with cardiovascular disease, has determined that the test would not present a significant risk to you and that there is no other medical reason not to purchase the test (see 4.00C6, 4.00C7, and 4.00C8).

6. *Are there any other studies that are helpful in evaluating PAD?* Doppler studies done using a recording ultrasonic Doppler unit and strain-gauge plethysmography are other useful tools for evaluating PAD. A recording Doppler, which prints a tracing of the arterial pulse wave in the femoral, popliteal, dorsalis pedis, and posterior tibial arteries, is an excellent evaluation tool to compare wave forms in normal and compromised peripheral blood flow. Qualitative analysis of the pulse wave is very helpful in the overall assessment of the severity of the occlusive disease. Tracings are especially helpful in assessing severity if you have small vessel disease related to diabetes mellitus or other diseases with similar vascular changes, or diseases causing medial calcifications when ankle pressure is either normal or falsely high.

7. *How do we evaluate PAD under 4.12?*

a. The ankle blood pressure referred to in 4.12A and B is the higher of the pressures recorded from the posterior tibial and dorsalis pedis arteries in the affected leg. The higher pressure recorded from the two sites is the more significant measurement in assessing the extent of arterial insufficiency. Techniques for obtaining ankle systolic blood pressures include Doppler (See 4.00C16 and 4.00C17), plethysmographic studies, or other techniques. We will request any available tracings generated by these studies so that we can review them.

b. In 4.12A, the ankle/brachial systolic blood pressure ratio is the ratio of the systolic blood pressure at the ankle to the systolic blood pressure at the brachial artery; both taken at the same time while you are lying on your back. We do not require that the ankle and brachial pressures be taken on the same side of your body. This is because, as with the ankle pressure, we will use the higher brachial systolic pressure measured. Listing 4.12A is met when your resting ankle/brachial systolic blood pressure ratio is less than 0.50. If your resting ankle/brachial systolic blood pressure ratio is 0.50 or above, we will use 4.12B to evaluate the severity of your PAD, unless you also have a disease causing abnormal arterial calcification or small vessel disease, such as diabetes mellitus. See 4.00G7c and 4.00G8.

c. We will use resting toe systolic blood pressures or resting toe/brachial systolic blood pressure ratios (determined the same way as ankle/brachial ratios, see 4.00G7b) when you have intermittent claudication and a disease that results in abnormal arterial calcification (for example, Monckeberg's sclerosis or diabetes mellitus) or small vessel disease (for example, diabetes mellitus). These diseases may result in misleadingly high blood pressure readings at the ankle. However, high blood pressures due to vascular changes related to these diseases seldom occur at the toe level. While the criteria in 4.12C and 4.12D are intended primarily for individuals who have a disease causing abnormal arterial calcification or small vessel disease, we may also use them for evaluating anyone with PAD.

8. *How are toe pressures measured?* Toe pressures are measured routinely in most vascular laboratories through one of three methods: most frequently, photoplethysmography; less frequently, plethysmography using strain gauge cuffs; and Doppler ultrasound. Toe pressure can also be measured by using any blood pressure cuff that fits snugly around the big toe and is neither too tight nor too loose. A neonatal cuff or a cuff designed for use on fingers or toes can be used in the measurement of toe pressure.

9. *How do we use listing 4.12 if you have had a peripheral graft?* Peripheral grafting serves the same purpose as coronary grafting; that is, to bypass a narrow or obstructed arterial segment. If intermittent claudication recurs or persists after peripheral grafting, we may purchase Doppler studies to assess the flow of blood through the bypassed vessel and to establish the current severity of the peripheral arterial impairment. However, if you have had peripheral grafting done for your PAD, we will not use the findings from before the surgery to assess the current severity of your impairment, although we will consider the severity and duration of your impairment prior to your surgery in making our determination or decision.

H. Evaluating Other Cardiovascular Impairments

1. *How will we evaluate hypertension?* Because *hypertension* (high blood pressure) generally causes disability through its effects on other body systems, we will evaluate it by reference to the specific body system(s) affected (heart, brain, kidneys, or eyes) when we consider its effects under the listings. We will also consider any limitations imposed by your hypertension when we assess your residual functional capacity.

2. *How will we evaluate symptomatic congenital heart disease? Congenital heart disease* is any abnormality of the heart or the major blood vessels that is present at birth. Because of improved treatment methods, more children with congenital heart disease are living to adulthood. Although some types of congenital heart disease may be corrected by surgery, many individuals with treated congenital heart disease continue to have problems throughout their lives (symptomatic congenital heart disease). If you have congenital heart disease that results in chronic heart failure with evidence of ventricular dysfunction or in recurrent arrhythmias, we will evaluate your impairment under 4.02 or 4.05. Otherwise, we will evaluate your impairment under 4.06.

3. *What is cardiomyopathy and how will we evaluate it? Cardiomyopathy* is a disease of the heart muscle. The heart loses its ability to pump blood (heart failure), and in some instances, heart rhythm is disturbed, leading to irregular heartbeats (arrhythmias). Usually, the exact cause of the muscle damage is never found (idiopathic cardiomyopathy). There are various types of cardiomyopathy, which fall into two major categories: *Ischemic* and *nonischemic* cardiomyopathy. Ischemic cardiomyopathy typically refers to heart muscle damage that results from coronary artery disease, including heart attacks. Nonischemic cardiomyopathy includes several types: Dilated, hypertrophic, and restrictive. We will evaluate cardiomyopathy under 4.02, 4.04, 4.05, or 11.04, depending on its effects on you.

4. *How will we evaluate valvular heart disease?* We will evaluate valvular heart disease under the listing appropriate for its effect on you. Thus, we may use 4.02, 4.04, 4.05, 4.06, or an appropriate neurological listing in 11.00ff.

5. *What do we consider when we evaluate heart transplant recipients?*

a. After your heart transplant, we will consider you disabled for 1 year following the surgery because there is a greater likelihood of rejection of the organ and infection during the first year.

b. However, heart transplant patients generally meet our definition of disability before they undergo transplantation. We will determine the onset of your disability based on the facts in your case.

c. We will not assume that you became disabled when your name was placed on a transplant waiting list. This is because you may be placed on a waiting list soon after diagnosis of the cardiac disorder that may eventually require a transplant. Physicians recognize that candidates for transplantation often have to wait months or even years before a suitable donor heart is found, so they place their patients on the list as soon as permitted.

d. When we do a continuing disability review to determine whether you are still disabled, we will evaluate your residual impairment(s), as shown by symptoms, signs, and laboratory findings, including any side effects of medication. We will consider any remaining symptoms, signs, and laboratory findings indicative of cardiac dysfunction in deciding whether medical improvement (as defined in §§404.1594 and 416.994) has occurred.

6. *When does an aneurysm have ''dissection not controlled by prescribed treatment,'' as required under 4.10?* An aneurysm (or bulge in the aorta or one of its major branches) is *dissecting* when the inner lining of the artery begins to separate from the arterial wall. We consider the dissection not controlled when you have persistence of chest pain due to progression of the dissection, an increase in the size of the aneurysm, or compression of one or more branches of the aorta supplying the heart, kidneys, brain, or other organs. An aneurysm with dissection can cause heart failure, renal (kidney) failure, or neurological complications. If you have an aneurysm that does not meet the requirements of 4.10 and you have one or more of these associated conditions, we will evaluate the condition(s) using the appropriate listing.

7. *What is hyperlipidemia and how will we evaluate it? Hyperlipidemia* is the general term for an elevation of any or all of the lipids (fats or cholesterol) in the blood; for example, hypertriglyceridemia, hypercholesterolemia, and hyperlipoproteinemia. These disorders of

lipoprotein metabolism and transport can cause defects throughout the body. The effects most likely to interfere with function are those produced by atherosclerosis (narrowing of the arteries) and coronary artery disease. We will evaluate your lipoprotein disorder by considering its effects on you.

8. *What is Marfan syndrome and how will we evaluate it?*

a. Marfan syndrome is a genetic connective tissue disorder that affects multiple body systems, including the skeleton, eyes, heart, blood vessels, nervous system, skin, and lungs. There is no specific laboratory test to diagnose Marfan syndrome. The diagnosis is generally made by medical history, including family history, physical examination, including an evaluation of the ratio of arm/leg size to trunk size, a slit lamp eye examination, and a heart test(s), such as an echocardiogram. In some cases, a genetic analysis may be useful, but such analyses may not provide any additional helpful information.

b. The effects of Marfan syndrome can range from mild to severe. In most cases, the disorder progresses as you age. Most individuals with Marfan syndrome have abnormalities associated with the heart and blood vessels. Your heart's mitral valve may leak, causing a heart murmur. Small leaks may not cause symptoms, but larger ones may cause shortness of breath, fatigue, and palpitations. Another effect is that the wall of the aorta may be weakened and abnormally stretch (aortic dilation). This aortic dilation may tear, dissect, or rupture, causing serious heart problems or sometimes sudden death. We will evaluate the manifestations of your Marfan syndrome under the appropriate body system criteria, such as 4.10, or if necessary, consider the functional limitations imposed by your impairment.

I. Other Evaluation Issues

1. *What effect does obesity have on the cardiovascular system and how will we evaluate it?* Obesity is a medically determinable impairment that is often associated with disorders of the cardiovascular system. Disturbance of this system can be a major cause of disability if you have obesity. Obesity may affect the cardiovascular system because of the increased workload the additional body mass places on the heart. Obesity may make it harder for the chest and lungs to expand. This can mean that the respiratory system must work harder to provide needed oxygen. This in turn would make the heart work harder to pump blood to carry oxygen to the body. Because the body would be working harder at rest, its ability to perform additional work would be less than would otherwise be expected. Thus, the combined effects of obesity with cardiovascular impairments can be greater than the effects of each of the impairments considered separately. We must consider any additional and cumulative effects of obesity when we determine whether you have a severe cardiovascular impairment or a listing-level cardiovascular impairment (or a combination of impairments that medically equals the severity of a listed impairment), and when we assess your residual functional capacity.

2. *How do we relate treatment to functional status?* In general, conclusions about the severity of a cardiovascular impairment cannot be made on the basis of type of treatment rendered or anticipated. The amount of function restored and the time required for improvement after treatment (medical, surgical, or a prescribed program of progressive physical activity) vary with the nature and extent of the disorder, the type of treatment, and other factors. Depending upon the timing of this treatment in relation to the alleged onset date of disability, we may need to defer evaluation of the impairment for a period of up to 3 months from the date treatment began to permit consideration of treatment effects, unless we can make a determination or decision using the evidence we have. See 4.00B4.

3. *How do we evaluate impairments that do not meet one of the cardiovascular listings?*

a. These listings are only examples of common cardiovascular impairments that we consider severe enough to prevent you from doing any gainful activity. If your severe impairment(s) does not meet the criteria of any of these listings, we must also consider whether you have an impairment(s) that satisfies the criteria of a listing in another body system.

b. If you have a severe medically determinable impairment(s) that does not meet a listing, we will determine whether your impairments(s) medically equals a listing. (See §§ 404.1526 and 416.926.) If you have a severe impairment(s) that does not meet or medically equal the criteria of a listing, you may or may not have the residual functional capacity to engage in substantial gainful activity. Therefore, we proceed to the fourth and, if necessary, the fifth steps of the sequential evaluation process in §§ 404.1520 and 416.920. If you are an adult, we use the rules in §§ 404.1594 or 416.994, as appropriate, when we decide whether you continue to be disabled.

4.01 CATEGORY OF IMPAIRMENTS, CARDIOVASCULAR SYSTEM

4.02 *Chronic heart failure* while on a regimen of prescribed treatment, with symptoms and signs described in 4.00D2. The required level of severity for this impairment is met when the requirements in *both A and B* are satisfied.

A. Medically documented presence of one of the following:

1. Systolic failure (see 4.00D1a(i)), with left ventricular end diastolic dimensions greater than 6.0 cm or ejection fraction of 30 percent

or less during a period of stability (not during an episode of acute heart failure); or

2. Diastolic failure (see 4.00D1a(ii)), with left ventricular posterior wall plus septal thickness totaling 2.5 cm or greater on imaging, with an enlarged left atrium greater than or equal to 4.5 cm, with normal or elevated ejection fraction during a period of stability (not during an episode of acute heart failure);

AND

B. Resulting in one of the following:

1. Persistent symptoms of heart failure which very seriously limit the ability to independently initiate, sustain, or complete activities of daily living in an individual for whom an MC, preferably one experienced in the care of patients with cardiovascular disease, has concluded that the performance of an exercise test would present a significant risk to the individual; or

2. Three or more separate episodes of acute congestive heart failure within a consecutive 12-month period (see 4.00A3e), with evidence of fluid retention (see 4.00D2b(ii)) from clinical and imaging assessments at the time of the episodes, requiring acute extended physician intervention such as hospitalization or emergency room treatment for 12 hours or more, separated by periods of stabilization (see 4.00D4c); or

3. Inability to perform on an exercise tolerance test at a workload equivalent to 5 METs or less due to:

a. Dyspnea, fatigue, palpitations, or chest discomfort; or

b. Three or more consecutive premature ventricular contractions (ventricular tachycardia), or increasing frequency of ventricular ectopy with at least 6 premature ventricular contractions per minute; or

c. Decrease of 10 mm Hg or more in systolic pressure below the baseline systolic blood pressure or the preceding systolic pressure measured during exercise (see 4.00D4d) due to left ventricular dysfunction, despite an increase in workload; or

d. Signs attributable to inadequate cerebral perfusion, such as ataxic gait or mental confusion.

4.04 *Ischemic heart disease*, with symptoms due to myocardial ischemia, as described in 4.00E3–4.00E7, while on a regimen of prescribed treatment (see 4.00B3 if there is no regimen of prescribed treatment), with one of the following:

A. Sign-or symptom-limited exercise tolerance test demonstrating at least one of the following manifestations at a workload equivalent to 5 METs or less:

1. Horizontal or downsloping depression, in the absence of digitalis glycoside treatment or hypokalemia, of the ST segment of at least −0.10 millivolts (−1.0 mm) in at least 3 consecutive complexes that are on a level baseline in any lead other than aVR, and depression of at least −0.10 millivolts lasting for at least 1 minute of recovery; or

2. At least 0.1 millivolt (1 mm) ST elevation above resting baseline in non-infarct leads during both exercise and 1 or more minutes of recovery; or

3. Decrease of 10 mm Hg or more in systolic pressure below the baseline blood pressure or the preceding systolic pressure measured during exercise (see 4.00E9e) due to left ventricular dysfunction, despite an increase in workload; or

4. Documented ischemia at an exercise level equivalent to 5 METs or less on appropriate medically acceptable imaging, such as radionuclide perfusion scans or stress echocardiography.

OR

B. Three separate ischemic episodes, each requiring revascularization or not amenable to revascularization (see 4.00E9f), within a consecutive 12-month period (see 4.00A3e).

OR

C. Coronary artery disease, demonstrated by angiography (obtained independent of Social Security disability evaluation) or other appropriate medically acceptable imaging, and in the absence of a timely exercise tolerance test or a timely normal drug-induced stress test, an MC, preferably one experienced in the care of patients with cardiovascular disease, has concluded that performance of exercise tolerance testing would present a significant risk to the individual, with both 1 and 2:

1. Angiographic evidence showing:

a. 50 percent or more narrowing of a nonbypassed left main coronary artery; or

b. 70 percent or more narrowing of another nonbypassed coronary artery; or

c. 50 percent or more narrowing involving a long (greater than 1 cm) segment of a nonbypassed coronary artery; or

d. 50 percent or more narrowing of at least two nonbypassed coronary arteries; or

e. 70 percent or more narrowing of a bypass graft vessel; and

2. Resulting in very serious limitations in the ability to independently initiate, sustain, or complete activities of daily living.

4.05 *Recurrent arrhythmias*, not related to reversible causes, such as electrolyte abnormalities or digitalis glycoside or antiarrhythmic drug toxicity, resulting in uncontrolled (see 4.00A3f), recurrent (see 4.00A3c) episodes of cardiac syncope or near syncope (see 4.00F3b), despite prescribed treatment (see 4.00B3 if there is no prescribed treatment), and documented by resting or ambulatory (Holter) electrocardiography, or by other appropriate medically acceptable testing, coincident with the occurrence of syncope or near syncope (see 4.00F3c).

4.06 *Symptomatic congenital heart disease* (cyanotic or acyanotic), documented by appropriate medically acceptable imaging (see 4.00A3d) or cardiac catheterization, with one of the following:

A. Cyanosis at rest, and:

1. Hematocrit of 55 percent or greater; or

2. Arterial O_2 saturation of less than 90 percent in room air, or resting arterial PO_2 of 60 Torr or less.

OR

B. Intermittent right-to-left shunting resulting in cyanosis on exertion (e.g., Eisenmenger's physiology) and with arterial PO_2 of 60 Torr or less at a workload equivalent to 5 METs or less.

OR

C. Secondary pulmonary vascular obstructive disease with pulmonary arterial systolic pressure elevated to at least 70 percent of the systemic arterial systolic pressure.

4.09 *Heart transplant.* Consider under a disability for 1 year following surgery; thereafter, evaluate residual impairment under the appropriate listing.

4.10 *Aneurysm of aorta or major branches*, due to any cause (e.g., atherosclerosis, cystic medial necrosis, Marfan syndrome, trauma), demonstrated by appropriate medically acceptable imaging, with dissection not controlled by prescribed treatment (see 4.00H6).

4.11 *Chronic venous insufficiency* of a lower extremity with incompetency or obstruction of the deep venous system and one of the following:

A. Extensive brawny edema (see 4.00G3) involving at least two-thirds of the leg between the ankle and knee or the distal one-third of the lower extremity between the ankle and hip.

OR

B. Superficial varicosities, stasis dermatitis, and either recurrent ulceration or persistent ulceration that has not healed following at least 3 months of prescribed treatment.

4.12 *Peripheral arterial disease*, as determined by appropriate medically acceptable imaging (see 4.00A3d, 4.00G2, 4.00G5, and 4.00G6), causing intermittent claudication (see 4.00G1) and one of the following:

A. Resting ankle/brachial systolic blood pressure ratio of less than 0.50.

OR

B. Decrease in systolic blood pressure at the ankle on exercise (see 4.00G7a and 4.00C16–4.00C17) of 50 percent or more of pre-exercise level and requiring 10 minutes or more to return to pre-exercise level.

OR

C. Resting toe systolic pressure of less than 30 mm Hg (see 4.00G7c and 4.00G8).

OR

D. Resting toe/brachial systolic blood pressure ratio of less than 0.40 (see 4.00G7c).

5.00 DIGESTIVE SYSTEM

A. *What kinds of disorders do we consider in the digestive system?* Disorders of the digestive system include gastrointestinal hemorrhage, hepatic (liver) dysfunction, inflammatory bowel disease, short bowel syndrome, and malnutrition. They may also lead to complications, such as obstruction, or be accompanied by manifestations in other body systems.

B. *What documentation do we need?* We need a record of your medical evidence, including clinical and laboratory findings. The documentation should include appropriate medically acceptable imaging studies and reports of endoscopy, operations, and pathology, as appropriate to each listing, to document the severity and duration of your digestive disorder. Medically acceptable imaging includes, but is not limited to, x-ray imaging, sonography, computerized axial tomography (CAT scan), magnetic resonance imaging (MRI), and radionuclide scans. *Appropriate* means that the technique used is the proper one to support the evaluation and diagnosis of the disorder. The findings required by these listings must occur within the period we are considering in connection with your application or continuing disability review.

C. *How do we consider the effects of treatment?*

1. Digestive disorders frequently respond to medical or surgical treatment; therefore, we generally consider the severity and duration of these disorders within the context of prescribed treatment.

2. We assess the effects of treatment, including medication, therapy, surgery, or any other form of treatment you receive, by determining if there are improvements in the symptoms, signs, and laboratory findings of your digestive disorder. We also assess any side effects of your treatment that may further limit your functioning.

3. To assess the effects of your treatment, we may need information about:

a. The treatment you have been prescribed (for example, the type of medication or therapy, or your use of parenteral (intravenous) nutrition or supplemental enteral nutrition via a gastrostomy);

b. The dosage, method, and frequency of administration;

c. Your response to the treatment;

d. Any adverse effects of such treatment; and

e. The expected duration of the treatment.

4. Because the effects of treatment may be temporary or long-term, in most cases we need information about the impact of your treatment, including its expected duration and side effects, over a sufficient period of time to help us assess its outcome. When adverse effects of treatment contribute to the

severity of your impairment(s), we will consider the duration or expected duration of the treatment when we assess the duration of your impairment(s).

5. If you need parenteral (intravenous) nutrition or supplemental enteral nutrition via a gastrostomy to avoid debilitating complications of a digestive disorder, this treatment will not, in itself, indicate that you are unable to do any gainful activity, except under 5.07, short bowel syndrome (see 5.00F).

6. If you have not received ongoing treatment or have not had an ongoing relationship with the medical community despite the existence of a severe impairment(s), we will evaluate the severity and duration of your digestive impairment on the basis of the current medical and other evidence in your case record. If you have not received treatment, you may not be able to show an impairment that meets the criteria of one of the digestive system listings, but your digestive impairment may medically equal a listing or be disabling based on consideration of your residual functional capacity, age, education, and work experience.

D. *How do we evaluate chronic liver disease?*

1. *General. Chronic liver disease* is characterized by liver cell necrosis, inflammation, or scarring (fibrosis or cirrhosis), due to any cause, that persists for more than 6 months. Chronic liver disease may result in portal hypertension, cholestasis (suppression of bile flow), extrahepatic manifestations, or liver cancer. (We evaluate liver cancer under 13.19.) Significant loss of liver function may be manifested by hemorrhage from varices or portal hypertensive gastropathy, ascites (accumulation of fluid in the abdominal cavity), hydrothorax (ascitic fluid in the chest cavity), or encephalopathy. There can also be progressive deterioration of laboratory findings that are indicative of liver dysfunction. Liver transplantation is the only definitive cure for end stage liver disease (ESLD).

2. *Examples of chronic liver disease* include, but are not limited to, chronic hepatitis, alcoholic liver disease, non-alcoholic steatohepatitis (NASH), primary biliary cirrhosis (PBC), primary sclerosing cholangitis (PSC), autoimmune hepatitis, hemochromatosis, drug-induced liver disease, Wilson's disease, and serum alpha-1 antitrypsin deficiency. Acute hepatic injury is frequently reversible, as in viral, drug-induced, toxin-induced, alcoholic, and ischemic hepatitis. In the absence of evidence of a chronic impairment, episodes of acute liver disease do not meet 5.05.

3. *Manifestations of chronic liver disease.*

a. *Symptoms* may include, but are not limited to, pruritis (itching), fatigue, nausea, loss of appetite, or sleep disturbances. Symptoms of chronic liver disease may have a poor correlation with the severity of liver disease and functional ability.

b. *Signs* may include, but are not limited to, jaundice, enlargement of the liver and spleen, ascites, peripheral edema, and altered mental status.

c. *Laboratory findings* may include, but are not limited to, increased liver enzymes, increased serum total bilirubin, increased ammonia levels, decreased serum albumin, and abnormal coagulation studies, such as increased International Normalized Ratio (INR) or decreased platelet counts. Abnormally low serum albumin or elevated INR levels indicate loss of synthetic liver function, with increased likelihood of cirrhosis and associated complications. However, other abnormal lab tests, such as liver enzymes, serum total bilirubin, or ammonia levels, may have a poor correlation with the severity of liver disease and functional ability. A liver biopsy may demonstrate the degree of liver cell necrosis, inflammation, fibrosis, and cirrhosis. If you have had a liver biopsy, we will make every reasonable effort to obtain the results; however, we will not purchase a liver biopsy. Imaging studies (CAT scan, ultrasound, MRI) may show the size and consistency (fatty liver, scarring) of the liver and document ascites (see 5.00D6).

4. *Chronic viral hepatitis infections.*

a. *General.*

(i) *Chronic viral hepatitis* infections are commonly caused by hepatitis C virus (HCV), and to a lesser extent, hepatitis B virus (HBV). Usually, these are slowly progressive disorders that persist over many years during which the symptoms and signs are typically nonspecific, intermittent, and mild (for example, fatigue, difficulty with concentration, or right upper quadrant pain). Laboratory findings (liver enzymes, imaging studies, liver biopsy pathology) and complications are generally similar in HCV and HBV. The spectrum of these chronic viral hepatitis infections ranges widely and includes an asymptomatic state; insidious disease with mild to moderate symptoms associated with fluctuating liver tests; extrahepatic manifestations; cirrhosis, both compensated and decompensated; ESLD with the need for liver transplantation; and liver cancer. Treatment for chronic viral hepatitis infections varies considerably based on medication tolerance, treatment response, adverse effects of treatment, and duration of the treatment. Comorbid disorders, such as HIV infection, may affect the clinical course of viral hepatitis infection(s) or may alter the response to medical treatment.

(ii) We evaluate all types of chronic viral hepatitis infections under 5.05 or any listing in an affected body system(s). If your impairment(s) does not meet or medically equal a listing, we will consider the effects of your hepatitis when we assess your residual functional capacity.

b. *Chronic hepatitis B virus (HBV) infection.*

(i) *Chronic HBV* infection is diagnosed by the detection of hepatitis B surface antigen (HBsAg) in the blood for at least 6 months. In addition, detection of the hepatitis B envelope antigen (HBeAg) suggests an increased likelihood of progression to cirrhosis and ESLD.

(ii) The therapeutic goal of treatment is to suppress HBV replication and thereby prevent progression to cirrhosis and ESLD. Treatment usually includes a combination of interferon injections and oral antiviral agents. Common adverse effects of treatment are the same as noted in 5.00D4c(ii) for HCV, and generally end within a few days after treatment is discontinued.

c. *Chronic hepatitis C virus (HCV) infection.*

(i) *Chronic HCV infection* is diagnosed by the detection of hepatitis C viral RNA in the blood for at least 6 months. Documentation of the therapeutic response to treatment is also monitored by the quantitative assay of serum HCV RNA (''HCV viral load''). Treatment usually includes a combination of interferon injections and oral ribavirin; whether a therapeutic response has occurred is usually assessed after 12 weeks of treatment by checking the HCV viral load. If there has been a substantial reduction in HCV viral load (also known as early viral response, or EVR), this reduction is predictive of a sustained viral response with completion of treatment. Combined therapy is commonly discontinued after 12 weeks when there is no early viral response, since in that circumstance there is little chance of obtaining a sustained viral response (SVR). Otherwise, treatment is usually continued for a total of 48 weeks.

(ii) Combined interferon and ribavirin treatment may have significant adverse effects that may require dosing reduction, planned interruption of treatment, or discontinuation of treatment. Adverse effects may include: Anemia (ribavirin-induced hemolysis), neutropenia, thrombocytopenia, fever, cough, fatigue, myalgia, arthralgia, nausea, loss of appetite, pruritis, and insomnia. Behavioral side effects may also occur. Influenza-like symptoms are generally worse in the first 4 to 6 hours after each interferon injection and during the first weeks of treatment. Adverse effects generally end within a few days after treatment is discontinued.

d. *Extrahepatic manifestations of HBV and HCV.* In addition to their hepatic manifestations, both HBV and HCV may have significant extrahepatic manifestations in a variety of body systems. These include, but are not limited to: Keratoconjunctivitis (sicca syndrome), glomerulonephritis, skin disorders (for example, lichen planus, porphyria cutanea tarda), neuropathy, and immune dysfunction (for example, cryoglobulinemia, Sjögren's syndrome, and vasculitis). The extrahepatic manifestations of HBV and HCV may not correlate with the severity of your hepatic impairment. If your impairment(s) does not meet or medically equal a listing in an affected body system(s), we will consider the effects of your extrahepatic manifestations when we assess your residual functional capacity.

5. *Gastrointestinal hemorrhage* (5.02 and 5.05A). Gastrointestinal hemorrhaging can result in hematemesis (vomiting of blood), melena (tarry stools), or hematochezia (bloody stools). Under 5.02, the required transfusions of at least 2 units of blood must be at least 30 days apart and occur at least three times during a consecutive 6-month period. Under 5.05A, *hemodynamic instability* is diagnosed with signs such as pallor (pale skin), diaphoresis (profuse perspiration), rapid pulse, low blood pressure, postural hypotension (pronounced fall in blood pressure when arising to an upright position from lying down) or syncope (fainting). Hemorrhaging that results in hemodynamic instability is potentially life-threatening and therefore requires hospitalization for transfusion and supportive care. Under 5.05A, we require only one hospitalization for transfusion of at least 2 units of blood.

6. *Ascites or hydrothorax* (5.05B) indicates significant loss of liver function due to chronic liver disease. We evaluate ascites or hydrothorax that is not attributable to other causes under 5.05B. The required findings must be present on at least two evaluations at least 60 days apart within a consecutive 6-month period and despite continuing treatment as prescribed.

7. *Spontaneous bacterial peritonitis* (5.05C) is an infectious complication of chronic liver disease. It is diagnosed by ascitic peritoneal fluid that is documented to contain an absolute neutrophil count of at least 250 cells/mm^3. The required finding in 5.05C is satisfied with one evaluation documenting peritoneal fluid infection. We do not evaluate other causes of peritonitis that are unrelated to chronic liver disease, such as tuberculosis, malignancy, and perforated bowel, under this listing. We evaluate these other causes of peritonitis under the appropriate body system listings.

8. *Hepatorenal syndrome* (5.05D) is defined as functional renal failure associated with chronic liver disease in the absence of underlying kidney pathology. Hepatorenal syndrome is documented by elevation of serum creatinine, marked sodium retention, and oliguria (reduced urine output). The requirements of 5.05D are satisfied with documentation of any one of the three laboratory findings on one evaluation. We do not evaluate known causes of renal dysfunction, such as glomerulonephritis, tubular necrosis, drug-induced renal disease, and renal infections, under this listing. We evaluate these other renal impairments under 6.00ff.

9. *Hepatopulmonary syndrome* (5.05E) is defined as arterial deoxygenation (hypoxemia)

that is associated with chronic liver disease due to intrapulmonary arteriovenous shunting and vasodilatation in the absence of other causes of arterial deoxygenation. Clinical manifestations usually include dyspnea, orthodeoxia (increasing hypoxemia with erect position), platypnea (improvement of dyspnea with flat position), cyanosis, and clubbing. The requirements of 5.05E are satisfied with documentation of any one of the findings on one evaluation. In 5.05E1, we require documentation of the altitude of the testing facility because altitude affects the measurement of arterial oxygenation. We will not purchase the specialized studies described in 5.05E2; however, if you have had these studies at a time relevant to your claim, we will make every reasonable effort to obtain the reports for the purpose of establishing whether your impairment meets 5.05E2.

10. *Hepatic encephalopathy* (5.05F).

a. *General*. Hepatic encephalopathy usually indicates severe loss of hepatocellular function. We define hepatic encephalopathy under 5.05F as a recurrent or chronic neuropsychiatric disorder, characterized by abnormal behavior, cognitive dysfunction, altered state of consciousness, and ultimately coma and death. The diagnosis is established by changes in mental status associated with fleeting neurological signs, including ''flapping tremor'' (asterixis), characteristic electroencephalographic (EEG) abnormalities, or abnormal laboratory values that indicate loss of synthetic liver function. We will not purchase the EEG testing described in 5.05F3b; however, if you have had this test at a time relevant to your claim, we will make every reasonable effort to obtain the report for the purpose of establishing whether your impairment meets 5.05F.

b. *Acute encephalopathy*. We will not evaluate your acute encephalopathy under 5.05F if it results from conditions other than chronic liver disease, such as vascular events and neoplastic diseases. We will evaluate these other causes of acute encephalopathy under the appropriate body system listings.

11. *End stage liver disease (ESLD) documented by scores from the SSA Chronic Liver Disease (SSA CLD) calculation* (5.05G).

a. We will use the SSA CLD score to evaluate your ESLD under 5.05G. We explain how we calculate the SSA CLD score in b. through g. of this section.

b. To calculate the SSA CLD score, we use a formula that includes three laboratory values: Serum total bilirubin (mg/dL), serum creatinine (mg/dL), and International Normalized Ratio (INR). The formula for the SSA CLD score calculation is:

$9.57 \times [\text{Log}_e(\text{serum creatinine mg/dL})]$
$+3.78 \times [\text{Log}_e(\text{serum total bilirubin mg/dL})]$
$+11.2 \times [\text{Log}_e(\text{INR})]$
$+6.43$

c. When we indicate ''Log_e'' in the formula for the SSA CLD score calculation, we mean the ''base *e* logarithm'' or ''natural logarithm'' (ln) of a numerical laboratory value, not the ''base 10 logarithm'' or ''common logarithm'' (log) of the laboratory value, and not the actual laboratory value. For example, if an individual has laboratory values of serum creatinine 1.2 mg/dL, serum total bilirubin 2.2 mg/dL, and INR 1.0, we would compute the SSA CLD score as follows:

$9.57 \times [\text{Log}_e(\text{serum creatinine 1.2 mg/dL}) = 0.182]$
$+3.78 \times [\text{Log}_e(\text{serum total bilirubin 2.2 mg/dL}) = 0.788]$
$+11.2 \times [\text{Log}_e(\text{INR 1.0}) = 0]$
$+6.43$

$= 1.74 + 2.98 + 0 + 6.43$
$= 11.15$, which is then rounded to an SSA CLD score of 11.

d. For any SSA CLD score calculation, all of the required laboratory values must have been obtained within 30 days of each other. If there are multiple laboratory values within the 30-day interval for any given laboratory test (serum total bilirubin, serum creatinine, or INR), we will use the highest value for the SSA CLD score calculation. We will round all laboratory values less than 1.0 up to 1.0.

e. Listing 5.05G requires two SSA CLD scores. The laboratory values for the second SSA CLD score calculation must have been obtained at least 60 days after the latest laboratory value for the first SSA CLD score and within the required 6-month period. We will consider the date of each SSA CLD score to be the date of the first laboratory value used for its calculation.

f. If you are in renal failure or on dialysis within a week of any serum creatinine test in the period used for the SSA CLD calculation, we will use a serum creatinine of 4, which is the maximum serum creatinine level allowed in the calculation, to calculate your SSA CLD score.

g. If you have the two SSA CLD scores required by 5.05G, we will find that your impairment meets the criteria of the listing from at least the date of the first SSA CLD score.

12. *Liver transplantation* (5.09) may be performed for metabolic liver disease, progressive liver failure, life-threatening complications of liver disease, hepatic malignancy, and acute fulminant hepatitis (viral, drug-induced, or toxin-induced). We will consider you to be disabled for 1 year from the date of the transplantation. Thereafter, we will evaluate your residual impairment(s) by considering the adequacy of post-transplant liver function, the requirement for post-transplant antiviral therapy, the frequency and severity of rejection episodes, comorbid complications, and all adverse treatment effects.

E. *How do we evaluate inflammatory bowel disease (IBD)?*

1. *Inflammatory bowel disease* (5.06) includes, but is not limited to, Crohn's disease and ulcerative colitis. These disorders, while distinct entities, share many clinical, laboratory, and imaging findings, as well as similar treatment regimens. Remissions and exacerbations of variable duration are the hallmark of IBD. Crohn's disease may involve the entire alimentary tract from the mouth to the anus in a segmental, asymmetric fashion. Obstruction, stenosis, fistulization, perineal involvement, and extraintestinal manifestations are common. Crohn's disease is rarely curable and recurrence may be a lifelong problem, even after surgical resection. In contrast, ulcerative colitis only affects the colon. The inflammatory process may be limited to the rectum, extend proximally to include any contiguous segment, or involve the entire colon. Ulcerative colitis may be cured by total colectomy.

2. Symptoms and signs of IBD include diarrhea, fecal incontinence, rectal bleeding, abdominal pain, fatigue, fever, nausea, vomiting, arthralgia, abdominal tenderness, palpable abdominal mass (usually inflamed loops of bowel) and perineal disease. You may also have signs or laboratory findings indicating malnutrition, such as weight loss, edema, anemia, hypoalbuminemia, hypokalemia, hypocalcemia, or hypomagnesemia.

3. IBD may be associated with significant extraintestinal manifestations in a variety of body systems. These include, but are not limited to, involvement of the eye (for example, uveitis, episcleritis, iritis); hepatobiliary disease (for example, gallstones, primary sclerosing cholangitis); urologic disease (for example, kidney stones, obstructive hydronephrosis); skin involvement (for example, erythema nodosum, pyoderma gangrenosum); or non-destructive inflammatory arthritis. You may also have associated thromboembolic disorders or vascular disease. These manifestations may not correlate with the severity of your IBD. If your impairment does not meet any of the criteria of 5.06, we will consider the effects of your extraintestinal manifestations in determining whether you have an impairment(s) that meets or medically equals another listing, and we will also consider the effects of your extraintestinal manifestations when we assess your residual functional capacity.

4. Surgical diversion of the intestinal tract, including ileostomy and colostomy, does not preclude any gainful activity if you are able to maintain adequate nutrition and function of the stoma. However, if you are not able to maintain adequate nutrition, we will evaluate your impairment under 5.08.

F. *How do we evaluate short bowel syndrome (SBS)?*

1. *Short bowel syndrome* (5.07) is a disorder that occurs when ischemic vascular insults (for example, volvulus), trauma, or IBD complications require surgical resection of more than one-half of the small intestine, resulting in the loss of intestinal absorptive surface and a state of chronic malnutrition. The management of SBS requires long-term parenteral nutrition via an indwelling central venous catheter (central line); the process is often referred to as *hyperalimentation* or *total parenteral nutrition* (TPN). Individuals with SBS can also feed orally, with variable amounts of nutrients being absorbed through their remaining intestine. Over time, some of these individuals can develop additional intestinal absorptive surface, and may ultimately be able to be weaned off their parenteral nutrition.

2. Your impairment will continue to meet 5.07 as long as you remain dependent on daily parenteral nutrition via a central venous catheter for most of your nutritional requirements. Long-term complications of SBS and parenteral nutrition include central line infections (with or without septicemia), thrombosis, hepatotoxicity, gallstones, and loss of venous access sites. Intestinal transplantation is the only definitive treatment for individuals with SBS who remain chronically dependent on parenteral nutrition.

3. To document SBS, we need a copy of the operative report of intestinal resection, the summary of the hospitalization(s) including: Details of the surgical findings, medically appropriate postoperative imaging studies that reflect the amount of your residual small intestine, or if we cannot get one of these reports, other medical reports that include details of the surgical findings. We also need medical documentation that you are dependent on daily parenteral nutrition to provide most of your nutritional requirements.

G. *How do we evaluate weight loss due to any digestive disorder?*

1. In addition to the impairments specifically mentioned in these listings, other digestive disorders, such as esophageal stricture, pancreatic insufficiency, and malabsorption, may result in significant weight loss. We evaluate weight loss due to any digestive disorder under 5.08 by using the Body Mass Index (BMI). We also provide a criterion in 5.06B for lesser weight loss resulting from IBD.

2. BMI is the ratio of your weight to the square of your height. Calculation and interpretation of the BMI are independent of gender in adults.

a. We calculate BMI using inches and pounds, meters and kilograms, or centimeters and kilograms. We must have measurements of your weight and height without shoes for these calculations.

b. We calculate BMI using one of the following formulas:

English Formula

$$\text{BMI} = \left(\frac{\text{Weight in Pounds}}{(\text{Height in Inches}) \times (\text{Height in Inches})} \right) \times 703$$

Metric Formula

$$\text{BMI} = \frac{\text{Weight in Kilograms}}{(\text{Height in Meters}) \times (\text{Height in Meters})}$$

Or

$$\text{BMI} = \left(\frac{\text{Weight in Kilograms}}{(\text{Height in Centimeters}) \times (\text{Height in Centimeters})} \right) \times 10{,}000$$

H. *What do we mean by the phrase ''consider under a disability for 1 year''?* We use the phrase ''consider under a disability for 1 year'' following a specific event in 5.02, 5.05A, and 5.09 to explain how long your impairment can meet the requirements of those particular listings. This phrase does not refer to the date on which your disability began, only to the date on which we must re-evaluate whether your impairment continues to meet a listing or is otherwise disabling. For example, if you have received a liver transplant, you may have become disabled before the transplant because of chronic liver disease. Therefore, we do not restrict our determination of the onset of disability to the date of the specified event. We will establish an onset date earlier than the date of the specified event if the evidence in your case record supports such a finding.

I. *How do we evaluate impairments that do not meet one of the digestive disorder listings?*

1. These listings are only examples of common digestive disorders that we consider severe enough to prevent you from doing any gainful activity. If your impairment(s) does not meet the criteria of any of these listings, we must also consider whether you have an impairment(s) that satisfies the criteria of a listing in another body system. For example, if you have hepatitis B or C and you are depressed, we will evaluate your impairment under 12.04.

2. If you have a severe medically determinable impairment(s) that does not meet a listing, we will determine whether your impairment(s) medically equals a listing. (See §§404.1526 and 416.926.) If your impairment(s) does not meet or medically equal a listing, you may or may not have the residual functional capacity to engage in substantial gainful activity. In this situation, we will proceed to the fourth, and if necessary, the fifth steps of the sequential evaluation process in §§404.1520 and 416.920. When we decide whether you continue to be disabled, we use the rules in §§404.1594, 416.994, and 416.994a as appropriate.

5.01 *Category of Impairments, Digestive System*

5.02 *Gastrointestinal hemorrhaging from any cause, requiring blood transfusion* (with or without hospitalization) of at least 2 units of blood per transfusion, and occurring at least three times during a consecutive 6-month period. The transfusions must be at least 30 days apart within the 6-month period. Consider under a disability for 1 year following the last documented transfusion; thereafter, evaluate the residual impairment(s).

5.03–5.04 [Reserved]

5.05 *Chronic liver disease*, with:

A. Hemorrhaging from esophageal, gastric, or ectopic varices or from portal hypertensive gastropathy, demonstrated by endoscopy, x-ray, or other appropriate medically acceptable imaging, resulting in hemodynamic instability as defined in 5.00D5, and requiring hospitalization for transfusion of at least 2 units of blood. Consider under a disability for 1 year following the last documented transfusion; thereafter, evaluate the residual impairment(s).

OR

B. Ascites or hydrothorax not attributable to other causes, despite continuing treatment as prescribed, present on at least two evaluations at least 60 days apart within a consecutive 6-month period. Each evaluation must be documented by:

1. Paracentesis or thoracentesis; or

2. Appropriate medically acceptable imaging or physical examination and one of the following:

a. Serum albumin of 3.0 g/dL or less; or

b. International Normalized Ratio (INR) of at least 1.5.

OR

C. Spontaneous bacterial peritonitis with peritoneal fluid containing an absolute neutrophil count of at least 250 cells/mm^3.

OR

D. Hepatorenal syndrome as described in 5.00D8, with one of the following:

1. Serum creatinine elevation of at least 2 mg/dL; or

2. Oliguria with 24-hour urine output less than 500 mL; or

3. Sodium retention with urine sodium less than 10 mEq per liter.

OR

E. Hepatopulmonary syndrome as described in 5.00D9, with:

1. Arterial oxygenation (P_aO_2) on room air of:

a. 60 mm Hg or less, at test sites less than 3000 feet above sea level, or

b. 55 mm Hg or less, at test sites from 3000 to 6000 feet, or

c. 50 mm Hg or less, at test sites above 6000 feet; or

2. Documentation of intrapulmonary arteriovenous shunting by contrast-enhanced echocardiography or macroaggregated albumin lung perfusion scan.

OR

F. Hepatic encephalopathy as described in 5.00D10, with 1 and either 2 or 3:

1. Documentation of abnormal behavior, cognitive dysfunction, changes in mental status, or altered state of consciousness (for example, confusion, delirium, stupor, or coma), present on at least two evaluations at least 60 days apart within a consecutive 6-month period; and

2. History of transjugular intrahepatic portosystemic shunt (TIPS) or any surgical portosystemic shunt: or

3. One of the following occurring on at least two evaluations at least 60 days apart within the same consecutive 6-month period as in F1:

a. Asterixis or other fluctuating physical neurological abnormalities; or

b. Electroencephalogram (EEG) demonstrating triphasic slow wave activity; or

c. Serum albumin of 3.0 g/dL or less; or

d. International Normalized Ratio (INR) of 1.5 or greater.

OR

G. End stage liver disease with SSA CLD scores of 22 or greater calculated as described in 5.00D11. Consider under a disability from at least the date of the first score.

5.06 *Inflammatory bowel disease (IBD)* documented by endoscopy, biopsy, appropriate medically acceptable imaging, or operative findings with:

A. Obstruction of stenotic areas (not adhesions) in the small intestine or colon with proximal dilatation, confirmed by appropriate medically acceptable imaging or in surgery, requiring hospitalization for intestinal decompression or for surgery, and occurring on at least two occasions at least 60 days apart within a consecutive 6-month period;

OR

B. Two of the following despite continuing treatment as prescribed and occurring within the same consecutive 6-month period:

1. Anemia with hemoglobin of less than 10.0 g/dL, present on at least two evaluations at least 60 days apart; or

2. Serum albumin of 3.0 g/dL or less, present on at least two evaluations at least 60 days apart; or

3. Clinically documented tender abdominal mass palpable on physical examination with abdominal pain or cramping that is not completely controlled by prescribed narcotic medication, present on at least two evaluations at least 60 days apart; or

4. Perineal disease with a draining abscess or fistula, with pain that is not completely controlled by prescribed narcotic medication, present on at least two evaluations at least 60 days apart; or

5. Involuntary weight loss of at least 10 percent from baseline, as computed in pounds, kilograms, or BMI, present on at least two evaluations at least 60 days apart; or

6. Need for supplemental daily enteral nutrition via a gastrostomy or daily parenteral nutrition via a central venous catheter.

5.07 *Short bowel syndrome (SBS),* due to surgical resection of more than one-half of the small intestine, with dependence on daily parenteral nutrition via a central venous catheter (see 5.00F).

5.08 *Weight loss due to any digestive disorder* despite continuing treatment as prescribed, with BMI of less than 17.50 calculated on at least two evaluations at least 60 days apart within a consecutive 6-month period.

5.09 *Liver transplantation.* Consider under a disability for 1 year following the date of transplantation; thereafter, evaluate the residual impairment(s) (see 5.00D12 and 5.00H).

6.00 GENITOURINARY DISORDERS

A. Which disorders do we evaluate under these listings?

We evaluate genitourinary disorders resulting in chronic kidney disease (CKD). Examples of such disorders include chronic glomerulonephritis, hypertensive nephropathy, diabetic nephropathy, chronic obstructive uropathy, and hereditary nephropathies. We also evaluate nephrotic syndrome due to glomerular dysfunction under these listings.

B. What evidence do we need?

1. We need evidence that documents the signs, symptoms, and laboratory findings of your CKD. This evidence should include reports of clinical examinations, treatment records, and documentation of your response to treatment. Laboratory findings, such as serum creatinine or serum albumin levels, may document your kidney function. We generally need evidence covering a period of at least 90 days unless we can make a fully favorable determination or decision without it.

2. *Estimated glomerular filtration rate (eGFR).* The eGFR is an estimate of the filtering capacity of the kidneys that takes into account serum creatinine concentration and other variables, such as your age, gender, and body size. If your medical evidence includes eGFR findings, we will consider them when we evaluate your CKD under 6.05.

3. *Kidney or bone biopsy.* If you have had a kidney or bone biopsy, we need a copy of the pathology report. When we cannot get a copy of the pathology report, we will accept a statement from an acceptable medical source verifying that a biopsy was performed and describing the results.

C. What other factors do we consider when we evaluate your genitourinary disorder?

1. *Chronic hemodialysis or peritoneal dialysis.*

a. Dialysis is a treatment for CKD that uses artificial means to remove toxic metabolic byproducts from the blood. Hemodialysis uses an artificial kidney machine to clean waste products from the blood; peritoneal dialysis uses a dialyzing solution that is introduced into and removed from the abdomen (peritoneal cavity) either continuously or intermittently. Under 6.03, your ongoing dialysis must have lasted or be expected to last for a continuous period of at least 12 months. To satisfy the requirements in 6.03, we will accept a report from an acceptable medical source that describes your CKD and your current dialysis, and indicates that your dialysis will be ongoing.

b. If you are undergoing chronic hemodialysis or peritoneal dialysis, your CKD may meet our definition of disability before you started dialysis. We will determine the onset of your disability based on the facts in your case record.

2. *Kidney transplant.*

a. If you receive a kidney transplant, we will consider you to be disabled under 6.04 for 1 year from the date of transplant. After that, we will evaluate your residual impairment(s) by considering your post-transplant function, any rejection episodes you have had, complications in other body systems, and any adverse effects related to ongoing treatment.

b. If you received a kidney transplant, your CKD may meet our definition of disability before you received the transplant. We will determine the onset of your disability based on the facts in your case record.

3. *Renal osteodystrophy.* This condition is the bone degeneration resulting from chronic kidney disease-mineral and bone disorder (CKD–MBD). CKD–MBD occurs when the kidneys are unable to maintain the necessary levels of minerals, hormones, and vitamins required for bone structure and function. Under 6.05B1, ''severe bone pain'' means frequent or intractable (resistant to treatment) bone pain that interferes with physical activity or mental functioning.

4. *Peripheral neuropathy.* This disorder results when the kidneys do not adequately filter toxic substances from the blood. These toxins can adversely affect nerve tissue. The resulting neuropathy may affect peripheral motor or sensory nerves, or both, causing pain, numbness, tingling, and muscle weakness in various parts of the body. Under 6.05B2, the peripheral neuropathy must be a severe impairment. (See §§404.1520(c), 404.1521, 416.920(c), and 416.921 of this chapter.) It must also have lasted or be expected to last for a continuous period of at least 12 months.

5. *Fluid overload syndrome.* This condition occurs when excess sodium and water retention in the body due to CKD results in vascular congestion. Under 6.05B3, we need a description of a physical examination that documents signs and symptoms of vascular congestion, such as congestive heart failure, pleural effusion (excess fluid in the chest), ascites (excess fluid in the abdomen), hypertension, fatigue, shortness of breath, or peripheral edema.

6. *Anasarca* (generalized massive edema or swelling). Under 6.05B3 and 6.06B, we need a description of the extent of edema, including pretibial (in front of the tibia), periorbital (around the eyes), or presacral (in front of the sacrum) edema. We also need a description of any ascites, pleural effusion, or pericardial effusion.

7. *Anorexia (diminished appetite) with weight loss.* Anorexia is a frequent sign of CKD and can result in weight loss. We will use body mass index (BMI) to determine the severity of your weight loss under 6.05B4. (BMI is the

ratio of your measured weight to the square of your measured height.) The formula for calculating BMI is in section 5.00G.

8. *Complications of CKD*. The hospitalizations in 6.09 may be for different complications of CKD. Examples of complications from CKD that may result in hospitalization include stroke, congestive heart failure, hypertensive crisis, or acute kidney failure requiring a short course of hemodialysis. If the CKD complication occurs during a hospitalization that was initially for a co-occurring condition, we will evaluate it under our rules for determining medical equivalence. (See §§ 404.1526 and 416.926 of this chapter.) We will evaluate co-occurring conditions, including those that result in hospitalizations, under the listings for the affected body system or under our rules for medical equivalence.

D. How do we evaluate disorders that do not meet one of the genitourinary listings?

1. The listed disorders are only examples of common genitourinary disorders that we consider severe enough to prevent you from doing any gainful activity. If your impairment(s) does not meet the criteria of any of these listings, we must also consider whether you have an impairment(s) that satisfies the criteria of a listing in another body system.

2. If you have a severe medically determinable impairment(s) that does not meet a listing, we will determine whether your impairment(s) medically equals a listing. (See §§ 404.1526 and 416.926 of this chapter.) Genitourinary disorders may be associated with disorders in other body systems, and we consider the combined effects of multiple impairments when we determine whether they medically equal a listing. If your impairment(s) does not meet or medically equal the criteria of a listing, you may or may not have the residual functional capacity to engage in substantial gainful activity. We proceed to the fourth and, if necessary, the fifth steps of the sequential evaluation process in §§ 404.1520 and 416.920 of this chapter. We use the rules in §§ 404.1594 and 416.994 of this chapter, as appropriate, when we decide whether you continue to be disabled.

6.01 Category of Impairments, Genitourinary Disorders

6.03 *Chronic kidney disease*, with chronic hemodialysis or peritoneal dialysis (see 6.00C1).

6.04 *Chronic kidney disease*, with kidney transplant. Consider under a disability for 1 year following the transplant; thereafter, evaluate the residual impairment (see 6.00C2).

6.05 *Chronic kidney disease*, with impairment of kidney function, with A and B:

A. Reduced glomerular filtration evidenced by one of the following laboratory findings documented on at least two occasions at least 90 days apart during a consecutive 12-month period:

1. Serum creatinine of 4 mg/dL or greater; or

2. Creatinine clearance of 20 ml/min. or less; or

3. Estimated glomerular filtration rate (eGFR) of 20 ml/min/1.73m^2 or less.

AND

B. One of the following:

1. Renal osteodystrophy (see 6.00C3) with severe bone pain and imaging studies documenting bone abnormalities, such as osteitis fibrosa, osteomalacia, or pathologic fractures; or

2. Peripheral neuropathy (see 6.00C4); or

3. Fluid overload syndrome (see 6.00C5) documented by one of the following:

a. Diastolic hypertension greater than or equal to diastolic blood pressure of 110 mm Hg despite at least 90 consecutive days of prescribed therapy, documented by at least two measurements of diastolic blood pressure at least 90 days apart during a consecutive 12-month period; or

b. Signs of vascular congestion or anasarca (see 6.00C6) despite at least 90 consecutive days of prescribed therapy, documented on at least two occasions at least 90 days apart during a consecutive 12-month period; or

4. Anorexia with weight loss (see 6.00C7) determined by body mass index (BMI) of 18.0 or less, calculated on at least two occasions at least 90 days apart during a consecutive 12-month period.

6.06 *Nephrotic syndrome*, with A and B:

A. Laboratory findings as described in 1 or 2, documented on at least two occasions at least 90 days apart during a consecutive 12-month period:

1. Proteinuria of 10.0 g or greater per 24 hours; or

2. Serum albumin of 3.0 g/dL or less, and

a. Proteinuria of 3.5 g or greater per 24 hours; or

b. Urine total-protein-to-creatinine ratio of 3.5 or greater.

AND

B. Anasarca (see 6.00C6) persisting for at least 90 days despite prescribed treatment.

6.09 *Complications of chronic kidney disease* (see 6.00C8) requiring at least three hospitalizations within a consecutive 12-month period and occurring at least 30 days apart. Each hospitalization must last at least 48 hours, including hours in a hospital emergency department immediately before the hospitalization.

7.00 HEMATOLOGICAL DISORDERS

A. *Impairment caused by anemia* should be evaluated according to the ability of the individual to adjust to the reduced oxygen carrying capacity of the blood. A gradual reduction in red cell mass, even to very low values, is often well tolerated in individuals with a healthy cardiovascular system.

B. *Chronicity is indicated by* persistence of the condition for at least 3 months. The laboratory findings cited must reflect the values reported on more than one examination over that 3-month period. Medically acceptable imaging includes, but is not limited to, x-ray imaging, computerized axial tomography (CAT scan) or magnetic resonance imaging (MRI), with or without contrast material, myelography, and radionuclear bone scans. ''Appropriate'' means that the technique used is the proper one to support the evaluation and diagnosis of the impairment.

C. *Sickle cell disease* refers to a chronic hemolytic anemia associated with sickle cell hemoglobin, either homozygous or in combination with thalassemia or with another abnormal hemoglobin (such as C or F).

Appropriate hematologic evidence for sickle cell disease, such as hemoglobin electrophoresis, must be included. Vasoocclusive or aplastic episodes should be documented by description of severity, frequency, and duration.

Major visceral episodes include meningitis, osteomyelitis, pulmonary infections or infarctions, cerebrovascular accidents, congestive heart failure, genito-urinary involvement, etc.

D. *Coagulation defects*. Chronic inherited coagulation disorders must be documented by appropriate laboratory evidence. Prophylactic therapy such as with antihemophilic globulin (AHG) concentrate does not in itself imply severity.

7.01 Category of Impairments, Hemic and Lymphatic System

7.02 *Chronic anemia (hematocrit persisting at 30 percent or less due to any cause)*. With:

A. Requirement of one or more blood transfusions on an average of at least once every 2 months; or

B. Evaluation of the resulting impairment under criteria for the affected body system.

7.05 *Sickle cell disease, or one of its variants*. With:

A. Documented painful (thrombotic) crises occurring at least three times during the 5 months prior to adjudication; or

B. Requiring extended hospitalization (beyond emergency care) at least three times during the 12 months prior to adjudication; or

C. Chronic, severe anemia with persistence of hematocrit of 26 percent or less; or

D. Evaluate the resulting impairment under the criteria for the affected body system.

7.06 *Chronic thrombocytopenia (due to any cause)* with platelet counts repeatedly below 40,000/cubic millimeter. With:

A. At least one spontaneous hemorrhage, requiring transfusion, within 5 months prior to adjudication; or

B. Intracranial bleeding within 12 months prior to adjudication.

7.07 *Hereditary telangiectasia* with hemorrhage requiring transfusion at least three times during the 5 months prior to adjudication.

7.08 *Coagulation defects (hemophilia or a similar disorder)* with spontaneous hemorrhage requiring transfusion at least three times during the 5 months prior to adjudication.

7.09 *Polycythemia vera (with erythrocytosis, splenomegaly, and leukocytosis or thrombocytosis)*. Evaluate the resulting impairment under the criteria for the affected body system.

7.10 *Myelofibrosis (myeloproliferative syndrome)*. With:

A. Chronic anemia. Evaluate according to the criteria of §7.02; or

B. Documented recurrent systemic bacterial infections occurring at least 3 times during the 5 months prior to adjudication; or

C. Intractable bone pain with radiologic evidence of osteosclerosis.

7.11–7.14 [Reserved]

7.15 *Chronic granulocytopenia (due to any cause)*. With both A and B:

A. Absolute neutrophil counts repeatedly below 1,000 cells/cubic millimeter; and

B. Documented recurrent systemic bacterial infections occurring at least 3 times during the 5 months prior to adjudication.

7.16 [Reserved]

7.17 *Aplastic anemias* with bone marrow or stem cell transplantation. Consider under a disability for 12 months following transplantation; thereafter, evaluate according to the primary characteristics of the residual impairment.

8.00 SKIN DISORDERS

A. *What skin disorders do we evaluate with these listings?* We use these listings to evaluate skin disorders that may result from hereditary, congenital, or acquired pathological processes. The kinds of impairments covered by these listings are: Ichthyosis, bullous diseases, chronic infections of the skin or mucous membranes, dermatitis, hidradenitis suppurativa, genetic photosensitivity disorders, and burns.

B. *What documentation do we need?* When we evaluate the existence and severity of your skin disorder, we generally need information about the onset, duration, frequency of flareups, and prognosis of your skin disorder; the location, size, and appearance of lesions; and, when applicable, history of exposure to toxins, allergens, or irritants, familial incidence, seasonal variation, stress factors, and

your ability to function outside of a highly protective environment. To confirm the diagnosis, we may need laboratory findings (for example, results of a biopsy obtained independently of Social Security disability evaluation or blood tests) or evidence from other medically acceptable methods consistent with the prevailing state of medical knowledge and clinical practice.

C. *How do we assess the severity of your skin disorder(s)?* We generally base our assessment of severity on the extent of your skin lesions, the frequency of flareups of your skin lesions, how your symptoms (including pain) limit you, the extent of your treatment, and how your treatment affects you.

1. *Extensive skin lesions.* Extensive skin lesions are those that involve multiple body sites or critical body areas, and result in a very serious limitation. Examples of extensive skin lesions that result in a very serious limitation include but are not limited to:

a. Skin lesions that interfere with the motion of your joints and that very seriously limit your use of more than one extremity; that is, two upper extremities, two lower extremities, or one upper and one lower extremity.

b. Skin lesions on the palms of both hands that very seriously limit your ability to do fine and gross motor movements.

c. Skin lesions on the soles of both feet, the perineum, or both inguinal areas that very seriously limit your ability to ambulate.

2. *Frequency of flareups.* If you have skin lesions, but they do not meet the requirements of any of the listings in this body system, you may still have an impairment that prevents you from doing any gainful activity when we consider your condition over time, especially if your flareups result in extensive skin lesions, as defined in C1 of this section. Therefore, if you have frequent flareups, we may find that your impairment(s) is medically equal to one of these listings even though you have some periods during which your condition is in remission. We will consider how frequent and serious your flareups are, how quickly they resolve, and how you function between flareups to determine whether you have been unable to do any gainful activity for a continuous period of at least 12 months or can be expected to be unable to do any gainful activity for a continuous period of at least 12 months. We will also consider the frequency of your flareups when we determine whether you have a severe impairment and when we need to assess your residual functional capacity.

3. *Symptoms (including pain).* Symptoms (including pain) may be important factors contributing to the severity of your skin disorder(s). We assess the impact of symptoms as explained in §§ 404.1528, 404.1529, 416.928, and 416.929 of this chapter.

4. *Treatment.* We assess the effects of medication, therapy, surgery, and any other form of treatment you receive when we determine the severity and duration of your impairment(s). Skin disorders frequently respond to treatment; however, response to treatment can vary widely, with some impairments becoming resistant to treatment. Some treatments can have side effects that can in themselves result in limitations.

a. We assess the effects of continuing treatment as prescribed by determining if there is improvement in the symptoms, signs, and laboratory findings of your disorder, and if you experience side effects that result in functional limitations. To assess the effects of your treatment, we may need information about:

i. The treatment you have been prescribed (for example, the type, dosage, method, and frequency of administration of medication or therapy);

ii. Your response to the treatment;

iii. Any adverse effects of the treatment; and

iv. The expected duration of the treatment.

b. Because treatment itself or the effects of treatment may be temporary, in most cases sufficient time must elapse to allow us to evaluate the impact and expected duration of treatment and its side effects. Except under 8.07 and 8.08, you must follow continuing treatment as prescribed for at least 3 months before your impairment can be determined to meet the requirements of a skin disorder listing. (See 8.00H if you are not undergoing treatment or did not have treatment for 3 months.) We consider your specific response to treatment when we evaluate the overall severity of your impairment.

D. *How do we assess impairments that may affect the skin and other body systems?* When your impairment affects your skin and has effects in other body systems, we first evaluate the predominant feature of your impairment under the appropriate body system. Examples include, but are not limited to the following.

1. *Tuberous sclerosis* primarily affects the brain. The predominant features are seizures, which we evaluate under the neurological listings in 11.00, and developmental delays or other mental disorders, which we evaluate under the mental disorders listings in 12.00.

2. *Malignant tumors of the skin* (for example, malignant melanomas) are cancers, or neoplastic diseases, which we evaluate under the listings in 13.00.

3. *Autoimmune disorders and other immune system disorders* (for example, systemic lupus erythematosus (SLE), scleroderma, human immunodeficiency virus (HIV) infection, and Sjögren's syndrome) often involve more than one body system. We first evaluate these disorders under the immune system disorders listings in 14.00. We evaluate SLE under

14.02, scleroderma under 14.04, HIV infection under 14.08, and Sjögren's syndrome under 14.10.

4. *Disfigurement or deformity* resulting from skin lesions may result in loss of sight, hearing, speech, and the ability to chew (mastication). We evaluate these impairments and their effects under the special senses and speech listings in 2.00 and the digestive system listings in 5.00. Facial disfigurement or other physical deformities may also have effects we evaluate under the mental disorders listings in 12.00, such as when they affect mood or social functioning.

E. *How do we evaluate genetic photosensitivity disorders?*

1. *Xeroderma pigmentosum (XP).* When you have XP, your impairment meets the requirements of 8.07A if you have clinical and laboratory findings showing that you have the disorder. (See 8.00E3.) People who have XP have a lifelong hypersensitivity to all forms of ultraviolet light and generally lead extremely restricted lives in highly protective environments in order to prevent skin cancers from developing. Some people with XP also experience problems with their eyes, neurological problems, mental disorders, and problems in other body systems.

2. *Other genetic photosensitivity disorders.* Other genetic photosensitivity disorders may vary in their effects on different people, and may not result in an inability to engage in any gainful activity for a continuous period of at least 12 months. Therefore, if you have a genetic photosensitivity disorder other than XP (established by clinical and laboratory findings as described in 8.00E3), you must show that you have either extensive skin lesions or an inability to function outside of a highly protective environment to meet the requirements of 8.07B. You must also show that your impairment meets the duration requirement. By *inability to function outside of a highly protective environment* we mean that you must avoid exposure to ultraviolet light (including sunlight passing through windows and light from unshielded fluorescent bulbs), wear protective clothing and eyeglasses, and use opaque broad-spectrum sunscreens in order to avoid skin cancer or other serious effects. Some genetic photosensitivity disorders can have very serious effects in other body systems, especially special senses and speech (2.00), neurological (11.00), mental (12.00), and neoplastic (13.00). We will evaluate the predominant feature of your impairment under the appropriate body system, as explained in 8.00D.

3. *Clinical and laboratory findings.*

a. *General.* We need documentation from an acceptable medical source, as defined in §§404.1513(a) and 416.913(a), to establish that you have a medically determinable impairment. In general, we must have evidence of appropriate laboratory testing showing that you have XP or another genetic photosensitivity disorder. We will find that you have XP or another genetic photosensitivity disorder based on a report from an acceptable medical source indicating that you have the impairment, supported by definitive genetic laboratory studies documenting appropriate chromosomal changes, including abnormal DNA repair or another DNA or genetic abnormality specific to your type of photosensitivity disorder.

b. *What we will accept as medical evidence instead of the actual laboratory report.* When we do not have the actual laboratory report, we need evidence from an acceptable medical source that includes appropriate clinical findings for your impairment and that is persuasive that a positive diagnosis has been confirmed by appropriate laboratory testing at some time prior to our evaluation. To be persuasive, the report must state that the appropriate definitive genetic laboratory study was conducted and that the results confirmed the diagnosis. The report must be consistent with other evidence in your case record.

F. *How do we evaluate burns?* Electrical, chemical, or thermal burns frequently affect other body systems; for example, musculoskeletal, special senses and speech, respiratory, cardiovascular, renal, neurological, or mental. Consequently, we evaluate burns the way we evaluate other disorders that can affect the skin and other body systems, using the listing for the predominant feature of your impairment. For example, if your soft tissue injuries are under continuing surgical management (as defined in 1.00M), we will evaluate your impairment under 1.08. However, if your burns do not meet the requirements of 1.08 and you have extensive skin lesions that result in a very serious limitation (as defined in 8.00C1) that has lasted or can be expected to last for a continuous period of at least 12 months, we will evaluate them under 8.08.

G. *How do we determine if your skin disorder(s) will continue at a disabling level of severity in order to meet the duration requirement?* For all of these skin disorder listings except 8.07 and 8.08, we will find that your impairment meets the duration requirement if your skin disorder results in extensive skin lesions that persist for at least 3 months despite continuing treatment as prescribed. By *persist,* we mean that the longitudinal clinical record shows that, with few exceptions, your lesions have been at the level of severity specified in the listing. For 8.07A, we will presume that you meet the duration requirement. For 8.07B and 8.08, we will consider all of the relevant medical and other information in your case record to determine whether your skin disorder meets the duration requirement.

H. *How do we assess your skin disorder(s) if your impairment does not meet the requirements of one of these listings?*

1. These listings are only examples of common skin disorders that we consider severe enough to prevent you from engaging in any gainful activity. For most of these listings, if you do not have continuing treatment as prescribed, if your treatment has not lasted for at least 3 months, or if you do not have extensive skin lesions that have persisted for at least 3 months, your impairment cannot meet the requirements of these skin disorder listings. (This provision does not apply to 8.07 and 8.08.) However, we may still find that you are disabled because your impairment(s) meets the requirements of a listing in another body system or medically equals the severity of a listing. (See §§404.1526 and 416.926 of this chapter.) We may also find you disabled at the last step of the sequential evaluation process.

2. If you have not received ongoing treatment or do not have an ongoing relationship with the medical community despite the existence of a severe impairment(s), or if your skin lesions have not persisted for at least 3 months but you are undergoing continuing treatment as prescribed, you may still have an impairment(s) that meets a listing in another body system or that medically equals a listing. If you do not have an impairment(s) that meets or medically equals a listing, we will assess your residual functional capacity and proceed to the fourth and, if necessary, the fifth step of the sequential evaluation process in §§404.1520 and 416.920 of this chapter. When we decide whether you continue to be disabled, we use the rules in §§404.1594 and 416.994 of this chapter.

8.01 Category of Impairments, Skin Disorders

8.02 *Ichthyosis,* with extensive skin lesions that persist for at least 3 months despite continuing treatment as prescribed.

8.03 *Bullous disease* (for example, pemphigus, erythema multiforme bullosum, epidermolysis bullosa, bullous pemphigoid, dermatitis herpetiformis), with extensive skin lesions that persist for at least 3 months despite continuing treatment as prescribed.

8.04 *Chronic infections of the skin or mucous membranes,* with extensive fungating or extensive ulcerating skin lesions that persist for at least 3 months despite continuing treatment as prescribed.

8.05 *Dermatitis* (for example, psoriasis, dyshidrosis, atopic dermatitis, exfoliative dermatitis, allergic contact dermatitis), with extensive skin lesions that persist for at least 3 months despite continuing treatment as prescribed.

8.06 *Hidradenitis suppurativa,* with extensive skin lesions involving both axillae, both inguinal areas or the perineum that persist for at least 3 months despite continuing treatment as prescribed.

8.07 *Genetic photosensitivity disorders*, established as described in 8.00E.

A. Xeroderma pigmentosum. Consider the individual disabled from birth.

B. Other genetic photosensitivity disorders, with:

1. Extensive skin lesions that have lasted or can be expected to last for a continuous period of at least 12 months, or

2. Inability to function outside of a highly protective environment for a continuous period of at least 12 months (see 8.00E2).

8.08 *Burns,* with extensive skin lesions that have lasted or can be expected to last for a continuous period of at least 12 months (see 8.00F).

9.00 ENDOCRINE DISORDERS

A. *What is an endocrine disorder?*

An endocrine disorder is a medical condition that causes a hormonal imbalance. When an endocrine gland functions abnormally, producing either too much of a specific hormone (hyperfunction) or too little (hypofunction), the hormonal imbalance can cause various complications in the body. The major glands of the endocrine system are the pituitary, thyroid, parathyroid, adrenal, and pancreas.

B. *How do we evaluate the effects of endocrine disorders?* We evaluate impairments that result from endocrine disorders under the listings for other body systems. For example:

1. *Pituitary gland disorders* can disrupt hormone production and normal functioning in other endocrine glands and in many body systems. The effects of pituitary gland disorders vary depending on which hormones are involved. For example, when pituitary hypofunction affects water and electrolyte balance in the kidney and leads to diabetes insipidus, we evaluate the effects of recurrent dehydration under 6.00.

2. *Thyroid gland disorders* affect the sympathetic nervous system and normal metabolism. We evaluate thyroid-related changes in blood pressure and heart rate that cause arrhythmias or other cardiac dysfunction under 4.00; thyroid-related weight loss under 5.00; hypertensive cerebrovascular accidents (strokes) under 11.00; and cognitive limitations, mood disorders, and anxiety under 12.00.

3. *Parathyroid gland disorders* affect calcium levels in bone, blood, nerves, muscle, and other body tissues. We evaluate parathyroid-related osteoporosis and fractures under 1.00; abnormally elevated calcium levels in the blood (hypercalcemia) that lead to cataracts under 2.00; kidney failure under 6.00; and recurrent abnormally low blood calcium levels (hypocalcemia) that lead to increased excitability of nerves and muscles, such as tetany and muscle spasms, under 11.00.

4. *Adrenal gland disorders* affect bone calcium levels, blood pressure, metabolism, and

mental status. We evaluate adrenal-related osteoporosis with fractures that compromises the ability to walk or to use the upper extremities under 1.00; adrenal-related hypertension that worsens heart failure or causes recurrent arrhythmias under 4.00; adrenal-related weight loss under 5.00; and mood disorders under 12.00.

5. *Diabetes mellitus and other pancreatic gland disorders* disrupt the production of several hormones, including insulin, that regulate metabolism and digestion. Insulin is essential to the absorption of glucose from the bloodstream into body cells for conversion into cellular energy. The most common pancreatic gland disorder is *diabetes mellitus* (DM). There are two major types of DM: type 1 and type 2. Both type 1 and type 2 DM are chronic disorders that can have serious disabling complications that meet the duration requirement. Type 1 DM—previously known as ''juvenile diabetes'' or ''insulin-dependent diabetes mellitus'' (IDDM)—is an absolute deficiency of insulin production that commonly begins in childhood and continues throughout adulthood. Treatment of type 1 DM always requires lifelong daily insulin. With type 2 DM—previously known as ''adult-onset diabetes mellitus'' or ''non-insulin-dependent diabetes mellitus'' (NIDDM)—the body's cells resist the effects of insulin, impairing glucose absorption and metabolism. Treatment of type 2 DM generally requires lifestyle changes, such as increased exercise and dietary modification, and sometimes insulin in addition to other medications. While both type 1 and type 2 DM are usually controlled, some persons do not achieve good control for a variety of reasons including, but not limited to, hypoglycemia unawareness, other disorders that can affect blood glucose levels, inability to manage DM due to a mental disorder, or inadequate treatment.

a. *Hyperglycemia*. Both types of DM cause hyperglycemia, which is an abnormally high level of blood glucose that may produce acute and long-term complications. Acute complications of hyperglycemia include diabetic ketoacidosis. Long-term complications of chronic hyperglycemia include many conditions affecting various body systems.

(i) *Diabetic ketoacidosis (DKA)*. DKA is an acute, potentially life-threatening complication of DM in which the chemical balance of the body becomes dangerously hyperglycemic and acidic. It results from a severe insulin deficiency, which can occur due to missed or inadequate daily insulin therapy or in association with an acute illness. It usually requires hospital treatment to correct the acute complications of dehydration, electrolyte imbalance, and insulin deficiency. You may have serious complications resulting from your treatment, which we evaluate under the affected body system. For example, we evaluate cardiac arrhythmias under 4.00, intestinal necrosis under 5.00, and cerebral edema and seizures under 11.00. Recurrent episodes of DKA may result from mood or eating disorders, which we evaluate under 12.00.

(ii) *Chronic hyperglycemia*. Chronic hyperglycemia, which is longstanding abnormally high levels of blood glucose, leads to long-term diabetic complications by disrupting nerve and blood vessel functioning. This disruption can have many different effects in other body systems. For example, we evaluate diabetic peripheral neurovascular disease that leads to gangrene and subsequent amputation of an extremity under 1.00; diabetic retinopathy under 2.00; coronary artery disease and peripheral vascular disease under 4.00; diabetic gastroparesis that results in abnormal gastrointestinal motility under 5.00; diabetic nephropathy under 6.00; poorly healing bacterial and fungal skin infections under 8.00; diabetic peripheral and sensory neuropathies under 11.00; and cognitive impairments, depression, and anxiety under 12.00.

b. *Hypoglycemia*. Persons with DM may experience episodes of hypoglycemia, which is an abnormally low level of blood glucose. Most adults recognize the symptoms of hypoglycemia and reverse them by consuming substances containing glucose; however, some do not take this step because of hypoglycemia unawareness. Severe hypoglycemia can lead to complications, including seizures or loss of consciousness, which we evaluate under 11.00, or altered mental status and cognitive deficits, which we evaluate under 12.00.

C. *How do we evaluate endocrine disorders that do not have effects that meet or medically equal the criteria of any listing in other body systems?* If your impairment(s) does not meet or medically equal a listing in another body system, you may or may not have the residual functional capacity to engage in substantial gainful activity. In this situation, we proceed to the fourth and, if necessary, the fifth steps of the sequential evaluation process in §§ 404.1520 and 416.920. When we decide whether you continue to be disabled, we use the rules in §§ 404.1594, 416.994, and 416.994a.

10.00 Congenital Disorders that Affect Multiple Body Systems

A. *Which disorder do we evaluate under this body system?* Although Down syndrome exists in non-mosaic and mosaic forms, we evaluate only non-mosaic Down syndrome under this body system.

B. *What is non-mosaic Down syndrome?* Non-mosaic Down syndrome is a genetic disorder. Most people with non-mosaic Down syndrome have three copies of chromosome 21 in all of their cells (chromosome 21 trisomy); some have an extra copy of chromosome 21 attached to a different chromosome in all of their cells (chromosome 21 translocation).

Virtually all people with non-mosaic Down syndrome have characteristic facial or other physical features, delayed physical development, and intellectual disability. People with non-mosaic Down syndrome may also have congenital heart disease, impaired vision, hearing problems, and other disorders. We evaluate non-mosaic Down syndrome under 10.06. If you have non-mosaic Down syndrome documented as described in 10.00C, we consider you disabled from birth.

C. What evidence do we need to document non-mosaic Down syndrome under 10.06?

1. Under 10.06A, we will find you disabled based on laboratory findings.

a. To find that your disorder meets 10.06A, we need a copy of the laboratory report of karyotype analysis, which is the definitive test to establish non-mosaic Down syndrome. We will not purchase karyotype analysis. We will not accept a fluorescence in situ hybridization (FISH) test because it does not distinguish between the mosaic and non-mosaic forms of Down syndrome.

b. If a physician (see §§404.1513(a)(1) and 416.913(a)(1) of this chapter) has not signed the laboratory report of karyotype analysis, the evidence must also include a physician's statement that you have Down syndrome.

c. For purposes of 10.06A, we do not require additional evidence stating that you have the distinctive facial or other physical features of Down syndrome.

2. If we do not have a laboratory report of karyotype analysis showing that you have non-mosaic Down syndrome, we may find you disabled under 10.06B or 10.06C.

a. Under 10.06B, we need a physician's report stating: (i) your karyotype diagnosis or evidence that documents your type of Down syndrome is consistent with prior karyotype analysis (for example, reference to a diagnosis of ''trisomy 21''), and (ii) that you have the distinctive facial or other physical features of Down syndrome. We do not require a detailed description of the facial or other physical features of the disorder. However, we will not find that your disorder meets 10.06B if we have evidence—such as evidence of functioning inconsistent with the diagnosis—that indicates that you do not have non-mosaic Down syndrome.

b. If we do not have evidence of prior karyotype analysis (you did not have testing, or you had testing but we do not have information from a physician about the test results), we will find that your disorder meets 10.06C if we have: (i) a physician's report stating that you have the distinctive facial or other physical features of Down syndrome, and (ii) evidence that your functioning is consistent with a diagnosis of non-mosaic Down syndrome. This evidence may include medical or nonmedical information about your physical and mental abilities, including information about your education, work history, or the results of psychological testing. However, we will not find that your disorder meets 10.06C if we have evidence—such as evidence of functioning inconsistent with the diagnosis—that indicates that you do not have non-mosaic Down syndrome.

D. How do we evaluate mosaic Down syndrome and other congenital disorders that affect multiple body systems?

1. *Mosaic Down syndrome.* Approximately 2 percent of people with Down syndrome have the mosaic form. In mosaic Down syndrome, there are some cells with an extra copy of chromosome 21 and other cells with the normal two copies of chromosome 21. Mosaic Down syndrome can be so slight as to be undetected clinically, but it can also be profound and disabling, affecting various body systems.

2. *Other congenital disorders that affect multiple body systems.* Other congenital disorders, such as congenital anomalies, chromosomal disorders, dysmorphic syndromes, inborn metabolic syndromes, and perinatal infectious diseases, can cause deviation from, or interruption of, the normal function of the body or can interfere with development. Examples of these disorders include both the juvenile and late-onset forms of Tay-Sachs disease, trisomy X syndrome (XXX syndrome), fragile X syndrome, phenylketonuria (PKU), caudal regression syndrome, and fetal alcohol syndrome. For these disorders and other disorders like them, the degree of deviation, interruption, or interference, as well as the resulting functional limitations and their progression, may vary widely from person to person and may affect different body systems.

3. *Evaluating the effects of mosaic Down syndrome or another congenital disorder under the listings.* When the effects of mosaic Down syndrome or another congenital disorder that affects multiple body systems are sufficiently severe we evaluate the disorder under the appropriate affected body system(s), such as musculoskeletal, special senses and speech, neurological, or mental disorders. Otherwise, we evaluate the specific functional limitations that result from the disorder under our other rules described in 10.00E.

E. What if your disorder does not meet a listing?

If you have a severe medically determinable impairment(s) that does not meet a listing, we will consider whether your impairment(s) medically equals a listing. See §§404.1526 and 416.926 of this chapter. If your impairment(s) does not meet or medically equal a listing, you may or may not have the residual functional capacity to engage in substantial gainful activity. We proceed to the fourth, and if necessary, the fifth steps of the sequential evaluation process in

§§ 404.1520 and 416.920 of this chapter. We use the rules in §§ 404.1594 and 416.994 of this chapter, as appropriate, when we decide whether you continue to be disabled.

10.01 CATEGORY OF IMPAIRMENTS, CONGENITAL DISORDERS THAT AFFECT MULTIPLE BODY SYSTEMS

10.06 *Non-mosaic Down syndrome* (chromosome 21 trisomy or chromosome 21 translocation), documented by:

A. A laboratory report of karyotype analysis signed by a physician, or both a laboratory report of karyotype analysis not signed by a physician *and* a statement by a physician that you have Down syndrome (see 10.00C1), or

B. A physician's report stating that you have chromosome 21 trisomy or chromosome 21 translocation consistent with prior karyotype analysis with the distinctive facial or other physical features of Down syndrome (see 10.00C2a), or

C. A physician's report stating that you have Down syndrome with the distinctive facial or other physical features *and* evidence demonstrating that you function at a level consistent with non-mosaic Down syndrome (see 10.00C2b).

11.00 NEUROLOGICAL

A. *Epilepsy*. In epilepsy, regardless of etiology, degree of impairment will be determined according to type, frequency, duration, and sequelae of seizures. At least one detailed description of a typical seizure is required. Such description includes the presence or absence of aura, tongue bites, sphincter control, injuries associated with the attack, and postictal phenomena. The reporting physician should indicate the extent to which description of seizures reflects his own observations and the source of ancillary information. Testimony of persons other than the claimant is essential for description of type and frequency of seizures if professional observation is not available.

Under 11.02 and 11.03, the criteria can be applied only if the impairment persists despite the fact that the individual is following prescribed antiepileptic treatment. Adherence to prescribed antiepileptic therapy can ordinarily be determined from objective clinical findings in the report of the physician currently providing treatment for epilepsy. Determination of blood levels of phenytoin sodium or other antiepileptic drugs may serve to indicate whether the prescribed medication is being taken. When seizures are occurring at the frequency stated in 11.02 or 11.03, evalution of the severity of the impairment must include consideration of the serum drug levels. Should serum drug levels appear therapeutically inadequate, consideration should be given as to whether this is caused by individual idiosyncrasy in absorption of metabolism of the drug. Blood drug levels should be evaluated in conjunction with all the other evidence to determine the extent of compliance. When the reported blood drug levels are low, therefore, the information obtained from the treating source should include the physician's statement as to why the levels are low and the results of any relevant diagnostic studies concerning the blood levels. Where adequate seizure control is obtained only with unusually large doses, the possibility of impairment resulting from the side effects of this medication must be also assessed. Where documentation shows that use of alcohol or drugs affects adherence to prescribed therapy or may play a part in the precipitation of seizures, this must also be considered in the overall assessment of impairment level.

B. *Brain tumors*. We evaluate malignant brain tumors under the criteria in 13.13. For benign brain tumors, we determine the severity and duration of the impairment on the basis of symptoms, signs, and laboratory findings (11.05).

C. *Persistent disorganization of motor function* in the form of paresis or paralysis, tremor or other involuntary movements, ataxia and sensory disturbances (any or all of which may be due to cerebral, cerebellar, brain stem, spinal cord, or peripheral nerve dysfunction) which occur singly or in various combinations, frequently provides the sole or partial basis for decision in cases of neurological impairment. The assessment of impairment depends on the degree of interference with locomotion and/or interference with the use of fingers, hands, and arms.

D. *In conditions which are episodic in character,* such as multiple sclerosis or myasthenia gravis, consideration should be given to frequency and duration of exacerbations, length of remissions, and permanent residuals.

E. *Multiple sclerosis*. The major criteria for evaluating impairment caused by multiple sclerosis are discussed in listing 11.09. Paragraph A provides criteria for evaluating disorganization of motor function and gives reference to 11.04B (11.04B then refers to 11.00C). Paragraph B provides references to other listings for evaluating visual or mental impairments caused by multiple sclerosis. Paragraph C provides criteria for evaluating the impairment of individuals who do not have muscle weakness or other significant disorganization of motor function at rest, but who do develop muscle weakness on activity as a result of fatigue.

Use of the criteria in 11.09C is dependent upon (1) documenting a diagnosis of multiple sclerosis, (2) obtaining a description of fatigue considered to be characteristic of multiple sclerosis, and (3) obtaining evidence that the system has actually become fatigued. The evaluation of the magnitude of the impairment must consider the degree of

exercise and the severity of the resulting muscle weakness.

The criteria in 11.09C deals with motor abnormalities which occur on activity. If the disorganization of motor function is present at rest, paragraph A must be used, taking into account any further increase in muscle weakness resulting from activity.

Sensory abnormalities may occur, particularly involving central visual acuity. The decrease in visual acuity may occur after brief attempts at activity involving near vision, such as reading. This decrease in visual acuity may not persist when the specific activity is terminated, as with rest, but is predictably reproduced with resumption of the activity. The impairment of central visual acuity in these cases should be evaluated under the criteria in listing 2.02, taking into account the fact that the decrease in visual acuity will wax and wane.

Clarification of the evidence regarding central nervous system dysfunction responsible for the symptoms may require supporting technical evidence of functional impairment such as evoked response tests during exercise.

F. *Traumatic brain injury (TBI).* The guidelines for evaluating impairments caused by cerebral trauma are contained in 11.18. Listing 11.18 states that cerebral trauma is to be evaluated under 11.02, 11.03, 11.04, and 12.02, as applicable.

TBI may result in neurological and mental impairments with a wide variety of posttraumatic symptoms and signs. The rate and extent of recovery can be highly variable and the long-term outcome may be difficult to predict in the first few months post-injury. Generally, the neurological impairment(s) will stabilize more rapidly than any mental impairment(s). Sometimes a mental impairment may appear to improve immediately following TBI and then worsen, or, conversely, it may appear much worse initially but improve after a few months. Therefore, the mental findings immediately following TBI may not reflect the actual severity of your mental impairment(s). The actual severity of a mental impairment may not become apparent until 6 months post-injury.

In some cases, evidence of a profound neurological impairment is sufficient to permit a finding of disability within 3 months post-injury. If a finding of disability within 3 months post-injury is not possible based on any neurological impairment(s), we will defer adjudication of the claim until we obtain evidence of your neurological or mental impairments at least 3 months post-injury. If a finding of disability still is not possible at that time, we will again defer adjudication of the claim until we obtain evidence at least 6 months post-injury. At that time, we will fully evaluate any neurological and mental impairments and adjudicate the claim.

G. *Amyotrophic Lateral Sclerosis (ALS).* 1. Amyotrophic lateral sclerosis (ALS), sometimes called Lou Gehrig's disease, is a progressive, invariably fatal neurological disease that attacks the nerve cells (motor neurons) responsible for controlling voluntary muscles. Eventually, all muscles under voluntary control are affected, and individuals with ALS ultimately lose their ability to move their arms and legs, and their capacity to swallow, speak, and breath. Most people with ALS die from respiratory failure. There is currently no cure for ALS, and most treatments are designed only to relieve symptoms and improve the quality of life.

2. Diagnosis of ALS is based on history, neurological findings consistent with the diagnosis of ALS, and electrophysiological and neuroimaging testing to rule out other impairments that may cause similar signs and symptoms. The diagnosis may also be supported by electrophysiological studies (electromyography or nerve conduction studies), but these tests may be negative or only suggestive of the diagnosis. There is no single test that establishes the existence of ALS.

3. For purposes of 11.10, documentation of the diagnosis must be by generally accepted methods consistent with the prevailing state of medical knowledge and clinical practice. The evidence should include documentation of a clinically appropriate medical history, neurological findings consistent with the diagnosis of ALS, and the results of any electrophysiological and neuroimaging testing.

11.01 Category of Impairments, Neurological

11.02 *Epilepsy—convulsive epilepsy, (grand mal or psychomotor), documented by detailed description of a typical seizure pattern, including all associated phenomena; occurring more frequently than once a month in spite of at least 3 months of prescribed treatment.* With:

A. Daytime episodes (loss of consciousness and convulsive seizures) or

B. Nocturnal episodes manifesting residuals which interfere significantly with activity during the day.

11.03 *Epilepsy—nonconvulsive epilepsy (petit mal, psychomotor, or focal), documented by detailed description of a typical seizure pattern, including all associated phenomena; occurring more frequently than once weekly in spite of at least 3 months of prescribed treatment.* With alteration of awareness or loss of consciousness and transient postictal manifestations of unconventional behavior or significant interference with activity during the day.

11.04 *Central nervous system vascular accident.* With one of the following more than 3 months post-vascular accident:

A. Sensory or motor aphasia resulting in ineffective speech or communication; or

B. Significant and persistent disorganization of motor function in two extremities,

resulting in sustained disturbance of gross and dexterous movements, or gait and station (see 11.00C).

11.05 *Benign brain tumors*. Evaluate under 11.02, 11.03, 11.04, or the criteria of the affected body system.

11.06 *Parkinsonian syndrome* with the following signs: Significant rigidity, brady kinesia, or tremor in two extremities, which, singly or in combination, result in sustained disturbance of gross and dexterous movements, or gait and station.

11.07 *Cerebral palsy*. With:

A. IQ of 70 or less; or

B. Abnormal behavior patterns, such as destructiveness or emotional instability: or

C. Significant interference in communication due to speech, hearing, or visual defect; or

D. Disorganization of motor function as described in 11.04B.

11.08 *Spinal cord or nerve root lesions, due to any cause* with disorganization of motor function as described in 11.04B.

11.09 *Multiple sclerosis*. With:

A. Disorganization of motor function as described in 11.04B; or

B. Visual or mental impairment as described under the criteria in 2.02, 2.03, 2.04, or 12.02; or

C. Significant, reproducible fatigue of motor function with substantial muscle weakness on repetitive activity, demonstrated on physical examination, resulting from neurological dysfunction in areas of the central nervous system known to be pathologically involved by the multiple sclerosis process.

11.10 *Amyotrophic lateral sclerosis* established by clinical and laboratory findings, as described in 11.00G.

11.11 *Anterior poliomyelitis*. With:

A. Persistent difficulty with swallowing or breathing; or

B. Unintelligible speech; or

C. Disorganization of motor function as described in 11.04B.

11.12 *Myasthenia gravis*. With:

A. Significant difficulty with speaking, swallowing, or breathing while on prescribed therapy; or

B. Significant motor weakness of muscles of extremities on repetitive activity against resistance while on prescribed therapy.

11.13 *Muscular dystrophy* with disorganization of motor function as described in 11.04B.

11.14 *Peripheral neuropathies*.

With disorganization of motor function as described in 11.04B, in spite of prescribed treatment.

11.15 [Reserved]

11.16 *Subacute combined cord degeneration (pernicious anemia) with disorganization of motor function as decribed in 11.04B or 11.15B, not significantly improved by prescribed treatment*.

11.17 *Degenerative disease not listed elsewhere, such as Huntington's chorea, Friedreich's ataxia, and spino-cerebellar degeneration*. With:

A. Disorganization of motor function as described in 11.04B; or

B. Chronic brain syndrome. Evaluate under 12.02.

11.18 *Cerebral trauma:*

Evaluate under the provisions of 11.02, 11.03, 11.04 and 12.02, as applicable.

11.19 *Syringomyelia*.

With:

A. Significant bulbar signs; or

B. Disorganization of motor function as described in 11.04B.

12.00 Mental Disorders

A. *Introduction*. The evaluation of disability on the basis of mental disorders requires documentation of a medically determinable impairment(s), consideration of the degree of limitation such impairment(s) may impose on your ability to work, and consideration of whether these limitations have lasted or are expected to last for a continuous period of at least 12 months. The listings for mental disorders are arranged in nine diagnostic categories: Organic mental disorders (12.02); schizophrenic, paranoid and other psychotic disorders (12.03); affective disorders (12.04); intellectual disability (12.05); anxiety-related disorders (12.06); somatoform disorders (12.07); personality disorders (12.08); substance addiction disorders (12.09); and autistic disorder and other pervasive developmental disorders (12.10). Each listing, except 12.05 and 12.09, consists of a statement describing the disorder(s) addressed by the listing, paragraph A criteria (a set of medical findings), and paragraph B criteria (a set of impairment-related functional limitations). There are additional functional criteria (paragraph C criteria) in 12.02, 12.03, 12.04, and 12.06, discussed herein. We will assess the paragraph B criteria before we apply the paragraph C criteria. We will assess the paragraph C criteria only if we find that the paragraph B criteria are not satisfied. We will find that you have a listed impairment if the diagnostic description in the introductory paragraph and the criteria of both paragraphs A and B (or A and C, when appropriate) of the listed impairment are satisfied.

The criteria in paragraph A substantiate medically the presence of a particular mental disorder. Specific symptoms, signs, and laboratory findings in the paragraph A criteria of any of the listings in this section cannot be considered in isolation from the description of the mental disorder contained at the beginning of each listing category. Impairments should be analyzed or reviewed under the mental category(ies) indicated by the medical findings. However, we may also consider mental impairments under physical

body system listings, using the concept of medical equivalence, when the mental disorder results in physical dysfunction. (See, for instance, 12.00D12 regarding the evaluation of anorexia nervosa and other eating disorders.)

The criteria in paragraphs B and C describe impairment-related functional limitations that are incompatible with the ability to do any gainful activity. The functional limitations in paragraphs B and C must be the result of the mental disorder described in the diagnostic description, that is manifested by the medical findings in paragraph A.

The structure of the listing for intellectual disability (12.05) is different from that of the other mental disorders listings. Listing 12.05 contains an introductory paragraph with the diagnostic description for intellectual disability. It also contains four sets of criteria (paragraphs A through D). If your impairment satisfies the diagnostic description in the introductory paragraph and any one of the four sets of criteria, we will find that your impairment meets the listing. Paragraphs A and B contain criteria that describe disorders we consider severe enough to prevent your doing any gainful activity without any additional assessment of functional limitations. For paragraph C, we will assess the degree of functional limitation the additional impairment(s) imposes to determine if it significantly limits your physical or mental ability to do basic work activities, *i.e.*, is a ''severe'' impairment(s), as defined in §§404.1520(c) and 416.920(c). If the additional impairment(s) does not cause limitations that are ''severe'' as defined in §§404.1520(c) and 416.920(c), we will not find that the additional impairment(s) imposes ''an additional and significant work-related limitation of function,'' even if you are unable to do your past work because of the unique features of that work. Paragraph D contains the same functional criteria that are required under paragraph B of the other mental disorders listings.

The structure of the listing for substance addiction disorders, 12.09, is also different from that for the other mental disorder listings. Listing 12.09 is structured as a reference listing; that is, it will only serve to indicate which of the other listed mental or physical impairments must be used to evaluate the behavioral or physical changes resulting from regular use of addictive substances.

The listings are so constructed that an individual with an impairment(s) that meets or is equivalent in severity to the criteria of a listing could not reasonably be expected to do any gainful activity. These listings are only examples of common mental disorders that are considered severe enough to prevent an individual from doing any gainful activity. When you have a medically determinable severe mental impairment that does not satisfy the diagnostic description or the requirements of the paragraph A criteria of the relevant listing, the assessment of the paragraph B and C criteria is critical to a determination of equivalence.

If your impairment(s) does not meet or is not equivalent in severity to the criteria of any listing, you may or may not have the residual functional capacity (RFC) to do substantial gainful activity (SGA). The determination of mental RFC is crucial to the evaluation of your capacity to do SGA when your impairment(s) does not meet or equal the criteria of the listings, but is nevertheless severe.

RFC is a multidimensional description of the work-related abilities you retain in spite of your medical impairments. An assessment of your RFC complements the functional evaluation necessary for paragraphs B and C of the listings by requiring consideration of an expanded list of work-related capacities that may be affected by mental disorders when your impairment(s) is severe but neither meets nor is equivalent in severity to a listed mental disorder.

B. *Need for medical evidence*. We must establish the existence of a medically determinable impairment(s) of the required duration by medical evidence consisting of symptoms, signs, and laboratory findings (including psychological test findings). Symptoms are your own description of your physical or mental impairment(s). Psychiatric signs are medically demonstrable phenomena that indicate specific psychological abnormalities, e.g., abnormalities of behavior, mood, thought, memory, orientation, development, or perception, as described by an appropriate medical source. Symptoms and signs generally cluster together to constitute recognizable mental disorders described in the listings. The symptoms and signs may be intermittent or continuous depending on the nature of the disorder.

C. *Assessment of severity*. We measure severity according to the functional limitations imposed by your medically determinable mental impairment(s). We assess functional limitations using the four criteria in paragraph B of the listings: Activities of daily living; social functioning; concentration, persistence, or pace; and episodes of decompensation. Where we use ''marked'' as a standard for measuring the degree of limitation, it means more than moderate but less than extreme. A marked limitation may arise when several activities or functions are impaired, or even when only one is impaired, as long as the degree of limitation is such as to interfere seriously with your ability to function independently, appropriately, effectively, and on a sustained basis. See §§404.1520a and 416.920a.

1. *Activities of daily living* include adaptive activities such as cleaning, shopping, cooking, taking public transportation, paying

bills, maintaining a residence, caring appropriately for your grooming and hygiene, using telephones and directories, and using a post office. In the context of your overall situation, we assess the quality of these activities by their independence, appropriateness, effectiveness, and sustainability. We will determine the extent to which you are capable of initiating and participating in activities independent of supervision or direction.

We do not define ''marked'' by a specific number of different activities of daily living in which functioning is impaired, but by the nature and overall degree of interference with function. For example, if you do a wide range of activities of daily living, we may still find that you have a marked limitation in your daily activities if you have serious difficulty performing them without direct supervision, or in a suitable manner, or on a consistent, useful, routine basis, or without undue interruptions or distractions.

2. *Social functioning* refers to your capacity to interact independently, appropriately, effectively, and on a sustained basis with other individuals. Social functioning includes the ability to get along with others, such as family members, friends, neighbors, grocery clerks, landlords, or bus drivers. You may demonstrate impaired social functioning by, for example, a history of altercations, evictions, firings, fear of strangers, avoidance of interpersonal relationships, or social isolation. You may exhibit strength in social functioning by such things as your ability to initiate social contacts with others, communicate clearly with others, or interact and actively participate in group activities. We also need to consider cooperative behaviors, consideration for others, awareness of others' feelings, and social maturity. Social functioning in work situations may involve interactions with the public, responding appropriately to persons in authority (e.g., supervisors), or cooperative behaviors involving coworkers.

We do not define ''marked'' by a specific number of different behaviors in which social functioning is impaired, but by the nature and overall degree of interference with function. For example, if you are highly antagonistic, uncooperative, or hostile but are tolerated by local storekeepers, we may nevertheless find that you have a marked limitation in social functioning because that behavior is not acceptable in other social contexts.

3. *Concentration, persistence, or pace* refers to the ability to sustain focused attention and concentration sufficiently long to permit the timely and appropriate completion of tasks commonly found in work settings. Limitations in concentration, persistence, or pace are best observed in work settings, but may also be reflected by limitations in other settings. In addition, major limitations in this area can often be assessed through clinical examination or psychological testing. Wherever possible, however, a mental status examination or psychological test data should be supplemented by other available evidence.

On mental status examinations, concentration is assessed by tasks such as having you subtract serial sevens or serial threes from 100. In psychological tests of intelligence or memory, concentration is assessed through tasks requiring short-term memory or through tasks that must be completed within established time limits.

In work evaluations, concentration, persistence, or pace is assessed by testing your ability to sustain work using appropriate production standards, in either real or simulated work tasks (e.g., filing index cards, locating telephone numbers, or disassembling and reassembling objects). Strengths and weaknesses in areas of concentration and attention can be discussed in terms of your ability to work at a consistent pace for acceptable periods of time and until a task is completed, and your ability to repeat sequences of action to achieve a goal or an objective.

We must exercise great care in reaching conclusions about your ability or inability to complete tasks under the stresses of employment during a normal workday or work week based on a time-limited mental status examination or psychological testing by a clinician, or based on your ability to complete tasks in other settings that are less demanding, highly structured, or more supportive. We must assess your ability to complete tasks by evaluating all the evidence, with an emphasis on how independently, appropriately, and effectively you are able to complete tasks on a sustained basis.

We do not define ''marked'' by a specific number of tasks that you are unable to complete, but by the nature and overall degree of interference with function. You may be able to sustain attention and persist at simple tasks but may still have difficulty with complicated tasks. Deficiencies that are apparent only in performing complex procedures or tasks would not satisfy the intent of this paragraph B criterion. However, if you can complete many simple tasks, we may nevertheless find that you have a marked limitation in concentration, persistence, or pace if you cannot complete these tasks without extra supervision or assistance, or in accordance with quality and accuracy standards, or at a consistent pace without an unreasonable number and length of rest periods, or without undue interruptions or distractions.

4. *Episodes of decompensation* are exacerbations or temporary increases in symptoms or signs accompanied by a loss of adaptive functioning, as manifested by difficulties in performing activities of daily living, maintaining social relationships, or maintaining concentration, persistence, or pace. Episodes

of decompensation may be demonstrated by an exacerbation in symptoms or signs that would ordinarily require increased treatment or a less stressful situation (or a combination of the two). Episodes of decompensation may be inferred from medical records showing significant alteration in medication; or documentation of the need for a more structured psychological support system (e.g., hospitalizations, placement in a halfway house, or a highly structured and directing household); or other relevant information in the record about the existence, severity, and duration of the episode.

The term *repeated episodes of decompensation, each of extended duration* in these listings means three episodes within 1 year, or an average of once every 4 months, each lasting for at least 2 weeks. If you have experienced more frequent episodes of shorter duration or less frequent episodes of longer duration, we must use judgment to determine if the duration and functional effects of the episodes are of equal severity and may be used to substitute for the listed finding in a determination of equivalence.

D. *Documentation*. The evaluation of disability on the basis of a mental disorder requires sufficient evidence to (1) establish the presence of a medically determinable mental impairment(s), (2) assess the degree of functional limitation the impairment(s) imposes, and (3) project the probable duration of the impairment(s). See §§ 404.1512 and 416.912 for a discussion of what we mean by ''evidence'' and how we will assist you in developing your claim. Medical evidence must be sufficiently complete and detailed as to symptoms, signs, and laboratory findings to permit an independent determination. In addition, we will consider information you provide from other sources when we determine how the established impairment(s) affects your ability to function. We will consider all relevant evidence in your case record.

1. *Sources of evidence*.

a. *Medical evidence*. There must be evidence from an acceptable medical source showing that you have a medically determinable mental impairment. See §§ 404.1508, 404.1513, 416.908, and 416.913. We will make every reasonable effort to obtain all relevant and available medical evidence about your mental impairment(s), including its history, and any records of mental status examinations, psychological testing, and hospitalizations and treatment. Whenever possible, and appropriate, medical source evidence should reflect the medical source's considerations of information from you and other concerned persons who are aware of your activities of daily living; social functioning; concentration, persistence, or pace; or episodes of decompensation. Also, in accordance with standard clinical practice, any medical source assessment of your mental functioning should take into account any sensory, motor, or communication abnormalities, as well as your cultural and ethnic background.

b. *Information from the individual*. Individuals with mental impairments can often provide accurate descriptions of their limitations. The presence of a mental impairment does not automatically rule you out as a reliable source of information about your own functional limitations. When you have a mental impairment and are willing and able to describe your limitations, we will try to obtain such information from you. However, you may not be willing or able to fully or accurately describe the limitations resulting from your impairment(s). Thus, we will carefully examine the statements you provide to determine if they are consistent with the information about, or general pattern of, the impairment as described by the medical and other evidence, and to determine whether additional information about your functioning is needed from you or other sources.

c. *Other information*. Other professional health care providers (e.g., psychiatric nurse, psychiatric social worker) can normally provide valuable functional information, which should be obtained when available and needed. If necessary, information should also be obtained from nonmedical sources, such as family members and others who know you, to supplement the record of your functioning in order to establish the consistency of the medical evidence and longitudinality of impairment severity, as discussed in 12.00D2. Other sources of information about functioning include, but are not limited to, records from work evaluations and rehabilitation progress notes.

2. *Need for longitudinal evidence*. Your level of functioning may vary considerably over time. The level of your functioning at a specific time may seem relatively adequate or, conversely, rather poor. Proper evaluation of your impairment(s) must take into account any variations in the level of your functioning in arriving at a determination of severity over time. Thus, it is vital to obtain evidence from relevant sources over a sufficiently long period prior to the date of adjudication to establish your impairment severity.

3. *Work attempts*. You may have attempted to work or may actually have worked during the period of time pertinent to the determination of disability. This may have been an independent attempt at work or it may have been in conjunction with a community mental health or sheltered program, and it may have been of either short or long duration. Information concerning your behavior during any attempt to work and the circumstances surrounding termination of your work effort are particularly useful in determining your ability or inability to function in a work setting. In addition, we should also

examine the degree to which you require special supports (such as those provided through supported employment or transitional employment programs) in order to work.

4. *Mental status examination.* The mental status examination is performed in the course of a clinical interview and is often partly assessed while the history is being obtained. A comprehensive mental status examination generally includes a narrative description of your appearance, behavior, and speech; thought process (e.g., loosening of associations); thought content (e.g., delusions); perceptual abnormalities (e.g., hallucinations); mood and affect (e.g., depression, mania); sensorium and cognition (e.g., orientation, recall, memory, concentration, fund of information, and intelligence); and judgment and insight. The individual case facts determine the specific areas of mental status that need to be emphasized during the examination.

5. *Psychological testing.*

a. Reference to a ''standardized psychological test'' indicates the use of a psychological test measure that has appropriate validity, reliability, and norms, and is individually administered by a qualified specialist. By ''qualified,'' we mean the specialist must be currently licensed or certified in the State to administer, score, and interpret psychological tests and have the training and experience to perform the test.

b. Psychological tests are best considered as standardized sets of tasks or questions designed to elicit a range of responses. Psychological testing can also provide other useful data, such as the specialist's observations regarding your ability to sustain attention and concentration, relate appropriately to the specialist, and perform tasks independently (without prompts or reminders). Therefore, a report of test results should include both the objective data and any clinical observations.

c. The salient characteristics of a good test are: (1) Validity, *i.e.,* the test measures what it is supposed to measure; (2) reliability, *i.e.,* the consistency of results obtained over time with the same test and the same individual; (3) appropriate normative data, *i.e.,* individual test scores can be compared to test data from other individuals or groups of a similar nature, representative of that population; and (4) wide scope of measurement, *i.e.,* the test should measure a broad range of facets/aspects of the domain being assessed. In considering the validity of a test result, we should note and resolve any discrepancies between formal test results and the individual's customary behavior and daily activities.

6. *Intelligence tests.*

a. The results of standardized intelligence tests may provide data that help verify the presence of intellectual disability or organic mental disorder, as well as the extent of any compromise in cognitive functioning. However, since the results of intelligence tests are only part of the overall assessment, the narrative report that accompanies the test results should comment on whether the IQ scores are considered valid and consistent with the developmental history and the degree of functional limitation.

b. Standardized intelligence test results are essential to the adjudication of all cases of intellectual disability that are not covered under the provisions of 12.05A. Listing 12.05A may be the basis for adjudicating cases where the results of standardized intelligence tests are unavailable, e.g., where your condition precludes formal standardized testing.

c. Due to such factors as differing means and standard deviations, identical IQ scores obtained from different tests do not always reflect a similar degree of intellectual functioning. The IQ scores in 12.05 reflect values from tests of general intelligence that have a mean of 100 and a standard deviation of 15; e.g., the Wechsler series. IQs obtained from standardized tests that deviate from a mean of 100 and a standard deviation of 15 require conversion to a percentile rank so that we can determine the actual degree of limitation reflected by the IQ scores. In cases where more than one IQ is customarily derived from the test administered, e.g., where verbal, performance, and full scale IQs are provided in the Wechsler series, we use the lowest of these in conjunction with 12.05.

d. Generally, it is preferable to use IQ measures that are wide in scope and include items that test both verbal and performance abilities. However, in special circumstances, such as the assessment of individuals with sensory, motor, or communication abnormalities, or those whose culture and background are not principally English-speaking, measures such as the Test of Nonverbal Intelligence, Third Edition (TONI–3), Leiter International Performance Scale-Revised (Leiter-R), or Peabody Picture Vocabulary Test—Third Edition (PPVT-III) may be used.

e. We may consider exceptions to formal standardized psychological testing when an individual qualified by training and experience to perform such an evaluation is not available, or in cases where appropriate standardized measures for your social, linguistic, and cultural background are not available. In these cases, the best indicator of severity is often the level of adaptive functioning and how you perform activities of daily living and social functioning.

7. *Personality measures and projective testing techniques.* Results from standardized personality measures, such as the Minnesota Multiphasic Personality Inventory-Revised (MMPI-II), or from projective types of techniques, such as the Rorschach and the Thematic Apperception Test (TAT), may provide useful data for evaluating several types of mental disorders. Such test results may be

useful for disability evaluation when corroborated by other evidence, including results from other psychological tests and information obtained in the course of the clinical evaluation, from treating and other medical sources, other professional health care providers, and nonmedical sources. Any inconsistency between test results and clinical history and observation should be explained in the narrative description.

8. *Neuropsychological assessments*. Comprehensive neuropsychological examinations may be used to establish the existence and extent of compromise of brain function, particularly in cases involving organic mental disorders. Normally, these examinations include assessment of cerebral dominance, basic sensation and perception, motor speed and coordination, attention and concentration, visual-motor function, memory across verbal and visual modalities, receptive and expressive speech, higher-order linguistic operations, problem-solving, abstraction ability, and general intelligence. In addition, there should be a clinical interview geared toward evaluating pathological features known to occur frequently in neurological disease and trauma, e.g., emotional lability, abnormality of mood, impaired impulse control, passivity and apathy, or inappropriate social behavior. The specialist performing the examination may administer one of the commercially available comprehensive neuropsychological batteries, such as the Luria-Nebraska or the Halstead-Reitan, or a battery of tests selected as relevant to the suspected brain dysfunction. The specialist performing the examination must be properly trained in this area of neuroscience.

9. *Screening tests*. In conjunction with clinical examinations, sources may report the results of screening tests; *i.e.*, tests used for gross determination of level of functioning. Screening instruments may be useful in uncovering potentially serious impairments, but often must be supplemented by other data. However, in some cases the results of screening tests may show such obvious abnormalities that further testing will clearly be unnecessary.

10. *Traumatic brain injury (TBI)*. In cases involving TBI, follow the documentation and evaluation guidelines in 11.00F.

11. *Anxiety disorders*. In cases involving agoraphobia and other phobic disorders, panic disorders, and posttraumatic stress disorders, documentation of the anxiety reaction is essential. At least one detailed description of your typical reaction is required. The description should include the nature, frequency, and duration of any panic attacks or other reactions, the precipitating and exacerbating factors, and the functional effects. If the description is provided by a medical source, the reporting physician or psychologist should indicate the extent to which the description reflects his or her own observations and the source of any ancillary information. Statements of other persons who have observed you may be used for this description if professional observation is not available.

12. *Eating disorders*. In cases involving anorexia nervosa and other eating disorders, the primary manifestations may be mental or physical, depending upon the nature and extent of the disorder. When the primary functional limitation is physical, e.g., when severe weight loss and associated clinical findings are the chief cause of inability to work, we may evaluate the impairment under the appropriate physical body system listing. Of course, we must also consider any mental aspects of the impairment, unless we can make a fully favorable determination or decision based on the physical impairment(s) alone.

E. *Chronic mental impairments*. Particular problems are often involved in evaluating mental impairments in individuals who have long histories of repeated hospitalizations or prolonged outpatient care with supportive therapy and medication. For instance, if you have chronic organic, psychotic, and affective disorders, you may commonly have your life structured in such a way as to minimize your stress and reduce your symptoms and signs. In such a case, you may be much more impaired for work than your symptoms and signs would indicate. The results of a single examination may not adequately describe your sustained ability to function. It is, therefore, vital that we review all pertinent information relative to your condition, especially at times of increased stress. We will attempt to obtain adequate descriptive information from all sources that have treated you in the time period relevant to the determination or decision.

F. *Effects of structured settings*. Particularly in cases involving chronic mental disorders, overt symptomatology may be controlled or attenuated by psychosocial factors such as placement in a hospital, halfway house, board and care facility, or other environment that provides similar structure. Highly structured and supportive settings may also be found in your home. Such settings may greatly reduce the mental demands placed on you. With lowered mental demands, overt symptoms and signs of the underlying mental disorder may be minimized. At the same time, however, your ability to function outside of such a structured or supportive setting may not have changed. If your symptomatology is controlled or attenuated by psychosocial factors, we must consider your ability to function outside of such highly structured settings. For these reasons, identical paragraph C criteria are included in 12.02, 12.03, and 12.04. The paragraph C criterion of 12.06 reflects the uniqueness of agoraphobia, an anxiety disorder manifested by an overwhelming fear of leaving the home.

G. *Effects of medication*. We must give attention to the effects of medication on your symptoms, signs, and ability to function. While drugs used to modify psychological functions and mental states may control certain primary manifestations of a mental disorder, e.g., hallucinations, impaired attention, restlessness, or hyperactivity, such treatment may not affect all functional limitations imposed by the mental disorder. In cases where overt symptomatology is attenuated by the use of such drugs, particular attention must be focused on the functional limitations that may persist. We will consider these functional limitations in assessing the severity of your impairment. See the paragraph C criteria in 12.02, 12.03, 12.04, and 12.06.

Drugs used in the treatment of some mental illnesses may cause drowsiness, blunted effect, or other side effects involving other body systems. We will consider such side effects when we evaluate the overall severity of your impairment. Where adverse effects of medications contribute to the impairment severity and the impairment(s) neither meets nor is equivalent in severity to any listing but is nonetheless severe, we will consider such adverse effects in the RFC assessment.

H. *Effects of treatment*. With adequate treatment some individuals with chronic mental disorders not only have their symptoms and signs ameliorated, but they also return to a level of function close to the level of function they had before they developed symptoms or signs of their mental disorders. Treatment may or may not assist in the achievement of a level of adaptation adequate to perform sustained SGA. See the paragraph C criteria in 12.02, 12.03, 12.04, and 12.06.

I. *Technique for reviewing evidence in mental disorders claims to determine the level of impairment severity*. We have developed a special technique to ensure that we obtain, consider, and properly evaluate all the evidence we need to evaluate impairment severity in claims involving mental impairment(s). We explain this technique in §§404.1520a and 416.920a.

12.01 Category of Impairments—Mental

12.02 *Organic Mental Disorders:* Psychological or behaviorial abnormalities associated with a dysfunction of the brain. History and physical examination or laboratory tests demonstrate the presence of a specific organic factor judged to be etiologically related to the abnormal mental state and loss of previously acquired functional abilities.

The required level of severity for these disorders is met when the requirements in both A and B are satisfied, or when the requirements in C are satisfied.

A. Demonstration of a loss of specific cognitive abilities or affective changes and the medically documented persistence of at least one of the following:

1. Disorientation to time and place; or

2. Memory impairment, either short-term (inability to learn new information), intermediate, or long-term (inability to remember information that was known sometime in the past); or

3. Perceptual or thinking disturbances (e.g., hallucinations, delusions); or

4. Change in personality; or

5. Disturbance in mood; or

6. Emotional lability (e.g., explosive temper outbursts, sudden crying, etc.) and impairment in impulse control; or

7. Loss of measured intellectual ability of at least 15 I.Q. points from premorbid levels or overall impairment index clearly within the severely impaired range on neuropsychological testing, e.g., the Luria-Nebraska, Halstead-Reitan, etc.;

AND

B. Resulting in at least two of the following:

1. Marked restriction of activities of daily living; or

2. Marked difficulties in maintaining social functioning; or

3. Marked difficulties in maintaining concentration, persistence, or pace; or

4. Repeated episodes of decompensation, each of extended duration;

OR

C. Medically documented history of a chronic organic mental disorder of at least 2 years' duration that has caused more than a minimal limitation of ability to do basic work activities, with symptoms or signs currently attenuated by medication or psychosocial support, and one of the following:

1. Repeated episodes of decompensation, each of extended duration; or

2. A residual disease process that has resulted in such marginal adjustment that even a minimal increase in mental demands or change in the environment would be predicted to cause the individual to decompensate; or

3. Current history of 1 or more years' inability to function outside a highly supportive living arrangement, with an indication of continued need for such an arrangement.

12.03 *Schizophrenic, Paranoid and Other Psychotic Disorders:* Characterized by the onset of psychotic features with deterioration from a previous level of functioning.

The required level of severity for these disorders is met when the requirements in both A and B are satisfied, or when the requirements in C are satisfied.

A. Medically documented persistence, either continuous or intermittent, of one or more of the following:

1. Delusions or hallucinations; or

2. Catatonic or other grossly disorganized behavior; or

3. Incoherence, loosening of associations, illogical thinking, or poverty of content of speech if associated with one of the following:

a. Blunt affect; or

b. Flat affect; or

c. Inappropriate affect;

or

4. Emotional withdrawal and/or isolation;

AND

B. Resulting in at least two of the following:

1. Marked restriction of activities of daily living; or

2. Marked difficulties in maintaining social functioning; or

3. Marked difficulties in maintaining concentration, persistence, or pace; or

4. Repeated episodes of decompensation, each of extended duration;

OR

C. Medically documented history of a chronic schizophrenic, paranoid, or other psychotic disorder of at least 2 years' duration that has caused more than a minimal limitation of ability to do basic work activities, with symptoms or signs currently attenuated by medication or psychosocial support, and one of the following:

1. Repeated episodes of decompensation, each of extended duration; or

2. A residual disease process that has resulted in such marginal adjustment that even a minimal increase in mental demands or change in the environment would be predicted to cause the individual to decompensate; or

3. Current history of 1 or more years' inability to function outside a highly supportive living arrangement, with an indication of continued need for such an arrangement.

12.04 *Affective Disorders:* Characterized by a disturbance of mood, accompanied by a full or partial manic or depressive syndrome. Mood refers to a prolonged emotion that colors the whole psychic life; it generally involves either depression or elation.

The required level of severity for these disorders is met when the requirements in both A and B are satisfied, or when the requirements in C are satisfied.

A. Medically documented persistence, either continuous or intermittent, of one of the following:

1. Depressive syndrome characterized by at least four of the following:

a. Anhedonia or pervasive loss of interest in almost all activites; or

b. Appetite disturbance with change in weight; or

c. Sleep disturbance; or

d. Psychomotor agitation or retardation; or

e. Decreased energy; or

f. Feelings of guilt or worthlessness; or

g. Difficulty concentrating or thinking; or

h. Thoughts of suicide; or

i. Hallucinations, delusions, or paranoid thinking; or

2. Manic syndrome characterized by at least three of the following:

a. Hyperactivity; or

b. Pressure of speech; or

c. Flight of ideas; or

d. Inflated self-esteem; or

e. Decreased need for sleep; or

f. Easy distractability; or

g. Involvement in activities that have a high probability of painful consequences which are not recognized; or

h. Hallucinations, delusions or paranoid thinking;

or

3. Bipolar syndrome with a history of episodic periods manifested by the full symptomatic picture of both manic and depressive syndromes (and currently characterized by either or both syndromes);

AND

B. Resulting in at least two of the following:

1. Marked restriction of activities of daily living; or

2. Marked difficulties in maintaining social functioning; or

3. Marked difficulties in maintaining concentration, persistence, or pace; or

4. Repeated episodes of decompensation, each of extended duration;

OR

C. Medically documented history of a chronic affective disorder of at least 2 years' duration that has caused more than a minimal limitation of ability to do basic work activities, with symptoms or signs currently attenuated by medication or psychosocial support, and one of the following:

1. Repeated episodes of decompensation, each of extended duration; or

2. A residual disease process that has resulted in such marginal adjustment that even a minimal increase in mental demands or change in the environment would be predicted to cause the individual to decompensate; or

3. Current history of 1 or more years' inability to function outside a highly supportive living arrangement, with an indication of continued need for such an arrangement.

12.05 *Intellectual disability:* Intellectual disability refers to significantly subaverage general intellectual functioning with deficits in adaptive functioning initially manifested during the developmental period; *i.e.*, the evidence demonstrates or supports onset of the impairment before age 22.

The required level of severity for this disorder is met when the requirements in A, B, C, or D are satisfied.

A. Mental incapacity evidenced by dependence upon others for personal needs (e.g., toileting, eating, dressing, or bathing) and inability to follow directions, such that the use of standardized measures of intellectual functioning is precluded;

OR

B. A valid verbal, performance, or full scale IQ of 59 or less;

OR

C. A valid verbal, performance, or full scale IQ of 60 through 70 and a physical or other mental impairment imposing an additional and significant work-related limitation of function;

OR

D. A valid verbal, performance, or full scale IQ of 60 through 70, resulting in at least two of the following:

1. Marked restriction of activities of daily living; or

2. Marked difficulties in maintaining social functioning; or

3. Marked difficulties in maintaining concentration, persistence, or pace; or

4. Repeated episodes of decompensation, each of extended duration.

12.06 *Anxiety Related Disorders:* In these disorders anxiety is either the predominant disturbance or it is experienced if the individual attempts to master symptoms; for example, confronting the dreaded object or situation in a phobic disorder or resisting the obsessions or compulsions in obsessive compulsive disorders.

The required level of severity for these disorders is met when the requirements in both A and B are satisfied, or when the requirements in both A and C are satisfied.

A. Medically documented findings of at least one of the following:

1. Generalized persistent anxiety accompanied by three out of four of the following signs or symptoms:

a. Motor tension; or

b. Autonomic hyperactivity; or

c. Apprehensive expectation; or

d. Vigilance and scanning;

or

2. A persistent irrational fear of a specific object, activity, or situation which results in a compelling desire to avoid the dreaded object, activity, or situation; or

3. Recurrent severe panic attacks manifested by a sudden unpredictable onset of intense apprehension, fear, terror and sense of impending doom occurring on the average of at least once a week; or

4. Recurrent obsessions or compulsions which are a source of marked distress; or

5. Recurrent and intrusive recollections of a traumatic experience, which are a source of marked distress;

AND

B. Resulting in at least two of the following:

1. Marked restriction of activities of daily living; or

2. Marked difficulties in maintaining social functioning; or

3. Marked difficulties in maintaining concentration, persistence, or pace; or

4. Repeated episodes of decompensation, each of extended duration.

OR

C. Resulting in complete inability to function independently outside the area of one's home.

12.07 *Somatoform Disorders:* Physical symptoms for which there are no demonstrable organic findings or known physiological mechanisms.

The required level of severity for these disorders is met when the requirements in both A and B are satisfied.

A. Medically documented by evidence of one of the following:

1. A history of multiple physical symptoms of several years duration, beginning before age 30, that have caused the individual to take medicine frequently, see a physician often and alter life patterns significantly; or

2. Persistent nonorganic disturbance of one of the following:

a. Vision; or

b. Speech; or

c. Hearing; or

d. Use of a limb; or

e. Movement and its control (e.g., coordination disturbance, psychogenic seizures, akinesia, dyskinesia; or

f. Sensation (e.g., diminished or heightened).

3. Unrealistic interpretation of physical signs or sensations associated with the preoccupation or belief that one has a serious disease or injury;

AND

B. Resulting in at least two of the following:

1. Marked restriction of activities of daily living; or

2. Marked difficulties in maintaining social functioning; or

3. Marked difficulties in maintaining concentration, persistence, or pace; or

4. Repeated episodes of decompensation, each of extended duration.

12.08 *Personality Disorders:* A personality disorder exists when personality traits are inflexible and maladaptive and cause either significant impairment in social or occupational functioning or subjective distress. Characteristic features are typical of the individual's long-term functioning and are not limited to discrete episodes of illness.

The required level of severity for these disorders is met when the requirements in both A and B are satisfied.

A. Deeply ingrained, maladaptive patterns of behavior associated with one of the following:

1. Seclusiveness or autistic thinking; or

2. Pathologically inappropriate suspiciousness or hostility; or

3. Oddities of thought, perception, speech and behavior; or

4. Persistent disturbances of mood or affect; or

5. Pathological dependence, passivity, or aggressivity; or

6. Intense and unstable interpersonal relationships and impulsive and damaging behavior;

AND

B. Resulting in at least two of the following:

1. Marked restriction of activities of daily living; or

2. Marked difficulties in maintaining social functioning; or

3. Marked difficulties in maintaining concentration, persistence, or pace; or

4. Repeated episodes of decompensation, each of extended duration.

12.09 *Substance Addiction Disorders:* Behavioral changes or physical changes associated with the regular use of substances that affect the central nervous system.

The required level of severity for these disorders is met when the requirements in any of the following (A through I) are satisfied.

A. Organic mental disorders. Evaluate under 12.02.

B. Depressive syndrome. Evaluate under 12.04.

C. Anxiety disorders. Evaluate under 12.06.

D. Personality disorders. Evaluate under 12.08.

E. Peripheral neuropathies. Evaluate under 11.14.

F. Liver damage. Evaluate under 5.05.

G. Gastritis. Evaluate under 5.00.

H. Pancreatitis. Evaluate under 5.08.

I. Seizures. Evaluate under 11.02 or 11.03.

12.10 *Autistic disorder and other pervasive developmental disorders:* Characterized by qualitative deficits in the development of reciprocal social interaction, in the development of verbal and nonverbal communication skills, and in imaginative activity. Often, there is a markedly restricted repertoire of activities and interests, which frequently are stereotyped and repetitive.

The required level of severity for these disorders is met when the requirements in both A and B are satisfied.

A. Medically documented findings of the following:

1. For autistic disorder, all of the following:

a. Qualitative deficits in reciprocal social interaction; and

b. Qualitative deficits in verbal and nonverbal communication and in imaginative activity; and

c. Markedly restricted repertoire of activities and interests;

OR

2. For other pervasive developmental disorders, both of the following:

a. Qualitative deficits in reciprocal social interaction; and

b. Qualitative deficits in verbal and nonverbal communication and in imaginative activity;

AND

B. Resulting in at least two of the following:

1. Marked restriction of activities of daily living; or

2. Marked difficulties in maintaining social functioning; or

3. Marked difficulties in maintaining concentration, persistence, or pace; or

4. Repeated episodes of decompensation, each of extended duration.

13.00 Malignant Neoplastic Diseases

A. *What impairments do these listings cover?* We use these listings to evaluate all malignant neoplasms except certain neoplasms associated with human immunodeficiency virus (HIV) infection. We use the criteria in 14.08E to evaluate carcinoma of the cervix, Kaposi's sarcoma, lymphoma, and squamous cell carcinoma of the anal canal and anal margin if you also have HIV infection.

B. *What do we consider when we evaluate malignant neoplastic diseases under these listings?* We consider factors such as the:

1. Origin of the malignancy.

2. Extent of involvement.

3. Duration, frequency, and response to antineoplastic therapy. Antineoplastic therapy means surgery, irradiation, chemotherapy, hormones, immunotherapy, or bone marrow or stem cell transplantation. When we refer to surgery as an antineoplastic treatment, we mean surgical excision for treatment, not for diagnostic purposes.

4. Effects of any post-therapeutic residuals.

C. *How do we apply these listings?* We apply the criteria in a specific listing to a malignancy originating from that specific site.

D. *What evidence do we need?*

1. We need medical evidence that specifies the type, extent, and site of the primary, recurrent, or metastatic lesion. When the primary site cannot be identified, we will use evidence documenting the site(s) of metastasis to evaluate the impairment under 13.27.

2. For operative procedures, including a biopsy or a needle aspiration, we generally need a copy of both the:

a. Operative note.

b. Pathology report.

3. When we cannot get these documents, we will accept the summary of hospitalization(s) or other medical reports. This evidence should include details of the findings at surgery and, whenever appropriate, the pathological findings.

4. In some situations we may also need evidence about recurrence, persistence, or progression of the malignancy, the response to therapy, and any significant residuals. (*See* 13.00G.)

E. *When do we need longitudinal evidence?*

1. *Tumors with distant metastases.* We generally do not need longitudinal evidence for tumors that have metastasized beyond the regional lymph nodes because these tumors usually meet the requirements of a listing. Exceptions are for tumors with distant metastases that are expected to respond to antineoplastic therapy. For these exceptions, we usually need a longitudinal record of 3 months after therapy starts to determine whether the intended effect of therapy has been achieved and is likely to persist.

2. *Other malignancies.* When there are no distant metastases, many of the listings require that we consider your response to initial antineoplastic therapy; that is, the initial planned treatment regimen. This therapy may consist of a single modality or a combination of modalities; that is, multimodal therapy (see 13.00I3).

3. *Types of treatment.* Whenever the initial planned therapy is a single modality, enough time must pass to allow a determination about whether the therapy will achieve its intended effect. If the treatment fails, the failure will often happen within 6 months after the treatment starts, and there will often be a change in the treatment regimen. Whenever the initial planned therapy is multimodal, a determination about the effectiveness of the therapy usually cannot be made until the effects of all the planned modalities can be determined. In some cases, we may need to defer adjudication until the effectiveness of therapy can be assessed. However, we do not need to defer adjudication to determine whether the therapy will achieve its intended effect if we can make a fully favorable determination or decision based on the length and effects of therapy, or the residuals of the malignancy or therapy (*see* 13.00G).

F. *How do we evaluate impairments that do not meet one of the malignant neoplastic diseases listings?*

1. These listings are only examples of malignant neoplastic diseases that we consider severe enough to prevent you from doing any gainful activity. If your severe impairment(s) does not meet the criteria of any of these listings, we must also consider whether you have an impairment(s) that meets the criteria of a listing in another body system.

2. If you have a severe medically determinable impairment(s) that does not meet a listing, we will determine whether your impairment(s) medically equals a listing. (*See* §§ 404.1526 and 416.926.) If your impairment(s) does not meet or medically equal a listing, you may or may not have the residual functional capacity to engage in substantial gainful activity. In that situation, we proceed to the fourth, and, if necessary, the fifth steps of the sequential evaluation process in §§ 404.1520 and 416.920. If you are an adult, we use the rules in §§ 404.1594 and 416.994, as appropriate, when we decide whether you continue to be disabled.

G. *How do we consider the effects of therapy?*

1. *How we consider the effects of therapy under the listings.* In many cases, malignancies meet listing criteria only if the therapy does not achieve the intended effect: the malignancy persists, progresses, or recurs despite treatment. However, as explained in the following paragraphs, we will not delay adjudication if we can make a fully favorable determination or decision based on the evidence in the case record.

2. *Effects can vary widely.*

a. Because the therapy and its toxicity may vary widely, we consider each case on an individual basis. We will request a specific description of the therapy, including these items:

i. Drugs given.

ii. Dosage.

iii. Frequency of drug administration.

iv. Plans for continued drug administration.

v. Extent of surgery.

vi. Schedule and fields of radiation therapy.

b. We will also request a description of the complications or adverse effects of therapy, such as the following:

i. Continuing gastrointestinal symptoms.

ii. Persistent weakness.

iii. Neurological complications.

iv. Cardiovascular complications.

v. Reactive mental disorders.

3. *Effects of therapy may change.* Because the severity of the adverse effects of antineoplastic therapy may change during treatment, enough time must pass to allow us to evaluate the therapy's effect. The residual effects of treatment are temporary in most instances. But on occasion, the effects may be disabling for a consecutive period of at least 12 months.

4. *When the initial antineoplastic therapy is effective.* We evaluate any post-therapeutic residual impairment(s) not included in these listings under the criteria for the affected body system. We must consider any complications of therapy. When the residual impairment(s) does not meet or medically equal a listing, we must consider its effect on your ability to do substantial gainful activity.

H. *How long do we consider your impairment to be disabling?*

1. In some listings, we specify that we will consider your impairment to be disabling until a particular point in time (for example, at least 18 months from the date of diagnosis). We may consider your impairment to be disabling beyond this point when the medical and other evidence justifies it.

2. When a listing does not contain such a specification, we will consider an impairment(s) that meets or medically equals a listing in this body system to be disabling until at least 3 years after onset of complete remission. When the impairment(s) has been in complete remission for at least 3 years, that is, the original tumor or a recurrence (or relapse) and any metastases have not been evident for at least 3 years, the impairment(s) will no longer meet or medically equal the criteria of a listing in this body system.

3. Following the appropriate period, we will consider any residuals, including residuals of the malignancy or therapy (see 13.00G), in determining whether you are disabled. If you have a recurrence or relapse of your malignancy, your impairment may meet or medically equal one of the listings in this body system again.

I. *What do we mean by the following terms?*

1. *Inoperable:* Surgery is thought to be of no therapeutic value or the surgery cannot be performed; for example, when you cannot tolerate anesthesia or surgery because of another impairment(s), or you have a tumor that is too large or that has invaded crucial structures. This term does not include situations in which your tumor could have been surgically removed but another method of treatment was chosen; for example, an attempt at organ preservation. Your physician may determine whether a tumor is inoperable before or after you receive neoadjuvant therapy. *Neoadjuvant therapy* is antineoplastic therapy, such as chemotherapy or radiation, given before surgery in order to reduce the size of the tumor.

2. *Metastases:* The spread of tumor cells by blood, lymph, or other body fluid. This term does not include the spread of tumor cells by direct extension of the tumor to other tissues or organs.

3. *Multimodal therapy:* A combination of at least two types of treatment modalities given in close proximity as a unified whole and usually planned before any treatment has begun. There are three types of treatment modalities: Surgery, radiation, and systemic drug therapy (chemotherapy, hormonal therapy, and immunotherapy).

Examples of multimodal therapy include:

a. Surgery followed by chemotherapy or radiation.

b. Chemotherapy followed by surgery.

c. Chemotherapy and concurrent radiation.

4. *Persistent:* Failure to achieve a complete remission.

5. *Progressive:* The malignancy becomes more extensive after treatment.

6. *Recurrent, relapse:* A malignancy that was in complete remission or entirely removed by surgery has returned.

7. *Unresectable:* Surgery was performed, but the malignant tumor was not removed. This term includes situations in which your tumor is incompletely resected or the surgical margins are positive. It does not include situations in which a tumor is completely resected but you are receiving adjuvant therapy. Adjuvant therapy is antineoplastic therapy, such as chemotherapy or radiation, given after surgery in order to eliminate any remaining cancer cells and lessen the chance of recurrence.

J. *Can we establish the existence of a disabling impairment prior to the date of the evidence that shows the malignancy satisfies the criteria of a listing?* Yes. We will consider factors such as:

1. The type of malignancy and its location.

2. The extent of involvement when the malignancy was first demonstrated.

3. Your symptoms.

K. *How do we evaluate specific malignant neoplastic diseases?*

1. *Lymphoma.*

a. Many indolent (non-aggressive) lymphomas are controlled by well-tolerated treatment modalities, although the lymphomas may produce intermittent symptoms and signs. Therefore, we may defer adjudicating these cases for an appropriate period after therapy is initiated to determine whether the therapy will achieve its intended effect, which is usually to stabilize the disease process. (See 13.00E3.) When your disease has been stabilized, we will assess severity based on the extent of involvement of other organ systems and residuals from therapy.

b. A change in therapy for indolent lymphomas is usually an indicator that the therapy is not achieving its intended effect. However, your impairment will not meet the requirements of 13.05A2 if your therapy is changed solely because you or your physician choose to change it, not because of a failure to achieve stability.

c. We consider Hodgkin's disease that recurs more than 12 months after completing initial antineoplastic therapy to be a new disease rather than a recurrence.

2. *Leukemia.*

a. *Acute leukemia.* The initial diagnosis of acute leukemia, including the accelerated or blast phase of chronic myelogenous (granulocytic) leukemia, is based upon definitive bone marrow examination. Additional diagnostic information is based on chromosomal analysis, cytochemical and surface marker studies on the abnormal cells, or other methods consistent with the prevailing state of medical knowledge and clinical practice. Recurrent disease must be documented

by peripheral blood, bone marrow, or cerebrospinal fluid examination, or by testicular biopsy. The initial and follow-up pathology reports should be included.

b. *Chronic myelogenous leukemia (CML).* The diagnosis of CML should be based upon documented granulocytosis, including immature forms such as differentiated or undifferentiated myelocytes and myeloblasts, and a chromosomal analysis that demonstrates the Philadelphia chromosome. In the absence of a chromosomal analysis, or if the Philadelphia chromosome is not present, the diagnosis may be made by other methods consistent with the prevailing state of medical knowledge and clinical practice.

c. *Chronic lymphocytic leukemia.*

i. The diagnosis of chronic lymphocytic leukemia (CLL) must be documented by evidence of a chronic lymphocytosis of at least 10,000/mm^3 for 3 months or longer, or other acceptable diagnostic techniques consistent with the prevailing state of medical knowledge and clinical practice.

ii. We evaluate the complications and residual impairment(s) from CLL under the appropriate listings, such as 13.05A2, 7.02, and 7.15.

d. *Elevated white cell count.* In cases of chronic leukemia (either myelogenous or lymphocytic), an elevated white cell count, in itself, is not ordinarily a factor in determining the severity of the impairment.

3. *Macroglobulinemia or heavy chain disease.* The diagnosis of these diseases must be confirmed by protein electrophoresis or immunoelectrophoresis. We evaluate the resulting impairment(s) under the criteria of 7.02, 7.06, 7.08, or any other affected body system.

4. *Bilateral primary breast cancer.* We evaluate bilateral primary breast cancer (synchronous or metachronous) under 13.10A, which covers local primary disease, and not as a primary disease that has metastasized.

5. *Carcinoma-in-situ.* Carcinoma-in-situ, or preinvasive carcinoma, usually responds to treatment. When we use the term ''carcinoma'' in these listings, it does not include carcinoma-in-situ.

6. *Brain tumors.* We use the criteria in 13.13 to evaluate malignant brain tumors. We consider a brain tumor to be malignant if it is classified as grade II or higher under the World Health Organization (WHO) classification of tumors of the central nervous system (*WHO Classification of Tumours of the Central Nervous System*, 2007). We evaluate any complications of malignant brain tumors, such as resultant neurological or psychological impairments, under the criteria for the affected body system. We evaluate benign brain tumors under 11.05.

L. *How do we evaluate malignant neoplastic diseases treated by bone marrow or stem cell transplantation?* Bone marrow or stem cell transplantation is performed for a variety of malignant neoplastic diseases.

1. *Acute leukemia (including T-cell lymphoblastic lymphoma) or accelerated or blast phase of CML.* If you undergo bone marrow or stem cell transplantation for any of these disorders, we will consider you to be disabled until at least 24 months from the date of diagnosis or relapse, or at least 12 months from the date of transplantation, whichever is later.

2. *Lymphoma, multiple myeloma, or chronic phase of CML.* If you undergo bone marrow or stem cell transplantation for any of these disorders, we will consider you to be disabled until at least 12 months from the date of transplantation.

3. *Other malignancies.* We will evaluate any other malignant neoplastic disease treated with bone marrow or stem cell transplantation under 13.28, regardless of whether there is another listing that addresses that impairment. The length of time we will consider you to be disabled depends on whether you undergo allogeneic or autologous transplantation.

a. *Allogeneic bone marrow or stem cell transplantation.* If you undergo allogeneic transplantation (transplantation from an unrelated donor or a related donor other than an identical twin), we will consider you to be disabled until at least 12 months from the date of transplantation.

b. *Autologous bone marrow or stem cell transplantation.* If you undergo autologous transplantation (transplantation of your own cells or cells from your identical twin (syngeneic transplantation)), we will consider you to be disabled until at least 12 months from the date of the first treatment under the treatment plan that includes transplantation. The first treatment usually refers to the initial therapy given to prepare you for transplantation.

4. *Evaluating disability after the appropriate time period has elapsed.* We consider any residual impairment(s), such as complications arising from:

a. Graft-versus-host (GVH) disease.

b. Immunosuppressant therapy, such as frequent infections.

c. Significant deterioration of other organ systems.

13.01 Category of Impairments, Malignant Neoplastic Diseases

13.02 *Soft tissue tumors of the head and neck (except salivary glands—13.08—and thyroid gland—13.09).*

A. Inoperable or unresectable.

OR

B. Persistent disease following initial multimodal antineoplastic therapy.

OR

C. Recurrent disease following initial antineoplastic therapy, except recurrence in the true vocal cord.

OR

D. With metastases beyond the regional lymph nodes.

OR

E. Soft tissue tumors of the head and neck not addressed in A-D, with multimodal antineoplastic therapy. Consider under a disability until at least 18 months from the date of diagnosis. Thereafter, evaluate any residual impairment(s) under the criteria for the affected body system.

13.03 *Skin.*

A. Sarcoma or carcinoma with metastases to or beyond the regional lymph nodes.

OR

B. Melanoma, with either 1 or 2:

1. Recurrent after wide excision (except an additional primary melanoma at a different site, which is not considered to be recurrent disease).

2. With metastases as described in a, b, or c:

a. Metastases to one or more clinically apparent nodes; that is, nodes that are detected by imaging studies (excluding lymphoscintigraphy) or by clinical examination.

b. If the nodes are not clinically apparent, with metastases to four or more nodes.

c. Metastases to adjacent skin (satellite lesions) or distant sites.

13.04 *Soft tissue sarcoma.*

A. With regional or distant metastases.

OR

B. Persistent or recurrent following initial antineoplastic therapy.

13.05 *Lymphoma (including mycosis fungoides, but excluding T-cell lymphoblastic lymphoma—13.06).* (*See* 13.00K1 and 13.00K2c.)

A. Non-Hodgkin's lymphoma, as described in 1 or 2:

1. Aggressive lymphoma (including diffuse large B-cell lymphoma) persistent or recurrent following initial antineoplastic therapy.

2. Indolent lymphoma (including mycosis fungoides and follicular small cleaved cell) requiring initiation of more than one antineoplastic treatment regimen within a consecutive 12-month period. Consider under a disability from at least the date of initiation of the treatment regimen that failed within 12 months.

OR

B. Hodgkin's disease with failure to achieve clinically complete remission, or recurrent disease within 12 months of completing initial antineoplastic therapy.

OR

C. With bone marrow or stem cell transplantation. Consider under a disability until at least 12 months from the date of transplantation. Thereafter, evaluate any residual impairment(s) under the criteria for the affected body system.

13.06 *Leukemia.* (*See* 13.00K2.)

A. Acute leukemia (including T-cell lymphoblastic lymphoma). Consider under a disability until at least 24 months from the date of diagnosis or relapse, or at least 12 months from the date of bone marrow or stem cell transplantation, whichever is later. Thereafter, evaluate any residual impairment(s) under the criteria for the affected body system.

OR

B. Chronic myelogenous leukemia, as described in 1 or 2:

1. Accelerated or blast phase. Consider under a disability until at least 24 months from the date of diagnosis or relapse, or at least 12 months from the date of bone marrow or stem cell transplantation, whichever is later. Thereafter, evaluate any residual impairment(s) under the criteria for the affected body system.

2. Chronic phase, as described in a or b:

a. Consider under a disability until at least 12 months from the date of bone marrow or stem cell transplantation. Thereafter, evaluate any residual impairment(s) under the criteria for the affected body system.

b. Progressive disease following initial antineoplastic therapy.

13.07 *Multiple myeloma (confirmed by appropriate serum or urine protein electrophoresis and bone marrow findings).*

A. Failure to respond or progressive disease following initial antineoplastic therapy.

OR

B. With bone marrow or stem cell transplantation. Consider under a disability until at least 12 months from the date of transplantation. Thereafter, evaluate any residual impairment(s) under the criteria for the affected body system.

13.08 *Salivary glands*—carcinoma or sarcoma with metastases beyond the regional lymph nodes.

13.09 *Thyroid gland.*

A. Anaplastic (undifferentiated) carcinoma.

OR

B. Carcinoma with metastases beyond the regional lymph nodes progressive despite radioactive iodine therapy.

OR

C. Medullary carcinoma with metastases beyond the regional lymph nodes.

13.10 *Breast (except sarcoma—13.04).* (*See* 13.00K4.)

A. Locally advanced carcinoma (inflammatory carcinoma, tumor of any size with direct extension to the chest wall or skin, tumor of any size with metastases to the ipsilateral internal mammary nodes).

OR

B. Carcinoma with metastases to the supraclavicular or infraclavicular nodes, to 10 or more axillary nodes, or with distant metastases.

OR

C. Recurrent carcinoma, except local recurrence that remits with antineoplastic therapy.

13.11 *Skeletal system*—sarcoma.

A. Inoperable or unresectable.

OR

B. Recurrent tumor (except local recurrence) after initial antineoplastic therapy.

OR

C. With distant metastases.

OR

D. All other tumors originating in bone with multimodal antineoplastic therapy. Consider under a disability for 12 months from the date of diagnosis. Thereafter, evaluate any residual impairment(s) under the criteria for the affected body system.

13.12 *Maxilla, orbit, or temporal fossa.*

A. Sarcoma or carcinoma of any type with regional or distant metastases.

OR

B. Carcinoma of the antrum with extension into the orbit or ethmoid or sphenoid sinus.

OR

C. Tumors with extension to the base of the skull, orbit, meninges, or sinuses.

13.13 *Nervous system.* (*See* 13.00K6.)

A. Central nervous system malignant neoplasms (brain and spinal cord), as described in 1 or 2:

1. Highly malignant tumors, such as medulloblastoma or other primitive neuroectodermal tumors (PNETs) with documented metastases, grades III and IV astrocytomas, glioblastoma multiforme, ependymoblastoma, diffuse intrinsic brain stem gliomas, or primary sarcomas.

2. Progressive or recurrent following initial antineoplastic therapy.

OR

B. Peripheral nerve or spinal root neoplasm, as described in 1 or 2:

1. Metastatic.

2. Progressive or recurrent following initial antineoplastic therapy.

13.14 *Lungs.*

A. Non-small-cell carcinoma—inoperable, unresectable, recurrent, or metastatic disease to or beyond the hilar nodes.

OR

B. Small-cell (oat cell) carcinoma.

OR

C. Carcinoma of the superior sulcus (including Pancoast tumors) with multimodal antineoplastic therapy. Consider under a disability until at least 18 months from the date of diagnosis. Thereafter, evaluate any residual impairment(s) under the criteria for the affected body system.

13.15 *Pleura or mediastinum.*

A. Malignant mesothelioma of pleura.

OR

B. Tumors of the mediastinum, as described in 1 or 2:

1. With metastases to or beyond the regional lymph nodes.

2. Persistent or recurrent following initial antineoplastic therapy.

13.16 *Esophagus or stomach.*

A. Carcinoma or sarcoma of the esophagus.

OR

B. Carcinoma or sarcoma of the stomach, as described in 1 or 2:

1. Inoperable, unresectable, extending to surrounding structures, or recurrent.

2. With metastases to or beyond the regional lymph nodes.

13.17 *Small intestine*—carcinoma, sarcoma, or carcinoid.

A. Inoperable, unresectable, or recurrent.

OR

B. With metastases beyond the regional lymph nodes.

13.18 *Large intestine (from ileocecal valve to and including anal canal).*

A. Adenocarcinoma that is inoperable, unresectable, or recurrent.

OR

B. Squamous cell carcinoma of the anus, recurrent after surgery.

OR

C. With metastases beyond the regional lymph nodes.

13.19 *Liver or gallbladder*—tumors of the liver, gallbladder, or bile ducts.

13.20 *Pancreas.*

A. Carcinoma (except islet cell carcinoma).

OR

B. Islet cell carcinoma that is inoperable or unresectable and physiologically active.

13.21 *Kidneys, adrenal glands, or ureters*—carcinoma.

A. Inoperable, unresectable, or recurrent.

OR

B. With metastases to or beyond the regional lymph nodes.

13.22 *Urinary bladder*—carcinoma.

A. With infiltration beyond the bladder wall.

OR

B. Recurrent after total cystectomy.

OR

C. Inoperable or unresectable.

OR

D. With metastases to or beyond the regional lymph nodes.

13.23 *Cancers of the female genital tract*—carcinoma or sarcoma.

A. Uterus (corpus), as described in 1, 2, or 3:

1. Invading adjoining organs.

2. With metastases to or beyond the regional lymph nodes.

3. Persistent or recurrent following initial antineoplastic therapy.

OR

B. Uterine cervix, as described in 1 or 2:

1. Extending to the pelvic wall, lower portion of the vagina, or adjacent or distant organs.

2. Persistent or recurrent following initial antineoplastic therapy.

OR

C. Vulva or vagina, as described in 1, 2, or 3:

1. Invading adjoining organs.

2. With metastases to or beyond the regional lymph nodes.

3. Persistent or recurrent following initial antineoplastic therapy.

OR

D. Fallopian tubes, as described in 1 or 2:

1. Extending to the serosa or beyond.

2. Persistent or recurrent following initial antineoplastic therapy.

OR

E. Ovaries, as described in 1 or 2:

1. All tumors except germ cell tumors, with at least one of the following:

a. Tumor extension beyond the pelvis; for example, tumor implants on peritoneal, omental, or bowel surfaces.

b. Metastases to or beyond the regional lymph nodes.

c. Recurrent following initial antineoplastic therapy.

2. Germ-cell tumors—progressive or recurrent following initial antineoplastic therapy.

13.24 *Prostate gland*—carcinoma.

A. Progressive or recurrent despite initial hormonal intervention.

OR

B. With visceral metastases (metastases to internal organs).

13.25 *Testicles*—tumor with metastatic disease progressive or recurrent following initial chemotherapy.

13.26 *Penis*—carcinoma with metastases to or beyond the regional lymph nodes.

13.27 *Primary site unknown after appropriate search for primary*—metastatic carcinoma or sarcoma, except for squamous cell carcinoma confined to the neck nodes.

13.28 *Malignant neoplastic diseases treated by bone marrow or stem cell transplantation.* (*See* 13.00L.)

A. Allogeneic transplantation. Consider under a disability until at least 12 months from the date of transplantation. Thereafter, evaluate any residual impairment(s) under the criteria for the affected body system.

OR

B. Autologous transplantation. Consider under a disability until at least 12 months from the date of the first treatment under the treatment plan that includes transplantation. Thereafter, evaluate any residual impairment(s) under the criteria for the affected body system.

14.00 Immune System Disorders

A. *What disorders do we evaluate under the immune system disorders listings?*

1. *We evaluate immune system disorders that cause dysfunction in one or more components of your immune system.*

a. The dysfunction may be due to problems in antibody production, impaired cell-mediated immunity, a combined type of antibody/cellular deficiency, impaired phagocytosis, or complement deficiency.

b. Immune system disorders may result in recurrent and unusual infections, or inflammation and dysfunction of the body's own tissues. Immune system disorders can cause a deficit in a single organ or body system that results in extreme (that is, very serious) loss of function. They can also cause lesser degrees of limitations in two or more organs or body systems, and when associated with symptoms or signs, such as severe fatigue, fever, malaise, diffuse musculoskeletal pain, or involuntary weight loss, can also result in extreme limitation.

c. We organize the discussions of immune system disorders in three categories: Autoimmune disorders; Immune deficiency disorders, excluding human immunodeficiency virus (HIV) infection; and HIV infection.

2. *Autoimmune disorders (14.00D).* Autoimmune disorders are caused by dysfunctional immune responses directed against the body's own tissues, resulting in chronic, multisystem impairments that differ in clinical manifestations, course, and outcome. They are sometimes referred to as rheumatic diseases, connective tissue disorders, or collagen vascular disorders. Some of the features of autoimmune disorders in adults differ from the features of the same disorders in children.

3. *Immune deficiency disorders, excluding HIV infection (14.00E).* Immune deficiency disorders are characterized by recurrent or unusual infections that respond poorly to treatment, and are often associated with complications affecting other parts of the body. Immune deficiency disorders are classified as either *primary* (congenital) or *acquired*. Individuals with immune deficiency disorders also have an increased risk of malignancies and of having autoimmune disorders.

4. *Human immunodeficiency virus (HIV) infection (14.00F).* HIV infection may be characterized by increased susceptibility to opportunistic infections, cancers, or other conditions, as described in 14.08.

B. *What information do we need to show that you have an immune system disorder?* Generally, we need your medical history, a report(s) of a physical examination, a report(s) of laboratory findings, and in some instances, appropriate medically acceptable imaging or tissue biopsy reports to show that you have an immune system disorder. Therefore, we will make every reasonable effort to obtain your medical history, medical findings, and results of laboratory tests. We explain the information we need in more detail in the sections below.

C. Definitions

1. *Appropriate medically acceptable imaging* includes, but is not limited to, angiography, x-ray imaging, computerized axial tomography (CAT scan) or magnetic resonance imaging (MRI), with or without contrast material, myelography, and radionuclear bone scans. ''Appropriate'' means that the technique used is the proper one to support the evaluation and diagnosis of the impairment.

2. *Constitutional symptoms or signs*, as used in these listings, means severe fatigue, fever, malaise, or involuntary weight loss. *Severe fatigue* means a frequent sense of exhaustion that results in significantly reduced physical activity or mental function. *Malaise* means frequent feelings of illness, bodily discomfort, or lack of well-being that result in significantly reduced physical activity or mental function.

3. *Disseminated* means that a condition is spread over a considerable area. The type and extent of the spread will depend on your specific disease.

4. *Dysfunction* means that one or more of the body regulatory mechanisms are impaired, causing either an excess or deficiency of immunocompetent cells or their products.

5. *Extra-articular* means ''other than the joints''; for example, an organ(s) such as the heart, lungs, kidneys, or skin.

6. *Inability to ambulate effectively* has the same meaning as in 1.00B2b.

7. *Inability to perform fine and gross movements effectively* has the same meaning as in 1.00B2c.

8. *Major peripheral joints* has the same meaning as in 1.00F.

9. *Persistent* means that a sign(s) or symptom(s) has continued over time. The precise meaning will depend on the specific immune system disorder, the usual course of the disorder, and the other circumstances of your clinical course.

10. *Recurrent* means that a condition that previously responded adequately to an appropriate course of treatment returns after a period of remission or regression. The precise meaning, such as the extent of response or remission and the time periods involved, will depend on the specific disease or condition you have, the body system affected, the usual course of the disorder and its treatment, and the other facts of your particular case.

11. *Resistant to treatment* means that a condition did not respond adequately to an appropriate course of treatment. Whether a response is adequate or a course of treatment is appropriate will depend on the specific disease or condition you have, the body system affected, the usual course of the disorder and its treatment, and the other facts of your particular case.

12. *Severe* means medical severity as used by the medical community. The term does not have the same meaning as it does when we use it in connection with a finding at the second step of the sequential evaluation processes in §§ 404.1520, 416.920, and 416.924.

D. How do we document and evaluate the listed autoimmune disorders?

1. *Systemic lupus erythematosus (14.02).*

a. *General.* Systemic lupus erythematosus (SLE) is a chronic inflammatory disease that can affect any organ or body system. It is frequently, but not always, accompanied by constitutional symptoms or signs (severe fatigue, fever, malaise, involuntary weight loss). Major organ or body system involvement can include: Respiratory (pleuritis, pneumonitis), cardiovascular (endocarditis, myocarditis, pericarditis, vasculitis), renal (glomerulonephritis), hematologic (anemia, leukopenia, thrombocytopenia), skin (photosensitivity), neurologic (seizures), mental (anxiety, fluctuating cognition (''lupus fog''), mood disorders, organic brain syndrome, psychosis), or immune system disorders (inflammatory arthritis). Immunologically, there is an array of circulating serum auto-antibodies and pro- and anti-coagulant proteins that may occur in a highly variable pattern.

b. *Documentation of SLE.* Generally, but not always, the medical evidence will show that your SLE satisfies the criteria in the current ''Criteria for the Classification of Systemic Lupus Erythematosus'' by the American College of Rheumatology found in the most recent edition of the *Primer on the Rheumatic Diseases* published by the Arthritis Foundation.

2. *Systemic vasculitis (14.03).*

a. *General.*

(i) Vasculitis is an inflammation of blood vessels. It may occur acutely in association with adverse drug reactions, certain chronic infections, and occasionally, malignancies. More often, it is chronic and the cause is unknown. Symptoms vary depending on which blood vessels are involved. Systemic vasculitis may also be associated with other autoimmune disorders; for example, SLE or dermatomyositis.

(ii) There are several clinical patterns, including but not limited to polyarteritis

nodosa, Takayasu's arteritis (aortic arch arteritis), giant cell arteritis (temporal arteritis), and Wegener's granulomatosis.

b. *Documentation of systemic vasculitis.* Angiography or tissue biopsy confirms a diagnosis of systemic vasculitis when the disease is suspected clinically. When you have had angiography or tissue biopsy for systemic vasculitis, we will make every reasonable effort to obtain reports of the results of that procedure. However, we will not purchase angiography or tissue biopsy.

3. *Systemic sclerosis (scleroderma) (14.04).*

a. *General.* Systemic sclerosis (scleroderma) constitutes a spectrum of disease in which thickening of the skin is the clinical hallmark. Raynaud's phenomenon, often medically severe and progressive, is present frequently and may be the peripheral manifestation of a vasospastic abnormality in the heart, lungs, and kidneys. The CREST syndrome (calcinosis, Raynaud's phenomenon, esophageal dysmotility, sclerodactyly, and telangiectasia) is a variant that may slowly progress over years to the generalized process, systemic sclerosis.

b. *Diffuse cutaneous systemic sclerosis.* In diffuse cutaneous systemic sclerosis (also known as diffuse scleroderma), major organ or systemic involvement can include the gastrointestinal tract, lungs, heart, kidneys, and muscle in addition to skin or blood vessels. Although arthritis can occur, joint dysfunction results primarily from soft tissue/cutaneous thickening, fibrosis, and contractures.

c. *Localized scleroderma (linear scleroderma and morphea).*

(i) Localized scleroderma (linear scleroderma and morphea) is more common in children than in adults. However, this type of scleroderma can persist into adulthood. To assess the severity of the impairment, we need a description of the extent of involvement of linear scleroderma and the location of the lesions. For example, linear scleroderma involving the arm but not crossing any joints is not as functionally limiting as sclerodactyly (scleroderma localized to the fingers). Linear scleroderma of a lower extremity involving skin thickening and atrophy of underlying muscle or bone can result in contractures and leg length discrepancy. In such cases, we may evaluate your impairment under the musculoskeletal listings (1.00).

(ii) When there is isolated morphea of the face causing facial disfigurement from unilateral hypoplasia of the mandible, maxilla, zygoma, or orbit, adjudication may be more appropriate under the criteria in the affected body system, such as special senses and speech (2.00) or mental disorders (12.00).

(iii) Chronic variants of these syndromes include disseminated morphea, Shulman's disease (diffuse fasciitis with eosinophilia), and eosinophilia-myalgia syndrome (often associated with toxins such as toxic oil or contaminated tryptophan), all of which can impose medically severe musculoskeletal dysfunction and may also lead to restrictive pulmonary disease. We evaluate these variants of the disease under the criteria in the musculoskeletal listings (1.00) or respiratory system listings (3.00).

d. *Documentation of systemic sclerosis (scleroderma).* Documentation involves differentiating the clinical features of systemic sclerosis (scleroderma) from other autoimmune disorders. However, there may be an overlap.

4. *Polymyositis and dermatomyositis (14.05).*

a. *General.* Polymyositis and dermatomyositis are related disorders that are characterized by an inflammatory process in striated muscle, occurring alone or in association with other autoimmune disorders or malignancy. The most common manifestations are symmetric weakness, and less frequently, pain and tenderness of the proximal limb-girdle (shoulder or pelvic) musculature. There may also be involvement of the cervical, cricopharyngeal, esophageal, intercostal, and diaphragmatic muscles.

b. *Documentation of polymyositis and dermatomyositis.* Generally, but not always, polymyositis is associated with elevated serum muscle enzymes (creatine phosphokinase (CPK), aminotransferases, and aldolase), and characteristic abnormalities on electromyography and muscle biopsy. In dermatomyositis there are characteristic skin findings in addition to the findings of polymyositis. When you have had electromyography or muscle biopsy for polymyositis or dermatomyositis, we will make every reasonable effort to obtain reports of the results of that procedure. However, we will not purchase electromyography or muscle biopsy.

c. *Additional information about how we evaluate polymyositis and dermatomyositis under the listings.*

(i) Weakness of your pelvic girdle muscles that results in your inability to rise independently from a squatting or sitting position or to climb stairs may be an indication that you are unable to ambulate effectively. Weakness of your shoulder girdle muscles may result in your inability to perform lifting, carrying, and reaching overhead, and also may seriously affect your ability to perform activities requiring fine movements. We evaluate these limitations under 14.05A.

(ii) We use the malignant neoplastic diseases listings (13.00) to evaluate malignancies associated with polymyositis or dermatomyositis. We evaluate the involvement of other organs/body systems under the criteria for the listings in the affected body system.

5. *Undifferentiated and mixed connective tissue disease (14.06).*

a. *General.* This listing includes syndromes with clinical and immunologic features of several autoimmune disorders, but which do not satisfy the criteria for any of the specific disorders described. For example, you may have clinical features of SLE and systemic vasculitis, and the serologic (blood test) findings of rheumatoid arthritis.

b. *Documentation of undifferentiated and mixed connective tissue disease.* Undifferentiated connective tissue disease is diagnosed when clinical features and serologic (blood test) findings, such as rheumatoid factor or antinuclear antibody (consistent with an autoimmune disorder) are present but do not satisfy the criteria for a specific disease. Mixed connective tissue disease (MCTD) is diagnosed when clinical features and serologic findings of two or more autoimmune diseases overlap.

6. *Inflammatory arthritis (14.09).*

a. *General.* The spectrum of inflammatory arthritis includes a vast array of disorders that differ in cause, course, and outcome. Clinically, inflammation of major peripheral joints may be the dominant manifestation causing difficulties with ambulation or fine and gross movements; there may be joint pain, swelling, and tenderness. The arthritis may affect other joints, or cause less limitation in ambulation or the performance of fine and gross movements. However, in combination with extra-articular features, including constitutional symptoms or signs (severe fatigue, fever, malaise, involuntary weight loss), inflammatory arthritis may result in an extreme limitation.

b. *Inflammatory arthritis involving the axial spine (spondyloarthropathy).* In adults, inflammatory arthritis involving the axial spine may be associated with disorders such as:

(i) Reiter's syndrome;

(ii) Ankylosing spondylitis;

(iii) Psoriatic arthritis;

(iv) Whipple's disease;

(v) Behçet's disease; and

(vi) Inflammatory bowel disease.

c. *Inflammatory arthritis involving the peripheral joints.* In adults, inflammatory arthritis involving peripheral joints may be associated with disorders such as:

(i) Rheumatoid arthritis;

(ii) Sjögren's syndrome;

(iii) Psoriatic arthritis;

(iv) Crystal deposition disorders (gout and pseudogout);

(v) Lyme disease; and

(vi) Inflammatory bowel disease.

d. *Documentation of inflammatory arthritis.* Generally, but not always, the diagnosis of inflammatory arthritis is based on the clinical features and serologic findings described in the most recent edition of the Primer on the Rheumatic Diseases published by the Arthritis Foundation.

e. *How we evaluate inflammatory arthritis under the listings.*

(i) Listing-level severity in 14.09A and 14.09C1 is shown by an impairment that results in an ''extreme'' (very serious) limitation. In 14.09A, the criterion is satisfied with persistent inflammation or deformity in one major peripheral weight-bearing joint resulting in the inability to ambulate effectively (as defined in 14.00C6) or one major peripheral joint in each upper extremity resulting in the inability to perform fine and gross movements effectively (as defined in 14.00C7). In 14.09C1, if you have the required ankylosis (fixation) of your cervical or dorsolumbar spine, we will find that you have an extreme limitation in your ability to see in front of you, above you, and to the side. Therefore, inability to ambulate effectively is implicit in 14.09C1, even though you might not require bilateral upper limb assistance.

(ii) Listing-level severity is shown in 14.09B, 14.09C2, and 14.09D by inflammatory arthritis that involves various combinations of complications of one or more major peripheral joints or other joints, such as inflammation or deformity, extra-articular features, repeated manifestations, and constitutional symptoms or signs. Extra-articular impairments may also meet listings in other body systems.

(iii) Extra-articular features of inflammatory arthritis may involve any body system; for example: Musculoskeletal (heel enthesopathy), ophthalmologic (iridocyclitis, keratoconjunctivitis sicca, uveitis), pulmonary (pleuritis, pulmonary fibrosis or nodules, restrictive lung disease), cardiovascular (aortic valve insufficiency, arrhythmias, coronary arteritis, myocarditis, pericarditis, Raynaud's phenomenon, systemic vasculitis), renal (amyloidosis of the kidney), hematologic (chronic anemia, thrombocytopenia), neurologic (peripheral neuropathy, radiculopathy, spinal cord or cauda equina compression with sensory and motor loss), mental (cognitive dysfunction, poor memory), and immune system (Felty's syndrome (hypersplenism with compromised immune competence)).

(iv) If both inflammation and chronic deformities are present, we evaluate your impairment under the criteria of any appropriate listing.

7. *Sjögren's syndrome (14.10).*

a. *General.*

(i) Sjögren's syndrome is an immune-mediated disorder of the exocrine glands. Involvement of the lacrimal and salivary glands is the hallmark feature, resulting in symptoms of dry eyes and dry mouth, and possible complications, such as corneal damage, blepharitis (eyelid inflammation), dysphagia (difficulty in swallowing), dental caries, and the inability to speak for extended periods of time. Involvement of the exocrine glands of

the upper airways may result in persistent dry cough.

(ii) Many other organ systems may be involved, including musculoskeletal (arthritis, myositis), respiratory (interstitial fibrosis), gastrointestinal (dysmotility, dysphagia, involuntary weight loss), genitourinary (interstitial cystitis, renal tubular acidosis), skin (purpura, vasculitis), neurologic (central nervous system disorders, cranial and peripheral neuropathies), mental (cognitive dysfunction, poor memory), and neoplastic (lymphoma). Severe fatigue and malaise are frequently reported. Sjögren's syndrome may be associated with other autoimmune disorders (for example, rheumatoid arthritis or SLE); usually the clinical features of the associated disorder predominate.

b. *Documentation of Sjögren's syndrome.* If you have Sjögren's syndrome, the medical evidence will generally, but not always, show that your disease satisfies the criteria in the current ''Criteria for the Classification of Sjögren's Syndrome'' by the American College of Rheumatology found in the most recent edition of the *Primer on the Rheumatic Diseases* published by the Arthritis Foundation.

E. How do we document and evaluate immune deficiency disorders, excluding HIV infection?

1. *General.*

a. Immune deficiency disorders can be classified as:

(i) *Primary* (congenital); for example, X-linked agammaglobulinemia, thymic hypoplasia (DiGeorge syndrome), severe combined immunodeficiency (SCID), chronic granulomatous disease (CGD), C1 esterase inhibitor deficiency.

(ii) *Acquired;* for example, medication-related.

b. Primary immune deficiency disorders are seen mainly in children. However, recent advances in the treatment of these disorders have allowed many affected children to survive well into adulthood. Occasionally, these disorders are first diagnosed in adolescence or adulthood.

2. *Documentation of immune deficiency disorders.* The medical evidence must include documentation of the specific type of immune deficiency. Documentation may be by laboratory evidence or by other generally acceptable methods consistent with the prevailing state of medical knowledge and clinical practice.

3. *Immune deficiency disorders treated by stem cell transplantation.*

a. *Evaluation in the first 12 months.* If you undergo stem cell transplantation for your immune deficiency disorder, we will consider you disabled until at least 12 months from the date of the transplant.

b. *Evaluation after the 12-month period has elapsed.* After the 12-month period has elapsed, we will consider any residuals of your immune deficiency disorder as well as any residual impairment(s) resulting from the treatment, such as complications arising from:

(i) Graft-versus-host (GVH) disease.

(ii) Immunosuppressant therapy, such as frequent infections.

(iii) Significant deterioration of other organ systems.

4. *Medication-induced immune suppression.* Medication effects can result in varying degrees of immune suppression, but most resolve when the medication is ceased. However, if you are prescribed medication for long-term immune suppression, such as after an organ transplant, we will evaluate:

a. The frequency and severity of infections.

b. Residuals from the organ transplant itself, after the 12-month period has elapsed.

c. Significant deterioration of other organ systems.

F. How do we document and evaluate human immunodeficiency virus (HIV) infection?

Any individual with HIV infection, including one with a diagnosis of acquired immune deficiency syndrome (AIDS), may be found disabled under 14.08 if his or her impairment meets the criteria in that listing or is medically equivalent to the criteria in that listing.

1. *Documentation of HIV infection.* The medical evidence must include documentation of HIV infection. Documentation may be by laboratory evidence or by other generally acceptable methods consistent with the prevailing state of medical knowledge and clinical practice. When you have had laboratory testing for HIV infection, we will make every reasonable effort to obtain reports of the results of that testing. However, we will not purchase laboratory testing to establish whether you have HIV infection.

a. *Definitive documentation of HIV infection.* A definitive diagnosis of HIV infection is documented by one or more of the following laboratory tests:

(i) HIV antibody tests. HIV antibodies are usually first detected by an ELISA screening test performed on serum. Because the ELISA can yield false positive results, confirmation is required using a more definitive test, such as a Western blot or an immunofluorescence assay.

(ii) Positive ''viral load'' (VL) tests. These tests are normally used to quantitate the amount of the virus present but also document HIV infection. Such tests include the quantitative plasma HIV RNA, quantitative plasma HIV branched DNA, and reverse transcriptase-polymerase chain reaction (RT-PCR).

(iii) HIV DNA detection by polymerase chain reaction (PCR).

(iv) A specimen that contains HIV antigen (for example, serum specimen, lymphocyte culture, or cerebrospinal fluid).

(v) A positive viral culture for HIV from peripheral blood mononuclear cells (PBMC).

(vi) Other tests that are highly specific for detection of HIV and that are consistent with the prevailing state of medical knowledge.

b. *Other acceptable documentation of HIV infection.* We may also document HIV infection without the definitive laboratory evidence described in 14.00F1a, provided that such documentation is consistent with the prevailing state of medical knowledge and clinical practice and is consistent with the other evidence in your case record. If no definitive laboratory evidence is available, we may document HIV infection by the medical history, clinical and laboratory findings, and diagnosis(es) indicated in the medical evidence. For example, we will accept a diagnosis of HIV infection without definitive laboratory evidence of the HIV infection if you have an opportunistic disease that is predictive of a defect in cell-mediated immunity (for example, toxoplasmosis of the brain, *Pneumocystis* pneumonia (PCP)), and there is no other known cause of diminished resistance to that disease (for example, long-term steroid treatment, lymphoma). In such cases, we will make every reasonable effort to obtain full details of the history, medical findings, and results of testing.

2. *CD4 tests.* Individuals who have HIV infection or other disorders of the immune system may have tests showing a reduction of either the absolute count or the percentage of their T-helper lymphocytes (CD4 cells). The extent of immune suppression correlates with the level or rate of decline of the CD4 count. Generally, when the CD4 count is below 200/mm^3 (or below 14 percent of the total lymphocyte count) the susceptibility to opportunistic infection is greatly increased. Although a reduced CD4 count alone does not establish a definitive diagnosis of HIV infection, a CD4 count below 200 does offer supportive evidence when there are clinical findings, but not a definitive diagnosis of an opportunistic infection(s). However, a reduced CD4 count alone does not document the severity or functional consequences of HIV infection.

3. *Documentation of the manifestations of HIV infection.* The medical evidence must also include documentation of the manifestations of HIV infection. Documentation may be by laboratory evidence or other generally acceptable methods consistent with the prevailing state of medical knowledge and clinical practice.

a. *Definitive documentation of the manifestations of HIV infection.* The definitive method of diagnosing opportunistic diseases or conditions that are manifestations of HIV infection is by culture, serologic test, or microscopic examination of biopsied tissue or other material (for example, bronchial washings). We will make every reasonable effort to obtain specific laboratory evidence of an opportunistic disease or other condition whenever this information is available. If a histologic or other test has been performed, the evidence should include a copy of the appropriate report. If we cannot obtain the report, the summary of hospitalization or a report from the treating source should include details of the findings and results of the diagnostic studies (including appropriate medically acceptable imaging studies) or microscopic examination of the appropriate tissues or body fluids.

b. *Other acceptable documentation of the manifestations of HIV infection.* We may also document manifestations of HIV infection without the definitive laboratory evidence described in 14.00F3a, provided that such documentation is consistent with the prevailing state of medical knowledge and clinical practice and is consistent with the other evidence in your case record. For example, many conditions are now commonly diagnosed based on some or all of the following: Medical history, clinical manifestations, laboratory findings (including appropriate medically acceptable imaging), and treatment responses. In such cases, we will make every reasonable effort to obtain full details of the history, medical findings, and results of testing. The following are examples of how we may document manifestations of HIV infection with other appropriate evidence.

(i) Although a definitive diagnosis of PCP requires identifying the organism in bronchial washings, induced sputum, or lung biopsy, these tests are frequently bypassed if PCP can be diagnosed presumptively. Supportive evidence may include: Fever, dyspnea, hypoxia, CD4 count below 200, and no evidence of bacterial pneumonia. Also supportive are bilateral lung interstitial infiltrates on x-ray, a typical pattern on CAT scan, or a gallium scan positive for pulmonary uptake. Response to anti-PCP therapy usually requires 5–7 days, and such a response can be supportive of the diagnosis.

(ii) Documentation of *Cytomegalovirus* (CMV) disease (14.08D) may present special problems because definitive diagnosis (except for chorioretinitis, which may be diagnosed by an ophthalmologist or optometrist on funduscopic examination) requires identification of viral inclusion bodies or a positive culture from the affected organ and the absence of any other infectious agent likely to be causing the disease. A positive serology test does not establish a definitive diagnosis of CMV disease, but does offer supportive evidence of a presumptive diagnosis of CMV disease. Other clinical findings that support a presumptive diagnosis of CMV may include: Fever, urinary culture positive for CMV, and CD4 count below 200. A clear response to anti-CMV therapy also supports a diagnosis.

(iii) A definitive diagnosis of toxoplasmosis of the brain is based on brain biopsy, but this procedure carries significant risk and is not commonly performed. This condition is usually diagnosed presumptively based on symptoms or signs of fever, headache, focal neurologic deficits, seizures, typical lesions on brain imaging, and a positive serology test.

(iv) Candidiasis of the esophagus (also known as *Candida* esophagitis) may be presumptively diagnosed based on symptoms of retrosternal pain on swallowing (odynophagia) and either oropharyngeal thrush (white patches or plaques) diagnosed on physical examination or by microscopic documentation of *Candida* fungal elements from a noncultured specimen scraped from the oral mucosa. Treatment with oral (systemic) antifungal agents usually produces improvement after 5 or more days of therapy, and such a response can be supportive of the diagnosis.

4. *HIV infection manifestations specific to women.*

a. *General.* Most women with severe immunosuppression secondary to HIV infection exhibit the typical opportunistic infections and other conditions, such as PCP, *Candida* esophagitis, wasting syndrome, cryptococcosis, and toxoplasmosis. However, HIV infection may have different manifestations in women than in men. Adjudicators must carefully scrutinize the medical evidence and be alert to the variety of medical conditions specific to, or common in, women with HIV infection that may affect their ability to function in the workplace.

b. *Additional considerations for evaluating HIV infection in women.* Many of these manifestations (for example, vulvovaginal candidiasis, pelvic inflammatory disease) occur in women with or without HIV infection, but can be more severe or resistant to treatment, or occur more frequently in a woman whose immune system is suppressed. Therefore, when evaluating the claim of a woman with HIV infection, it is important to consider gynecologic and other problems specific to women, including any associated symptoms (for example, pelvic pain), in assessing the severity of the impairment and resulting functional limitations. We may evaluate manifestations of HIV infection in women under the specific criteria (for example, cervical cancer under 14.08E), under an applicable general category (for example, pelvic inflammatory disease under 14.08A4) or, in appropriate cases, under 14.08K.

5. *Involuntary weight loss.* For purposes of 14.08H, an involuntary weight loss of at least 10 percent of baseline is always considered ''significant.'' Loss of less than 10 percent may or may not be significant, depending on the individual's baseline weight and body habitus. For example, a 7-pound weight loss in a 100-pound woman who is 63 inches tall might be considered significant; but a 14-pound weight loss in a 200-pound woman who is the same height might not be significant. HIV infection that affects the digestive system and results in malnutrition can also be evaluated under 5.08.

G. How do we consider the effects of treatment in evaluating your autoimmune disorder, immune deficiency disorder, or HIV infection?

1. *General.* If your impairment does not otherwise meet the requirements of a listing, we will consider your medical treatment in terms of its effectiveness in improving the signs, symptoms, and laboratory abnormalities of your specific immune system disorder or its manifestations, and in terms of any side effects that limit your functioning. We will make every reasonable effort to obtain a specific description of the treatment you receive (including surgery) for your immune system disorder. We consider:

a. The effects of medications you take.

b. Adverse side effects (acute and chronic).

c. The intrusiveness and complexity of your treatment (for example, the dosing schedule, need for injections).

d. The effect of treatment on your mental functioning (for example, cognitive changes, mood disturbance).

e. Variability of your response to treatment (see 14.00G2).

f. The interactive and cumulative effects of your treatments. For example, many individuals with immune system disorders receive treatment both for their immune system disorders and for the manifestations of the disorders or co-occurring impairments, such as treatment for HIV infection and hepatitis C. The interactive and cumulative effects of these treatments may be greater than the effects of each treatment considered separately.

g. The duration of your treatment.

h. Any other aspects of treatment that may interfere with your ability to function.

2. *Variability of your response to treatment.* Your response to treatment and the adverse or beneficial consequences of your treatment may vary widely. The effects of your treatment may be temporary or long term. For example, some individuals may show an initial positive response to a drug or combination of drugs followed by a decrease in effectiveness. When we evaluate your response to treatment and how your treatment may affect you, we consider such factors as disease activity before treatment, requirements for changes in therapeutic regimens, the time required for therapeutic effectiveness of a particular drug or drugs, the limited number of drug combinations that may be available for your impairment(s), and the time-limited efficacy of some drugs. For example, an individual with HIV infection or another immune deficiency disorder who develops pneumonia or tuberculosis may not respond to

the same antibiotic regimen used in treating individuals without HIV infection or another immune deficiency disorder, or may not respond to an antibiotic that he or she responded to before. Therefore, we must consider the effects of your treatment on an individual basis, including the effects of your treatment on your ability to function.

3. *How we evaluate the effects of treatment for autoimmune disorders on your ability to function.* Some medications may have acute or long-term side effects. When we consider the effects of corticosteroids or other treatments for autoimmune disorders on your ability to function, we consider the factors in 14.00G1 and 14.00G2. Long-term corticosteroid treatment can cause ischemic necrosis of bone, posterior subcapsular cataract, weight gain, glucose intolerance, increased susceptibility to infection, and osteoporosis that may result in a loss of function. In addition, medications used in the treatment of autoimmune disorders may also have effects on mental functioning, including cognition (for example, memory), concentration, and mood.

4. *How we evaluate the effects of treatment for immune deficiency disorders, excluding HIV infection, on your ability to function.* When we consider the effects of your treatment for your immune deficiency disorder on your ability to function, we consider the factors in 14.00G1 and 14.00G2. A frequent need for treatment such as intravenous immunoglobulin and gamma interferon therapy can be intrusive and interfere with your ability to work. We will also consider whether you have chronic side effects from these or other medications, including severe fatigue, fever, headaches, high blood pressure, joint swelling, muscle aches, nausea, shortness of breath, or limitations in mental function including cognition (for example, memory), concentration, and mood.

5. *How we evaluate the effects of treatment for HIV infection on your ability to function.*

a. *General.* When we consider the effects of antiretroviral drugs (including the effects of highly active antiretroviral therapy (HAART)) and the effects of treatments for the manifestations of HIV infection on your ability to function, we consider the factors in 14.00G1 and 14.00G2. Side effects of antiretroviral drugs include, but are not limited to: Bone marrow suppression, pancreatitis, gastrointestinal intolerance (nausea, vomiting, diarrhea), neuropathy, rash, hepatotoxicity, lipodystrophy (fat redistribution, such as ''buffalo hump''), glucose intolerance, and lactic acidosis. In addition, medications used in the treatment of HIV infection may also have effects on mental functioning, including cognition (for example, memory), concentration, and mood, and may result in malaise, severe fatigue, joint and muscle pain, and insomnia. The symptoms of HIV infection and the side effects of medication may be indistinguishable from each other. We will consider all of your functional limitations, whether they result from your symptoms or signs of HIV infection or the side effects of your treatment.

b. *Structured treatment interruptions.* A structured treatment interruption (STI, also called a ''drug holiday'') is a treatment practice during which your treating source advises you to stop taking your medications temporarily. An STI in itself does not imply that your medical condition has improved; nor does it imply that you are noncompliant with your treatment because you are following your treating source's advice. Therefore, if you have stopped taking medication because your treating source prescribed or recommended an STI, we will not find that you are failing to follow treatment or draw inferences about the severity of your impairment on this fact alone. We will consider why your treating source has prescribed or recommended an STI and all the other information in your case record when we determine the severity of your impairment.

6. *When there is no record of ongoing treatment.* If you have not received ongoing treatment or have not had an ongoing relationship with the medical community despite the existence of a severe impairment(s), we will evaluate the medical severity and duration of your immune system disorder on the basis of the current objective medical evidence and other evidence in your case record, taking into consideration your medical history, symptoms, clinical and laboratory findings, and medical source opinions. If you have just begun treatment and we cannot determine whether you are disabled based on the evidence we have, we may need to wait to determine the effect of the treatment on your ability to function. The amount of time we need to wait will depend on the facts of your case. If you have not received treatment, you may not be able to show an impairment that meets the criteria of one of the immune system disorders listings, but your immune system disorder may medically equal a listing or be disabling based on a consideration of your residual functional capacity, age, education, and work experience.

H. How do we consider your symptoms, including your pain, severe fatigue, and malaise?

Your symptoms, including pain, severe fatigue, and malaise, may be important factors in our determination whether your immune system disorder(s) meets or medically equals a listing or in our determination whether you are otherwise able to work. In order for us to consider your symptoms, you must have medical signs or laboratory findings showing the existence of a medically determinable impairment(s) that could reasonably be expected to produce the symptoms. If you have such an impairment(s), we will

evaluate the intensity, persistence, and functional effects of your symptoms using the rules throughout 14.00 and in our other regulations. See §§404.1528, 404.1529, 416.928, and 416.929. Additionally, when we assess the credibility of your complaints about your symptoms and their functional effects, we will not draw any inferences from the fact that you do not receive treatment or that you are not following treatment without considering all of the relevant evidence in your case record, including any explanations you provide that may explain why you are not receiving or following treatment.

I. How do we use the functional criteria in these listings?

1. The following listings in this body system include standards for evaluating the functional limitations resulting from immune system disorders: 14.02B, for systemic lupus erythematosus; 14.03B, for systemic vasculitis; 14.04D, for systemic sclerosis (scleroderma); 14.05E, for polymyositis and dermatomyositis; 14.06B, for undifferentiated and mixed connective tissue disease; 14.07C, for immune deficiency disorders, excluding HIV infection; 14.08K, for HIV infection; 14.09D, for inflammatory arthritis; and 14.10B, for Sjögren's syndrome.

2. When we use one of the listings cited in 14.00I1, we will consider all relevant information in your case record to determine the full impact of your immune system disorder on your ability to function on a sustained basis. Important factors we will consider when we evaluate your functioning under these listings include, but are not limited to: Your symptoms, the frequency and duration of manifestations of your immune system disorder, periods of exacerbation and remission, and the functional impact of your treatment, including the side effects of your medication.

3. As used in these listings, ''repeated'' means that the manifestations occur on an average of three times a year, or once every 4 months, each lasting 2 weeks or more; or the manifestations do not last for 2 weeks but occur substantially more frequently than three times in a year or once every 4 months; or they occur less frequently than an average of three times a year or once every 4 months but last substantially longer than 2 weeks. Your impairment will satisfy this criterion regardless of whether you have the same kind of manifestation repeatedly, all different manifestations, or any other combination of manifestations; for example, two of the same kind of manifestation and a different one. You must have the required number of manifestations with the frequency and duration required in this section. Also, the manifestations must occur within the period covered by your claim.

4. To satisfy the functional criterion in a listing, your immune system disorder must result in a ''marked'' level of limitation in one of three general areas of functioning: Activities of daily living, social functioning, or difficulties in completing tasks due to deficiencies in concentration, persistence, or pace. Functional limitation may result from the impact of the disease process itself on your mental functioning, physical functioning, or both your mental and physical functioning. This could result from persistent or intermittent symptoms, such as depression, severe fatigue, or pain, resulting in a limitation of your ability to do a task, to concentrate, to persevere at a task, or to perform the task at an acceptable rate of speed. You may also have limitations because of your treatment and its side effects (see 14.00G).

5. When ''marked'' is used as a standard for measuring the degree of functional limitation, it means more than moderate but less than extreme. We do not define ''marked'' by a specific number of different activities of daily living in which your functioning is impaired, different behaviors in which your social functioning is impaired, or tasks that you are able to complete, but by the nature and overall degree of interference with your functioning. You may have a marked limitation when several activities or functions are impaired, or even when only one is impaired. Also, you need not be totally precluded from performing an activity to have a marked limitation, as long as the degree of limitation seriously interferes with your ability to function independently, appropriately, and effectively. The term ''marked'' does not imply that you must be confined to bed, hospitalized, or in a nursing home.

6. *Activities of daily living* include, but are not limited to, such activities as doing household chores, grooming and hygiene, using a post office, taking public transportation, or paying bills. We will find that you have a ''marked'' limitation of activities of daily living if you have a serious limitation in your ability to maintain a household or take public transportation because of symptoms, such as pain, severe fatigue, anxiety, or difficulty concentrating, caused by your immune system disorder (including manifestations of the disorder) or its treatment, even if you are able to perform some self-care activities.

7. *Social functioning* includes the capacity to interact independently, appropriately, effectively, and on a sustained basis with others. It includes the ability to communicate effectively with others. We will find that you have a ''marked'' limitation in maintaining social functioning if you have a serious limitation in social interaction on a sustained basis because of symptoms, such as pain, severe fatigue, anxiety, or difficulty concentrating, or a pattern of exacerbation and remission, caused by your immune system disorder (including manifestations of the disorder) or its treatment, even if you are able

to communicate with close friends or relatives.

8. *Completing tasks in a timely manner* involves the ability to sustain concentration, persistence, or pace to permit timely completion of tasks commonly found in work settings. We will find that you have a ''marked'' limitation in completing tasks if you have a serious limitation in your ability to sustain concentration or pace adequate to complete work-related tasks because of symptoms, such as pain, severe fatigue, anxiety, or difficulty concentrating, caused by your immune system disorder (including manifestations of the disorder) or its treatment, even if you are able to do some routine activities of daily living.

J. How do we evaluate your immune system disorder when it does not meet one of these listings?

1. These listings are only examples of immune system disorders that we consider severe enough to prevent you from doing any gainful activity. If your impairment(s) does not meet the criteria of any of these listings, we must also consider whether you have an impairment(s) that satisfies the criteria of a listing in another body system.

2. Individuals with immune system disorders, including HIV infection, may manifest signs or symptoms of a mental impairment or of another physical impairment. We may evaluate these impairments under any affected body system. For example, we will evaluate:

a. Musculoskeletal involvement, such as surgical reconstruction of a joint, under 1.00.

b. Ocular involvement, such as dry eye, under 2.00.

c. Respiratory impairments, such as pleuritis, under 3.00.

d. Cardiovascular impairments, such as cardiomyopathy, under 4.00.

e. Digestive impairments, such as hepatitis (including hepatitis C) or weight loss as a result of HIV infection that affects the digestive system, under 5.00.

f. Genitourinary impairments, such as nephropathy, under 6.00.

g. Hematologic abnormalities, such as anemia, granulocytopenia, and thrombocytopenia, under 7.00.

h. Skin impairments, such as persistent fungal and other infectious skin eruptions, and photosensitivity, under 8.00.

i. Neurologic impairments, such as neuropathy or seizures, under 11.00.

j. Mental disorders, such as depression, anxiety, or cognitive deficits, under 12.00.

k. Allergic disorders, such as asthma or atopic dermatitis, under 3.00 or 8.00 or under the criteria in another affected body system.

l. Syphilis or neurosyphilis under the criteria for the affected body system; for example, 2.00 Special senses and speech, 4.00 Cardiovascular system, or 11.00 Neurological.

3. If you have a severe medically determinable impairment(s) that does not meet a listing, we will determine whether your impairment(s) medically equals a listing. (See §§ 404.1526 and 416.926.) If it does not, you may or may not have the residual functional capacity to engage in substantial gainful activity. Therefore, we proceed to the fourth, and if necessary, the fifth steps of the sequential evaluation process in §§ 404.1520 and 416.920. We use the rules in §§ 404.1594, 416.994, and 416.994a as appropriate, when we decide whether you continue to be disabled.

14.01 *Category of Impairments, Immune System Disorders.*

14.02 *Systemic lupus erythematosus.* As described in 14.00D1. With:

A. Involvement of two or more organs/body systems, with:

1. One of the organs/body systems involved to at least a moderate level of severity; and

2. At least two of the constitutional symptoms or signs (severe fatigue, fever, malaise, or involuntary weight loss).

or

B. Repeated manifestations of SLE, with at least two of the constitutional symptoms or signs (severe fatigue, fever, malaise, or involuntary weight loss) and one of the following at the marked level:

1. Limitation of activities of daily living.

2. Limitation in maintaining social functioning.

3. Limitation in completing tasks in a timely manner due to deficiencies in concentration, persistence, or pace.

14.03 *Systemic vasculitis.* As described in 14.00D2. With:

A. Involvement of two or more organs/body systems, with:

1. One of the organs/body systems involved to at least a moderate level of severity; and

2. At least two of the constitutional symptoms or signs (severe fatigue, fever, malaise, or involuntary weight loss).

or

B. Repeated manifestations of systemic vasculitis, with at least two of the constitutional symptoms or signs (severe fatigue, fever, malaise, or involuntary weight loss) and one of the following at the marked level:

1. Limitation of activities of daily living.

2. Limitation in maintaining social functioning.

3. Limitation in completing tasks in a timely manner due to deficiencies in concentration, persistence, or pace.

14.04 *Systemic sclerosis (scleroderma).* As described in 14.00D3. With:

A. Involvement of two or more organs/body systems, with:

1. One of the organs/body systems involved to at least a moderate level of severity; and

2. At least two of the constitutional symptoms or signs (severe fatigue, fever, malaise, or involuntary weight loss).

or

B. With one of the following:

1. Toe contractures or fixed deformity of one or both feet, resulting in the inability to ambulate effectively as defined in 14.00C6; or

2. Finger contractures or fixed deformity in both hands, resulting in the inability to perform fine and gross movements effectively as defined in 14.00C7; or

3. Atrophy with irreversible damage in one or both lower extremities, resulting in the inability to ambulate effectively as defined in 14.00C6; or

4. Atrophy with irreversible damage in both upper extremities, resulting in the inability to perform fine and gross movements effectively as defined in 14.00C7.

or

C. Raynaud's phenomenon, characterized by:

1. Gangrene involving at least two extremities; or

2. Ischemia with ulcerations of toes or fingers, resulting in the inability to ambulate effectively or to perform fine and gross movements effectively as defined in 14.00C6 and 14.00C7;

or

D. Repeated manifestations of systemic sclerosis (scleroderma), with at least two of the constitutional symptoms or signs (severe fatigue, fever, malaise, or involuntary weight loss) and one of the following at the marked level:

1. Limitation of activities of daily living.

2. Limitation in maintaining social functioning.

3. Limitation in completing tasks in a timely manner due to deficiencies in concentration, persistence, or pace.

14.05 *Polymyositis and dermatomyositis.* As described in 14.00D4. With:

A. Proximal limb-girdle (pelvic or shoulder) muscle weakness, resulting in inability to ambulate effectively or inability to perform fine and gross movements effectively as defined in 14.00C6 and 14.00C7.

or

B. Impaired swallowing (dysphagia) with aspiration due to muscle weakness.

or

C. Impaired respiration due to intercostal and diaphragmatic muscle weakness.

or

D. Diffuse calcinosis with limitation of joint mobility or intestinal motility.

or

E. Repeated manifestations of polymyositis or dermatomyositis, with at least two of the constitutional symptoms or signs (severe fatigue, fever, malaise, or involuntary weight loss) and one of the following at the marked level:

1. Limitation of activities of daily living.

2. Limitation in maintaining social functioning.

3. Limitation in completing tasks in a timely manner due to deficiencies in concentration, persistence, or pace.

14.06 *Undifferentiated and mixed connective tissue disease.* As described in 14.00D5. With:

A. Involvement of two or more organs/body systems, with:

1. One of the organs/body systems involved to at least a moderate level of severity; and

2. At least two of the constitutional symptoms or signs (severe fatigue, fever, malaise, or involuntary weight loss).

or

B. Repeated manifestations of undifferentiated or mixed connective tissue disease, with at least two of the constitutional symptoms or signs (severe fatigue, fever, malaise, or involuntary weight loss) and one of the following at the marked level:

1. Limitation of activities of daily living.

2. Limitation in maintaining social functioning.

3. Limitation in completing tasks in a timely manner due to deficiencies in concentration, persistence, or pace.

14.07 *Immune deficiency disorders, excluding HIV infection.* As described in 14.00E. With:

A. One or more of the following infections. The infection(s) must either be resistant to treatment or require hospitalization or intravenous treatment three or more times in a 12-month period.

1. Sepsis; or

2. Meningitis; or

3. Pneumonia; or

4. Septic arthritis; or

5. Endocarditis; or

6. Sinusitis documented by appropriate medically acceptable imaging.

or

B. Stem cell transplantation as described under 14.00E3. Consider under a disability until at least 12 months from the date of transplantation. Thereafter, evaluate any residual impairment(s) under the criteria for the affected body system.

or

C. Repeated manifestations of an immune deficiency disorder, with at least two of the constitutional symptoms or signs (severe fatigue, fever, malaise, or involuntary weight loss) and one of the following at the marked level:

1. Limitation of activities of daily living.

2. Limitation in maintaining social function.

3. Limitation in completing tasks in a timely manner due to deficiencies in concentration, persistence, or pace.

14.08 *Human immunodeficiency virus (HIV) infection.* With documentation as described in 14.00F and one of the following:

A. Bacterial infections:

1. Mycobacterial infection (for example, caused by *M. avium-intracellulare, M. kansasii,* or *M. tuberculosis*) at a site other than the lungs, skin, or cervical or hilar lymph nodes, or pulmonary tuberculosis resistant to treatment; or

2. Nocardiosis; or

3. *Salmonella* bacteremia, recurrent non-typhoid; or

4. Multiple or recurrent bacterial infections, including pelvic inflammatory disease, requiring hospitalization or intravenous antibiotic treatment three or more times in a 12-month period. or

B. Fungal infections:

1. Aspergillosis; or

2. Candidiasis involving the esophagus, trachea, bronchi, or lungs, or at a site other than the skin, urinary tract, intestinal tract, or oral or vulvovaginal mucous membranes; or

3. Coccidioidomycosis, at a site other than the lungs or lymph nodes; or

4. Cryptococcosis, at a site other than the lungs (for example, cryptococcal meningitis); or

5. Histoplasmosis, at a site other than the lungs or lymph nodes; or

6. Mucormycosis; or

7. *Pneumocystis* pneumonia or extrapulmonary *Pneumocystis* infection. or

C. Protozoan or helminthic infections:

1. Cryptosporidiosis, isosporiasis, or microsporidiosis, with diarrhea lasting for 1 month or longer; or

2. Strongyloidiasis, extra-intestinal; or

3. Toxoplasmosis of an organ other than the liver, spleen, or lymph nodes. or

D. Viral infections:

1. *Cytomegalovirus* disease (documented as described in 14.00F3b(ii)) at a site other than the liver, spleen or lymph nodes; or

2. Herpes simplex virus causing:

a. Mucocutaneous infection (for example, oral, genital, perianal) lasting for 1 month or longer; or

b. Infection at a site other than the skin or mucous membranes (for example, bronchitis, pneumonitis, esophagitis, or encephalitis); or

c. Disseminated infection; or

3. Herpes zoster:

a. Disseminated; or

b. With multidermatomal eruptions that are resistant to treatment; or

4. Progressive multifocal leukoencephalopathy.

or

E. Malignant neoplasms:

1. Carcinoma of the cervix, invasive, FIGO stage II and beyond; or

2. Kaposi's sarcoma with:

a. Extensive oral lesions; or

b. Involvement of the gastrointestinal tract, lungs, or other visceral organs; or

3. Lymphoma (for example, primary lymphoma of the brain, Burkitt's lymphoma, immunoblastic sarcoma, other non-Hodgkin's lymphoma, Hodgkin's disease); or

4. Squamous cell carcinoma of the anal canal or anal margin.

or

F. Conditions of the skin or mucous membranes (other than described in B2, D2, or D3, above), with extensive fungating or ulcerating lesions not responding to treatment (for example, dermatological conditions such as eczema or psoriasis, vulvovaginal or other mucosal *Candida,* condyloma caused by human *Papillomavirus,* genital ulcerative disease).

or

G. HIV encephalopathy, characterized by cognitive or motor dysfunction that limits function and progresses.

or

H. HIV wasting syndrome, characterized by involuntary weight loss of 10 percent or more of baseline (computed based on pounds, kilograms, or body mass index (BMI)) or other significant involuntary weight loss as described in 14.00F5, and in the absence of a concurrent illness that could explain the findings. With either:

1. Chronic diarrhea with two or more loose stools daily lasting for 1 month or longer; or

2. Chronic weakness and documented fever greater than 38 °C (100.4 °F) for the majority of 1 month or longer.

or

I. Diarrhea, lasting for 1 month or longer, resistant to treatment, and requiring intravenous hydration, intravenous alimentation, or tube feeding.

or

J. One or more of the following infections (other than described in A-I, above). The infection(s) must either be resistant to treatment or require hospitalization or intravenous treatment three or more times in a 12-month period.

1. Sepsis; or

2. Meningitis; or

3. Pneumonia; or

4. Septic arthritis; or

5. Endocarditis; or

6. Sinusitis documented by appropriate medically acceptable imaging.

or

K. Repeated (as defined in 14.00I3) manifestations of HIV infection, including those listed in 14.08A–J, but without the requisite findings for those listings (for example, carcinoma of the cervix not meeting the criteria in 14.08E, diarrhea not meeting the criteria in 14.08I), or other manifestations (for example, oral hairy leukoplakia, myositis, pancreatitis, hepatitis, peripheral neuropathy, glucose intolerance, muscle weakness, cognitive or other mental limitation) resulting in significant, documented symptoms or

signs (for example, severe fatigue, fever, malaise, involuntary weight loss, pain, night sweats, nausea, vomiting, headaches, or insomnia) and one of the following at the marked level:

1. Limitation of activities of daily living.

2. Limitation in maintaining social functioning.

3. Limitation in completing tasks in a timely manner due to deficiencies in concentration, persistence, or pace.

14.09 *Inflammatory arthritis.* As described in 14.00D6. With:

A. Persistent inflammation or persistent deformity of:

1. One or more major peripheral weight-bearing joints resulting in the inability to ambulate effectively (as defined in 14.00C6); or

2. One or more major peripheral joints in each upper extremity resulting in the inability to perform fine and gross movements effectively (as defined in 14.00C7).

or

B. Inflammation or deformity in one or more major peripheral joints with:

1. Involvement of two or more organs/body systems with one of the organs/body systems involved to at least a moderate level of severity; and

2. At least two of the constitutional symptoms or signs (severe fatigue, fever, malaise, or involuntary weight loss).

or

C. Ankylosing spondylitis or other spondyloarthropathies, with:

1. Ankylosis (fixation) of the dorsolumbar or cervical spine as shown by appropriate medically acceptable imaging and measured on physical examination at 45° or more of flexion from the vertical position (zero degrees); or

2. Ankylosis (fixation) of the dorsolumbar or cervical spine as shown by appropriate medically acceptable imaging and measured on physical examination at 30° or more of flexion (but less than 45°) measured from the vertical position (zero degrees), and involvement of two or more organs/body systems with one of the organs/body systems involved to at least a moderate level of severity.

or

D. Repeated manifestations of inflammatory arthritis, with at least two of the constitutional symptoms or signs (severe fatigue, fever, malaise, or involuntary weight loss) and one of the following at the marked level:

1. Limitation of activities of daily living.

2. Limitation in maintaining social functioning.

3. Limitation in completing tasks in a timely manner due to deficiencies in concentration, persistence, or pace.

14.10 *Sjögren's syndrome.* As described in 14.00D7. With:

A. Involvement of two or more organs/body systems, with:

1. One of the organs/body systems involved to at least a moderate level of severity; and

2. At least two of the constitutional symptoms or signs (severe fatigue, fever, malaise, or involuntary weight loss).

or

B. Repeated manifestations of Sjögren's syndrome, with at least two of the constitutional symptoms or signs (severe fatigue, fever, malaise, or involuntary weight loss) and one of the following at the marked level:

1. Limitation of activities of daily living.

2. Limitation in maintaining social functioning.

3. Limitation in completing tasks in a timely manner due to deficiencies in concentration, persistence, or pace.

Part B

Medical criteria for the evaluation of impairments of children under age 18 (where criteria in part A do not give appropriate consideration to the particular disease process in childhood).

Sec.

100.00 Growth Impairment.
101.00 Musculoskeletal System.
102.00 Special Senses and Speech.
103.00 Respiratory System.
104.00 Cardiovascular System.
105.00 Digestive System.
106.00 Genitourinary Disorders.
107.00 Hematological Disorders.
108.00 Skin Disorders
109.00 Endocrine Disorders.
110.00 Congenital Disorders That Affect Multiple Body Systems.
111.00 Neurological.
112.00 Mental Disorders.
113.00 Malignant Neoplastic Diseases.
114.00 Immune System Disorders.

100.00 Growth Impairment

A. *Impairment of growth* may be disabling in itself or it may be an indicator of the severity of the impairment due to a specific disease process.

Determinations of growth impairment should be based upon the comparison of current height with at least three previous determinations, including length at birth, if available. Heights (or lengths) should be plotted on a standard growth chart, such as derived from the National Center for Health Statistics: NCHS Growth Charts. Height should be measured without shoes. Body weight corresponding to the ages represented by the heights should be furnished. The adult heights of the child's natural parents and the heights and ages of siblings should also be furnished. This will provide a basis upon which to identify those children whose short

stature represents a familial characteristic rather than a result of disease. This is particularly true for adjudication under 100.02B.

B. *Bone age determinations* should include a full descriptive report of medically acceptable imaging specifically obtained to determine bone age and must cite the standardization method used. Where appropriate medically acceptable imaging must be obtained currently as a basis for adjudication under 100.03, views or scans of the left hand and wrist should be ordered. In addition appropriate medically acceptable imaging of the knee and ankle should be obtained when cessation of growth is being evaluated in an older child at, or past, puberty. Medically acceptable imaging includes, but is not limited to, x-ray imaging, computerized axial tomography (CAT scan) or magnetic resonance imaging (MRI), with or without contrast material, myeolgraphy, and radionuclear bone scans. ''Appropriate'' means that the technique used is the proper one to support the evaluation and diagnosis of the impairment.

C. The criteria in this section are applicable until closure of the major epiphyses. The cessation of significant increase in height at that point would prevent the application of these criteria.

100.01 Category of Impairments, Growth

100.02 *Growth impairment,* considered to be related to an additional specific medically determinable impairment, and one of the following:

A. Fall of greater than 15 percentiles in height which is sustained; or

B. Fall to, or persistence of, height below the third percentile.

100.03 *Growth impairment,* not identified as being related to an additional, specific medically determinable impairment. With:

A. Fall of greater than 25 percentiles in height which is sustained; and

B. Bone age greater than two standard deviations (2 SD) below the mean for chronological age (see 100.00B).

101.00 Musculoskeletal System

A. *Disorders of the musculoskeletal system* may result from hereditary, congenital, or acquired pathologic processes. Impairments may result from infectious, inflammatory, or degenerative processes, traumatic or developmental events, or neoplastic, vascular, or toxic/metabolic diseases.

B. Loss of Function

1. *General.* Under this section, loss of function may be due to bone or joint deformity or destruction from any cause; miscellaneous disorders of the spine with or without radiculopathy or other neurological deficits; amputation; or fractures or soft tissue injuries, including burns, requiring prolonged periods of immobility or convalescence. The provisions of 101.02 and 101.03 notwithstanding, inflammatory arthritis is evaluated under 114.09 (see 114.00D6). Impairments with neurological causes are to be evaluated under 111.00ff.

2. How We Define Loss of Function in These Listings

a. *General.* Regardless of the cause(s) of a musculoskeletal impairment, functional loss for purposes of these listings is defined as the inability to ambulate effectively on a sustained basis for any reason, including pain associated with the underlying musculoskeletal impairment, or the inability to perform fine and gross movements effectively on a sustained basis for any reason, including pain associated with the underlying musculoskeletal impairment. The inability to ambulate effectively or the inability to perform fine and gross movements effectively must have lasted, or be expected to last, for at least 12 months. For the purposes of these criteria, consideration of the ability to perform these activities must be from a physical standpoint alone. When there is an inability to perform these activities due to a mental impairment, the criteria in 112.00ff are to be used. We will determine whether a child can ambulate effectively or can perform fine and gross movements effectively based on the medical and other evidence in the case record, generally without developing additional evidence about the child's ability to perform the specific activities listed as examples in 101.00B2b(2) and (3) and 101.00B2c(2) and (3).

b. What We Mean by Inability To Ambulate Effectively

(1) *Definition.* Inability to ambulate effectively means an extreme limitation of the ability to walk; *i.e.*, an impairment that interferes very seriously with the child's ability to independently initiate, sustain, or complete activities. Ineffective ambulation is defined generally as having insufficient lower extremity functioning (see 101.00J) to permit independent ambulation without the use of a hand-held assistive device(s) that limits the functioning of both upper extremities. (Listing 101.05C is an exception to this general definition because the child has the use of only one upper extremity due to amputation of a hand.)

(2) *How we assess inability to ambulate effectively for children too young to be expected to walk independently.* For children who are too young to be expected to walk independently, consideration of function must be based on assessment of limitations in the ability to perform comparable age-appropriate activities with the lower extremities, given normal developmental expectations. For such children, an extreme level of limitation means skills or performance at no greater

than one-half of age-appropriate expectations based on an overall developmental assessment rather than on one or two isolated skills.

(3) *How we assess inability to ambulate effectively for older children.* Older children, who would be expected to be able to walk when compared to other children the same age who do not have impairments, must be capable of sustaining a reasonable walking pace over a sufficient distance to be able to carry out age-appropriate activities. They must have the ability to travel age-appropriately without extraordinary assistance to and from school or a place of employment. Therefore, examples of ineffective ambulation for older children include, but are not limited to, the inability to walk without the use of a walker, two crutches or two canes, the inability to walk a block at a reasonable pace on rough or uneven surfaces, the inability to use standard public transportation, the inability to carry out age-appropriate school activities independently, and the inability to climb a few steps at a reasonable pace with the use of a single hand rail. The ability to walk independently about the child's home or a short distance at school without the use of assistive devices does not, in and of itself, constitute effective ambulation.

c. What We Mean by Inability To Perform Fine and Gross Movements Effectively

(1) *Definition.* Inability to perform fine and gross movements effectively means an extreme loss of function of both upper extremities; *i.e.*, an impairment that interferes very seriously with the child's ability to independently initiate, sustain, or complete activities. To use their upper extremities effectively, a child must be capable of sustaining such functions as reaching, pushing, pulling, grasping, and fingering in an age-appropriate manner to be able to carry out age-appropriate activities.

(2) *How we assess inability to perform fine and gross movements in very young children.* For very young children, we consider limitations in the ability to perform comparable age-appropriate activities involving the upper extremities compared to the ability of children the same age who do not have impairments. For such children, an extreme level of limitation means skills or performance at no greater than one-half of age-appropriate expectations based on an overall developmental assessment.

(3) *How we assess inability to perform fine and gross movements in older children.* For older children, examples of inability to perform fine and gross movements effectively include, but are not limited to, the inability to prepare a simple meal and feed oneself, the inability to take care of personal hygiene, or the inability to sort and handle papers or files, depending upon which activities are age-appropriate.

d. *Pain or other symptoms.* Pain or other symptoms may be an important factor contributing to functional loss. In order for pain or other symptoms to be found to affect a child's ability to function in an age-appropriate manner or to perform basic work activities, medical signs or laboratory findings must show the existence of a medically determinable impairment(s) that could reasonably be expected to produce the pain or other symptoms. The musculoskeletal listings that include pain or other symptoms among their criteria also include criteria for limitations in functioning as a result of the listed impairment, including limitations caused by pain. It is, therefore, important to evaluate the intensity and persistence of such pain or other symptoms carefully in order to determine their impact on the child's functioning under these listings. See also §§ 404.1525(f) and 404.1529 of this part, and §§ 416.925(f) and 416.929 of part 416 of this chapter.

C. Diagnosis and Evaluation

1. *General.* Diagnosis and evaluation of musculoskeletal impairments should be supported, as applicable, by detailed descriptions of the joints, including ranges of motion, condition of the musculature (e.g., weakness, atrophy), sensory or reflex changes, circulatory deficits, and laboratory findings, including findings on x-ray or other appropriate medically acceptable imaging. Medically acceptable imaging includes, but is not limited to, x-ray imaging, computerized axial tomography (CAT scan) or magnetic resonance imaging (MRI), with or without contrast material, myelography, and radionuclear bone scans. ''Appropriate'' means that the technique used is the proper one to support the evaluation and diagnosis of the impairment.

2. *Purchase of certain medically acceptable imaging.* While any appropriate medically acceptable imaging is useful in establishing the diagnosis of musculoskeletal impairments, some tests, such as CAT scans and MRIs, are quite expensive, and we will not routinely purchase them. Some, such as myelograms, are invasive and may involve significant risk. We will not order such tests. However, when the results of any of these tests are part of the existing evidence in the case record we will consider them together with the other relevant evidence.

3. *Consideration of electrodiagnostic procedures.* Electrodiagnostic procedures may be useful in establishing the clinical diagnosis, but do not constitute alternative criteria to the requirements of 101.04.

D. *The physical examination* must include a detailed description of the rheumatological, orthopedic, neurological, and other findings appropriate to the specific impairment being evaluated. These physical findings must be

determined on the basis of objective observation during the examination and not simply a report of the child's allegation; e.g., ''He says his leg is weak, numb.'' Alternative testing methods should be used to verify the abnormal findings; e.g., a seated straight-leg raising test in addition to a supine straight-leg raising test. Because abnormal physical findings may be intermittent, their presence over a period of time must be established by a record of ongoing management and evaluation. Care must be taken to ascertain that the reported examination findings are consistent with the child's age and activities.

E. Examination of the Spine

1. *General*. Examination of the spine should include a detailed description of gait, range of motion of the spine given quantitatively in degrees from the vertical position (zero degrees) or, for straight-leg raising from the sitting and supine position (zero degrees), any other appropriate tension signs, motor and sensory abnormalities, muscle spasm, when present, and deep tendon reflexes. Observations of the child during the examination should be reported; e.g., how he or she gets on and off the examination table. Inability to walk on the heels or toes, to squat, or to arise from a squatting position, when appropriate, may be considered evidence of significant motor loss. However, a report of atrophy is not acceptable as evidence of significant motor loss without circumferential measurements of both thighs and lower legs, or both upper and lower arms, as appropriate, at a stated point above and below the knee or elbow given in inches or centimeters. Additionally, a report of atrophy should be accompanied by measurement of the strength of the muscle(s) in question generally based on a grading system of 0 to 5, with 0 being complete loss of strength and 5 being maximum strength. A specific description of atrophy of hand muscles is acceptable without measurements of atrophy but should include measurements of grip and pinch strength. However, because of the unreliability of such measurement in younger children, these data are not applicable to children under 5 years of age.

2. *When neurological abnormalities persist*. Neurological abnormalities may not completely subside after treatment or with the passage of time. Therefore, residual neurological abnormalities that persist after it has been determined clinically or by direct surgical or other observation that the ongoing or progressive condition is no longer present will not satisfy the required findings in 101.04. More serious neurological deficits (paraparesis, paraplegia) are to be evaluated under the criteria in 111.00ff.

F. *Major joints* refers to the major peripheral joints, which are the hip, knee, shoulder, elbow, wrist-hand, and ankle-foot, as opposed to other peripheral joints (e.g., the joints of the hand or forefoot) or axial joints (*i.e.*, the joints of the spine.) The wrist and hand are considered together as one major joint, as are the ankle and foot. Since only the ankle joint, which consists of the juncture of the bones of the lower leg (tibia and fibula) with the hindfoot (tarsal bones), but not the forefoot, is crucial to weight bearing, the ankle and foot are considered separately in evaluating weight bearing.

G. *Measurements of joint motion* are based on the techniques described in the chapter on the extremities, spine, and pelvis in the current edition of the ''Guides to the Evaluation of Permanent Impairment'' published by the American Medical Association.

H. Documentation.

1. *General*. Musculoskeletal impairments frequently improve with time or respond to treatment. Therefore, a longitudinal clinical record is generally important for the assessment of severity and expected duration of an impairment unless the child is a newborn or the claim can be decided favorably on the basis of the current evidence.

2. *Documentation of medically prescribed treatment and response*. Many children, especially those who have listing-level impairments, will have received the benefit of medically prescribed treatment. Whenever evidence of such treatment is available it must be considered.

3. *When there is no record of ongoing treatment*. Some children will not have received ongoing treatment or have an ongoing relationship with the medical community despite the existence of a severe impairment(s). In such cases, evaluation will be made on the basis of the current objective medical evidence and other available evidence, taking into consideration the child's medical history, symptoms, and medical source opinions. Even though a child who does not receive treatment may not be able to show an impairment that meets the criteria of one of the musculoskeletal listings, the child may have an impairment(s) that is either medically or, in the case of a claim for benefits under part 416 of this chapter, functionally equivalent in severity to one of the listed impairments.

4. *Evaluation when the criteria of a musculoskeletal listing are not met*. These listings are only examples of common musculoskeletal disorders that are severe enough to find a child disabled. Therefore, in any case in which a child has a medically determinable impairment that is not listed, an impairment that does not meet the requirements of a listing, or a combination of impairments no one of which meets the requirements of a listing, we will consider whether the child's impairment(s) is medically or, in the case of a claim for benefits under part 416 of this chapter, functionally equivalent in severity

to the criteria of a listing. (See §§ 404.1526, 416.926, and 416.926a.) Individuals with claims for benefits under part 404, who have an impairment(s) with a level of severity that does not meet or equal the criteria of the musculoskeletal listings may or may not have the RFC that would enable them to engage in substantial gainful activity. Evaluation of the impairment(s) of these individuals should proceed through the final steps of the sequential evaluation process in § 404.1520 (or, as appropriate, the steps in the medical improvement review standard in § 404.1594).

I. Effects of Treatment

1. *General*. Treatments for musculoskeletal disorders may have beneficial effects or adverse side effects. Therefore, medical treatment (including surgical treatment) must be considered in terms of its effectiveness in ameliorating the signs, symptoms, and laboratory abnormalities of the disorder, and in terms of any side effects that may further limit the child.

2. *Response to treatment*. Response to treatment and adverse consequences of treatment may vary widely. For example, a pain medication may relieve a child's pain completely, partially, or not at all. It may also result in adverse effects, e.g., drowsiness, dizziness, or disorientation, that compromise the child's ability to function. Therefore, each case must be considered on an individual basis, and include consideration of the effects of treatment on the child's ability to function.

3. *Documentation*. A specific description of the drugs or treatment given (including surgery), dosage, frequency of administration, and a description of the complications or response to treatment should be obtained. The effects of treatment may be temporary or long-term. As such, the finding regarding the impact of treatment must be based on a sufficient period of treatment to permit proper consideration or judgment about future functioning.

J. Orthotic, Prosthetic, or Assistive Devices

1. *General*. Consistent with clinical practice, children with musculoskeletal impairments may be examined with and without the use of any orthotic, prosthetic, or assistive devices as explained in this section.

2. *Orthotic devices*. Examination should be with the orthotic device in place and should include an evaluation of the child's maximum ability to function effectively with the orthosis. It is unnecessary to routinely evaluate the child's ability to function without the orthosis in place. If the child has difficulty with, or is unable to use, the orthotic device, the medical basis for the difficulty should be documented. In such cases, if the impairment involves a lower extremity or extremities, the examination should include information on the child's ability to ambulate effectively without the device in place unless contraindicated by the medical judgment of a physician who has treated or examined the child.

3. *Prosthetic devices*. Examination should be with the prosthetic device in place. In amputations involving a lower extremity or extremities, it is unnecessary to evaluate the child's ability to walk without the prosthesis in place. However, the child's medical ability to use a prosthesis to ambulate effectively, as defined in 101.00B2b, should be evaluated. The condition of the stump should be evaluated without the prosthesis in place.

4. *Hand-held assistive devices*. When a child with an impairment involving a lower extremity or extremities uses a hand-held assistive device, such as a cane, crutch or walker, examination should be with and without the use of the assistive device unless contraindicated by the medical judgment of a physician who has treated or examined the child. The child's ability to ambulate with and without the device provides information as to whether, or the extent to which, the child is able to ambulate without assistance. The medical basis for the use of any assistive device (e.g., instability, weakness) should be documented. The requirement to use a hand-held assistive device may also impact on the child's functional capacity by virtue of the fact that one or both upper extremities are not available for such activities as lifting, carrying, pushing, and pulling.

K. *Disorders of the spine*, listed in 101.04, result in limitations because of distortion of the bony and ligamentous architecture of the spine and associated impingement on nerve roots (including the cauda equina) or spinal cord. Such impingement on nerve tissue may result from a herniated nucleus pulposus or other miscellaneous conditions. Neurological abnormalities resulting from these disorders are to be evaluated by referral to the neurological listings in 111.00ff, as appropriate. (See also 101.00B and E.)

1. *Herniated nucleus pulposus* is a disorder frequently associated with the impingement of a nerve root, but occurs infrequently in children. Nerve root compression results in a specific neuro-anatomic distribution of symptoms and signs depending upon the nerve root(s) compromised.

2. *Other miscellaneous conditions* that may cause weakness of the lower extremities, sensory changes, areflexia, trophic ulceration, bladder or bowel incontinence, and that should be evaluated under 101.04 include, but are not limited to, lysosomal disorders, metabolic disorders, vertebral osteomyelitis, vertebral fractures and achondroplasia. Disorders such as spinal dysrhaphism, (e.g., spina bifida) diastematomyelia, and tethered cord syndrome may also cause such abnormalities. In these cases, there may be gait difficulty and deformity of the lower extremities based on neurological abnormalities,

and the neurological effects are to be evaluated under the criteria in 111.00ff.

L. *Abnormal curvatures of the spine.* Abnormal curvatures of the spine (specifically, scoliosis, kyphosis and kyphoscoliosis) can result in impaired ambulation, but may also adversely affect functioning in body systems other than the musculoskeletal system. For example, a child's ability to breathe may be affected; there may be cardiac difficulties (e.g., impaired myocardial function); or there may be disfigurement resulting in withdrawal or isolation. When there is impaired ambulation, evaluation of equivalence may be made by reference to 114.09A. When the abnormal curvature of the spine results in symptoms related to fixation of the dorsolumbar or cervical spine, evaluation of equivalence may be made by reference to 114.09C. When there is respiratory or cardiac involvement or an associated mental disorder, evaluation may be made under 103.00ff, 104.00ff, or 112.00ff, as appropriate. Other consequences should be evaluated according to the listing for the affected body system.

M. *Under continuing surgical management,* as used in 101.07 and 101.08, refers to surgical procedures and any other associated treatments related to the efforts directed toward the salvage or restoration of functional use of the affected part. It may include such factors as post-surgical procedures, surgical complications, infections, or other medical complications, related illnesses, or related treatments that delay the child's attainment of maximum benefit from therapy. When burns are not under continuing surgical management, see 108.00F.

N. *After maximum benefit from therapy has been achieved* in situations involving fractures of an upper extremity (101.07), or soft tissue injuries (101.08), *i.e.*, there have been no significant changes in physical findings or on appropriate medically acceptable imaging for any 6-month period after the last definitive surgical procedure or other medical intervention, evaluation must be made on the basis of the demonstrable residuals, if any. A finding that 101.07 or 101.08 is met must be based on a consideration of the symptoms, signs, and laboratory findings associated with recent or anticipated surgical procedures and the resulting recuperative periods, including any related medical complications, such as infections, illnesses, and therapies which impede or delay the efforts toward restoration of function. Generally, when there has been no surgical or medical intervention for 6 months after the last definitive surgical procedure, it can be concluded that maximum therapeutic benefit has been reached. Evaluation at this point must be made on the basis of the demonstrable residual limitations, if any, considering the child's impairment-related symptoms, signs, and laboratory findings, any residual symptoms, signs, and laboratory findings associated with such surgeries, complications, and recuperative periods, and other relevant evidence.

O. *Major function of the face and head,* for purposes of listing 101.08, relates to impact on any or all of the activities involving vision, hearing, speech, mastication, and the initiation of the digestive process.

P. *When surgical procedures have been performed,* documentation should include a copy of the operative notes and available pathology reports.

101.01 Category of Impairments, Musculoskeletal

101.02 *Major dysfunction of a joint(s) (due to any cause):* Characterized by gross anatomical deformity (e.g., subluxation, contracture, bony or fibrous ankylosis, instability) and chronic joint pain and stiffness with signs of limitation of motion or other abnormal motion of the affected joint(s), and findings on appropriate medically acceptable imaging of joint space narrowing, bony destruction, or ankylosis of the affected joint(s). With:

A. Involvement of one major peripheral weight-bearing joint (*i.e.*, hip, knee, or ankle), resulting in inability to ambulate effectively, as defined in 101.00B2b;

or

B. Involvement of one major peripheral joint in each upper extremity (*i.e.*, shoulder, elbow, or wrist-hand), resulting in inability to perform fine and gross movements effectively, as defined in 101.00B2c.

101.03 *Reconstructive surgery or surgical arthrodesis of a major weight-bearing joint,* with inability to ambulate effectively, as defined in 101.00B2b, and return to effective ambulation did not occur, or is not expected to occur, within 12 months of onset.

101.04 *Disorders of the spine* (e.g., lysosomal disorders, metabolic disorders, vertebral osteomyelitis, vertebral fracture, achondroplasia) resulting in compromise of a nerve root (including the cauda equina) or the spinal cord, with evidence of nerve root compression characterized by neuro-anatomic distribution of pain, limitation of motion of the spine, motor loss (atrophy with associated muscle weakness or muscle weakness) accompanied by sensory or reflex loss and, if there is involvement of the lower back, positive straight-leg raising test (sitting and supine).

101.05 *Amputation (due to any cause).*

A. Both hands;

or

B. One or both lower extremities at or above the tarsal region, with stump complications resulting in medical inability to use a prosthetic device to ambulate effectively, as defined in 101.00B2b, which have lasted or are expected to last for at least 12 months;

or

C. One hand and one lower extremity at or above the tarsal region, with inability to ambulate effectively, as defined in 101.00B2b;

or

D. Hemipelvectomy or hip disarticulation.

101.06 *Fracture of the femur, tibia, pelvis, or one or more of the tarsal bones.* With:

A. Solid union not evident on appropriate medically acceptable imaging, and not clinically solid;

and

B. Inability to ambulate effectively, as defined in 101.00B2b, and return to effective ambulation did not occur or is not expected to occur within 12 months of onset.

101.07 *Fracture of an upper extremity* with nonunion of a fracture of the shaft of the humerus, radius, or ulna, under continuing surgical management, as defined in 101.00M, directed toward restoration of functional use of the extremity, and such function was not restored or expected to be restored within 12 months of onset.

101.08 *Soft tissue injury (e.g., burns)* of an upper or lower extremity, trunk, or face and head, under continuing surgical management, as defined in 101.00M, directed toward the salvage or restoration of major function, and such major function was not restored or expected to be restored within 12 months of onset. Major function of the face and head is described in 101.00O.

102.00 Special Senses and Speech

A. *How do we evaluate visual disorders?*

1. *What are visual disorders?* Visual disorders are abnormalities of the eye, the optic nerve, the optic tracts, or the brain that may cause a loss of visual acuity or visual fields. A loss of visual acuity limits your ability to distinguish detail, read, do fine work, or perform other age-appropriate activities. A loss of visual fields limits your ability to perceive visual stimuli in the peripheral extent of vision.

2. *How do we define statutory blindness?* Statutory blindness is blindness as defined in sections 216(i)(1) and 1614(a)(2) of the Social Security Act (Act).

a. The Act defines blindness as central visual acuity of 20/200 or less in the better eye with the use of a correcting lens. We use your best-corrected central visual acuity for distance in the better eye when we determine if this definition is met. (For visual acuity testing requirements, see 102.00A5.)

b. The Act also provides that an eye that has a visual field limitation such that the widest diameter of the visual field subtends an angle no greater than 20 degrees is considered as having a central visual acuity of 20/200 or less. (For visual field testing requirements, see 102.00A6.)

c. You have statutory blindness only if your visual disorder meets the criteria of 102.02A, 102.02B, or 102.03A. You do not have statutory blindness if your visual disorder medically equals the criteria of 102.02A, 102.02B, or 102.03A or meets or medically equals the criteria of 102.03B, 102.03C, 102.04A, or 102.04B because your disability is based on criteria other than those in the statutory definition of blindness.

3. *What evidence do we need to establish statutory blindness under title XVI?* To establish that you have statutory blindness under title XVI, we need evidence showing only that your central visual acuity in your better eye or your visual field in your better eye meets the criteria in 102.00A2, provided that those measurements are consistent with the other evidence in your case record. We do not need documentation of the cause of your blindness. Also, there is no duration requirement for statutory blindness under title XVI (see §§ 416.981 and 416.983 of this chapter).

4. *What evidence do we need to evaluate visual disorders, including those that result in statutory blindness under title II?* To evaluate your visual disorder, we usually need a report of an eye examination that includes measurements of your best-corrected central visual acuity (see 102.00A5) or the extent of your visual fields (see 102.00A6), as appropriate. If you have visual acuity or visual field loss, we need documentation of the cause of the loss. A standard eye examination will usually indicate the cause of any visual acuity loss. A standard eye examination can also indicate the cause of some types of visual field deficits. Some disorders, such as cortical visual disorders, may result in abnormalities that do not appear on a standard eye examination. If the standard eye examination does not indicate the cause of your vision loss, we will request the information used to establish the presence of your visual disorder. If your visual disorder does not satisfy the criteria in 102.02, 102.03, or 102.04, we will request a description of how your visual disorder affects your ability to function.

5. *How do we measure your best-corrected central visual acuity?*

a. *Visual acuity testing.* When we need to measure your best-corrected central visual acuity, which is your optimal visual acuity attainable with the use of a corrective lens, we use visual acuity testing for distance that was carried out using Snellen methodology or any other testing methodology that is comparable to Snellen methodology.

(i) Your best-corrected central visual acuity for distance is usually measured by determining what you can see from 20 feet. If your visual acuity is measured for a distance other than 20 feet, we will convert it to a 20-

foot measurement. For example, if your visual acuity is measured at 10 feet and is reported as 10/40, we will convert this measurement to 20/80.

(ii) A visual acuity recorded as CF (counts fingers), HM (hand motion only), LP or LPO (light perception or light perception only), or NLP (no light perception) indicates that no optical correction will improve your visual acuity. If your central visual acuity in an eye is recorded as CF, HM, LP or LPO, or NLP, we will determine that your best-corrected central visual acuity is 20/200 or less in that eye.

(iii) We will not use the results of pinhole testing or automated refraction acuity to determine your best-corrected central visual acuity. These tests provide an estimate of potential visual acuity but not an actual measurement of your best-corrected central visual acuity.

(iv) Very young children, such as infants and toddlers, cannot participate in testing using Snellen methodology or other comparable testing. If you are unable to participate in testing using Snellen methodology or other comparable testing due to your young age, we will consider clinical findings of your fixation and visual-following behavior. If both these behaviors are absent, we will consider the anatomical findings or the results of neuroimaging, electroretinogram, or visual evoked response (VER) testing when this testing has been performed.

b. *Other test charts.*

(i) Children between the ages of 3 and 5 often cannot identify the letters on a Snellen or other letter test chart. Specialists with expertise in assessment of childhood vision use alternate methods for measuring visual acuity in young children. We consider alternate methods, for example, the Landolt C test or the tumbling-E test, which are used to evaluate young children who are unable to participate in testing using Snellen methodology, to be comparable to testing using Snellen methodology.

(ii) Most test charts that use Snellen methodology do not have lines that measure visual acuity between 20/100 and 20/200. Some test charts, such as the Bailey-Lovie or the Early Treatment Diabetic Retinopathy Study (ETDRS), used mostly in research settings, have such lines. If your visual acuity is measured with one of these charts, and you cannot read any of the letters on the 20/100 line, we will determine that you have statutory blindness based on a visual acuity of 20/200 or less. For example, if your best-corrected central visual acuity for distance in the better eye is 20/160 using an ETDRS chart, we will find that you have statutory blindness. Regardless of the type of test chart used, you do not have statutory blindness if you can read at least one letter on the 20/100 line. For example, if your best-corrected central visual acuity for distance in the better eye is 20/125+1 using an ETDRS chart, we will find that you do not have statutory blindness because you are able to read one letter on the 20/100 line.

c. *Testing using a specialized lens.* In some instances, you may have visual acuity testing performed using a specialized lens, such as a contact lens. We will use the visual acuity measurements obtained with a specialized lens only if you have demonstrated the ability to use the specialized lens on a sustained basis. We will not use visual acuity measurements obtained with telescopic lenses.

d. *Cycloplegic refraction* is an examination of the eye performed after administering cycloplegic eye drops capable of relaxing the ability of the pupil to become smaller and temporarily paralyzing the focusing muscles. If your case record contains the results of cycloplegic refraction, we may use the results to determine your best-corrected central visual acuity. We will not purchase cycloplegic refraction.

e. *VER testing* measures your response to visual events and can often detect dysfunction that is undetectable through other types of examinations. If you have an absent response to VER testing in your better eye, we will determine that your best-corrected central visual acuity is 20/200 or less in that eye and that your visual acuity loss satisfies the criterion in 102.02A or 102.02B4, as appropriate, when these test results are consistent with the other evidence in your case record. If you have a positive response to VER testing in an eye, we will not use that result to determine your best-corrected central visual acuity in that eye.

6. *How do we measure your visual fields?*

a. *General.* We generally need visual field testing when you have a visual disorder that could result in visual field loss, such as glaucoma, retinitis pigmentosa, or optic neuropathy, or when you display behaviors that suggest a visual field loss. When we need to measure the extent of your visual field loss, we use visual field testing (also referred to as perimetry) carried out using automated static threshold perimetry performed on an acceptable perimeter. (For perimeter requirements, see 102.00A9.)

b. *Automated static threshold perimetry requirements.*

(i) The test must use a white size III Goldmann stimulus and a 31.5 apostilb (asb) white background (or a 10 candela per square meter (cd/m^2) white background). The stimuli test locations must be no more than 6 degrees apart horizontally or vertically. Measurements must be reported on standard charts and include a description of the size and intensity of the test stimulus.

(ii) We measure the extent of your visual field loss by determining the portion of the visual field in which you can see a white

III4e stimulus. The ''III'' refers to the standard Goldmann test stimulus size III (4 mm^2), and the ''4e'' refers to the standard Goldmann intensity filter (0 decibel (dB) attenuation, which allows presentation of the maximum luminance) used to determine the intensity of the stimulus.

(iii) In automated static threshold perimetry, the intensity of the stimulus varies. The intensity of the stimulus is expressed in decibels (dB). A perimeter's maximum stimulus luminance is usually assigned the value 0 dB. We need to determine the dB level that corresponds to a 4e intensity for the particular perimeter being used. We will then use the dB printout to determine which points you see at a 4e intensity level (a ''seeing point''). For example:

A. When the maximum stimulus luminance (0 dB stimulus) on an acceptable perimeter is 10,000 asb, a 10 dB stimulus is equivalent to a 4e stimulus. Any point you see at 10 dB or greater is a seeing point.

B. When the maximum stimulus luminance (0 dB stimulus) on an acceptable perimeter is 4,000 asb, a 6 dB stimulus is equivalent to a 4e stimulus. Any point you see at 6 dB or greater is a seeing point.

C. When the maximum stimulus luminance (0 dB stimulus) on an acceptable perimeter is 1,000 asb, a 0 dB stimulus is equivalent to a 4e stimulus. Any point you see at 0 dB or greater is a seeing point.

c. *Evaluation under 102.03A*. To determine statutory blindness based on visual field loss in your better eye (102.03A), we need the results of a visual field test that measures the central 24 to 30 degrees of your visual field; that is, the area measuring 24 to 30 degrees from the point of fixation. Acceptable tests include the Humphrey Field Analyzer (HFA) 30–2, HFA 24–2, and Octopus 32.

d. *Evaluation under 102.03B*. To determine whether your visual field loss meets listing 102.03B, we use the mean deviation or defect (MD) from acceptable automated static threshold perimetry that measures the central 30 degrees of the visual field. MD is the average sensitivity deviation from normal values for all measured visual field locations. When using results from HFA tests, which report the MD as a negative number, we use the absolute value of the MD to determine whether your visual field loss meets listing 102.03B. We cannot use tests that do not measure the central 30 degrees of the visual field, such as the HFA 24–2, to determine if your impairment meets or medically equals 102.03B.

e. *Other types of perimetry*. If your case record contains visual field measurements obtained using manual or automated kinetic perimetry, such as Goldmann perimetry or the HFA ''SSA Test Kinetic,'' we can generally use these results if the kinetic test was performed using a white III4e stimulus projected on a white 31.5 asb (10 cd/m^2) background. Automated kinetic perimetry, such as the HFA ''SSA Test Kinetic,'' does not detect limitations in the central visual field because testing along a meridian stops when you see the stimulus. If your visual disorder has progressed to the point at which it is likely to result in a significant limitation in the central visual field, such as a scotoma (see 102.00A6h), we will not use *automated* kinetic perimetry to determine the extent of your visual field loss. Instead, we will determine the extent of your visual field loss using automated static threshold perimetry or manual kinetic perimetry.

f. *Screening tests*. We will not use the results of visual field screening tests, such as confrontation tests, tangent screen tests, or automated static screening tests, to determine that your impairment meets or medically equals a listing, or functionally equals the listings. We can consider normal results from visual field screening tests to determine whether your visual disorder is severe when these test results are consistent with the other evidence in your case record. (See § 416.924(c) of this chapter.) We will not consider normal test results to be consistent with the other evidence if the clinical findings indicate that your visual disorder has progressed to the point that it is likely to cause visual field loss, or you have a history of an operative procedure for retinal detachment.

g. *Use of corrective lenses*. You must not wear eyeglasses during visual field testing because they limit your field of vision. You may wear contact lenses to correct your visual acuity during the visual field test to obtain the most accurate visual field measurements. For this single purpose, you do not need to demonstrate that you have the ability to use the contact lenses on a sustained basis.

h. *Scotoma*. A scotoma is a field defect or non-seeing area (also referred to as a ''blind spot'') in the visual field surrounded by a normal field or seeing area. When we measure your visual field, we subtract the length of any scotoma, other than the normal blind spot, from the overall length of any diameter on which it falls.

7. *How do we determine your visual acuity efficiency, visual field efficiency, and visual efficiency?*

a. *General*. *Visual efficiency*, a calculated value of your remaining visual function, is the combination of your *visual acuity efficiency* and your *visual field efficiency* expressed as a percentage.

b. *Visual acuity efficiency*. Visual acuity efficiency is a percentage that corresponds to the best-corrected central visual acuity for distance in your better eye. See Table 1.

TABLE 1—VISUAL ACUITY EFFICIENCY

Snellen best-corrected central visual acuity for distance		Visual acuity efficiency (%) (102.04A)
English	Metric	
20/16	6/5	100
20/20	6/6	100
20/25	6/7.5	95
20/30	6/9	90
20/40	6/12	85
20/50	6/15	75
20/60	6/18	70
20/70	6/21	65
20/80	6/24	60
20/100	6/30	50

c. *Visual field efficiency*. Visual field efficiency is a percentage that corresponds to the visual field in your better eye. Under 102.03C, we require kinetic perimetry to determine your visual field efficiency percentage. We calculate the visual field efficiency percentage by adding the number of degrees you see along the eight principal meridians found on a visual field chart (0, 45, 90, 135, 180, 225, 270, and 315) in your better eye and dividing by 5. For example, in Figure 1:

A. The diagram of the left eye illustrates a visual field, as measured with a III4e stimulus, contracted to 30 degrees in two meridians (180 and 225) and to 20 degrees in the remaining six meridians. The visual efficiency percentage of this field is: $((2 \times 30) + (6 \times 20)) \div 5 = 36$ percent.

B. The diagram of the right eye illustrates the extent of a normal visual field as measured with a III4e stimulus. The sum of the eight principal meridians of this field is 500 degrees. The visual efficiency percentage of this field is $500 \div 5 = 100$ percent.

Figure 1:

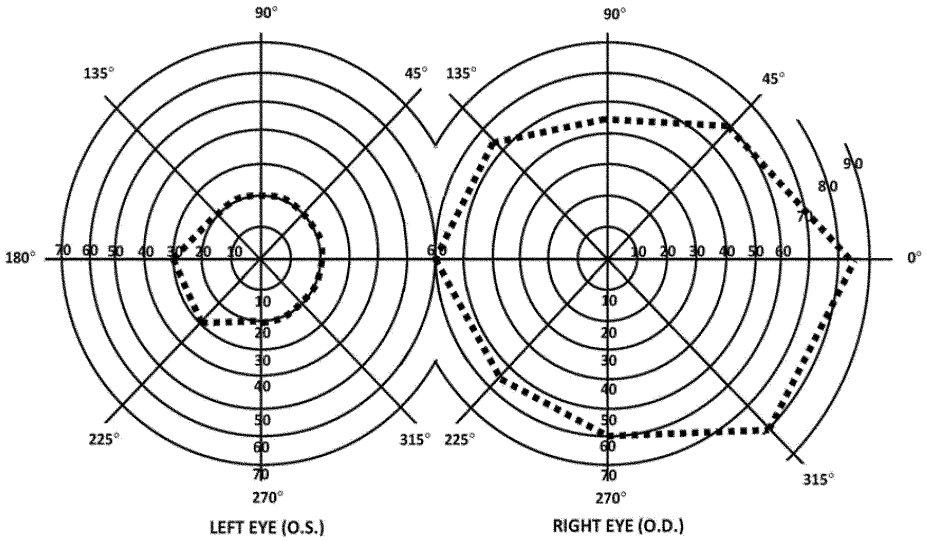

d. *Visual efficiency*. Under 102.04A, we calculate the visual efficiency percentage by multiplying your visual acuity efficiency percentage (see 102.00A7b) by your visual field efficiency percentage (see 102.00A7c) and dividing by 100. For example, if your visual acuity efficiency percentage is 75 and your visual field efficiency percentage is 36, your visual efficiency percentage is: $(75 \times 36) \div 100 = 27$ percent.

8. *How do we determine your visual acuity impairment value, visual field impairment value, and visual impairment value?*

a. *General*. *Visual impairment value*, a calculated value of your loss of visual function, is the combination of your *visual acuity impairment value* and your *visual field impairment value*.

b. *Visual acuity impairment value*. Your visual acuity impairment value corresponds to the best-corrected central visual acuity for distance in your better eye. See Table 2.

TABLE 2—VISUAL ACUITY IMPAIRMENT VALUE

Snellen best-corrected central visual acuity for distance		Visual acuity impairment value (102.04B)
English	Metric	
20/16	6/5	0.00
20/20	6/6	0.00
20/25	6/7.5	0.10
20/30	6/9	0.18
20/40	6/12	0.30
20/50	6/15	0.40
20/60	6/18	0.48
20/70	6/21	0.54
20/80	6/24	0.60
20/100	6/30	0.70

c. *Visual field impairment value.* Your visual field impairment value corresponds to the visual field in your better eye. Using the MD from acceptable automated static threshold perimetry, we calculate the visual field impairment value by dividing the absolute value of the MD by 22. For example, if your MD on an HFA 30–2 is −16, your visual field impairment value is: $|-16| \div 22 = 0.73$.

d. *Visual impairment value.* Under 102.04B, we calculate the visual impairment value by adding your visual acuity impairment value (see 102.00A8b) and your visual field impairment value (see 102.00A8c). For example, if your visual acuity impairment value is 0.48 and your visual field impairment value is 0.73, your visual impairment value is: 0.48 + 0.73 = 1.21.

9. *What are our requirements for an acceptable perimeter?* We will use results from automated static threshold perimetry performed on a perimeter that:

a. Uses optical projection to generate the test stimuli.

b. Has an internal normative database for automatically comparing your performance with that of the general population.

c. Has a statistical analysis package that is able to calculate visual field indices, particularly mean deviation or mean defect.

d. Demonstrates the ability to correctly detect visual field loss and correctly identify normal visual fields.

e. Demonstrates good test-retest reliability.

f. Has undergone clinical validation studies by three or more independent laboratories with results published in peer-reviewed ophthalmic journals.

B. *How do we evaluate hearing loss?*

1. *What evidence do we need?*

a. We need evidence showing that you have a medically determinable impairment that causes your hearing loss and audiometric measurements of the severity of your hearing loss. We generally require both a complete otologic examination and audiometric testing to establish that you have a medically determinable impairment that causes your hearing loss. You should have this audiometric testing within 2 months of the complete otologic examination. Once we have evidence that you have a medically determinable impairment, we can use the results of later audiometric testing to assess the severity of your hearing loss without another complete otologic examination. We will consider your test scores together with any other relevant information we have about your hearing, including information from outside of the test setting.

b. The complete otologic examination must be performed by a licensed physician (medical or osteopathic doctor). It must include your medical history, your description of how your hearing loss affects you, and the physician's description of the appearance of the external ears (pinnae and external ear canals), evaluation of the tympanic membranes, and assessment of any middle ear abnormalities.

c. Audiometric testing must be performed by, or under the direct supervision of, an otolaryngologist or by an audiologist qualified to perform such tests. We consider an audiologist to be qualified if he or she is currently and fully licensed or registered as a clinical audiologist by the State or U.S. territory in which he or she practices. If no licensure or registration is available, the audiologist must be currently certified by the American Board of Audiology or have a Certificate of Clinical Competence (CCC–A) from the American Speech-Language-Hearing Association (ASHA).

2. *What audiometric testing do we need when you do not have a cochlear implant?*

a. *General.* We need either physiologic or behavioral testing (other than screening testing, see 102.00B2g) that is appropriate for your age at the time of testing. *See* 102.00B2c–102.00B2f. We will make every reasonable effort to obtain the results of physiologic testing that has been done; however, we will not purchase such testing.

b. *Testing requirements.* The testing must be conducted in accordance with the most recently published standards of the American National Standards Institute (ANSI). You must not wear hearing aids during the testing. Additionally, a person described in 102.00B1c must perform an otoscopic examination immediately before the audiometric testing. (An *otoscopic examination* provides a description of the appearance of your external ear canals and an evaluation of the tympanic membranes. In these rules, we use the term to include otoscopic examinations performed by physicians and otoscopic inspections performed by audiologists and others.) The otoscopic examination must show that there are no conditions that would prevent valid audiometric testing, such as fluid in the ear, ear infection, or obstruction in an ear canal. The person performing the test should also report on any other factors, such as your ability to maintain attention, that

can affect the interpretation of the test results.

c. *Children from birth to the attainment of age 6 months.*

(i) We need physiologic testing, such as auditory brainstem response (ABR) testing.

(ii) To determine whether your hearing loss meets 102.10A, we will average your hearing thresholds at 500, 1000, 2000, and 4000 Hertz (Hz). If you do not have a response at a particular frequency, we will use a threshold of 5 decibels (dB) over the limit of the audiometer.

d. *Children from age 6 months to the attainment of age 2.*

(i) We need air conduction thresholds determined by a behavioral assessment, usually visual reinforcement audiometry (VRA). We can use ABR testing if the behavioral assessment cannot be completed or if the results are inconclusive or unreliable.

(ii) To determine whether your hearing loss meets 102.10A, we will average your hearing thresholds at 500, 1000, 2000, and 4000 Hz. If you do not have a response at a particular frequency, we will use a threshold of 5 dB over the limit of the audiometer.

(iii) For this age group, behavioral assessments are often performed in a sound field, and each ear is not tested separately. If each ear is not tested separately, we will consider the test results to represent the hearing in the better ear.

e. *Children from age 2 to the attainment of age 5.*

(i) We need air conduction thresholds determined by a behavioral assessment, such as conditioned play audiometry (CPA), tangible or visually reinforced operant conditioning audiometry (TROCA, VROCA), or VRA. If you have had ABR testing, we can use the results of that testing if the behavioral assessment cannot be completed or the results are inconclusive or unreliable.

(ii) To determine whether your hearing loss meets 102.10A, we will average your hearing thresholds at 500, 1000, 2000, and 4000 Hz. If you do not have a response at a particular frequency, we will use a threshold of 5 dB over the limit of the audiometer.

(iii) For this age group, behavioral assessments are often performed in a sound field and each ear is not tested separately. If each ear is not tested separately, we will consider the test results to represent the hearing in the better ear.

f. *Children from age 5 to the attainment of age 18.*

(i) We generally need pure tone air conduction and bone conduction testing, speech reception threshold (SRT) testing (also referred to as ''spondee threshold'' or ''ST'' testing), and word recognition testing (also referred to as ''word discrimination'' or ''speech discrimination'' testing). This testing must be conducted in a sound-treated booth or room and must be in accordance with the most recently published ANSI standards. Each ear must be tested separately.

(ii) To determine whether your hearing loss meets the air and bone conduction criterion in 102.10B1 or 102.10B3, we will average your hearing thresholds at 500, 1000, 2000, and 4000 Hz. If you do not have a response at a particular frequency, we will use a threshold of 5 dB over the limit of the audiometer.

(iii) The SRT is the minimum dB level required for you to recognize 50 percent of the words on a standard list of spondee words. (Spondee words are two-syllable words that have equal stress on each syllable.) The SRT is usually within 10 dB of the average pure tone air conduction hearing thresholds at 500, 1000, and 2000 Hz. If the SRT is not within 10 dB of the average pure tone air conduction threshold, the reason for the discrepancy must be documented. If we cannot determine that there is a medical basis for the discrepancy, we will not use the results of the testing to determine whether your hearing loss meets a listing.

(iv) Word recognition testing determines your ability to recognize an age-appropriate, standardized list of phonetically balanced monosyllabic words in the absence of any visual cues. This testing must be performed in quiet. The list may be recorded or presented live, but in either case, the words should be presented at a level of amplification that will measure your maximum ability to discriminate words, usually 35 to 40 dB above your SRT. However, the amplification level used in the testing must be medically appropriate, and you must be able to tolerate it. If you cannot be tested at 35 to 40 dB above your SRT, the person who performs the test should report your word recognition testing score at your highest comfortable level of amplification.

g. *Screening testing.* Physiologic testing, such as ABR and otoacoustic emissions (OAE), and pure tone testing can be used as hearing screening tests. We will not use these tests to determine that your hearing loss meets or medically equals a listing, or to assess functional limitations due to your hearing loss, when they are used only as screening tests. We can consider normal results from hearing screening tests to determine that your hearing loss is not ''severe'' when these test results are consistent with the other evidence in your case record. *See* § 416.924(c).

3. *What audiometric testing do we need when you have a cochlear implant?*

a. If you have a cochlear implant, we will consider you to be disabled until age 5, or for 1 year after initial implantation, whichever is later.

b. After that period, we need word recognition testing performed with any age-appropriate version of the Hearing in Noise Test

(HINT) or the Hearing in Noise Test for Children (HINT–C) to determine whether your impairment meets 102.11B. This testing must be conducted in quiet in a sound field. Your implant must be functioning properly and adjusted to your normal settings. The sentences should be presented at 60 dB HL (Hearing Level) and without any visual cues.

4. *How do we evaluate your word recognition ability if you are not fluent in English?*

If you are not fluent in English, you should have word recognition testing using an appropriate word list for the language in which you are most fluent. The person conducting the test should be fluent in the language used for the test. If there is no appropriate word list or no person who is fluent in the language and qualified to perform the test, it may not be possible to measure your word recognition ability. If your word recognition ability cannot be measured, your hearing loss cannot meet 102.10B2 or 102.11B. Instead, we will consider the facts of your case to determine whether you have difficulty understanding words in the language in which you are most fluent, and if so, whether that degree of difficulty medically equals 102.10B2 or 102.11B. For example, we will consider how you interact with family members, interpreters, and other persons who speak the language in which you are most fluent.

5. *What do we mean by a marked limitation in speech or language as used in 102.10B3?*

a. We will consider you to have a marked limitation in speech if:

(i) Entire phrases or sentences in your conversation are intelligible to unfamiliar listeners at least 50 percent (half) of the time but no more than 67 percent (two-thirds) of the time on your first attempt; and

(ii) Your sound production or phonological patterns (the ways in which you combine speech sounds) are atypical for your age.

b. We will consider you to have a marked limitation in language when your current and valid test score on an appropriate comprehensive, standardized test of overall language functioning is at least two standard deviations below the mean. In addition, the evidence of your daily communication functioning must be consistent with your test score. If you are not fluent in English, it may not be possible to test your language performance. If we cannot test your language performance, your hearing loss cannot meet 102.10B3. Instead, we will consider the facts of your case to determine whether your hearing loss medically equals 102.10B3.

102.01 *Category of Impairments, Special Senses and Speech*

102.02 *Loss of central visual acuity.*

A. Remaining vision in the better eye after best correction is 20/200 or less.

OR

B. An inability to participate in visual acuity testing using Snellen methodology or other comparable testing, clinical findings that fixation and visual-following behavior are absent in the better eye, and one of the following:

1. Abnormal anatomical findings indicating a visual acuity of 20/200 or less in the better eye (such as the presence of Stage III or worse retinopathy of prematurity despite surgery, hypoplasia of the optic nerve, albinism with macular aplasia, or bilateral optic atrophy); or

2. Abnormal neuroimaging documenting damage to the cerebral cortex which would be expected to prevent the development of a visual acuity better than 20/200 in the better eye (such as neuroimaging showing bilateral encephalomyelitis or bilateral encephalomalacia); or

3. Abnormal electroretinogram documenting the presence of Leber's congenital amaurosis or achromatopsia in the better eye; or

4. An absent response to VER testing in the better eye.

102.03 *Contraction of the visual field in the better eye*, with:

A. The widest diameter subtending an angle around the point of fixation no greater than 20 degrees.

OR

B. An MD of 22 decibels or greater, determined by automated static threshold perimetry that measures the central 30 degrees of the visual field (see 102.00A6d.).

OR

C. A visual field efficiency of 20 percent or less, determined by kinetic perimetry (see 102.00A7c).

102.04 *Loss of visual efficiency, or visual impairment, in the better eye:*

A. A visual efficiency percentage of 20 or less after best correction (see 102.00A7d.).

OR

B. A visual impairment value of 1.00 or greater after best correction (see 102.00A8d).

102.10 *Hearing loss not treated with cochlear implantation.*

A. For children from birth to the attainment of age 5, an average air conduction hearing threshold of 50 decibels or greater in the better ear (see 102.00B2).

OR

B. For children from age 5 to the attainment of age 18:

1. An average air conduction hearing threshold of 70 decibels or greater in the better ear and an average bone conduction hearing threshold of 40 decibels or greater in the better ear (see 102.00B2f); or

2. A word recognition score of 40 percent or less in the better ear determined using a standardized list of phonetically balanced monosyllabic words (see 102.00B2f); or

3. An average air conduction hearing threshold of 50 decibels or greater in the better ear and a marked limitation in speech or language (see 102.00B2f and 102.00B5).

102.11 *Hearing loss treated with cochlear implantation.*

A. Consider under a disability until the attainment of age 5 or for 1 year after initial implantation, whichever is later.

OR

B. Upon the attainment of age 5 or 1 year after initial implantation, whichever is later, a word recognition score of 60 percent or less determined using the HINT or the HINT–C (*see* 102.00B3b).

103.00 Respiratory System

A. *Introduction.* The listings in this section describe impairments resulting from respiratory disorder based on symptoms, physical signs, laboratory test abnormalities, and response to a regimen of treatment prescribed by a treating source. Respiratory disorders, along with any associated impairment(s) must be established by medical evidence. Evidence must be provided in sufficient detail to permit an independent reviewer to evaluate the severity of the impairment. Reasonable efforts should be made to ensure evaluation by a program physician specializing in childhood respiratory impairments or a qualified pediatrician.

Many children, especially those who have listing-level impairments, will have received the benefit of medically prescribed treatment. Whenever there is such evidence, the longitudinal clinical record must include a description of the treatment prescribed by the treating source and response, in addition to information about the nature and severity of the impairment. It is important to document any prescribed treatment and response because this medical management may have improved the child's functional status. The longitudinal record should provide information regarding functional recovery, if any.

Some children will not have received ongoing treatment or have an ongoing relationship with the medical community, despite the existence of a severe impairment(s). A child who does not receive treatment may or may not be able to show an impairment that meets the criteria of these listings. Even if a child does not show that his or her impairment meets the criteria of these listings, the child may have an impairment(s) that medically or functionally equals the listings. Unless the claim can be decided favorably on the basis of the current evidence, a longitudinal record is still important because it will provide information about such things as the ongoing medical severity of the impairment, the level of the child's functioning, and the frequency, severity, and duration of symptoms. Also, the asthma listing specifically includes a requirement for continuing signs and symptoms despite a regimen of prescribed treatment.

Evaluation should include consideration of adverse effects of respiratory impairment in all relevant body systems, and especially on the child's growth and development or mental functioning, as described under the growth impairment (100.00), neurological (111.00), and mental disorders (112.00) listings.

It must be remembered that these listings are only examples of common respiratory disorders that are severe enough to find a child disabled. When a child has a medically determinable impairment that is not listed, an impairment that does not meet the requirements of a listing, or a combination of impairments no one of which meets the requirements of a listing, we will make a determination whether the child's impairment(s) medically or functionally equals the listings. (See §§404.1526, 416.926, and 416.926a.)

B. *Documentation of Pulmonary Function Testing.* The results of spirometry that are used for adjudication, under the 103.02 A and B, 103.03, and 103.04 of these listings should be expressed in liters (L), body temperature and pressure saturated with water vapor (BTPS). The reported one-second forced expiratory volume (FEV_1) and forced vital capacity (FVC) should represent the largest of at least three satisfactory forced expiratory maneuvers. Two of the satisfactory spirograms should be reproducible for both pre-bronchodilator tests and, if indicated, post-bronchodilator tests. A value is considered reproducible if it does not differ from the largest value by more than 5 percent or 0.1 L, whichever is greater. The highest values of the FEV_1 and FVC, whether from the same or different tracings, should be used to assess the severity of the respiratory impairment. Peak flow should be achieved early in expiration, and the spirogram should have a smooth contour with gradually decreasing flow throughout expiration. The zero time for measurement of the FEV_1 and FVC, if not distinct, should be derived by linear back-extrapolation of peak flow to zero volume. A spirogram is satisfactory for measurement of the FEV_1 if the expiratory volume at the back-extrapolated zero time is less than 5 percent of the FVC or 0.1 L, whichever is greater. The spirogram is satisfactory for measurement of the FVC if maximal expiratory effort continues for at least 6 seconds, or if there is a plateau in the volume-time curve with no detectable change in expired volume (VE) during the last 2 seconds of maximal expiratory effort.

Spirometry should be repeated after administration of an aerosolized bronchodilator under supervision of the testing personnel if the pre-bronchodilator FEV_1 value is less than the appropriate reference value in table I or III, as appropriate. If a bronchodilator is not administered, the reason

should be clearly stated in the report. Pulmonary function studies should not be performed unless the clinical status is stable (e.g., the child is not having an asthmatic attack or suffering from an acute respiratory infection or other chronic illness). Wheezing is common in asthma, chronic bronchitis, or chronic obstructive pulmonary disease and does not preclude testing. Pulmonary function studies performed to assess airflow obstruction without testing after bronchodilators cannot be used to assess levels of impairment in the range that prevents a child from performing age-appropriate activities, unless the use of bronchodilators is contraindicated. Post-bronchodilator testing should be performed 10 minutes after bronchodilator administration. The dose and name of the bronchodilator administered should be specified. The values in 103.02 and 103.04 must only be used as criteria for the level of ventilatory impairment that exists during the child's most stable state of health (*i.e.*, any period in time except during or shortly after an exacerbation).

The appropriately labeled spirometric tracing, showing the child's name, date of testing, distance per second on the abscissa and distance per liter (L) on the ordinate, must be incorporated into the file. The manufacturer and model number of the device used to measure and record the spirogram should be stated. The testing device must accurately measure both time and volume, the latter to within 1 percent of a 3 L calibrating volume. If the spirogram was generated by any means other than direct pen linkage to a mechanical displacement-type spirometer, the testing device must have had a recorded calibration performed previously on the day of the spirometric measurement.

If the spirometer directly measures flow, and volume is derived by electronic integration, the linearity of the device must be documented by recording volume calibrations at three different flow rates of approximately 30 L/min (3 L/6 sec), 60 L/min (3 L/3 sec), and 180 L/min (3 L/sec). The volume calibrations should agree to within 1 percent of a 3 L calibrating volume. The proximity of the flow sensor to the child should be noted, and it should be stated whether or not a BTPS correction factor was used for the calibration recordings and for the child's actual spirograms.

The spirogram must be recorded at a speed of at least 20 mm/sec and the recording device must provide a volume excursion of at least 10 mm/L. If reproductions of the original spirometric tracings are submitted, they must be legible and have a time scale of at least 20 mm/sec and a volume scale of at least 10 mm/L to permit independent measurements. Calculation of FEV_1 from a flow volume tracing is not acceptable, *i.e.*, the spirogram and calibrations must be presented in a volume-time format at a speed of at least 20 mm/sec and a volume excursion of at least 10 mm/L to permit independent evaluation.

A statement should be made in the pulmonary function test report of the child's ability to understand directions, as well as his or her efforts and cooperation in performing the pulmonary function tests.

Purchase of a pulmonary function test is appropriate only when the child is capable of performing reproducible forced expiratory maneuvers. This capability usually occurs around age 6. Purchase of a pulmonary function test may be appropriate when there is a question of whether an impairment meets or is equivalent in severity to a listing, and the claim cannot otherwise be favorably decided.

The pulmonary function tables in 103.02 and 103.04 are based on measurement of standing height without shoes. If a child has marked spinal deformities (e.g., kyphoscoliosis), the measured span between the fingertips with the upper extremities abducted 90 degrees should be substituted for height when this measurement is greater than the standing height without shoes.

C. *Documentation of chronic impairment of gas exchange.*

1. *Arterial blood gas studies (ABGS).* An ABGS performed at rest (while breathing room air, awake and sitting or standing) should be analyzed in a laboratory certified by a State or Federal agency. If the laboratory is not certified, it must submit evidence of participation in a national proficiency testing program as well as acceptable quality control at the time of testing. The report should include the altitude of the facility and the barometric pressure on the date of analysis.

Purchase of resting ABGS may be appropriate when there is a question of whether an impairment meets or is equivalent in severity to a listing, and the claim cannot otherwise be favorably decided. Before purchasing resting ABGS, a program physician, preferably one experienced in the care of children with pulmonary disease, must review the clinical and laboratory data short of this procedure, including spirometry, to determine whether obtaining the test would present a significant risk to the child.

2. *Oximetry.* Pulse oximetry may be substituted for arterial blood gases in children under 12 years of age. The oximetry unit should employ the basic technology of spectrophotometric plethysmography as described in Taylor, M.B., and Whitwain, J.G., ''Current Status of Pulse Oximetry,'' ''Anesthesia,'' Vol. 41, No. 9, pp. 943–949, 1986. The unit should provide a visual display of the pulse signal and the corresponding oxygen saturation. A hard copy of the readings (heart rate and saturation) should be provided. Readings should be obtained for a minimum of 5 minutes. The written report should describe patient activity during the

recording, *i.e.*, sleep rate, feeding, or exercise. Correlation between the actual heart rate determined by a trained observer and that displayed by the oximeter should be provided. A statement should be made in the report of the child's effort and cooperation during the test.

Purchase of oximetry may be appropriate when there is a question of whether an impairment meets or is equivalent in severity to a listing, and the claim cannot otherwise be favorably decided.

D. *Cystic fibrosis* is a disorder that affects either the respiratory or digestive body systems or both and may impact on a child's growth and development. It is responsible for a wide and variable spectrum of clinical manifestations and complications. Confirmation of the diagnosis is based upon an elevated sweat sodium concentration or chloride concentration accompanied by one or more of the following: the presence of chronic obstructive pulmonary disease, insufficiency of exocrine pancreatic function, meconium ileus, or a positive family history. The quantitative pilocarpine iontophoresis procedure for collection of sweat content must be utilized. Two methods are acceptable: the ''Procedure for the Quantitative Iontophoretic Sweat Test for Cystic Fibrosis,'' published by the Cystic Fibrosis Foundation and contained in, ''A Test for Concentration of Electrolytes in Sweat in Cystic Fibrosis of the Pancreas Utilizing Pilocarpine Iontophoresis,'' Gibson, I.E., and Cooke, R.E., ''Pediatrics,'' Vol 23: 545, 1959; or the ''Wescor Macroduct System.'' To establish the diagnosis of cystic fibrosis, the sweat sodium or chloride content must be analyzed quantitatively using an acceptable laboratory technique. Another diagnostic test is the ''CF gene mutation analysis'' for homozygosity of the cystic fibrosis gene. The pulmonary manifestations of this disorder should be evaluated under 103.04. The nonpulmonary aspects of cystic fibrosis should be evaluated under the listings for the digestive system (105.00) or growth impairments (100.00). Because cystic fibrosis may involve the respiratory and digestive body systems, as well as impact on a child's growth and development, the combined effects of this involvement must be considered in case adjudication.

Medically acceptable imaging includes, but is not limited to, x-ray imaging, computerized axial tomography (CAT scan) or magnetic resonance imaging (MRI), with or without contrast material, myelography, and radionuclear bone scans. ''Appropriate'' means that the technique used is the proper one to support the evaluation and diagnosis of the impairment.

E. *Bronchopulmonary dysplasia (BPD).* Bronchopulmonary dysplasia is a form of chronic obstructive pulmonary disease that arises as a consequence of acute lung injury in the newborn period and treatment of hyaline membrane disease, meconium aspiration, neonatal pneumonia and apnea of prematurity. The diagnosis is established by the requirement for continuous or nocturnal supplemental oxygen for more than 30 days, in association with characteristic changes on medically acceptable imaging and clinical signs of respiratory dysfunction, including retractions, rales, wheezing, and tachypnea.

103.01 Category of Impairments, Respiratory System

103.02 *Chronic pulmonary insufficiency*. With:

A. Chronic obstructive pulmonary disease, due to any cause, with the FEV_1 equal to or less than the value specified in table I corresponding to the child's height without shoes. (In cases of marked spinal deformity, see 103.00B.);

TABLE I

Height without shoes (centimeters)	Height without shoes (inches)	FEV_1 equal to or less than (L, BTPS)
119 or less	46 or less	0.65
120–129	47–50	0.75
130–139	51–54	0.95
140–149	55–58	1.15
150–159	59–62	1.35
160–164	63–64	1.45
165–169	65–66	1.55
170 or more	67 or more	1.65

Or

B. Chronic restrictive ventilatory disease, due to any cause, with the FVC equal to or less than the value specified in table II corresponding to the child's height without shoes. (In cases of marked spinal deformity, see 103.00B.);

TABLE II

Height without shoes (centimeters)	Height without shoes (inches)	FVC equal to or less than (L, BTPS)
119 or less	46 or less	0.65
120–129	47–50	0.85
130–139	51–54	1.05
140–149	55–58	1.25
150–159	59–62	1.45
160–164	63–64	1.65
165–169	65–66	1.75
170 or more	67 or more	2.05

Or

C. Frequent need for:

1. Mechanical ventilation; or

2. Nocturnal supplemental oxygen as required by persistent or recurrent episodes of hypoxemia;

Or

D. The presence of a tracheostomy in a child under 3 years of age;

Or

E. Bronchopulmonary dysplasia characterized by two of the following:

1. Prolonged expirations; or

2. Intermittent wheezing or increased respiratory effort as evidenced by retractions, flaring and tachypnea; or

3. Hyperinflation and scarring on a chest radiograph or other appropriate imaging techniques; or

4. Bronchodilator or diuretic dependency; or

5. A frequent requirement for nocturnal supplemental oxygen; or

6. Weight disturbance with:

a. An involuntary weight loss (or failure to gain weight at an appropriate rate for age) resulting in a fall of 15 percentiles from established growth curve (on standard growth charts) which persists for 2 months or longer; or

b. An involuntary weight loss (or failure to gain weight at an appropriate rate for age) resulting in a fall to below the third percentile from established growth curve (on standard growth charts) which persists for 2 months or longer;

Or

F. Two required hospital admissions (each longer than 24 hours) within a 6-month period for recurrent lower respiratory tract infections or acute respiratory distress associated with:

1. Chronic wheezing or chronic respiratory distress; or

2. Weight disturbance with:

a. An involuntary weight loss (or failure to gain weight at an appropriate rate for age) resulting in a fall of 15 percentiles from established growth curve (on standard growth charts) which persists for 2 months or longer; or

b. An involuntary weight loss (or failure to gain weight at an appropriate rate for age) resulting in a fall to below the third percentile from established growth curve (on standard growth charts) which persists for 2 months or longer;

Or

G. Chronic hypoventilation ($PaCO_2$ greater than 45 mm Hg) or chronic cor pulmonale as described under the appropriate criteria in 104.02;

Or

H. Growth impairment as described under the criteria in 100.00.

103.03 *Asthma*. With:

A. FEV_1 equal to or less than the value specified in table I of 103.02A;

Or

B. Attacks (as defined in 3.00C), in spite of prescribed treatment and requiring physician intervention, occurring at least once every 2 months or at least six times a year. Each inpatient hospitalization for longer than 24 hours for control of asthma counts as two attacks, and an evaluation period of at least 12 consecutive months must be used to determine the frequency of attacks;

Or

C. Persistent low-grade wheezing between acute attacks or absence of extended symptom-free periods requiring daytime and nocturnal use of sympathomimetic bronchodilators with one of the following:

1. Persistent prolonged expiration with radiographic or other appropriate imaging techniques evidence of pulmonary hyperinflation or peribronchial disease; or

2. Short courses of corticosteroids that average more than 5 days per month for at least 3 months during a 12-month period;

Or

D. Growth impairment as described under the criteria in 100.00.

103.04 *Cystic fibrosis*. With:

A. An FEV_1 equal to or less than the appropriate value specified in table III corresponding to the child's height without shoes. (In cases of marked spinal deformity, see 103.00B.);

Or

B. For children in whom pulmonary function testing cannot be performed, the presence of two of the following:

1. History of dyspnea on exertion or accumulation of secretions as manifested by repetitive coughing or cyanosis; or

2. Persistent bilateral rales and rhonchi or substantial reduction of breath sounds related to mucous plugging of the trachea or bronchi; or

3. Appropriate medically acceptable imaging evidence of extensive disease, such as thickening of the proximal bronchial airways or persistence of bilateral peribronchial infiltrates;

Or

C. Persistent pulmonary infection accompanied by superimposed, recurrent, symptomatic episodes of increased bacterial infection occurring at least once every 6 months and requiring intravenous or nebulization antimicrobial treatment;

Or

D. Episodes of bronchitis or pneumonia or hemoptysis (more than blood-streaked sputum) or respiratory failure (documented according to 3.00C), requiring physician intervention, occurring at least once every 2 months or at least six times a year. Each inpatient hospitalization for longer than 24 hours for treatment counts as two episodes, and an evaluation period of at least 12 consecutive months must be used to determine the frequency of episodes;

Or

E. Growth impairment as described under the criteria in 100.00.

TABLE III

[Applicable only for evaluation under 103.04A—cystic fibrosis]

Height without shoes (centimeters)	Height without shoes (inches)	FEV_1 equal to or less than (L, BTPS)
119 or less	46 or less	0.75
120–129	47–50	0.85
130–139	51–54	1.05
140–149	55–58	1.35
150–159	59–62	1.55
160–164	63–64	1.85
165–169	65–66	2.05
170 or more	67 or more	2.25

103.05 *Lung transplant*. Consider under a disability for 12 months following the date of surgery; thereafter, evaluate the residual impairment(s).

104.00 CARDIOVASCULAR SYSTEM

A. General

1. *What do we mean by a cardiovascular impairment?*

a. We mean any disorder that affects the proper functioning of the heart or the circulatory system (that is, arteries, veins, capillaries, and the lymphatic drainage). The disorder can be congenital or acquired.

b. Cardiovascular impairment results from one or more of four consequences of heart disease:

(i) Chronic heart failure or ventricular dysfunction.

(ii) Discomfort or pain due to myocardial ischemia, with or without necrosis of heart muscle.

(iii) Syncope, or near syncope, due to inadequate cerebral perfusion from any cardiac cause, such as obstruction of flow or disturbance in rhythm or conduction resulting in inadequate cardiac output.

(iv) Central cyanosis due to right-to-left shunt, reduced oxygen concentration in the arterial blood, or pulmonary vascular disease.

c. Disorders of the veins or arteries (for example, obstruction, rupture, or aneurysm) may cause impairments of the lower extremities (peripheral vascular disease), the central nervous system, the eyes, the kidneys, and other organs. We will evaluate peripheral vascular disease under 4.11 or 4.12 in part A, and impairments of another body system(s) under the listings for that body system(s).

2. *What do we consider in evaluating cardiovascular impairments?* The listings in this section describe cardiovascular impairments based on symptoms, signs, laboratory findings, response to a regimen of prescribed treatment, and functional limitations.

3. *What do the following terms or phrases mean in these listings?*

a. *Medical consultant* is an individual defined in §§404.1616(a) and 416.1016(a). This term does not include medical sources who provide consultative examinations for us. We use the abbreviation ''MC'' throughout this section to designate a medical consultant.

b. *Persistent* means that the longitudinal clinical record shows that, with few exceptions, the required finding(s) has been present, or is expected to be present, for a continuous period of at least 12 months, such that a pattern of continuing severity is established.

c. *Recurrent* means that the longitudinal clinical record shows that, within a consecutive 12-month period, the finding(s) occurs at least three times, with intervening periods of improvement of sufficient duration that it is clear that separate events are involved.

d. *Appropriate medically acceptable imaging* means that the technique used is the proper one to evaluate and diagnose the impairment and is commonly recognized as accurate for assessing the cited finding.

e. *A consecutive 12-month period* means a period of 12 consecutive months, all or part of which must occur within the period we are considering in connection with an application or continuing disability review.

f. *Currently present* means that the finding is present at the time of adjudication.

g. *Uncontrolled* means the impairment does not respond adequately to standard prescribed medical treatment.

B. Documenting Cardiovascular Impairment

1. *What basic documentation do we need?* We need sufficiently detailed reports of history, physical examinations, laboratory studies, and any prescribed treatment and response to allow us to assess the severity and duration of your cardiovascular impairment. A longitudinal clinical record covering a period of not less than 3 months of observations and treatment is usually necessary, unless we can make a determination or decision based on the current evidence.

2. *Why is a longitudinal clinical record important?* We will usually need a longitudinal clinical record to assess the severity and expected duration of your impairment(s). If you have a listing-level impairment, you probably will have received medically prescribed treatment. Whenever there is evidence of such treatment, your longitudinal clinical record should include a description of the ongoing management and evaluation provided by your treating or other medical source. It should also include your response to this medical management, as well as information about the nature and severity of your impairment. The record will provide us with information on your functional status

over an extended period of time and show whether your ability to function is improving, worsening, or unchanging.

3. *What if you have not received ongoing medical treatment?*

a. You may not have received ongoing treatment or have an ongoing relationship with the medical community despite the existence of a severe impairment(s). In this situation, we will base our evaluation on the current objective medical evidence and the other evidence we have. If you do not receive treatment, you cannot show an impairment that meets the criteria of these listings. However, we may find you disabled because you have another impairment(s) that in combination with your cardiovascular impairment medically equals the severity of a listed impairment or that functionally equals the listings.

b. Unless we can decide your claim favorably on the basis of the current evidence, a longitudinal record is still important. In rare instances where there is no or insufficient longitudinal evidence, we may purchase a consultative examination(s) to help us establish the severity and duration of your impairment.

4. *When will we wait before we ask for more evidence?*

a. We will wait when we have information showing that your impairment is not yet stable and the expected change in your impairment might affect our determination or decision. In these situations, we need to wait to properly evaluate the severity and duration of your impairment during a stable period. Examples of when we might wait are:

(i) If you have had a recent acute event; for example, acute rheumatic fever.

(ii) If you have recently had a corrective cardiac procedure; for example, open-heart surgery.

(iii) If you have started new drug therapy and your response to this treatment has not yet been established; for example, beta-blocker therapy for dilated congestive cardiomyopathy.

b. In these situations, we will obtain more evidence 3 months following the event before we evaluate your impairment. However, we will not wait if we have enough information to make a determination or decision based on all of the relevant evidence in your case.

5. *Will we purchase any studies?* In appropriate situations, we will purchase studies necessary to substantiate the diagnosis or to document the severity of your impairment, generally after we have evaluated the medical and other evidence we already have. We will not purchase studies involving exercise testing if there is significant risk involved or if there is another medical reason not to perform the test. We will follow sections 4.00C6, 4.00C7, 4.00C8, and 104.00B7 when we decide whether to purchase exercise testing. We will make a reasonable effort to obtain any additional studies from a qualified medical source in an office or center experienced in pediatric cardiac assessment. (See §416.919g.)

6. *What studies will we not purchase?* We will not purchase any studies involving cardiac catheterization, such as coronary angiography, arteriograms, or electrophysiological studies. However, if the results of catheterization are part of the existing evidence we have, we will consider them together with the other relevant evidence. See 4.00C15a in part A.

7. *Will we use exercise tolerance tests (ETTs) for evaluating children with cardiovascular impairment?*

a. ETTs, though increasingly used, are still less frequently indicated in children than in adults, and can rarely be performed successfully by children under 6 years of age. An ETT may be of value in the assessment of some arrhythmias, in the assessment of the severity of chronic heart failure, and in the assessment of recovery of function following cardiac surgery or other treatment.

b. We will purchase an ETT in a childhood claim only if we cannot make a determination or decision based on the evidence we have and an MC, preferably one with experience in the care of children with cardiovascular impairments, has determined that an ETT is needed to evaluate your impairment. We will not purchase an ETT if you are less than 6 years of age. If we do purchase an ETT for a child age 12 or younger, it must be performed by a qualified medical source in a specialty center for pediatric cardiology or other facility qualified to perform exercise tests of children.

c. For full details on ETT requirements and usage, see 4.00C in part A.

C. Evaluating Chronic Heart Failure

1. *What is chronic heart failure (CHF)?*

a. *CHF* is the inability of the heart to pump enough oxygenated blood to body tissues. This syndrome is characterized by symptoms and signs of pulmonary or systemic congestion (fluid retention) or limited cardiac output. Certain laboratory findings of cardiac functional and structural abnormality support the diagnosis of CHF.

b. CHF is considered in these listings as a single category whether due to atherosclerosis (narrowing of the arteries), cardiomyopathy, hypertension, or rheumatic, congenital, or other heart disease. However, if the CHF is the result of primary pulmonary hypertension secondary to disease of the lung (cor pulmonale), we will evaluate your impairment using 3.09 in the respiratory system listings in part A.

2. *What evidence of CHF do we need?*

a. Cardiomegaly or ventricular dysfunction must be present and demonstrated by appropriate medically acceptable imaging, such as

chest x-ray, echocardiography (M-Mode, 2-dimensional, and Doppler), radionuclide studies, or cardiac catheterization.

(i) Cardiomegaly is present when:

(*A*) Left ventricular diastolic dimension or systolic dimension is greater than 2 standard deviations above the mean for the child's body surface area;

(*B*) Left ventricular mass is greater than 2 standard deviations above the mean for the child's body surface area; or

(*C*) Chest x-ray (6 foot PA film) is indicative of cardiomegaly if the cardiothoracic ratio is over 60 percent at 1 year of age or less, or 55 percent or greater at more than 1 year of age.

(ii) Ventricular dysfunction is present when indices of left ventricular function, such as fractional shortening or ejection fraction (the percentage of the blood in the ventricle actually pumped out with each contraction), are greater than 2 standard deviations below the mean for the child's age. (Fractional shortening, also called shortening fraction, reflects the left ventricular systolic function in the absence of segmental wall motion abnormalities and has a linear correlation with ejection fraction. In children, fractional shortening is more commonly used than ejection fraction.)

(iii) However, these measurements alone do not reflect your functional capacity, which we evaluate by considering all of the relevant evidence.

(iv) Other findings on appropriate medically acceptable imaging may include increased pulmonary vascular markings, pleural effusion, and pulmonary edema. These findings need not be present on each report, since CHF may be controlled by prescribed treatment.

b. To establish that you have *chronic* heart failure, your medical history and physical examination should describe characteristic symptoms and signs of pulmonary or systemic congestion or of limited cardiac output associated with the abnormal findings on appropriate medically acceptable imaging. When an acute episode of heart failure is triggered by a remediable factor, such as an arrhythmia, dietary sodium overload, or high altitude, cardiac function may be restored and a chronic impairment may not be present.

(i) Symptoms of congestion or of limited cardiac output include easy fatigue, weakness, shortness of breath (dyspnea), cough, or chest discomfort at rest or with activity. Children with CHF may also experience shortness of breath on lying flat (orthopnea) or episodes of shortness of breath that wake them from sleep (paroxysmal nocturnal dyspnea). They may also experience cardiac arrhythmias resulting in palpitations, lightheadedness, or fainting. Fatigue or exercise intolerance in an infant may be manifested by prolonged feeding time, often associated with excessive respiratory effort and sweating.

(ii) During infancy, other manifestations of chronic heart failure may include failure to gain weight or involuntary loss of weight and repeated lower respiratory tract infections.

(iii) Signs of congestion may include hepatomegaly, ascites, increased jugular venous distention or pressure, rales, peripheral edema, rapid shallow breathing (tachypnea), or rapid weight gain. However, these signs need not be found on all examinations because fluid retention may be controlled by prescribed treatment.

D. Evaluating Congenital Heart Disease

1. *What is congenital heart disease?* Congenital heart disease is any abnormality of the heart or the major blood vessels that is present at birth. Examples include:

a. *Abnormalities of cardiac septation*, including ventricular septal defect or atrioventricular canal;

b. *Abnormalities resulting in cyanotic heart disease*, including tetralogy of Fallot or transposition of the great arteries;

c. *Valvular defects or obstructions to ventricular outflow*, including pulmonary or aortic stenosis or coarctation of the aorta; and

d. *Major abnormalities of ventricular development*, including hypoplastic left heart syndrome or pulmonary tricuspid atresia with hypoplastic right ventricle.

2. *How will we evaluate symptomatic congenital heart disease?*

a. Because of improved treatment methods, more children with congenital heart disease are living longer. Although some types of congenital heart disease may be corrected by surgery, many children with treated congenital heart disease continue to have problems throughout their lives (symptomatic congenital heart disease). If you have congenital heart disease that results in chronic heart failure with evidence of ventricular dysfunction or in recurrent arrhythmias, we will evaluate your impairment under 104.02 or 104.05. Otherwise, we will evaluate your impairment under 104.06.

b. For 104.06A2, we will accept pulse oximetry measurements instead of arterial O_2, but the arterial O_2 values are preferred, if available.

c. For 104.06D, examples of impairments that in most instances will require life-saving surgery or a combination of surgery and other major interventional procedures (for example, multiple ''balloon'' catheter procedures) before age 1 include, but are not limited to, the following:

(i) Hypoplastic left heart syndrome,

(ii) Critical aortic stenosis with neonatal heart failure,

(iii) Critical coarctation of the aorta, with or without associated anomalies,

(iv) Complete atrioventricular canal defects,

(v) Transposition of the great arteries,

(vi) Tetralogy of Fallot,

(vii) Pulmonary atresia with intact ventricular septum,

(viii) Single ventricle,

(ix) Tricuspid atresia, and

(x) Multiple ventricular septal defects.

E. Evaluating Arrhythmias

1. *What is an arrhythmia?* An *arrhythmia* is a change in the regular beat of the heart. Your heart may seem to skip a beat or beat irregularly, very quickly (tachycardia), or very slowly (bradycardia).

2. *What are the different types of arrhythmias?*

a. There are many types of arrhythmias. Arrhythmias are identified by where they occur in the heart (atria or ventricles) and by what happens to the heart's rhythm when they occur.

b. Arrhythmias arising in the cardiac atria (upper chambers of the heart) are called atrial or supraventricular arrhythmias. Ventricular arrhythmias begin in the ventricles (lower chambers). In general, ventricular arrhythmias caused by heart disease are the most serious.

3. *How do we evaluate arrhythmias using 104.05?*

a. We will use 104.05 when you have arrhythmias that are not fully controlled by medication, an implanted pacemaker, or an implanted cardiac defibrillator and you have uncontrolled recurrent episodes of syncope or near syncope. If your arrhythmias are controlled, we will evaluate your underlying heart disease using the appropriate listing. For other considerations when we evaluate arrhythmias in the presence of an implanted cardiac defibrillator, see 104.00E4.

b. We consider *near syncope* to be a period of altered consciousness, since syncope is a loss of consciousness or a faint. It is not merely a feeling of light-headedness, momentary weakness, or dizziness.

c. For purposes of 104.05, there must be a documented association between the syncope or near syncope and the recurrent arrhythmia. The recurrent arrhythmia, not some other cardiac or non-cardiac disorder, must be established as the cause of the associated symptom. This documentation of the association between the symptoms and the arrhythmia may come from the usual diagnostic methods, including Holter monitoring (also called ambulatory electrocardiography) and tilt-table testing with a concurrent ECG. Although an arrhythmia may be a coincidental finding on an ETT, we will not purchase an ETT to document the presence of a cardiac arrhythmia.

4. *What will we consider when you have an implanted cardiac defibrillator and you do not have arrhythmias that meet the requirements of 104.05?*

a. Implanted cardiac defibrillators are used to prevent sudden cardiac death in children who have had, or are at high risk for, cardiac arrest from life-threatening ventricular arrhythmias. The largest group of children at risk for sudden cardiac death consists of children with cardiomyopathy (ischemic or non-ischemic) and reduced ventricular function. However, life-threatening ventricular arrhythmias can also occur in children with little or no ventricular dysfunction. The shock from the implanted cardiac defibrillator is a unique form of treatment; it rescues a child from what may have been cardiac arrest. However, as a consequence of the shock(s), children may experience psychological distress, which we may evaluate under the mental disorders listings in 112.00ff.

b. Most implantable cardiac defibrillators have rhythm-correcting and pacemaker capabilities. In some children, these functions may result in the termination of ventricular arrhythmias without an otherwise painful shock. (The shock is like being kicked in the chest.) Implanted cardiac defibrillators may deliver inappropriate shocks, often repeatedly, in response to benign arrhythmias or electrical malfunction. Also, exposure to strong electrical or magnetic fields, such as from MRI (magnetic resonance imaging), can trigger or reprogram an implanted cardiac defibrillator, resulting in inappropriate shocks. We must consider the frequency of, and the reason(s) for, the shocks when evaluating the severity and duration of your impairment.

c. In general, the exercise limitations imposed on children with an implanted cardiac defibrillator are those dictated by the underlying heart impairment. However, the exercise limitations may be greater when the implanted cardiac defibrillator delivers an inappropriate shock in response to the increase in heart rate with exercise, or when there is exercise-induced ventricular arrhythmia.

F. Evaluating Other Cardiovascular Impairments

1. *What is ischemic heart disease (IHD) and how will we evaluate it in children? IHD* results when one or more of your coronary arteries is narrowed or obstructed or, in rare situations, constricted due to vasospasm, interfering with the normal flow of blood to your heart muscle (ischemia). The obstruction may be the result of an embolus, a thrombus, or plaque. When heart muscle tissue dies as a result of the reduced blood supply, it is called a myocardial infarction (heart attack). Ischemia is rare in children, but when it occurs, its effects on children are the same as on adults. If you have IHD, we will evaluate it under 4.00E and 4.04 in part A.

2. *How will we evaluate hypertension?* Because *hypertension* (high blood pressure) generally causes disability through its effects on other body systems, we will evaluate it by reference to the specific body system(s) affected (heart, brain, kidneys, or eyes) when we consider its effects under the listings. We will also consider any limitations imposed by your hypertension when we consider whether you have an impairment that functionally equals the listings.

3. *What is cardiomyopathy and how will we evaluate it? Cardiomyopathy* is a disease of the heart muscle. The heart loses its ability to pump blood (heart failure), and in some instances, heart rhythm is disturbed, leading to irregular heartbeats (arrhythmias). Usually, the exact cause of the muscle damage is never found (idiopathic cardiomyopathy). There are various types of cardiomyopathy, which fall into two major categories: *Ischemic* and *nonischemic* cardiomyopathy. Ischemic cardiomyopathy typically refers to heart muscle damage that results from coronary artery disease, including heart attacks. Nonischemic cardiomyopathy includes several types: Dilated, hypertrophic, and restrictive. We will evaluate cardiomyopathy under 4.04 in part A, 104.02, 104.05, or 111.06, depending on its effects on you.

4. *How will we evaluate valvular heart disease?* We will evaluate valvular heart disease under the listing appropriate for its effect on you. Thus, we may use 4.04 in part A, 104.02, 104.05, 104.06, or an appropriate neurological listing in 111.00ff.

5. *What do we consider when we evaluate heart transplant recipients?*

a. After your heart transplant, we will consider you disabled for 1 year following the surgery because there is a greater likelihood of rejection of the organ and infection during the first year.

b. However, heart transplant patients generally meet our definition of disability before they undergo transplantation. We will determine the onset of your disability based on the facts in your case.

c. We will not assume that you became disabled when your name was placed on a transplant waiting list. This is because you may be placed on a waiting list soon after diagnosis of the cardiac disorder that may eventually require a transplant. Physicians recognize that candidates for transplantation often have to wait months or even years before a suitable donor heart is found, so they place their patients on the list as soon as permitted.

d. When we do a continuing disability review to determine whether you are still disabled, we will evaluate your residual impairment(s), as shown by symptoms, signs, and laboratory findings, including any side effects of medication. We will consider any remaining symptoms, signs, and laboratory findings indicative of cardiac dysfunction in deciding whether medical improvement (as defined in §416.994a) has occurred.

6. *How will we evaluate chronic rheumatic fever or rheumatic heart disease?* The diagnosis should be made in accordance with the current revised Jones criteria for guidance in the diagnosis of rheumatic fever. We will evaluate persistence of rheumatic fever activity under 104.13. If you have evidence of chronic heart failure or recurrent arrhythmias associated with rheumatic heart disease, we will use 104.02 or 104.05.

7. *What is hyperlipidemia and how will we evaluate it? Hyperlipidemia* is the general term for an elevation of any or all of the lipids (fats or cholesterol) in the blood; for example, hypertriglyceridemia, hypercholesterolemia, and hyperlipoproteinemia. These disorders of lipoprotein metabolism and transport can cause defects throughout the body. The effects most likely to interfere with function are those produced by atherosclerosis (narrowing of the arteries) and coronary artery disease. We will evaluate your lipoprotein disorder by considering its effects on you.

8. *How will we evaluate Kawasaki disease?* We will evaluate Kawasaki disease under the listing appropriate to its effects on you, which may include major coronary artery aneurysm or heart failure. A major coronary artery aneurysm may cause ischemia or arrhythmia, which we will evaluate under 4.04 in part A or 104.05. We will evaluate chronic heart failure under 104.02.

9. *What is lymphedema and how will we evaluate it?*

a. *Lymphedema* is edema of the extremities due to a disorder of the lymphatic circulation; at its worst, it is called elephantiasis. Primary lymphedema is caused by abnormal development of lymph vessels and may be present at birth (congenital lymphedema), but more often develops during the teens (lymphedema praecox). Secondary lymphedema is due to obstruction or destruction of normal lymphatic channels due to tumor, surgery, repeated infections, or parasitic infection such as filariasis. Lymphedema most commonly affects one extremity.

b. Lymphedema does not meet the requirements of 4.11 in part A, although it may medically equal the severity of that listing. We will evaluate lymphedema by considering whether the underlying cause meets or medically equals any listing or whether the lymphedema medically equals a cardiovascular listing, such as 4.11, or a musculoskeletal listing, such as 101.02A or 101.03. If no listing is met or medically equaled, we will evaluate any functional limitations imposed by your lymphedema when we consider whether you have an impairment that functionally equals the listings.

10. *What is Marfan syndrome and how will we evaluate it?*

a. Marfan syndrome is a genetic connective tissue disorder that affects multiple body systems, including the skeleton, eyes, heart, blood vessels, nervous system, skin, and lungs. There is no specific laboratory test to diagnose Marfan syndrome. The diagnosis is generally made by medical history, including family history, physical examination, including an evaluation of the ratio of arm/leg size to trunk size, a slit lamp eye examination, and a heart test(s), such as an echocardiogram. In some cases, a genetic analysis may be useful, but such analyses may not provide any additional helpful information.

b. The effects of Marfan syndrome can range from mild to severe. In most cases, the disorder progresses as you age. Most individuals with Marfan syndrome have abnormalities associated with the heart and blood vessels. Your heart's mitral valve may leak, causing a heart murmur. Small leaks may not cause symptoms, but larger ones may cause shortness of breath, fatigue, and palpitations. Another effect is that the wall of the aorta may be weakened and stretch (aortic dilation). This aortic dilation may tear, dissect, or rupture, causing serious heart problems or sometimes sudden death. We will evaluate the manifestations of your Marfan syndrome under the appropriate body system criteria, such as 4.10 in part A, or if necessary consider the functional limitations imposed by your impairment.

G. Other Evaluation Issues

1. *What effect does obesity have on the cardiovascular system and how will we evaluate it?* Obesity is a medically determinable impairment that is often associated with disorders of the cardiovascular system. Disturbance of this system can be a major cause of disability in children with obesity. Obesity may affect the cardiovascular system because of the increased workload the additional body mass places on the heart. Obesity may make it harder for the chest and lungs to expand. This can mean that the respiratory system must work harder to provide needed oxygen. This in turn would make the heart work harder to pump blood to carry oxygen to the body. Because the body would be working harder at rest, its ability to perform additional work would be less than would otherwise be expected. Thus, the combined effects of obesity with cardiovascular impairments can be greater than the effects of each of the impairments considered separately. We must consider any additional and cumulative effects of obesity when we determine whether you have a severe cardiovascular impairment or a listing-level cardiovascular impairment (or a combination of impairments that medically equals a listing), and when we determine whether your impairment(s) functionally equals the listings.

2. *How do we relate treatment to functional status?* In general, conclusions about the severity of a cardiovascular impairment cannot be made on the basis of type of treatment rendered or anticipated. The amount of function restored and the time required for improvement after treatment (medical, surgical, or a prescribed program of progressive physical activity) vary with the nature and extent of the disorder, the type of treatment, and other factors. Depending upon the timing of this treatment in relation to the alleged onset date of disability, we may need to defer evaluation of the impairment for a period of up to 3 months from the date treatment began to permit consideration of treatment effects, unless we can make a determination or decision using the evidence we have. See 104.00B4.

3. *How do we evaluate impairments that do not meet one of the cardiovascular listings?*

a. These listings are only examples of common cardiovascular disorders that we consider severe enough to result in marked and severe functional limitations. If your severe impairment(s) does not meet the criteria of any of these listings, we must also consider whether you have an impairment(s) that satisfies the criteria of a listing in another body system.

b. If you have a severe medically determinable impairment(s) that does not meet a listing, we will determine whether your impairment(s) medically equals a listing. (See § 416.926.) If you have a severe impairment(s) that does not meet or medically equal the criteria of a listing, we will consider whether it functionally equals the listings. (See § 416.926a.) When we decide whether you continue to be disabled, we use the rules in § 416.994a.

104.01 Category of Impairments, Cardiovascular System

104.02. *Chronic heart failure* while on a regimen of prescribed treatment, with symptoms and signs described in 104.00C2, and with one of the following:

A. Persistent tachycardia at rest (see Table I);

OR

B. Persistent tachypnea at rest (see Table II) or markedly decreased exercise tolerance (see 104.00C2b);

OR

C. Growth disturbance with:

1. An involuntary weight loss or failure to gain weight at an appropriate rate for age, resulting in a fall of 15 percentiles from an established growth curve (on current NCHS/CDC growth chart) which is currently present (see 104.00A3f) and has persisted for 2 months or longer; or

2. An involuntary weight loss or failure to gain weight at an appropriate rate for age,

resulting in a fall to below the third percentile from an established growth curve (on current NCHS/CDC growth chart) which is currently present (see 104.00A3f) and has persisted for 2 months or longer.

TABLE I—TACHYCARDIA AT REST

Age	Apical heart rate (beats per minute)
Under 1 yr	150
1 through 3 yrs	130
4 through 9 yrs	120
10 through 15 yrs	110
Over 15 yrs	100

TABLE II—TACHYPNEA AT REST

Age	Respiratory rate over (per minute)
Under 1 yr	40
1 through 5 yrs	35
6 through 9 yrs	30
Over 9 yrs	25

104.05 *Recurrent arrhythmias*, not related to reversible causes such as electrolyte abnormalities or digitalis glycoside or antiarrhythmic drug toxicity, resulting in uncontrolled (see 104.00A3g), recurrent (see 104.00A3c) episodes of cardiac syncope or near syncope (see 104.00E3b), despite prescribed treatment (see 104.00B3 if there is no prescribed treatment), and documented by resting or ambulatory (Holter) electrocardiography, or by other appropriate medically acceptable testing, coincident with the occurrence of syncope or near syncope (see 104.00E3c).

104.06 *Congenital heart disease*, documented by appropriate medically acceptable imaging (see 104.00A3d) or cardiac catheterization, with one of the following:

A. Cyanotic heart disease, with persistent, chronic hypoxemia as manifested by:

1. Hematocrit of 55 percent or greater on two evaluations 3 months or more apart within a consecutive 12-month period (see 104.00A3e); or

2. Arterial O_2 saturation of less than 90 percent in room air, or resting arterial PO_2 of 60 Torr or less; or

3. Hypercyanotic spells, syncope, characteristic squatting, or other incapacitating symptoms directly related to documented cyanotic heart disease; or

4. Exercise intolerance with increased hypoxemia on exertion.

OR

B. Secondary pulmonary vascular obstructive disease with pulmonary arterial systolic pressure elevated to at least 70 percent of the systemic arterial systolic pressure.

OR

C. Symptomatic acyanotic heart disease, with ventricular dysfunction interfering very seriously with the ability to independently initiate, sustain, or complete activities.

OR

D. For infants under 12 months of age at the time of filing, with life-threatening congenital heart impairment that will require or already has required surgical treatment in the first year of life, and the impairment is expected to be disabling (because of residual impairment following surgery, or the recovery time required, or both) until the attainment of at least 1 year of age, consider the infant to be under disability until the attainment of at least age 1; thereafter, evaluate impairment severity with reference to the appropriate listing.

104.09 *Heart transplant*. Consider under a disability for 1 year following surgery; thereafter, evaluate residual impairment under the appropriate listing.

104.13 *Rheumatic heart disease*, with persistence of rheumatic fever activity manifested by significant murmurs(s), cardiac enlargement or ventricular dysfunction (see 104.00C2a), and other associated abnormal laboratory findings; for example, an elevated sedimentation rate or ECG findings, for 6 months or more in a consecutive 12-month period (see 104.00A3e). Consider under a disability for 18 months from the established onset of impairment, then evaluate any residual impairment(s).

105.00 DIGESTIVE SYSTEM

A. *What kinds of disorders do we consider in the digestive system?* Disorders of the digestive system include gastrointestinal hemorrhage, hepatic (liver) dysfunction, inflammatory bowel disease, short bowel syndrome, and malnutrition. They may also lead to complications, such as obstruction, or be accompanied by manifestations in other body systems. Congenital abnormalities involving the organs of the gastrointestinal system may interfere with the ability to maintain adequate nutrition, growth, and development.

B. *What documentation do we need?* We need a record of your medical evidence, including clinical and laboratory findings. The documentation should include appropriate medically acceptable imaging studies and reports of endoscopy, operations, and pathology, as appropriate to each listing, to document the severity and duration of your digestive disorder. We may also need assessments of your growth and development. Medically acceptable imaging includes, but is not limited to, x-ray imaging, sonography, computerized axial tomography (CAT scan), magnetic resonance imaging (MRI), and radionuclide scans. *Appropriate* means that the technique used is the proper one to support the evaluation and diagnosis of the disorder. The findings required by these listings must occur

within the period we are considering in connection with your application or continuing disability review.

C. *How do we consider the effects of treatment?*

1. Digestive disorders frequently respond to medical or surgical treatment; therefore, we generally consider the severity and duration of these disorders within the context of the prescribed treatment.

2. We assess the effects of treatment, including medication, therapy, surgery, or any other form of treatment you receive, by determining if there are improvements in the symptoms, signs, and laboratory findings of your digestive disorder. We also assess any side effects of your treatment that may further limit your functioning.

3. To assess the effects of your treatment, we may need information about:

a. The treatment you have been prescribed (for example, the type of medication or therapy, or your use of parenteral (intravenous) nutrition or supplemental enteral nutrition via a gastrostomy);

b. The dosage, method, and frequency of administration;

c. Your response to the treatment;

d. Any adverse effects of such treatment; and

e. The expected duration of the treatment.

4. Because the effects of treatment may be temporary or long-term, in most cases we need information about the impact of your treatment, including its expected duration and side effects, over a sufficient period of time to help us assess its outcome. When adverse effects of treatment contribute to the severity of your impairment(s), we will consider the duration or expected duration of the treatment when we assess the duration of your impairment(s).

5. If you need parenteral (intravenous) nutrition or supplemental enteral nutrition via a gastrostomy to avoid debilitating complications of a digestive disorder, this treatment will not, in itself, indicate that you have marked and severe functional limitations. The exceptions are 105.07, short bowel syndrome, and 105.10, for children who have not attained age 3 and who require supplemental daily enteral feedings via a gastrostomy (see 105.00F and 105.00H).

6. If you have not received ongoing treatment or have not had an ongoing relationship with the medical community despite the existence of a severe impairment(s), we will evaluate the severity and duration of your digestive impairment on the basis of current medical and other evidence in your case record. If you have not received treatment, you may not be able to show an impairment that meets the criteria of one of the digestive system listings, but your digestive impairment may medically equal a listing or functionally equal the listings.

D. *How do we evaluate chronic liver disease?*

1. *General. Chronic liver disease* is characterized by liver cell necrosis, inflammation, or scarring (fibrosis or cirrhosis), due to any cause, that persists for more than 6 months. Chronic liver disease may result in portal hypertension, cholestasis (suppression of bile flow), extrahepatic manifestations, or liver cancer. (We evaluate liver cancer under 113.03.) Significant loss of liver function may be manifested by hemorrhage from varices or portal hypertensive gastropathy, ascites (accumulation of fluid in the abdominal cavity), hydrothorax (ascitic fluid in the chest cavity), or encephalopathy. There can also be progressive deterioration of laboratory findings that are indicative of liver dysfunction. Liver transplantation is the only definitive cure for end stage liver disease (ESLD).

2. *Examples of chronic liver disease* include, but are not limited to, biliary atresia, chronic hepatitis, non-alcoholic steatohepatitis (NASH), primary biliary cirrhosis (PBC), primary sclerosing cholangitis (PSC), autoimmune hepatitis, hemochromatosis, drug-induced liver disease, Wilson's disease, and serum alpha-1 antitrypsin deficiency. Children can also have congenital abnormalities of abdominal organs or inborn metabolic disorders that result in chronic liver disease. Acute hepatic injury is frequently reversible as in viral, drug-induced, toxin-induced, and ischemic hepatitis. In the absence of evidence of a chronic impairment, episodes of acute liver disease do not meet 105.05.

3. *Manifestations of chronic liver disease.*

a. *Symptoms* may include, but are not limited to, pruritis (itching), fatigue, nausea, loss of appetite, or sleep disturbances. Children can also have associated developmental delays or poor school performance. Symptoms of chronic liver disease may have a poor correlation with the severity of liver disease and functional ability.

b. *Signs* may include, but are not limited to, jaundice, enlargement of the liver and spleen, ascites, peripheral edema, and altered mental status.

c. *Laboratory findings* may include, but are not limited to, increased liver enzymes, increased serum total bilirubin, increased ammonia levels, decreased serum albumin, and abnormal coagulation studies, such as increased International Normalized Ratio (INR) or decreased platelet counts. Abnormally low serum albumin or elevated INR levels indicate loss of synthetic liver function, with increased likelihood of cirrhosis and associated complications. However, other abnormal lab tests, such as liver enzymes, serum total bilirubin, or ammonia levels, may have a poor correlation with the severity of liver disease and functional ability. A liver biopsy may demonstrate the degree of liver cell necrosis, inflammation, fibrosis, and cirrhosis. If you have had a liver biopsy, we will make every reasonable effort to obtain the results; however, we will not

purchase a liver biopsy. Imaging studies (CAT scan, ultrasound, MRI) may show the size and consistency (fatty liver, scarring) of the liver and document ascites (see 105.00D6).

4. *Chronic viral hepatitis infections.*

a. *General.*

(i) *Chronic viral hepatitis* infections are commonly caused by hepatitis C virus (HCV), and to a lesser extent, hepatitis B virus (HBV). Usually, these are slowly progressive disorders that persist over many years during which the symptoms and signs are typically nonspecific, intermittent, and mild (for example, fatigue, difficulty with concentration, or right upper quadrant pain). Laboratory findings (liver enzymes, imaging studies, liver biopsy pathology) and complications are generally similar in HCV and HBV. The spectrum of these chronic viral hepatitis infections ranges widely and includes an asymptomatic state; insidious disease with mild to moderate symptoms associated with fluctuating liver tests; extrahepatic manifestations; cirrhosis, both compensated and decompensated; ESLD with the need for liver transplantation; and liver cancer. Treatment for chronic viral hepatitis infections varies considerably based on age, medication tolerance, treatment response, adverse effects of treatment, and duration of the treatment. Comorbid disorders, such as HIV infection, may affect the clinical course of viral hepatitis infection(s) or may alter the response to medical treatment.

(ii) We evaluate all types of chronic viral hepatitis infections under 105.05 or any listing in an affected body system(s). If your impairment(s) does not meet or medically equal a listing, we will consider the effects of your hepatitis when we assess whether your impairment(s) functionally equals the listings.

b. *Chronic hepatitis B virus (HBV) infection.*

(i) *Chronic HBV* infection is diagnosed by the detection of hepatitis B surface antigen (HBsAg) in the blood for at least 6 months. In addition, detection of the hepatitis B envelope antigen (HBeAg) suggests an increased likelihood of progression to cirrhosis and ESLD.

(ii) The therapeutic goal of treatment is to suppress HBV replication and thereby prevent progression to cirrhosis and ESLD. Treatment usually includes a combination of interferon injections and oral antiviral agents. Common adverse effects of treatment are the same as noted in 105.00D4c(ii) for HCV, and generally end within a few days after treatment is discontinued.

c. *Chronic hepatitis C virus (HCV) infection.*

(i) *Chronic HCV infection* is diagnosed by the detection of hepatitis C viral RNA in the blood for at least 6 months. Documentation of the therapeutic response to treatment is also monitored by the quantitative assay of serum HCV RNA (''HCV viral load''). Treatment usually includes a combination of interferon injections and oral ribavirin; whether a therapeutic response has occurred is usually assessed after 12 weeks of treatment by checking the HCV viral load. If there has been a substantial reduction in HCV viral load (also known as early viral response, or EVR), this reduction is predictive of a sustained viral response with completion of treatment. Combined therapy is commonly discontinued after 12 weeks when there is no early viral response, since in that circumstance there is little chance of obtaining a sustained viral response (SVR). Otherwise, treatment is usually continued for a total of 48 weeks.

(ii) Combined interferon and ribavirin treatment may have significant adverse effects that may require dosing reduction, planned interruption of treatment, or discontinuation of treatment. Adverse effects may include: Anemia (ribavirin-induced hemolysis), neutropenia, thrombocytopenia, fever, cough, fatigue, myalgia, arthralgia, nausea, loss of appetite, pruritis, and insomnia. Behavioral side effects may also occur. Influenza-like symptoms are generally worse in the first 4 to 6 hours after each interferon injection and during the first weeks of treatment. Adverse effects generally end within a few days after treatment is discontinued.

d. *Extrahepatic manifestations of HBV and HCV.* In addition to their hepatic manifestations, both HBV and HCV may have significant extrahepatic manifestations in a variety of body systems. These include, but are not limited to: Keratoconjunctivitis (sicca syndrome), glomerulonephritis, skin disorders (for example, lichen planus, porphyria cutanea tarda), neuropathy, and immune dysfunction (for example, cryoglobulinemia, Sjögren's syndrome, and vasculitis). The extrahepatic manifestations of HBV and HCV may not correlate with the severity of your hepatic impairment. If your impairment(s) does not meet or medically equal a listing in an affected body system(s), we will consider the effects of your extrahepatic manifestations when we determine whether your impairment(s) functionally equals the listings.

5. *Gastrointestinal hemorrhage* (105.02 and 105.05A). Gastrointestinal hemorrhaging can result in hematemesis (vomiting of blood), melena (tarry stools), or hematochezia (bloody stools). Under 105.02, the required transfusions of at least 10 cc of blood/kg of body weight must be at least 30 days apart and occur at least three times during a consecutive 6-month period. Under 105.05A, *hemodynamic instability* is diagnosed with signs such as pallor (pale skin), diaphoresis (profuse perspiration), rapid pulse, low blood pressure, postural hypotension (pronounced fall in blood pressure when arising to an upright position from lying down) or syncope (fainting). Hemorrhaging that results in hemodynamic instability is potentially life-

threatening and therefore requires hospitalization for transfusion and supportive care. Under 105.05A, we require only one hospitalization for transfusion of at least 10 cc of blood/kg of body weight.

6. *Ascites or hydrothorax* (105.05B) indicates significant loss of liver function due to chronic liver disease. We evaluate ascites or hydrothorax that is not attributable to other causes under 105.05B. The required findings must be present on at least two evaluations at least 60 days apart within a consecutive 6-month period and despite continuing treatment as prescribed.

7. *Spontaneous bacterial peritonitis* (105.05C) is an infectious complication of chronic liver disease. It is diagnosed by ascitic peritoneal fluid that is documented to contain an absolute neutrophil count of at least 250 cells/mm^3. The required finding in 105.05C is satisfied with one evaluation documenting peritoneal fluid infection. We do not evaluate other causes of peritonitis that are unrelated to chronic liver disease, such as tuberculosis, malignancy, and perforated bowel, under this listing. We evaluate these other causes of peritonitis under the appropriate body system listings.

8. *Hepatorenal syndrome* (105.05D) is defined as functional renal failure associated with chronic liver disease in the absence of underlying kidney pathology. Hepatorenal syndrome is documented by elevation of serum creatinine, marked sodium retention, and oliguria (reduced urine output). The requirements of 105.05D are satisfied with documentation of any one of the three laboratory findings on one evaluation. We do not evaluate known causes of renal dysfunction, such as glomerulonephritis, tubular necrosis, drug-induced renal disease, and renal infections, under this listing. We evaluate these other renal impairments under 106.00ff.

9. *Hepatopulmonary syndrome* (105.05E) is defined as arterial deoxygenation (hypoxemia) that is associated with chronic liver disease due to intrapulmonary arteriovenous shunting and vasodilatation, in the absence of other causes of arterial deoxygenation. Clinical manifestations usually include dyspnea, orthodeoxia (increasing hypoxemia with erect position), platypnea (improvement of dyspnea with flat position), cyanosis, and clubbing. The requirements of 105.05E are satisfied with documentation of any one of the findings on one evaluation. In 105.05E1, we require documentation of the altitude of the testing facility because altitude affects the measurement of arterial oxygenation. We will not purchase the specialized studies described in 105.05E2; however, if you have had these studies at a time relevant to your claim, we will make every reasonable effort to obtain the reports for the purpose of establishing whether your impairment meets 105.05E2.

10. *Hepatic encephalopathy* (105.05F).

a. *General*. Hepatic encephalopathy usually indicates severe loss of hepatocellular function. We define hepatic encephalopathy under 105.05F as a recurrent or chronic neuropsychiatric disorder, characterized by abnormal behavior, cognitive dysfunction, altered state of consciousness, and ultimately coma and death. The diagnosis is established by changes in mental status associated with fleeting neurological signs, including ''flapping tremor'' (asterixis), characteristic electroencephalographic (EEG) abnormalities, or abnormal laboratory values that indicate loss of synthetic liver function. We will not purchase the EEG testing described in 105.05F3b. However, if you have had this test at a time relevant to your claim, we will make every reasonable effort to obtain the report for the purpose of establishing whether your impairment meets 105.05F.

b. *Acute encephalopathy*. We will not evaluate your acute encephalopathy under 105.05F if it results from conditions other than chronic liver disease, such as vascular events and neoplastic diseases. We will evaluate these other causes of acute encephalopathy under the appropriate body system listings.

11. *End stage liver disease (ESLD) documented by scores from the SSA Chronic Liver Disease (SSA CLD) calculation (105.05G1) and SSA Chronic Liver Disease-Pediatric (SSA CLD–P) calculation (105.05G2)*.

a. *SSA CLD score*.

(i) If you are age 12 or older, we will use the SSA CLD score to evaluate your ESLD under 105.05G1. We explain how we calculate the SSA CLD score in a(ii) through a(vii) of this section.

(ii) To calculate the SSA CLD score, we use a formula that includes three laboratory values: Serum total bilirubin (mg/dL), serum creatinine (mg/dL), and International Normalized Ratio (INR). The formula for the SSA CLD score calculation is:

$$9.57 \times [\text{Log}_e \text{ (serum creatinine mg/dL)}]$$
$$+3.78 \times [\text{Log}_e \text{ (serum total bilirubin mg/dL)}]$$
$$+11.2 \times [\text{Log}_e \text{ (INR)}]$$
$$+6.43$$

(iii) When we indicate ''Log_e'' in the formula for the SSA CLD score calculation, we mean the ''base *e* logarithm'' or ''natural logarithm'' (ln) of a numerical laboratory value, not the ''base 10 logarithm'' or ''common logarithm'' (log) of the laboratory value, and not the actual laboratory value. For an example of SSA CLD calculation, see 5.00D11c.

(iv) For any SSA CLD score calculation, all of the required laboratory values must have been obtained within 30 days of each other. If there are multiple laboratory values within the 30-day interval for any given laboratory test (serum total bilirubin, serum creatinine, or INR), we will use the highest value for the SSA CLD score calculation. We

will round all laboratory values less than 1.0 up to 1.0.

(v) Listing 105.05G requires two SSA CLD scores. The laboratory values for the second SSA CLD score calculation must have been obtained at least 60 days after the latest laboratory value for the first SSA CLD score and within the required 6-month period. We will consider the date of each SSA CLD score to be the date of the first laboratory value used for its calculation.

(vi) If you are in renal failure or on dialysis within a week of any serum creatinine test in the period used for the SSA CLD calculation, we will use a serum creatinine of 4, which is the maximum serum creatinine level allowed in the calculation, to calculate your SSA CLD score.

(vii) If you have the two SSA CLD scores required by 105.05G1, we will find that your impairment meets the criteria of the listing from at least the date of the first SSA CLD score.

b. *SSA CLD–P score.*

(i) If you have not attained age 12, we will use the SSA CLD–P score to evaluate your ESLD under 105.05G2. We explain how we calculate the SSA CLD–P score in b(ii) through b(vii) of this section.

(ii) To calculate the SSA CLD–P score, we use a formula that includes four parameters: Serum total bilirubin (mg/dL), International Normalized Ratio (INR), serum albumin (g/dL), and whether growth failure is occurring. The formula for the SSA CLD–P score calculation is:

$4.80 \times [\text{Log}_e \text{ (serum total bilirubin mg/dL)}]$
$+18.57 \times [\text{Log}_e \text{ (INR)}]$
$-6.87 \times [\text{Log}_e \text{ (serum albumin g/dL)}]$
$+6.67$ if the child has growth failure (<-2 standard deviations for weight or height)

(iii) When we indicate ''Log_e'' in the formula for the SSA CLD–P score calculation, we mean the ''base *e* logarithm'' or ''natural logarithm'' (ln) of a numerical laboratory value, not the ''base 10 logarithm'' or ''common logarithm'' (log) of the laboratory value, and not the actual laboratory value. For example, if a female child is 4.0 years old, has a current weight of 13.5 kg (10th percentile for age) and height of 92 cm (less than the third percentile for age), and has laboratory values of serum total bilirubin 2.2 mg/dL, INR 1.0, and serum albumin 3.5 g/dL, we will compute the SSA CLD–P score as follows:

$4.80 \times [\text{Log}_e + (\text{serum total bilirubin 2.2 mg/dL}) = 0.788]$
$+18.57 \times [\text{Log}_e \text{ (INR 1.0)} = 0]$
$-6.87 \times [\text{Log}_e + (\text{serum albumin 3.5 g/dL}) = 1.253]$
$+6.67$

$= 3.78 + 0 - 8.61 + 6.67$
$= 1.84$, which is then rounded to an SSA CLD–P score of 2

(iv) For any SSA CLD–P score calculation, all of the required laboratory values (serum total bilirubin, INR, or serum albumin) must have been obtained within 30 days of each other. We will not purchase INR values for children who have not attained age 12. If there is no INR value for a child under 12 within the applicable time period, we will use an INR value of 1.1 to calculate the SSA CLD–P score. If there are multiple laboratory values within the 30-day interval for any given laboratory test, we will use the highest serum total bilirubin and INR values and the lowest serum albumin value for the SSA CLD–P score calculation. We will round all laboratory values less than 1.0 up to 1.0.

(v) The weight and length/height measurements used for the calculation must be obtained from one evaluation within the same 30-day period as in D11b(iv).

(vi) Listing 105.05G2 requires two SSA CLD–P scores. The laboratory values for the second SSA CLD–P score calculation must have been obtained at least 60 days after the latest laboratory value for the first SSA CLD–P score and within the required 6-month period. We will consider the date of each SSA CLD–P score to be the date of the first laboratory value used for its calculation.

(vii) If you have the two SSA CLD–P scores required by listing 105.05G2, we will find that your impairment meets the criteria of the listing from at least the date of the first SSA CLD–P score.

12. *Extrahepatic biliary atresia (EBA)* (105.05H) usually presents in the first 2 months of life with persistent jaundice. The impairment meets 105.05H if the diagnosis of EBA is confirmed by liver biopsy or intraoperative cholangiogram that shows obliteration of the extrahepatic biliary tree. EBA is usually surgically treated by portoenterostomy (for example, Kasai procedure). If this surgery is not performed in the first months of life or is not completely successful, liver transplantation is indicated. If you have had a liver transplant, we will evaluate your impairment under 105.09.

13. *Liver transplantation* (105.09) may be performed for metabolic liver disease, progressive liver failure, life-threatening complications of liver disease, hepatic malignancy, and acute fulminant hepatitis (viral, drug-induced, or toxin-induced). We will consider you to be disabled for 1 year from the date of the transplantation. Thereafter, we will evaluate your residual impairment(s) by considering the adequacy of post-transplant liver function, the requirement for post-transplant antiviral therapy, the frequency and severity of rejection episodes, comorbid complications, and all adverse treatment effects.

E. *How do we evaluate inflammatory bowel disease (IBD)?*

1. *Inflammatory bowel disease* (105.06) includes, but is not limited to, Crohn's disease and ulcerative colitis. These disorders, while distinct entities, share many clinical, laboratory, and imaging findings, as well as similar treatment regimens. Remissions and exacerbations of variable duration are the hallmark of IBD. Crohn's disease may involve the entire alimentary tract from the mouth to the anus in a segmental, asymmetric fashion. Obstruction, stenosis, fistulization, perineal involvement, and extraintestinal manifestations are common. Crohn's disease is rarely curable and recurrence may be a lifelong problem, even after surgical resection. In contrast, ulcerative colitis only affects the colon. The inflammatory process may be limited to the rectum, extend proximally to include any contiguous segment, or involve the entire colon. Ulcerative colitis may be cured by total colectomy.

2. Symptoms and signs of IBD include diarrhea, fecal incontinence, rectal bleeding, abdominal pain, fatigue, fever, nausea, vomiting, arthralgia, abdominal tenderness, palpable abdominal mass (usually inflamed loops of bowel) and perineal disease. You may also have signs or laboratory findings indicating malnutrition, such as weight loss, edema, anemia, hypoalbuminemia, hypokalemia, hypocalcemia, or hypomagnesemia.

3. IBD may be associated with significant extraintestinal manifestations in a variety of body systems. These include, but are not limited to, involvement of the eye (for example, uveitis, episcleritis, iritis); hepatobiliary disease (for example, gallstones, primary sclerosing cholangitis); urologic disease (for example, kidney stones, obstructive hydronephrosis); skin involvement (for example, erythema nodosum, pyoderma gangrenosum); or non-destructive inflammatory arthritis. You may also have associated thromboembolic disorders or vascular disease. These manifestations may not correlate with the severity of your IBD. If your impairment does not meet any of the criteria of 105.06, we will consider the effects of your extraintestinal manifestations in determining whether you have an impairment(s) that meets or medically equals another listing, and we will also consider the effects of your extraintestinal manifestations when we determine whether your impairment(s) functionally equals the listings.

4. Surgical diversion of the intestinal tract, including ileostomy and colostomy, does not very seriously interfere with age-appropriate functioning if you are able to maintain adequate nutrition and function of the stoma. However, if you are not able to maintain adequate nutrition, we will evaluate your impairment under 105.08.

F. *How do we evaluate short bowel syndrome (SBS)?*

1. *Short bowel syndrome* (105.07) is a disorder that occurs when congenital intestinal abnormalities, ischemic vascular insults (for example, necrotizing enterocolitis, volvulus), trauma, or IBD complications require surgical resection of more than one-half of the small intestine, resulting in the loss of intestinal absorptive surface and a state of chronic malnutrition. The management of SBS requires long-term parenteral nutrition via an indwelling central venous catheter (central line); the process is often referred to as *hyperalimentation* or *total parenteral nutrition* (TPN). Children with SBS can also feed orally, with variable amounts of nutrients being absorbed through their remaining intestine. Over time, some of these children can develop additional intestinal absorptive surface, and may ultimately be able to be weaned off their parenteral nutrition.

2. Your impairment will continue to meet 105.07 as long as you remain dependent on daily parenteral nutrition via a central venous catheter for most of your nutritional requirements. Long-term complications of SBS and parenteral nutrition include abnormal growth rates, central line infections (with or without septicemia), thrombosis, hepatotoxicity, gallstones, and loss of venous access sites. Intestinal transplantation is the only definitive treatment for children with SBS who remain chronically dependent on parenteral nutrition.

3. To document SBS, we need a copy of the operative report of intestinal resection, the summary of the hospitalization(s) including: Details of the surgical findings, medically appropriate postoperative imaging studies that reflect the amount of your residual small intestine, or if we cannot get one of these reports, other medical reports that include details of the surgical findings. We also need medical documentation that you are dependent on daily parenteral nutrition to provide most of your nutritional requirements.

G. *How do we evaluate malnutrition in children?*

1. Many types of digestive disorders can result in malnutrition and growth retardation. To meet the malnutrition criteria in 105.08A, we need documentation of a digestive disorder with associated chronic nutritional deficiency despite prescribed treatment.

2. We evaluate the growth retardation criteria in 105.08B by using the most recent growth charts by the Centers for Disease Control and Prevention (CDC).

a. If you have not attained age 2, we use weight-for-length measurements to assess whether your impairment meets the requirement of 105.08B1. CDC weight-for-length charts are age- and gender-specific.

b. If you are a child age 2 or older, we use BMI-for-age measurements to assess whether your impairment meets the requirement of 105.08B2. BMI is the ratio of your weight to

the square of your height. BMI-for-age is plotted on the CDC's gender-specific growth charts.

c. We calculate BMI using inches and pounds, meters and kilograms, or centimeters and kilograms. We must have measurements of your weight and height without shoes for these calculations.

d. We calculate BMI using one of the following formulas:

English Formula

$$\text{BMI} = \left(\frac{\text{Weight in Pounds}}{(\text{Height in Inches}) \times (\text{Height in Inches})} \right) \times 703$$

Metric Formula

$$\text{BMI} = \frac{\text{Weight in Kilograms}}{(\text{Height in Meters}) \times (\text{Height in Meters})}$$

Or

$$\text{BMI} = \left(\frac{\text{Weight in Kilograms}}{(\text{Height in Centimeters}) \times (\text{Height in Centimeters})} \right) \times 10{,}000$$

H. *How do we evaluate the need for supplemental daily enteral feeding via a gastrostomy?*

1. *General.* Infants and young children may have anatomical, neurological, or developmental disorders that interfere with their ability to feed by mouth, resulting in inadequate caloric intake to meet their growth needs. These disorders frequently result in the medical necessity to supplement caloric intake and to bypass the anatomical feeding route of mouth-throat-esophagus into the stomach.

2. Children who have not attained age 3 and who require supplemental daily enteral nutrition via a feeding gastrostomy meet 105.10 regardless of the medical reason for the gastrostomy. Thereafter, we evaluate growth impairment under 100.02, malnutrition under 105.08, or other medical or developmental disorder(s) (including the disorder(s) that necessitated gastrostomy placement) under the appropriate listing(s).

I. *How do we evaluate esophageal stricture or stenosis?* Esophageal stricture or stenosis (narrowing) from congenital atresia (absence or abnormal closure of a tubular body organ) or destructive esophagitis may result in malnutrition or the need for gastrostomy placement, which we evaluate under 105.08 or 105.10. Esophageal stricture or stenosis may also result in complications such as pneumonias due to frequent aspiration, or difficulty in maintaining nutritional status short of listing-level severity. While none of these complications may be of such severity that they would meet the criteria of another listing, the combination of impairments may medically equal the severity of a listing or functionally equal the listings.

J. *What do we mean by the phrase ''consider under a disability for 1 year''?* We use the phrase ''consider under a disability for 1 year'' following a specific event in 105.02, 105.05A, and 105.09 to explain how long your impairment can meet the requirements of those particular listings. This phrase does not refer to the date on which your disability began, only to the date on which we must reevaluate whether your impairment continues to meet a listing or is otherwise disabling. For example, if you have received a liver transplant, you may have become disabled before the transplant because of chronic liver disease. Therefore, we do not restrict our determination of the onset of disability to the date of the specified event. We will establish an onset date earlier than the date of the specified event if the evidence in your case record supports such a finding.

K. *How do we evaluate impairments that do not meet one of the digestive disorder listings?*

1. These listings are only examples of common digestive disorders that we consider severe enough to result in marked and severe functional limitations. If your impairment(s) does not meet the criteria of any of these

listings, we must also consider whether you have an impairment(s) that satisfies the criteria of a listing in another body system. For example:

a. If you have hepatitis B or C and you are depressed, we will evaluate your impairment under 112.04.

b. If you have multiple congenital abnormalities, we will evaluate your impairment(s) under the criteria in the listings for impairments that affect multiple body systems (110.00) or the criteria of listings in other affected body systems.

c. If you have digestive disorders that interfere with intake, digestion, or absorption of nutrition, and result in a reduction in your rate of growth, and your impairment does not satisfy the criteria in the malnutrition listing (105.08), we will evaluate your impairment under the growth impairment listings (100.00).

2. If you have a severe medically determinable impairment(s) that does not meet a listing, we will determine whether your impairment(s) medically equals a listing. (See § 416.926.) If your impairment(s) does not meet or medically equal a listing, you may or may not have an impairment(s) that functionally equals the listings. (See § 416.926a.) When we decide whether you continue to be disabled, we use the rules in § 416.994a.

105.01 *Category of Impairments, Digestive System*

105.02 *Gastrointestinal hemorrhaging from any cause, requiring blood transfusion* (with or without hospitalization) of at least 10 cc of blood/kg of body weight, and occurring at least three times during a consecutive 6-month period. The transfusions must be at least 30 days apart within the 6-month period. Consider under a disability for 1 year following the last documented transfusion; thereafter, evaluate the residual impairment(s).

105.03–105.04 [Reserved]

105.05 *Chronic liver disease,* with:

A. Hemorrhaging from esophageal, gastric, or ectopic varices or from portal hypertensive gastropathy, demonstrated by endoscopy, x-ray, or other appropriate medically acceptable imaging, resulting in hemodynamic instability as defined in 105.00D5, and requiring hospitalization for transfusion of at least 10 cc of blood/kg of body weight. Consider under a disability for 1 year following the last documented transfusion; thereafter, evaluate the residual impairment(s).

OR

B. Ascites or hydrothorax not attributable to other causes, despite continuing treatment as prescribed, present on at least two evaluations at least 60 days apart within a consecutive 6-month period. Each evaluation must be documented by:

1. Paracentesis or thoracentesis; or

2. Appropriate medically acceptable imaging or physical examination and one of the following:

a. Serum albumin of 3.0 g/dL or less; or

b. International Normalized Ratio (INR) of at least 1.5.

OR

C. Spontaneous bacterial peritonitis with peritoneal fluid containing an absolute neutrophil count of at least 250 cells/mm^3.

OR

D. Hepatorenal syndrome as described in 105.00D8, with one of the following:

1. Serum creatinine elevation of at least 2 mg/dL; or

2. Oliguria with 24-hour urine output less than 1 mL/kg/hr; or

3. Sodium retention with urine sodium less than 10 mEq per liter.

OR

E. Hepatopulmonary syndrome as described in 105.00D9, with:

1. Arterial oxygenation (P_aO_2,) on room air of:

a. 60 mm Hg or less, at test sites less than 3000 feet above sea level, or

b. 55 mm Hg or less, at test sites from 3000 to 6000 feet, or

c. 50 mm Hg or less, at test sites above 6000 feet; or

2. Documentation of intrapulmonary arteriovenous shunting by contrast-enhanced echocardiography or macroaggregated albumin lung perfusion scan.

OR

F. Hepatic encephalopathy as described in 105.00D10, with 1 and either 2 or 3:

1. Documentation of abnormal behavior, cognitive dysfunction, changes in mental status, or altered state of consciousness (for example, confusion, delirium, stupor, or coma), present on at least two evaluations at least 60 days apart within a consecutive 6-month period; and

2. History of transjugular intrahepatic portosystemic shunt (TIPS) or any surgical portosystemic shunt; or

3. One of the following occurring on at least two evaluations at least 60 days apart within the same consecutive 6-month period as in F1:

a. Asterixis or other fluctuating physical neurological abnormalities; or

b. Electroencephalogram (EEG) demonstrating triphasic slow wave activity; or

c. Serum albumin of 3.0 g/dL or less; or

d. International Normalized Ratio (INR) of 1.5 or greater.

OR

G. End Stage Liver Disease, with:

1. For children 12 years of age or older, SSA CLD scores of 22 or greater calculated as described in 105.00D11a. Consider under a

disability from at least the date of the first score.

2. For children who have not attained age 12, SSA CLD–P scores of 11 or greater calculated as described in 105.00D11b. Consider under a disability from at least the date of the first score.

OR

H. Extrahepatic biliary atresia as diagnosed on liver biopsy or intraoperative cholangiogram. Consider under a disability for 1 year following the diagnosis; thereafter, evaluate the residual liver function.

105.06 *Inflammatory bowel disease (IBD)* documented by endoscopy, biopsy, appropriate medically acceptable imaging, or operative findings with:

A. Obstruction of stenotic areas (not adhesions) in the small intestine or colon with proximal dilatation, confirmed by appropriate medically acceptable imaging or in surgery, requiring hospitalization for intestinal decompression or for surgery, and occurring on at least two occasions at least 60 days apart within a consecutive 6-month period;

OR

B. Two of the following despite continuing treatment as prescribed and occurring within the same consecutive 6-month period:

1. Anemia with hemoglobin less than 10.0 g/dL, present on at least two evaluations at least 60 days apart; or

2. Serum albumin of 3.0 g/dL or less, present on at least two evaluations at least 60 days apart; or

3. Clinically documented tender abdominal mass palpable on physical examination with abdominal pain or cramping that is not completely controlled by prescribed narcotic medication, present on at least two evaluations at least 60 days apart; or

4. Perineal disease with a draining abscess or fistula, with pain that is not completely controlled by prescribed narcotic medication, present on at least two evaluations at least 60 days apart; or

5. Need for supplemental daily enteral nutrition via a gastrostomy or daily parenteral nutrition via a central venous catheter. (See 105.10 for children who have not attained age 3.)

105.07 *Short bowel syndrome (SBS),* due to surgical resection of more than one-half of the small intestine, with dependence on daily parenteral nutrition via a central venous catheter (see 105.00F).

105.08 *Malnutrition* due to any digestive disorder with:

A. Chronic nutritional deficiency despite continuing treatment as prescribed, present on at least two evaluations at least 60 days apart within a consecutive 6-month period, and documented by one of the following:

1. Anemia with hemoglobin less than 10.0 g/dL; or

2. Serum albumin of 3.0 g/dL or less; or

3. Fat-soluble vitamin, mineral, or trace mineral deficiency;

AND

B. Growth retardation documented by one of the following:

1. For children who have not attained age 2, multiple weight-for-length measurements that are less than the third percentile on the CDC's most recent weight-for-length growth charts, documented at least three times within a consecutive 6-month period; or

2. For children age 2 and older, multiple Body Mass Index (BMI)-for-age measurements that are less than the third percentile on the CDC's most recent BMI-for-age growth charts, documented at least three times within a consecutive 6-month period.

105.09 *Liver transplantation.* Consider under a disability for 1 year following the date of transplantation; thereafter, evaluate the residual impairment(s) (see 105.00D13 and 105.00J).

105.10 *Need for supplemental daily enteral feeding via a gastrostomy* due to any cause, for children who have not attained age 3; thereafter, evaluate the residual impairment(s) (see 105.00H).

106.00 Genitourinary Disorders

A. Which disorders do we evaluate under these listings?

We evaluate genitourinary disorders resulting in chronic kidney disease (CKD). Examples of such disorders include chronic glomerulonephritis, hypertensive nephropathy, diabetic nephropathy, chronic obstructive uropathy, and hereditary nephropathies. We also evaluate nephrotic syndrome due to glomerular dysfunction, and congenital genitourinary disorders, such as ectopic ureter, exstrophic urinary bladder, urethral valves, and Eagle-Barrett syndrome (prune belly syndrome), under these listings.

B. What evidence do we need?

1. We need evidence that documents the signs, symptoms, and laboratory findings of your CKD. This evidence should include reports of clinical examinations, treatment records, and documentation of your response to treatment. Laboratory findings, such as serum creatinine or serum albumin levels, may document your kidney function. We generally need evidence covering a period of at least 90 days unless we can make a fully favorable determination or decision without it.

2. *Estimated glomerular filtration rate (eGFR).* The eGFR is an estimate of the filtering capacity of the kidneys that takes into account serum creatinine concentration and other variables, such as your age, gender,

and body size. If your medical evidence includes eGFR findings, we will consider them when we evaluate your CKD under 106.05.

3. *Kidney or bone biopsy*. If you have had a kidney or bone biopsy, we need a copy of the pathology report. When we cannot get a copy of the pathology report, we will accept a statement from an acceptable medical source verifying that a biopsy was performed and describing the results.

C. What other factors do we consider when we evaluate your genitourinary disorder?

1. *Chronic hemodialysis or peritoneal dialysis*.

a. Dialysis is a treatment for CKD that uses artificial means to remove toxic metabolic byproducts from the blood. Hemodialysis uses an artificial kidney machine to clean waste products from the blood; peritoneal dialysis uses a dialyzing solution that is introduced into and removed from the abdomen (peritoneal cavity) either continuously or intermittently. Under 106.03, your ongoing dialysis must have lasted or be expected to last for a continuous period of at least 12 months. To satisfy the requirement in 106.03, we will accept a report from an acceptable medical source that describes your CKD and your current dialysis, and indicates that your dialysis will be ongoing.

b. If you are undergoing chronic hemodialysis or peritoneal dialysis, your CKD may meet our definition of disability before you started dialysis. We will determine the onset of your disability based on the facts in your case record.

2. *Kidney transplant*.

a. If you receive a kidney transplant, we will consider you to be disabled under 106.04 for 1 year from the date of transplant. After that, we will evaluate your residual impairment(s) by considering your post-transplant function, any rejection episodes you have had, complications in other body systems, and any adverse effects related to ongoing treatment.

b. If you received a kidney transplant, your CKD may meet our definition of disability before you received the transplant. We will determine the onset of your disability based on the facts in your case record.

3. *Anasarca* (generalized massive edema or swelling). Under 106.06B, we need a description of the extent of edema, including pretibial (in front of the tibia), periorbital (around the eyes), or presacral (in front of the sacrum) edema. We also need a description of any ascites, pleural effusion, or pericardial effusion.

4. *Congenital genitourinary disorder*. Procedures such as diagnostic cystoscopy or circumcision do not satisfy the requirement for urologic surgical procedures in 106.07.

5. *Complications of CKD*. The hospitalizations in 106.09 may be for different complications of CKD. Examples of complications from CKD that may result in hospitalization include stroke, congestive heart failure, hypertensive crisis, or acute kidney failure requiring a short course of hemodialysis. If the CKD complication occurs during a hospitalization that was initially for a co-occurring condition, we will evaluate it under our rules for determining medical equivalence. (See §416.926 of this chapter.) We will evaluate co-occurring conditions, including those that result in hospitalizations, under the listings for the affected body system or under our rules for medical equivalence.

D. How do we evaluate disorders that do not meet one of the genitourinary listings?

1. The listed disorders are only examples of common genitourinary disorders that we consider severe enough to result in marked and severe functional limitations. If your impairment(s) does not meet the criteria of any of these listings, we must also consider whether you have an impairment(s) that satisfies the criteria of a listing in another body system.

2. If you have a severe medically determinable impairment(s) that does not meet a listing, we will determine whether your impairment(s) medically equals a listing. (See §416.926 of this chapter.) Genitourinary disorders may be associated with disorders in other body systems, and we consider the combined effects of multiple impairments when we determine whether they medically equal a listing. If your impairment(s) does not medically equal a listing, we will also consider whether it functionally equals the listings. (See §416.926a of this chapter.) We use the rules in §416.994a of this chapter when we decide whether you continue to be disabled.

106.01 Category of Impairments, Genitourinary Disorders

106.03 *Chronic kidney disease*, with chronic hemodialysis or peritoneal dialysis (see 106.00C1).

106.04 *Chronic kidney disease*, with kidney transplant. Consider under a disability for 1 year following the transplant; thereafter, evaluate the residual impairment (see 106.00C2).

106.05 *Chronic kidney disease*, with impairment of kidney function, with one of the following documented on at least two occasions at least 90 days apart during a consecutive 12-month period:

A. Serum creatinine of 3 mg/dL or greater;

OR

B. Creatinine clearance of 30 ml/min/1.73m^2 or less;

OR

C. Estimated glomerular filtration rate (eGFR) of 30 ml/min/1.73m^2 or less.

106.06 *Nephrotic syndrome*, with A and B:

A. Laboratory findings as described in 1 or 2, documented on at least two occasions at least 90 days apart during a consecutive 12-month period:

1. Serum albumin of 3.0 g/dL or less, or

2. Proteinuria of 40 mg/m^2/hr or greater;

AND

B. Anasarca (see 106.00C3) persisting for at least 90 days despite prescribed treatment.

106.07 *Congenital genitourinary disorder* (see 106.00C4) requiring urologic surgical procedures at least three times in a consecutive 12-month period, with at least 30 days between procedures. Consider under a disability for 1 year following the date of the last surgery; thereafter, evaluate the residual impairment.

106.09 *Complications of chronic kidney disease* (see 106.00C5) requiring at least three hospitalizations within a consecutive 12-month period and occurring at least 30 days apart. Each hospitalization must last at least 48 hours, including hours in a hospital emergency department immediately before the hospitalization.

107.00 Hematological Disorders

A. *Sickle cell disease*. Refers to a chronic hemolytic anemia associated with sickle cell hemoglobin, either homozygous or in combination with thalassemia or with another abnormal hemoglobin (such as C or F).

Appropriate hematologic evidence for sickle cell disease, such as hemoglobin electrophoresis must be included. Vaso-occlusive, hemolytic, or aplastic episodes should be documented by description of severity, frequency, and duration.

Disability due to sickle cell disease may be solely the result of a severe, persistent anemia or may be due to the combination of chronic progressive or episodic manifestations in the presence of a less severe anemia.

Major visceral episodes causing disability include meningitis, osteomyelitis, pulmonary infections or infarctions, cerebrovascular accidents, congestive heart failure, genitourinary involvement, etc.

B. *Coagulation defects*. Chronic inherited coagulation disorders must be documented by appropriate laboratory evidence such as abnormal thromboplastin generation, coagulation time, or factor assay.

107.01 Category of Impairments, Hemic and Lymphatic.

107.03 *Hemolytic anemia (due to any cause)*. Manifested by persistence of hematocrit of 26 percent or less despite prescribed therapy, and reticulocyte count of 4 percent or greater.

107.05 *Sickle cell disease*. With:

A. Recent, recurrent, severe vaso-occlusive crises (musculoskeletal, vertebral, abdominal); or

B. A major visceral complication in the 12 months prior to application; or

C. A hyperhemolytic or aplastic crisis within 12 months prior to application; or

D. Chronic, severe anemia with persistence of hematocrit of 26 percent or less; or

E. Congestive heart failure, cerebrovascular damage, or emotional disorder as described under the criteria in 104.02, 111.00ff, or 112.00ff.

107.06 *Chronic idiopathic thrombocytopenic purpura of childhood* with purpura and thrombocytopenia of 40,000 platelets/cu. mm. or less despite prescribed therapy or recurrent upon withdrawal of treatment.

107.08 *Inherited coagulation disorder*. With:

A. Repeated spontaneous or inappropriate bleeding; or

B. Hemarthrosis with joint deformity.

108.00 Skin Disorders

A. *What skin disorders do we evaluate with these listings?* We use these listings to evaluate skin disorders that may result from hereditary, congenital, or acquired pathological processes. The kinds of impairments covered by these listings are: Ichthyosis, bullous diseases, chronic infections of the skin or mucous membranes, dermatitis, hidradenitis suppurativa, genetic photosensitivity disorders, and burns.

B. *What documentation do we need?* When we evaluate the existence and severity of your skin disorder, we generally need information about the onset, duration, frequency of flareups, and prognosis of your skin disorder; the location, size, and appearance of lesions; and, when applicable, history of exposure to toxins, allergens, or irritants, familial incidence, seasonal variation, stress factors, and your ability to function outside of a highly protective environment. To confirm the diagnosis, we may need laboratory findings (for example, results of a biopsy obtained independently of Social Security disability evaluation or blood tests) or evidence from other medically acceptable methods consistent with the prevailing state of medical knowledge and clinical practice.

C. *How do we assess the severity of your skin disorders(s)?* We generally base our assessment of severity on the extent of your skin lesions, the frequency of flareups of your skin lesions, how your symptoms (including pain) limit you, the extent of your treatment, and how your treatment affects you.

1. *Extensive skin lesions*. Extensive skin lesions are those that involve multiple body sites or critical body areas, and result in a very serious limitation. Examples of extensive skin lesions that result in a very serious limitation include but are not limited to:

a. Skin lesions that interfere with the motion of your joints and that very seriously limit your use of more than one extremity;

that is, two upper extremities, two lower extremities, or one upper and one lower extremity.

b. Skin lesions on the palms of both hands that very seriously limit your ability to do fine and gross motor movements.

c. Skin lesions on the soles of both feet, the perineum, or both inguinal areas that very seriously limit your ability to ambulate.

2. *Frequency of flareups.* If you have skin lesions, but they do not meet the requirements of any of the listings in this body system, you may still have an impairment that results in marked and severe functional limitations when we consider your condition over time, especially if your flareups result in extensive skin lesions, as defined in C1 of this section. Therefore, if you have frequent flareups, we may find that your impairment(s) is medically equal to one of these listings even though you have some periods during which your condition is in remission. We will consider how frequent and serious your flareups are, how quickly they resolve, and how you function between flareups to determine whether you have marked and severe functional limitations that have lasted for a continuous period of at least 12 months or that can be expected to last for a continuous period of at least 12 months. We will also consider the frequency of your flareups when we determine whether you have a severe impairment and when we need to assess functional equivalence.

3. *Symptoms (including pain).* Symptoms (including pain) may be important factors contributing to the severity of your skin disorder(s). We assess the impact of symptoms as explained in §§404.1528, 404.1529, 416.928, and 416.929 of this chapter.

4. *Treatment.* We assess the effects of medication, therapy, surgery, and any other form of treatment you receive when we determine the severity and duration of your impairment(s). Skin disorders frequently respond to treatment; however, response to treatment can vary widely, with some impairments becoming resistant to treatment. Some treatments can have side effects that can in themselves result in limitations.

a. We assess the effects of continuing treatment as prescribed by determining if there is improvement in the symptoms, signs, and laboratory findings of your disorder, and if you experience side effects that result in functional limitations. To assess the effects of your treatment, we may need information about:

i. The treatment you have been prescribed (for example, the type, dosage, method and frequency of administration of medication or therapy);

ii. Your response to the treatment;

iii. Any adverse effects of the treatment; and

iv. The expected duration of the treatment.

b. Because treatment itself or the effects of treatment may be temporary, in most cases sufficient time must elapse to allow us to evaluate the impact and expected duration of treatment and its side effects. Except under 108.07 and 108.08, you must follow continuing treatment as prescribed for at least 3 months before your impairment can be determined to meet the requirements of a skin disorder listing. (See 108.00H if you are not undergoing treatment or did not have treatment for 3 months.) We consider your specific response to treatment when we evaluate the overall severity of your impairment.

D. *How do we assess impairments that may affect the skin and other body systems?* When your impairment affects your skin and has effects in other body systems, we first evaluate the predominant feature of your impairment under the appropriate body system. Examples include, but are not limited to the following.

1. *Tuberous sclerosis* primarily affects the brain. The predominant features are seizures, which we evaluate under the neurological listings in 111.00, and developmental delays or other mental disorders, which we evaluate under the mental disorders listings in 112.00.

2. *Malignant tumors of the skin* (for example, malignant melanoma) are cancers, or neoplastic diseases, which we evaluate under the listings in 113.00.

3. *Autoimmune disorders and other immune system disorders* (for example, systemic lupus erythematosus (SLE), scleroderma, human immunodeficiency virus (HIV) infection, and Sjögren's syndrome) often involve more than one body system. We first evaluate these disorders under the immune system disorders listings in 114.00. We evaluate SLE under 114.02, scleroderma under 114.04, HIV infection under 114.08, and Sjögren's syndrome under 114.10.

4. *Disfigurement or deformity* resulting from skin lesions may result in loss of sight, hearing, speech, and the ability to chew (mastication). We evaluate these impairments and their effects under the special senses and speech listings in 102.00 and the digestive system listings in 105.00. Facial disfigurement or other physical deformities may also have effects we evaluate under the mental disorders listings in 112.00, such as when they affect mood or social functioning.

5. We evaluate *erythropoietic porphyrias* under the hemic and lymphatic listings in 107.00.

6. We evaluate *hemangiomas associated with thrombocytopenia and hemorrhage* (for example, Kasabach-Merritt syndrome) involving coagulation defects, under the hemic and lymphatic listings in 107.00. But, when hemangiomas impinge on vital structures or interfere with function, we evaluate their primary effects under the appropriate body system.

E. *How do we evaluate genetic photosensitivity disorders?*

1. *Xeroderma pigmentosum (XP).* When you have XP, your impairment meets the requirements of 108.07A if you have clinical and laboratory findings showing that you have the disorder. (See 108.00E3.) People who have XP have a lifelong hypersensitivity to all forms of ultraviolet light and generally lead extremely restricted lives in highly protective environments in order to prevent skin cancers from developing. Some people with XP also experience problems with their eyes, neurological problems, mental disorders, and problems in other body systems.

2. *Other genetic photosensitivity disorders.* Other genetic photosensitivity disorders may vary in their effects on different people, and may not result in marked and severe functional limitations for a continuous period of at least 12 months. Therefore, if you have a genetic photosensitivity disorder other than XP (established by clinical and laboratory findings as described in 108.00E3), you must show that you have either extensive skin lesions or an inability to function outside of a highly protective environment to meet the requirements of 108.07B. You must also show that your impairment meets the duration requirement. By *inability to function outside of a highly protective environment* we mean that you must avoid exposure to ultraviolet light (including sunlight passing through windows and light from unshielded fluorescent bulbs), wear protective clothing and eyeglasses, and use opaque broad-spectrum sunscreens in order to avoid skin cancer or other serious effects. Some genetic photosensitivity disorders can have very serious effects in other body systems, especially special senses and speech (102.00), neurological (111.00), mental (112.00), and neoplastic (113.00). We will evaluate the predominant feature of your impairment under the appropriate body system, as explained in 108.00D.

3. *Clinical and laboratory findings.*

a. *General.* We need documentation from an acceptable medical source, as defined in §§404.1513(a) and 416.913(a), to establish that you have a medically determinable impairment. In general, we must have evidence of appropriate laboratory testing showing that you have XP or another genetic photosensitivity disorder. We will find that you have XP or another genetic photosensitivity disorder based on a report from an acceptable medical source indicating that you have the impairment, supported by definitive genetic laboratory studies documenting appropriate chromosomal changes, including abnormal DNA repair or another DNA or genetic abnormality specific to your type of photosensitivity disorder.

b. *What we will accept as medical evidence instead of the actual laboratory report.* When we do not have the actual laboratory report, we need evidence from an acceptable medical source that includes appropriate clinical findings for your impairment and that is persuasive that a positive diagnosis has been confirmed by appropriate laboratory testing at some time prior to our evaluation. To be persuasive, the report must state that the appropriate definitive genetic laboratory study was conducted and that the results confirmed the diagnosis. The report must be consistent with other evidence in your case record.

F. *How do we evaluate burns?* Electrical, chemical, or thermal burns frequently affect other body systems; for example, musculoskeletal, special senses and speech, respiratory, cardiovascular, renal, neurological, or mental. Consequently, we evaluate burns the way we evaluate other disorders that can affect the skin and other body systems, using the listing for the predominant feature of your impairment. For example, if your soft tissue injuries are under continuing surgical management (as defined in 101.00M), we will evaluate your impairment under 101.08. However, if your burns do not meet the requirements of 101.08 and you have extensive skin lesions that result in a very serious limitation (as defined in 108.00C1) that has lasted or can be expected to last for a continuous period of at least 12 months, we will evaluate them under 108.08.

G. *How do we determine if your skin disorder(s) will continue at a disabling level of severity in order to meet the duration requirement?* For all of these skin disorder listings except 108.07 and 108.08, we will find that your impairment meets the duration requirement if your skin disorder results in extensive skin lesions that persist for at least 3 months despite continuing treatment as prescribed. By *persist*, we mean that the longitudinal clinical record shows that, with few exceptions, your lesions have been at the level of severity specified in the listing. For 108.07A, we will presume that you meet the duration requirement. For 108.07B and 108.08, we will consider all of the relevant medical and other information in your case record to determine whether your skin disorder meets the duration requirement.

H. *How do we assess your skin disorder(s) if your impairment does not meet the requirements of one of these listings?*

1. These listings are only examples of common skin disorders that we consider severe enough to result in marked and severe functional limitations. For most of these listings, if you do not have continuing treatment as prescribed, if your treatment has not lasted for at least 3 months, or if you do not have extensive skin lesions that have persisted for at least 3 months, your impairment cannot meet the requirements of these skin disorder listings. (This provision does not apply to 108.07 and 108.08.) However, we may still find that you are disabled because your impairment(s) meets the requirements

of a listing in another body system, medically equals (see §§ 404.1526 and 416.926 of this chapter) the severity of a listing, or functionally equals the severity of the listings.

2. If you have not received ongoing treatment or do not have an ongoing relationship with the medical community despite the existence of a severe impairment(s), or if your skin lesions have not persisted for at least 3 months but you are undergoing continuing treatment as prescribed, you may still have an impairment(s) that meets a listing in another body system or that medically equals a listing. If you do not have an impairment(s) that meets or medically equals a listing, we will consider whether your impairment(s) functionally equals the listings. (See § 416.924 of this chapter.) When we decide whether you continue to be disabled, we use the rules in § 416.994a of this chapter.

108.01 Category of Impairments, Skin Disorders

108.02 *Ichthyosis*, with extensive skin lesions that persist for at least 3 months despite continuing treatment as prescribed.

108.03 *Bullous disease* (for example, pemphigus, erythema multiforme bullosum, epidermolysis bullosa, bullous pemphigoid, dermatitis herpetiformis), with extensive skin lesions that persist for at least 3 months despite continuing treatment as prescribed.

108.04 *Chronic infections of the skin or mucous membranes*, with extensive fungating or extensive ulcerating skin lesions that persist for at least 3 months despite continuing treatment as prescribed.

108.05 *Dermatitis* (for example, psoriasis, dyshidrosis, atopic dermatitis, exfoliative dermatitis, allergic contact dermatitis), with extensive skin lesions that persist for at least 3 months despite continuing treatment as prescribed.

108.06 *Hidradenitis suppurativa*, with extensive skin lesions involving both axillae, both inguinal areas, or the perineum that persist for at least 3 months despite continuing treatment as prescribed.

108.07 *Genetic photosensitivity disorders*, established as described in 108.00E.

A. Xeroderma pigmentosum. Consider the individual disabled from birth.

B. Other genetic photosensitivity disorders, with:

1. Extensive skin lesions that have lasted or can be expected to last for a continuous period of at least 12 months, or

2. Inability to function outside of a highly protective environment for a continuous period of at least 12 months (see 108.00E2).

108.08 *Burns*, with extensive skin lesions that have lasted or can be expected to last for a continuous period of at least 12 months. (See 108.00F).

109.00 ENDOCRINE DISORDERS

A. *What is an endocrine disorder?*

An endocrine disorder is a medical condition that causes a hormonal imbalance. When an endocrine gland functions abnormally, producing either too much of a specific hormone (hyperfunction) or too little (hypofunction), the hormonal imbalance can cause various complications in the body. The major glands of the endocrine system are the pituitary, thyroid, parathyroid, adrenal, and pancreas.

B. *How do we evaluate the effects of endocrine disorders?* The only listing in this body system addresses children from birth to the attainment of age 6 who have diabetes mellitus (DM) and require daily insulin. We evaluate other impairments that result from endocrine disorders under the listings for other body systems. For example:

1. *Pituitary gland disorders* can disrupt hormone production and normal functioning in other endocrine glands and in many body systems. The effects of pituitary gland disorders vary depending on which hormones are involved. For example, when pituitary growth hormone deficiency in growing children limits bone maturation and results in pathological short stature, we evaluate this linear growth impairment under 100.00. When pituitary hypofunction affects water and electrolyte balance in the kidney and leads to diabetes insipidus, we evaluate the effects of recurrent dehydration under 106.00.

2. *Thyroid gland disorders* affect the sympathetic nervous system and normal metabolism. We evaluate thyroid-related changes in linear growth under 100.00; thyroid-related changes in blood pressure and heart rate that cause cardiac arrhythmias or other cardiac dysfunction under 104.00; thyroid-related weight loss under 105.00; and cognitive limitations, mood disorders, and anxiety under 112.00.

3. *Parathyroid gland disorders* affect calcium levels in bone, blood, nerves, muscle, and other body tissues. We evaluate parathyroid-related osteoporosis and fractures under 101.00; abnormally elevated calcium levels in the blood (hypercalcemia) that lead to cataracts under 102.00; kidney failure under 106.00; and recurrent abnormally low blood calcium levels (hypocalcemia) that lead to increased excitability of nerves and muscles, such as tetany and muscle spasms, under 111.00.

4. *Adrenal gland disorders* affect bone calcium levels, blood pressure, metabolism, and mental status. We evaluate adrenal-related linear growth impairments under 100.00; adrenal-related osteoporosis with fractures that compromises the ability to walk or to use the upper extremities under 101.00; adrenal-related hypertension that worsens heart failure or causes recurrent arrhythmias

under 104.00; adrenal-related weight loss under 105.00; and mood disorders under 112.00.

5. *Diabetes mellitus and other pancreatic gland disorders* disrupt the production of several hormones, including insulin, that regulate metabolism and digestion. Insulin is essential to the absorption of glucose from the bloodstream into body cells for conversion into cellular energy. The most common pancreatic gland disorder is *diabetes mellitus* (DM). There are two major types of DM: type 1 and type 2. Both type 1 and type 2 DM are chronic disorders that can have serious, disabling complications that meet the duration requirement. Type 1 DM—previously known as ''juvenile diabetes'' or ''insulin-dependent diabetes mellitus'' (IDDM)—is an absolute deficiency of insulin secretion that commonly begins in childhood and continues throughout adulthood. Treatment of type 1 DM always requires lifelong daily insulin. With type 2 DM—previously known as ''adult-onset diabetes mellitus'' or ''non-insulin-dependent diabetes mellitus'' (NIDDM)—the body's cells resist the effects of insulin, impairing glucose absorption and metabolism. Type 2 is less common than type 1 DM in children, but physicians are increasingly diagnosing type 2 DM before age 18. Treatment of type 2 DM generally requires lifestyle changes, such as increased exercise and dietary modification, and sometimes insulin in addition to other medications. While both type 1 and type 2 DM are usually controlled, some children do not achieve good control for a variety of reasons including, but not limited to, hypoglycemia unawareness, other disorders that can affect blood glucose levels, inability to manage DM due to a mental disorder, or inadequate treatment.

a. *Hyperglycemia*. Both types of DM cause hyperglycemia, which is an abnormally high level of blood glucose that may produce acute and long-term complications. Acute complications of hyperglycemia include diabetic ketoacidosis. Long-term complications of chronic hyperglycemia include many conditions affecting various body systems but are rare in children.

b. *Diabetic ketoacidosis (DKA)*. DKA is an acute, potentially life-threatening complication of DM in which the chemical balance of the body becomes dangerously hyperglycemic and acidic. It results from a severe insulin deficiency, which can occur due to missed or inadequate daily insulin therapy or in association with an acute illness. It usually requires hospital treatment to correct the acute complications of dehydration, electrolyte imbalance, and insulin deficiency. You may have serious complications resulting from your treatment, which we evaluate under the affected body system. For example, we evaluate cardiac arrhythmias under 104.00, intestinal necrosis under 105.00, and cerebral edema and seizures under 111.00. Recurrent episodes of DKA in adolescents may result from mood or eating disorders, which we evaluate under 112.00.

c. *Hypoglycemia*. Children with DM may experience episodes of hypoglycemia, which is an abnormally low level of blood glucose. Most children age 6 and older recognize the symptoms of hypoglycemia and reverse them by consuming substances containing glucose; however, some do not take this step because of hypoglycemia unawareness. Severe hypoglycemia can lead to complications, including seizures or loss of consciousness, which we evaluate under 111.00, or altered mental status, cognitive deficits, and permanent brain damage, which we evaluate under 112.00.

C. *How do we evaluate DM in children?*

Listing 109.08 is only for children with DM who have not attained age 6 and who require daily insulin. For all other children (that is, children with DM who are age 6 or older and require daily insulin, and children of any age with DM who do not require daily insulin), we follow our rules for determining whether the DM is severe, alone or in combination with another impairment, whether it meets or medically equals the criteria of a listing in another body system, or functionally equals the listings under the criteria in §416.926a, considering the factors in §416.924a. The management of DM in children can be complex and variable from day to day, and all children with DM require some level of adult supervision. For example, if a child age 6 or older has a medical need for 24-hour-a-day adult supervision of insulin treatment, food intake, and physical activity to ensure survival, we will find that the child's impairment functionally equals the listings based on the example in §416.926a(m)(5).

D. *How do we evaluate other endocrine disorders that do not have effects that meet or medically equal the criteria of any listing in other body systems?* If your impairment(s) does not meet or medically equal a listing in another body system, we will consider whether your impairment(s) functionally equals the listings under the criteria in §416.926a, considering the factors in §416.924a. When we decide whether you continue to be disabled, we use the rules in §416.994a.

109.01 *Category of Impairments, Endocrine*

109.08 *Any type of diabetes mellitus in a child who requires daily insulin and has not attained age 6.* Consider under a disability until the attainment of age 6. Thereafter, evaluate the diabetes mellitus according to the rules in 109.00B5 and C.

110.00 Congenital Disorders That Affect Multiple Body Systems

A. *Which disorders do we evaluate under this body system?* We evaluate non-mosaic Down syndrome and catastrophic congenital disorders under this body system.

B. *What is non-mosaic Down syndrome?* Non-mosaic Down syndrome is a genetic disorder. Most children with non-mosaic Down syndrome have three copies of chromosome 21 in all of their cells (chromosome 21 trisomy); some have an extra copy of chromosome 21 attached to a different chromosome in all of their cells (chromosome 21 translocation). Virtually all children with non-mosaic Down syndrome have characteristic facial or other physical features, delayed physical development, and intellectual disability. Children with non-mosaic Down syndrome may also have congenital heart disease, impaired vision, hearing problems, and other disorders. We evaluate non-mosaic Down syndrome under 110.06. If you have non-mosaic Down syndrome documented as described in 110.00C, we consider you disabled from birth.

C. What evidence do we need to document non-mosaic Down syndrome under 110.06?

1. Under 110.06A, we will find you disabled based on laboratory findings.

a. To find that your disorder meets 110.06A, we need a copy of the laboratory report of karyotype analysis, which is the definitive test to establish non-mosaic Down syndrome. We will not purchase karyotype analysis. We will not accept a fluorescence in situ hybridization (FISH) test because it does not distinguish between the mosaic and non-mosaic forms of Down syndrome.

b. If a physician (see §§404.1513(a)(1) and 416.913(a)(1) of this chapter) has not signed the laboratory report of karyotype analysis, the evidence must also include a physician's statement that you have Down syndrome.

c. For purposes of 110.06A, we do not require evidence stating that you have the distinctive facial or other physical features of Down syndrome.

2. If we do not have a laboratory report of karyotype analysis documenting that you have non-mosaic Down syndrome, we may find you disabled under 110.06B or 110.06C.

a. Under 110.06B, we need a physician's report stating: (i) your karyotype diagnosis or evidence that documents your type of Down syndrome that is consistent with prior karyotype analysis (for example, reference to a diagnosis of ''trisomy 21'') and (ii) that you have the distinctive facial or other physical features of Down syndrome. We do not require a detailed description of the facial or other physical features of the disorder. However, we will not find that your disorder meets 110.06B if we have evidence—such as evidence of functioning inconsistent with the diagnosis—that indicates that you do not have non-mosaic Down syndrome.

b. If we do not have evidence of prior karyotype analysis (you did not have testing, or you had testing but we do not have information from a physician about the test results), we will find that your disorder meets 110.06C if we have: (i) a physician's report stating that you have the distinctive facial or other physical features of Down syndrome and (ii) evidence that your functioning is consistent with a diagnosis of non-mosaic Down syndrome. This evidence may include medical or nonmedical information about your physical and mental abilities, including information about your development, education, work history, or the results of psychological testing. However, we will not find that your disorder meets 110.06C if we have evidence—such as evidence of functioning inconsistent with the diagnosis—that indicates that you do not have non-mosaic Down syndrome.

D. *What are catastrophic congenital disorders?* Some catastrophic congenital disorders, such as anencephaly, cyclopia, chromosome 13 trisomy (Patau syndrome or trisomy D), and chromosome 18 trisomy (Edwards' syndrome or trisomy E), are usually expected to result in early death. Others such as cri du chat syndrome (chromosome 5p deletion syndrome) and the infantile onset form of Tay-Sachs disease interfere very seriously with development. We evaluate catastrophic congenital disorders under 110.08. The term ''very seriously'' in 110.08 has the same meaning as in the term ''extreme'' in §416.926a(e)(3) of this chapter.

E. *What evidence do we need under 110.08?*

We need one of the following to determine if your disorder meets 110.08A or B:

1. A laboratory report of the definitive test that documents your disorder (for example, genetic analysis or evidence of biochemical abnormalities) signed by a physician.

2. A laboratory report of the definitive test that documents your disorder that is not signed by a physician *and* a report from a physician stating that you have the disorder.

3. A report from a physician stating that you have the disorder with the typical clinical features of the disorder and that you had definitive testing that documented your disorder. In this case, we will find that your disorder meets 110.08A or B unless we have evidence that indicates that you do not have the disorder.

4. If we do not have the definitive laboratory evidence we need under E1, E2, or E3, we will find that your disorder meets 110.08A or B if we have: (i) a report from a physician stating that you have the disorder and that you have the typical clinical features of the disorder, *and* (ii) other evidence that supports the diagnosis. This evidence may include medical or nonmedical information about your development and functioning.

5. For obvious catastrophic congenital anomalies that are expected to result in early death, such as anencephaly and cyclopia, we need evidence from a physician that demonstrates that the infant has the characteristic physical features of the disorder. In these rare cases, we do not need

laboratory testing or any other evidence that confirms the disorder.

F. *How do we evaluate mosaic Down syndrome and other congenital disorders that affect multiple body systems?*

1. *Mosaic Down syndrome.* Approximately 2 percent of children with Down syndrome have the mosaic form. In mosaic Down syndrome, there are some cells with an extra copy of chromosome 21 and other cells with the normal two copies of chromosome 21. Mosaic Down syndrome can be so slight as to be undetected clinically, but it can also be profound and disabling, affecting various body systems.

2. *Other congenital disorders that affect multiple body systems.* Other congenital disorders, such as congenital anomalies, chromosomal disorders, dysmorphic syndromes, inborn metabolic syndromes, and perinatal infectious diseases, can cause deviation from, or interruption of, the normal function of the body or can interfere with development. Examples of these disorders include both the juvenile and late-onset forms of Tay-Sachs disease, trisomy X syndrome (XXX syndrome), fragile X syndrome, phenylketonuria (PKU), caudal regression syndrome, and fetal alcohol syndrome. For these disorders and other disorders like them, the degree of deviation, interruption, or interference, as well as the resulting functional limitations and their progression, may vary widely from child to child and may affect different body systems.

3. *Evaluating the effects of mosaic Down syndrome or another congenital disorder under the listings.* When the effects of mosaic Down syndrome or another congenital disorder that affects multiple body systems are sufficiently severe we evaluate the disorder under the appropriate affected body system(s), such as musculoskeletal, special senses and speech, neurological, or mental disorders. Otherwise, we evaluate the specific functional limitations that result from the disorder under our other rules described in 110.00G.

G. *What if your disorder does not meet a listing?* If you have a severe medically determinable impairment(s) that does not meet a listing, we will consider whether your impairment(s) medically equals a listing. See § 416.926 of this chapter. If your impairment(s) does not meet or medically equal a listing, we will consider whether it functionally equals the listings. See §§ 416.924a and 416.926a of this chapter. We use the rules in § 416.994a of this chapter when we decide whether you continue to be disabled.

110.01 CATEGORY OF IMPAIRMENTS, CONGENITAL DISORDERS THAT AFFECT MULTIPLE BODY SYSTEMS

110.06 *Non-mosaic Down syndrome* (chromosome 21 trisomy or chromosome 21 translocation), documented by:

A. A laboratory report of karyotype analysis signed by a physician, or both a laboratory report of karyotype analysis not signed by a physician *and* a statement by a physician that the child has Down syndrome (see 110.00C1), or

B. A physician's report stating that the child has chromosome 21 trisomy or chromosome 21 translocation consistent with karyotype analysis with the distinctive facial or other physical features of Down syndrome (see 110.00C2a), or

C. A physician's report stating that the child has Down syndrome with the distinctive facial or other physical features *and* evidence demonstrating that the child is functioning at the level of a child with non-mosaic Down syndrome (see 110.00C2b).

110.08 *A catastrophic congenital disorder* (see 110.00D and 110.00E) with:

A. Death usually expected within the first months of life, or

B. Very serious interference with development or functioning.

111.00 NEUROLOGICAL

A. *Convulsive epilepsy* must be substantiated by at least one detailed description of a typical seizure. Report of recent documentation should include a neurological examination with frequency of episodes and any associated phenomena substantiated.

Young children may have convulsions in association with febrile illnesses. Proper use of 111.02 and 111.03 requires that epilepsy be established. Although this does not exclude consideration of seizures occurring during febrile illnesses, it does require documentation of seizures during nonfebrile periods.

There is an expected delay in control of epilepsy when treatment is started, particularly when changes in the treatment regimen are necessary. Therefore, an epileptic disorder should not be considered to meet the requirements of 111.02 or 111.03 unless it is shown that convulsive episodes have persisted more than three months after prescribed therapy began.

B. *Nonconvulsive epilepsy.* Classical petit mal seizures must be documented by characteristic EEG pattern, plus information as to age at onset and frequency of clinical seizures.

C. *Motor dysfunction.* As described in 111.06, motor dysfunction may be due to any neurological disorder. It may be due to static or progressive conditions involving any area of the nervous system and producing any type of neurological impairment. This may include weakness, spasticity, lack of coordination, ataxia, tremor, athetosis, or sensory loss. Documentation of motor dysfunction must include neurologic findings and description of type of neurologic abnormality

(e.g., spasticity, weakness), as well as a description of the child's functional impairment (*i.e.*, what the child is unable to do because of the abnormality). Where a diagnosis has been made, evidence should be included for substantiation of the diagnosis (e.g., blood chemistries and muscle biopsy reports), wherever applicable.

D. *Impairment of communication*. The documentation should include a description of a recent comprehensive evaluation, including all areas of affective and effective communication, performed by a qualified professional.

E. *Brain tumors*. We evaluate malignant brain tumors under the criteria in 113.13. For benign brain tumors, we determine the severity and duration of the impairment on the basis of symptoms, signs, and laboratory findings (111.05).

111.01 Category of Impairment, Neurological

111.02 *Major motor seizure disorder*.

A. *Convulsive epilepsy*. In a child with an established diagnosis of epilepsy, the occurrence of more than one major motor seizure per month despite at least three months of prescribed treatment. With:

1. Daytime episodes (loss of consciousness and convulsive seizures); or

2. Nocturnal episodes manifesting residuals which interfere with activity during the day.

B. *Convulsive epilepsy syndrome*. In a child with an established diagnosis of epilepsy, the occurrence of at least one major motor seizure in the year prior to application despite at least three months of prescribed treatment. And one of the following:

1. IQ of 70 or less; or

2. Significant interference with communication due to speech, hearing, or visual defect; or

3. Significant mental disorder; or

4. Where significant adverse effects of medication interfere with major daily activities.

111.03 *Nonconvulsive epilepsy*. In a child with an established seizure disorder, the occurrence of more than one minor motor seizure per week, with alteration of awareness or loss of consciousness, despite at least three months of prescribed treatment.

111.05 *Benign brain tumors*. Evaluate under 111.02, 111.03, 111.06, 111.09 or the criteria of the affected body system.

111.06 *Motor dysfunction (due to any neurological disorder)*. Persistent disorganization or deficit of motor function for age involving two extremities, which (despite prescribed therapy) interferes with age-appropriate major daily activities and results in disruption of:

A. Fine and gross movements; or

B. Gait and station.

111.07 *Cerebral Palsy*. With:

A. Motor dysfunction meeting the requirements of 101.02 or 111.06; or

B. Less severe motor dysfunction (but more than slight) and one of the following:

1. IQ of 70 or less; or

2. Seizure disorder, with at least one major motor seizure in the year prior to application; or

3. Significant interference with communication due to speech, hearing or visual defect; or

4. Significant emotional disorder.

111.08 *Meningomyelocele (and related disorders)*. With one of the following despite prescribed treatment:

A. Motor dysfunction meeting the requirements of 101.02 or 111.06; or

B. Less severe motor dysfunction (but more than slight), and:

1. Urinary or fecal incontinence when inappropriate for age; or

2. IQ of 70 or less; or

C. Four extremity involvement; or

D. Noncompensated hydrocephalus producing interference with mental or motor developmental progression.

111.09 *Communication impairment, associated with documented neurological disorder*. And one of the following:

A. Documented speech deficit which significantly affects the clarity and content of the speech; or

B. Documented comprehension deficit resulting in ineffective verbal communication for age; or

C. Impairment of hearing as described under the criteria in 102.10 or 102.11.

112.00 MENTAL DISORDERS

A. *Introduction:* The structure of the mental disorders listings for children under age 18 parallels the structure for the mental disorders listings for adults but is modified to reflect the presentation of mental disorders in children. The listings for mental disorders in children are arranged in 11 diagnostic categories: Organic mental disorders (112.02); schizophrenic, delusional (paranoid), schizoaffective, and other psychotic disorders (112.03); mood disorders (112.04); intellectual disability (112.05); anxiety disorders (112.06); somatoform, eating, and tic disorders (112.07); personality disorders (112.08); psychoactive substance dependence disorders (112.09); autistic disorder and other pervasive developmental disorders (112.10); attention deficit hyperactivity disorder (112.11); and developmental and emotional disorders of newborn and younger infants (112.12).

There are significant differences between the listings for adults and the listings for children. There are disorders found in children that have no real analogy in adults; hence, the differences in the diagnostic categories for children. The presentation of mental disorders in children, particularly the very young child, may be subtle and of a character different from the signs and symptoms found in adults. For example, findings

such as separation anxiety, failure to mold or bond with the parents, or withdrawal may serve as findings comparable to findings that mark mental disorders in adults. The activities appropriate to children, such as learning, growing, playing, maturing, and school adjustment, are also different from the activities appropriate to the adult and vary widely in the different childhood stages.

Each listing begins with an introductory statement that describes the disorder or disorders addressed by the listing. This is followed (except in listings 112.05 and 112.12) by paragraph A criteria (a set of medical findings) and paragraph B criteria (a set of impairment-related functional limitations). An individual will be found to have a listed impairment when the criteria of both paragraphs A and B of the listed impairment are satisfied.

The purpose of the criteria in paragraph A is to substantiate medically the presence of a particular mental disorder. Specific symptoms and signs under any of the listings 112.02 through 112.12 cannot be considered in isolation from the description of the mental disorder contained at the beginning of each listing category. Impairments should be analyzed or reviewed under the mental category(ies) indicated by the medical findings.

Paragraph A of the listings is a composite of medical findings which are used to substantiate the existence of a disorder and may or may not be appropriate for children at specific developmental stages. However, a range of medical findings is included in the listings so that no age group is excluded. For example, in listing 112.02A7, emotional lability and crying would be inappropriate criteria to apply to older infants and toddlers, age 1 to attainment of age 3; whereas in 112.02A1, developmental arrest, delay, or regression are appropriate criteria for older infants and toddlers. Whenever the adjudicator decides that the requirements of paragraph A of a particular mental listing are satisfied, then that listing should be applied regardless of the age of the child to be evaluated.

The purpose of the paragraph B criteria is to describe impairment-related functional limitations which are applicable to children. Standardized tests of social or cognitive function and adaptive behavior are frequently available and appropriate for the evaluation of children and, thus, such tests are included in the paragraph B functional parameters. The functional restrictions in paragraph B must be the result of the mental disorder which is manifested by the medical findings in paragraph A.

We did not include separate C criteria for listings 112.02, 112.03, 112.04, and 112.06, as are found in the adult listings, because for the most part we do not believe that the residual disease processes described by these listings are commonly found in children. However, in unusual cases where these disorders are found in children and are comparable to the severity and duration found in adults, we may use the adult listings 12.02C, 12.03C, 12.04C, and 12.06C criteria to evaluate such cases.

The structure of the listings for Intellectual Disability (112.05) and Developmental and Emotional Disorders of Newborn and Younger Infants (112.12) is different from that of the other mental disorders. Listing 112.05 (Intellectual Disability) contains six sets of criteria. If an impairment satisfies the diagnostic description in the introductory paragraph and any one of the six sets of criteria, we will find that the child's impairment meets the listing. For listings 112.05D and 112.05F, we will assess the degree of functional limitation the additional impairment(s) imposes to determine if it causes more than minimal functional limitations, *i.e.*, is a ''severe'' impairment(s), as defined in § 416.924(c). If the additional impairment(s) does not cause limitations that are ''severe'' as defined in § 416.924(c), we will not find that the additional impairment(s) imposes an additional and significant limitation of function. Listing 112.12 (Developmental and Emotional Disorders of Newborn and Younger Infants) contains five criteria, any one of which, if satisfied, will result in a finding that the infant's impairment meets the listing.

It must be remembered that these listings are only examples of common mental disorders that are severe enough to find a child disabled. When a child has a medically determinable impairment that is not listed, an impairment that does not meet the requirements of a listing, or a combination of impairments no one of which meets the requirements of a listing, we will make a determination whether the child's impairment(s) medically or functionally equals the listings. (See §§ 404.1526, 416.926, and 416.926a.) This determination can be especially important in older infants and toddlers (age 1 to attainment of age 3), who may be too young for identification of a specific diagnosis, yet demonstrate serious functional limitations. Therefore, the determination of equivalency is necessary to the evaluation of any child's case when the child does not have an impairment that meets a listing.

B. *Need for Medical Evidence:* The existence of a medically determinable impairment of the required duration must be established by medical evidence consisting of symptoms, signs, and laboratory findings (including psychological or developmental test findings). Symptoms are complaints presented by the child. Psychiatric signs are medically demonstrable phenomena that indicate specific psychological abnormalities, e.g., abnormalities of behavior, mood, thought, memory, orientation, development, or perception, as described by an appropriate medical source.

Symptoms and signs generally cluster together to constitute recognizable mental disorders described in paragraph A of the listings. These findings may be intermittent or continuous depending on the nature of the disorder.

C. *Assessment of Severity:* In childhood cases, as with adults, severity is measured according to the functional limitations imposed by the medically determinable mental impairment. However, the range of functions used to assess impairment severity for children varies at different stages of maturation. The functional areas that we consider are: Motor function; cognitive/communicative function; social function; personal function; and concentration, persistence, or pace. In most functional areas, there are two alternative methods of documenting the required level of severity: (1) Use of standardized tests alone, where appropriate test instruments are available, and (2) use of other medical findings. (See 112.00D for explanation of these documentation requirements.) The use of standardized tests is the preferred method of documentation if such tests are available.

Newborn and younger infants (birth to attainment of age 1) have not developed sufficient personality differentiation to permit formulation of appropriate diagnoses. We have, therefore, assigned listing 112.12 for Developmental and Emotional Disorders of Newborn and Younger Infants for the evaluation of mental disorders of such children. Severity of these disorders is based on measures of development in motor, cognitive/communicative, and social functions. When older infants and toddlers (age 1 to attainment of age 3) do not clearly satisfy the paragraph A criteria of any listing because of insufficient developmental differentiation, they must be evaluated under the rules for equivalency. The principles for assessing the severity of impairment in such children, described in the following paragraphs, must be employed.

Generally, when we assess the degree of developmental delay imposed by a mental impairment, we will use an infant's or toddler's chronological age; *i.e.*, the child's age based on birth date. If the infant or toddler was born prematurely, however, we will follow the rules in § 416.924b(b) to determine whether we should use the infant's or toddler's corrected chronological age; *i.e.*, the chronological age adjusted by the period of gestational prematurity.

In defining the severity of functional limitations, two different sets of paragraph B criteria corresponding to two separate age groupings have been established, in addition to listing 112.12, which is for children who have not attained age 1. These age groups are: older infants and toddlers (age 1 to attainment of age 3) and children (age 3 to attainment of age 18). However, the discussion below in 112.00C1, 2, 3, and 4, on the age-appropriate areas of function, is broken down into four age groupings: older infants and toddlers (age 1 to attainment of age 3), preschool children (age 3 to attainment of age 6), primary school children (age 6 to attainment of age 12), and adolescents (age 12 to attainment of age 18). This was done to provide specific guidance on the age group variances in disease manifestations and methods of evaluation.

Where ''marked'' is used as a standard for measuring the degree of limitation it means more than moderate but less than extreme. A marked limitation may arise when several activities or functions are impaired, or even when only one is impaired, as long as the degree of limitation is such as to interfere seriously with the ability to function (based upon age-appropriate expectations) independently, appropriately, effectively, and on a sustained basis. When standardized tests are used as the measure of functional parameters, a valid score that is two standard deviations below the norm for the test will be considered a marked restriction.

1. *Older infants and toddlers (age 1 to attainment of age 3).* In this age group, impairment severity is assessed in three areas: (a) Motor development, (b) cognitive/communicative function, and (c) social function.

a. *Motor development.* Much of what we can discern about mental function in these children frequently comes from observation of the degree of development of fine and gross motor function. Developmental delay, as measured by a good developmental milestone history confirmed by medical examination, is critical. This information will ordinarily be available in the existing medical evidence from the claimant's treating sources and other medical sources, supplemented by information from nonmedical sources, such as parents, who have observed the child and can provide pertinent historical information. It may also be available from standardized testing. If the delay is such that the older infant or toddler has not achieved motor development generally acquired by children no more than one-half the child's chronological age, the criteria are satisfied.

b. *Cognitive/communicative function.* Cognitive/communicative function is measured using one of several standardized infant scales. Appropriate tests for the measure of such function are discussed in 112.00D. Screening instruments may be useful in uncovering potentially serious impairments, but often must be supplemented by other data. However, in some cases, the results of screening tests may show such obvious abnormalities that further testing will clearly be unnecessary.

For older infants and toddlers, alternative criteria covering disruption in communication as measured by their capacity to use simple verbal and nonverbal structures to communicate basic needs are provided.

c. *Social function.* Social function in older infants and toddlers is measured in terms of the development of relatedness to people (e.g., bonding and stranger anxiety) and attachment to animate or inanimate objects. Criteria are provided that use standard social maturity scales or alternative criteria that describe marked impairment in socialization.

2. *Preschool children (age 3 to attainment of age 6).* For the age groups including preschool children through adolescence, the functional areas used to measure severity are: (a) Cognitive/communicative function, (b) social function, (c) personal function, and (d) deficiencies of concentration, persistence, or pace resulting in frequent failure to complete tasks in a timely manner. After 36 months, motor function is no longer felt to be a primary determinant of mental function, although, of course, any motor abnormalities should be documented and evaluated.

a. *Cognitive/communicative function.* In the preschool years and beyond, cognitive function can be measured by standardized tests of intelligence, although the appropriate instrument may vary with age. A primary criterion for limited cognitive function is a valid verbal, performance, or full scale IQ of 70 or less. The listings also provide alternative criteria, consisting of tests of language development or bizarre speech patterns.

b. *Social function.* Social functioning refers to a child's capacity to form and maintain relationships with parents, other adults, and peers. Social functioning includes the ability to get along with others (e.g., family members, neighborhood friends, classmates, teachers). Impaired social functioning may be caused by inappropriate externalized actions (e.g., running away, physical aggression—but not self-injurious actions, which are evaluated in the personal area of functioning), or inappropriate internalized actions (e.g., social isolation, avoidance of interpersonal activities, mutism). Its severity must be documented in terms of intensity, frequency, and duration, and shown to be beyond what might be reasonably expected for age. Strength in social functioning may be documented by such things as the child's ability to respond to and initiate social interaction with others, to sustain relationships, and to participate in group activities. Cooperative behaviors, consideration for others, awareness of others' feelings, and social maturity, appropriate to a child's age, also need to be considered. Social functioning in play and school may involve interactions with adults, including responding appropriately to persons in authority (e.g., teachers, coaches) or cooperative behaviors involving other children. Social functioning is observed not only at home but also in preschool programs.

c. *Personal function.* Personal functioning in preschool children pertains to self-care; *i.e.*, personal needs, health, and safety (feeding, dressing, toileting, bathing; maintaining personal hygiene, proper nutrition, sleep, health habits; adhering to medication or therapy regimens; following safety precautions). Development of self-care skills is measured in terms of the child's increasing ability to help himself/herself and to cooperate with others in taking care of these needs. Impaired ability in this area is manifested by failure to develop such skills, failure to use them, or self-injurious actions. This function may be documented by a standardized test of adaptive behavior or by a careful description of the full range of self-care activities. These activities are often observed not only at home but also in preschool programs.

d. *Concentration, persistence, or pace.* This function may be measured through observations of the child in the course of standardized testing and in the course of play.

3. *Primary school children (age 6 to attainment of age 12).* The measures of function here are similar to those for preschool-age children except that the test instruments may change and the capacity to function in the school setting is supplemental information. Standardized measures of academic achievement, e.g., Wide Range Achievement Test-Revised, Peabody Individual Achievement Test, etc., may be helpful in assessing cognitive impairment. Problems in social functioning, especially in the area of peer relationships, are often observed firsthand by teachers and school nurses. As described in 112.00D, *Documentation,* school records are an excellent source of information concerning function and standardized testing and should always be sought for school-age children.

As it applies to primary school children, the intent of the functional criterion described in paragraph B2d, *i.e.*, deficiencies of concentration, persistence, or pace resulting in failure to complete tasks in a timely manner, is to identify the child who cannot adequately function in primary school because of a mental impairment. Although grades and the need for special education placement are relevant factors which must be considered in reaching a decision under paragraph B2d, they are not conclusive. There is too much variability from school district to school district in the expected level of grading and in the criteria for special education placement to justify reliance solely on these factors.

4. *Adolescents (age 12 to attainment of age 18).* Functional criteria parallel to those for primary school children (cognitive/communicative; social; personal; and concentration, persistence, or pace) are the measures of severity for this age group. Testing instruments appropriate to adolescents should be used where indicated. Comparable findings of

disruption of social function must consider the capacity to form appropriate, stable, and lasting relationships. If information is available about cooperative working relationships in school or at part-time or full-time work, or about the ability to work as a member of a group, it should be considered when assessing the child's social functioning. Markedly impoverished social contact, isolation, withdrawal, and inappropriate or bizarre behavior under the stress of socializing with others also constitute comparable findings. (Note that self-injurious actions are evaluated in the personal area of functioning.)

a. Personal functioning in adolescents pertains to self-care. It is measured in the same terms as for younger children, the focus, however, being on the adolescent's ability to take care of his or her own personal needs, health, and safety without assistance. Impaired ability in this area is manifested by failure to take care of these needs or by self-injurious actions. This function may be documented by a standardized test of adaptive behavior or by careful descriptions of the full range of self-care activities.

b. In adolescents, the intent of the functional criterion described in paragraph B2d is the same as in primary school children, However, other evidence of this functional impairment may also be available, such as from evidence of the child's performance in work or work-like settings.

D. *Documentation:* 1. The presence of a mental disorder in a child must be documented on the basis of reports from acceptable sources of medical evidence. See §§404.1513 and 416.913. Descriptions of functional limitations may be available from these sources, either in the form of standardized test results or in other medical findings supplied by the sources, or both. (Medical findings consist of symptoms, signs, and laboratory findings.) Whenever possible, a medical source's findings should reflect the medical source's consideration of information from parents or other concerned individuals who are aware of the child's activities of daily living, social functioning, and ability to adapt to different settings and expectations, as well as the medical source's findings and observations on examination, consistent with standard clinical practice. As necessary, information from nonmedical sources, such as parents, should also be used to supplement the record of the child's functioning to establish the consistency of the medical evidence and longitudinality of impairment severity.

2. For some newborn and younger infants, it may be very difficult to document the presence or severity of a mental disorder. Therefore, with the exception of some genetic diseases and catastrophic congenital anomalies, it may be necessary to defer making a disability decision until the child attains age 3 months of age in order to obtain adequate observation of behavior or affect. See, also, 110.00 of this part. This period could be extended in cases of premature infants depending on the degree of prematurity and the adequacy of documentation of their developmental and emotional status.

3. For infants and toddlers, programs of early intervention involving occupational, physical, and speech therapists, nurses, social workers, and special educators, are a rich source of data. They can provide the developmental milestone evaluations and records on the fine and gross motor functioning of these children. This information is valuable and can complement the medical examination by a physician or psychologist. A report of an interdisciplinary team that contains the evaluation and signature of an acceptable medical source is considered acceptable medical evidence rather than supplemental data.

4. In children with mental disorders, particularly those requiring special placement, school records are a rich source of data, and the required reevaluations at specified time periods can provide the longitudinal data needed to trace impairment progression over time.

5. In some cases where the treating sources lack expertise in dealing with mental disorders of children, it may be necessary to obtain evidence from a psychiatrist, psychologist, or pediatrician with experience and skill in the diagnosis and treatment of mental disorders as they appear in children. In these cases, however, every reasonable effort must be made to obtain the records of the treating sources, since these records will help establish a longitudinal picture that cannot be established through a single purchased examination.

6. Reference to a ''standardized psychological test'' indicates the use of a psychological test measure that has appropriate validity, reliability, and norms, and is individually administered by a qualified specialist. By ''qualified,'' we mean the specialist must be currently licensed or certified in the State to administer, score, and interpret psychological tests and have the training and experience to perform the test.

7. Psychological tests are best considered as standardized sets of tasks or questions designed to elicit a range of responses. Psychological testing can also provide other useful data, such as the specialist's observations regarding the child's ability to sustain attention and concentration, relate appropriately to the specialist, and perform tasks independently (without prompts or reminders). Therefore, a report of test results should include both the objective data and any clinical observations.

8. The salient characteristics of a good test are: (1) Validity, *i.e.*, the test measures what it is supposed to measure; (2) reliability, *i.e.*, the consistency of results obtained over time with the same test and the same individual;

(3) appropriate normative data, *i.e.*, individual test scores can be compared to test data from other individuals or groups of a similar nature, representative of that population; and (4) wide scope of measurement, *i.e.*, the test should measure a broad range of facets/aspects of the domain being assessed. In considering the validity of a test result, we should note and resolve any discrepancies between formal test results and the child's customary behavior and daily activities.

9. Identical IQ scores obtained from different tests do not always reflect a similar degree of intellectual functioning. The IQ scores in listing 112.05 reflect values from tests of general intelligence that have a mean of 100 and a standard deviation of 15, e.g., the Wechsler series. IQs obtained from standardized tests that deviate significantly from a mean of 100 and standard deviation of 15 require conversion to a percentile rank so that the actual degree of limitation reflected by the IQ scores can be determined. In cases where more than one IQ is customarily derived from the test administered, e.g., where verbal, performance, and full scale IQs are provided in the Wechsler series, the lowest of these is used in conjunction with listing 112.05.

10. IQ test results must also be sufficiently current for accurate assessment under 112.05. Generally, the results of IQ tests tend to stabilize by the age of 16. Therefore, IQ test results obtained at age 16 or older should be viewed as a valid indication of the child's current status, provided they are compatible with the child's current behavior. IQ test results obtained between ages 7 and 16 should be considered current for 4 years when the tested IQ is less than 40, and for 2 years when the IQ is 40 or above. IQ test results obtained before age 7 are current for 2 years if the tested IQ is less than 40 and 1 year if at 40 or above.

11. Standardized intelligence test results are essential to the adjudication of all cases of intellectual disability that are not covered under the provisions of listings 112.05A, 112.05B, and 112.05F. Listings 112.05A, 112.05B, and 112.05F may be the bases for adjudicating cases where the results of standardized intelligence tests are unavailable, e.g., where the child's young age or condition precludes formal standardized testing.

12. In conjunction with clinical examinations, sources may report the results of screening tests, *i.e.*, tests used for gross determination of level of functioning. Screening instruments may be useful in uncovering potentially serious impairments, but often must be supplemented by other data. However, in some cases the results of screening tests may show such obvious abnormalities that further testing will clearly be unnecessary.

13. Where reference is made to developmental milestones, this is defined as the attainment of particular mental or motor skills at an age-appropriate level, *i.e.*, the skills achieved by an infant or toddler sequentially and within a given time period in the motor and manipulative areas, in general understanding and social behavior, in self-feeding, dressing, and toilet training, and in language. This is sometimes expressed as a developmental quotient (DQ), the relation between developmental age and chronological age as determined by specific standardized measurements and observations. Such tests include, but are not limited to, the Cattell Infant Intelligence Scale, the Bayley Scales of Infant Development, and the Revised Stanford-Binet. Formal tests of the attainment of developmental milestones are generally used in the clinical setting for determination of the developmental status of infants and toddlers.

14. Formal psychological tests of cognitive functioning are generally in use for preschool children, for primary school children, and for adolescents except for those instances noted below.

15. Generally, it is preferable to use IQ measures that are wide in scope and include items that test both verbal and performance abilities. However, in special circumstances, such as the assessment of children with sensory, motor, or communication abnormalities, or those whose culture and background are not principally English-speaking, measures such as the Test of Nonverbal Intelligence, Third Edition (TONI–3), Leiter International Performance Scale-Revised (Leiter-R), or Peabody Picture Vocabulary Test—Third Edition (PPVT-III) may be used.

16. We may consider exceptions for formal standardized psychological testing when an individual qualified by training and experience to perform such an evaluation is not available, or in cases where appropriate standardized measures for the child's social, linguistic, and cultural background are not available. In these cases, the best indicator of severity is often the level of adaptive functioning and how the child performs activities of daily living and social functioning.

17. Comprehensive neuropsychological examinations may be used to establish the existence and extent of compromise of brain function, particularly in cases involving organic mental disorders. Normally these examinations include assessment of cerebral dominance, basic sensation and perception, motor speed and coordination, attention and concentration, visual-motor function, memory across verbal and visual modalities, receptive and expressive speech, higher-order linguistic operations, problem-solving, abstraction ability, and general intelligence. In addition, there should be a clinical interview geared toward evaluating pathological features known to occur frequently in neurological disease and trauma, e.g., emotional

lability, abnormality of mood, impaired impulse control, passivity and apathy, or inappropriate social behavior. The specialist performing the examination may administer one of the commercially available comprehensive neuropsychological batteries, such as the Luria-Nebraska or Halstead-Reitan, or a battery of tests selected as relevant to the suspected brain dysfunction. The specialist performing the examination must be properly trained in this area of neuroscience.

E. *Effect of Hospitalization or Residential Placement:* As with adults, children with mental disorders may be placed in a variety of structured settings outside the home as part of their treatment. Such settings include, but are not limited to, psychiatric hospitals, developmental disabilities facilities, residential treatment centers and schools, community-based group homes, and workshop facilities. The reduced mental demands of such structured settings may attenuate overt symptomatology and superficially make the child's level of adaptive functioning appear better than it is. Therefore, the capacity of the child to function outside highly structured settings must be considered in evaluating impairment severity. This is done by determining the degree to which the child can function (based upon age-appropriate expectations) independently, appropriately, effectively, and on a sustained basis outside the highly structured setting.

On the other hand, there may be a variety of causes for placement of a child in a structured setting which may or may not be directly related to impairment severity and functional ability. Placement in a structured setting in and of itself does not equate with a finding of disability. The severity of the impairment must be compared with the requirements of the appropriate listing.

F. *Effects of Medication:* Attention must be given to the effect of medication on the child's signs, symptoms, and ability to function. While drugs used to modify psychological functions and mental states may control certain primary manifestations of a mental disorder, e.g., hallucinations, impaired attention, restlessness, or hyperactivity, such treatment may not affect all functional limitations imposed by the mental disorder. In cases where overt symptomatology is attenuated by the use of such drugs, particular attention must be focused on the functional limitations that may persist. These functional limitations must be considered in assessing impairment severity.

Psychotropic medicines used in the treatment of some mental illnesses may cause drowsiness, blunted affect, or other side effects involving other body systems. Such side effects must be considered in evaluating overall impairment severity.

112.01 Category of Impairments, Mental

112.02 *Organic Mental Disorders:* Abnormalities in perception, cognition, affect, or behavior associated with dysfunction of the brain. The history and physical examination or laboratory tests, including psychological or neuropsychological tests, demonstrate or support the presence of an organic factor judged to be etiologically related to the abnormal mental state and associated deficit or loss of specific cognitive abilities, or affective changes, or loss of previously acquired functional abilities.

The required level of severity for these disorders is met when the requirements in both A and B are satisfied.

A. Medically documented persistence of at least one of the following:

1. Developmental arrest, delay or regression; or

2. Disorientation to time and place; or

3. Memory impairment, either short-term (inability to learn new information), intermediate, or long-term (inability to remember information that was known sometime in the past); or

4. Perceptual or thinking disturbance (e.g., hallucinations, delusions, illusions, or paranoid thinking); or

5. Disturbance in personality (e.g., apathy, hostility); or

6. Disturbance in mood (e.g., mania, depression); or

7. Emotional lability (e.g., sudden crying); or

8. Impairment of impulse control (e.g., disinhibited social behavior, explosive temper outbursts); or

9. Impairment of cognitive function, as measured by clinically timely standardized psychological testing; or

10. Disturbance of concentration, attention, or judgment;

AND

B. Select the appropriate age group to evaluate the severity of the impairment:

1. For older infants and toddlers (age 1 to attainment of age 3), resulting in at least one of the following:

a. Gross or fine motor development at a level generally acquired by children no more than one-half the child's chronological age, documented by:

(1) An appropriate standardized test; or

(2) Other medical findings (see 112.00C); or

b. Cognitive/communicative function at a level generally acquired by children no more than one-half the child's chronological age, documented by:

(1) An appropriate standardized test; or

(2) Other medical findings of equivalent cognitive/communicative abnormality, such as the inability to use simple verbal or nonverbal behavior to communicate basic needs or concepts; or

c. Social function at a level generally acquired by children no more than one-half the child's chronological age, documented by:

(1) An appropriate standardized test; or

(2) Other medical findings of an equivalent abnormality of social functioning, exemplified by serious inability to achieve age-appropriate autonomy as manifested by excessive clinging or extreme separation anxiety; or

d. Attainment of development or function generally acquired by children no more than two-thirds of the child's chronological age in two or more areas covered by a., b., or c., as measured by an appropriate standardized test or other appropriate medical findings.

2. For children (age 3 to attainment of age 18), resulting in at least two of the following:

a. Marked impairment in age-appropriate cognitive/communicative function, documented by medical findings (including consideration of historical and other information from parents or other individuals who have knowledge of the child, when such information is needed and available) and including, if necessary, the results of appropriate standardized psychological tests, or for children under age 6, by appropriate tests of language and communication; or

b. Marked impairment in age-appropriate social functioning, documented by history and medical findings (including consideration of information from parents or other individuals who have knowledge of the child, when such information is needed and available) and including, if necessary, the results of appropriate standardized tests; or

c. Marked impairment in age-appropriate personal functioning, documented by history and medical findings (including consideration of information from parents or other individuals who have knowledge of the child, when such information is needed and available) and including, if necessary, appropriate standardized tests; or

d. Marked difficulties in maintaining concentration, persistence, or pace.

112.03 *Schizophrenic, Delusional (Paranoid), Schizoaffective, and Other Psychotic Disorders:* Onset of psychotic features, characterized by a marked disturbance of thinking, feeling, and behavior, with deterioration from a previous level of functioning or failure to achieve the expected level of social functioning.

The required level of severity for these disorders is met when the requirements in both A and B are satisfied.

A. Medically documented persistence, for at least 6 months, either continuous or intermittent, of one or more of the following:

1. Delusions or hallucinations; or

2. Catatonic, bizarre, or other grossly disorganized behavior; or

3. Incoherence, loosening of associations, illogical thinking, or poverty of content of speech; or

4. Flat, blunt, or inappropriate affect; or

5. Emotional withdrawal, apathy, or isolation;

AND

B. For older infants and toddlers (age 1 to attainment of age 3), resulting in at least one of the appropriate age-group criteria in paragraph B1 of 112.02; or, for children (age 3 to attainment of age 18), resulting in at least two of the appropriate age-group criteria in paragraph B2 of 112.02.

112.04 *Mood Disorders:* Characterized by a disturbance of mood (referring to a prolonged emotion that colors the whole psychic life, generally involving either depression or elation), accompanied by a full or partial manic or depressive syndrome.

The required level of severity for these disorders is met when the requirements in both A and B are satisfied.

A. Medically documented persistence, either continuous or intermittent, of one of the following:

1. Major depressive syndrome, characterized by at least five of the following, which must include either depressed or irritable mood or markedly diminished interest or pleasure:

a. Depressed or irritable mood; or

b. Markedly diminished interest or pleasure in almost all activities; or

c. Appetite or weight increase or decrease, or failure to make expected weight gains; or

d. Sleep disturbance; or

e. Psychomotor agitation or retardation; or

f. Fatigue or loss of energy; or

g. Feelings of worthlessness or guilt; or

h. Difficulty thinking or concentrating; or

i. Suicidal thoughts or acts; or

j. Hallucinations, delusions, or paranoid thinking;

OR

2. Manic syndrome, characterized by elevated, expansive, or irritable mood, and at least three of the following:

a. Increased activity or psychomotor agitation; or

b. Increased talkativeness or pressure of speech; or

c. Flight of ideas or subjectively experienced racing thoughts; or

d. Inflated self-esteem or grandiosity; or

e. Decreased need for sleep; or

f. Easy distractibility; or

g. Involvement in activities that have a high potential of painful consequences which are not recognized; or

h. Hallucinations, delusions, or paranoid thinking;

OR

3. Bipolar or cyclothymic syndrome with a history of episodic periods manifested by the full symptomatic picture of both manic and depressive syndromes (and currently or most

recently characterized by the full or partial symptomatic picture of either or both syndromes);

AND

B. For older infants and toddlers (age 1 to attainment of age 3), resulting in at least one of the appropriate age-group criteria in paragraph B1 of 112.02; or, for children (age 3 to attainment of age 18), resulting in at least two of the appropriate age-group criteria in paragraph B2 of 112.02.

112.05 *Intellectual Disability:* Characterized by significantly subaverage general intellectual functioning with deficits in adaptive functioning.

The required level of severity for this disorder is met when the requirements in A, B, C, D, E, or F are satisfied.

A. For older infants and toddlers (age 1 to attainment of age 3), resulting in at least one of the appropriate age-group criteria in paragraph B1 of 112.02; or, for children (age 3 to attainment of age 18), resulting in at least two of the appropriate age-group criteria in paragraph B2 of 112.02;

OR

B. Mental incapacity evidenced by dependence upon others for personal needs (grossly in excess of age-appropriate dependence) and inability to follow directions such that the use of standardized measures of intellectual functioning is precluded;

OR

C. A valid verbal, performance, or full scale IQ of 59 or less;

OR

D. A valid verbal, performance, or full scale IQ of 60 through 70 and a physical or other mental impairment imposing an additional and significant limitation of function;

OR

E. A valid verbal, performance, or full scale IQ of 60 through 70 and:

1. For older infants and toddlers (age 1 to attainment of age 3), resulting in attainment of development or function generally acquired by children no more than two-thirds of the child's chronological age in either paragraphs B1a or B1c of 112.02; or

2. For children (age 3 to attainment of age 18), resulting in at least one of paragraphs B2b or B2c or B2d of 112.02;

OR

F. Select the appropriate age group:

1. For older infants and toddlers (age 1 to attainment of age 3), resulting in attainment of development or function generally acquired by children no more than two-thirds of the child's chronological age in paragraph B1b of 112.02, and a physical or other mental impairment imposing an additional and significant limitation of function;

OR

2. For children (age 3 to attainment of age 18), resulting in the satisfaction of 112.02B2a, and a physical or other mental impairment imposing an additional and significant limitation of function.

112.06 *Anxiety Disorders:* In these disorders, anxiety is either the predominant disturbance or is experienced if the individual attempts to master symptoms, e.g., confronting the dreaded object or situation in a phobic disorder, attempting to go to school in a separation anxiety disorder, resisting the obsessions or compulsions in an obsessive compulsive disorder, or confronting strangers or peers in avoidant disorders.

The required level of severity for these disorders is met when the requirements in both A and B are satisfied.

A. Medically documented findings of at least one of the following:

1. Excessive anxiety manifested when the child is separated, or separation is threatened, from a parent or parent surrogate; or

2. Excessive and persistent avoidance of strangers; or

3. Persistent unrealistic or excessive anxiety and worry (apprehensive expectation), accompanied by motor tension, autonomic hyperactivity, or vigilance and scanning; or

4. A persistent irrational fear of a specific object, activity, or situation which results in a compelling desire to avoid the dreaded object, activity, or situation; or

5. Recurrent severe panic attacks, manifested by a sudden unpredictable onset of intense apprehension, fear, or terror, often with a sense of impending doom, occurring on the average of at least once a week; or

6. Recurrent obsessions or compulsions which are a source of marked distress; or

7. Recurrent and intrusive recollections of a traumatic experience, including dreams, which are a source of marked distress;

AND

B. For older infants and toddlers (age 1 to attainment of age 3), resulting in at least one of the appropriate age-group criteria in paragraph B1 of 112.02; or, for children (age 3 to attainment of age 18), resulting in at least two of the appropriate age-group criteria in paragraph B2 of 112.02.

112.07 *Somatoform, Eating, and Tic Disorders:* Manifested by physical symptoms for which there are no demonstrable organic findings or known physiologic mechanisms; or eating or tic disorders with physical manifestations.

The required level of severity for these disorders is met when the requirements in both A and B are satisfied.

A. Medically documented findings of one of the following:

1. An unrealistic fear and perception of fatness despite being underweight, and persistent refusal to maintain a body weight

which is greater than 85 percent of the average weight for height and age, as shown in the most recent edition of the *Nelson Textbook of Pediatrics*, Richard E. Behrman and Victor C. Vaughan, III, editors, Philadelphia: W. B. Saunders Company; or

2. Persistent and recurrent involuntary, repetitive, rapid, purposeless motor movements affecting multiple muscle groups with multiple vocal tics; or

3. Persistent nonorganic disturbance of one of the following:

a. Vision; or

b. Speech; or

c. Hearing; or

d. Use of a limb; or

e. Movement and its control (e.g., coordination disturbance, psychogenic seizures); or

f. Sensation (diminished or heightened); or

g. Digestion or elimination; or

4. Preoccupation with a belief that one has a serious disease or injury;

AND

B. For older infants and toddlers (age 1 to attainment of age 3), resulting in at least one of the appropriate age-group criteria in paragraph B1 of 112.02; or, for children (age 3 to attainment of age 18), resulting in at least two of the appropriate age-group criteria in paragraph B2 of 112.02.

112.08 *Personality Disorders:* Manifested by pervasive, inflexible, and maladaptive personality traits, which are typical of the child's long-term functioning and not limited to discrete episodes of illness.

The required level of severity for these disorders is met when the requirements in both A and B are satisfied.

A. Deeply ingrained, maladaptive patterns of behavior, associated with one of the following:

1. Seclusiveness or autistic thinking; or

2. Pathologically inappropriate suspiciousness or hostility; or

3. Oddities of thought, perception, speech, and behavior; or

4. Persistent disturbances of mood or affect; or

5. Pathological dependence, passivity, or aggressiveness; or

6. Intense and unstable interpersonal relationships and impulsive and exploitative behavior; or

7. Pathological perfectionism and inflexibility;

AND

B. For older infants and toddlers (age 1 to attainment of age 3), resulting in at least one of the appropriate age-group criteria in paragraph B1 of 112.02; or, for children (age 3 to attainment of age 18), resulting in at least two of the appropriate age-group criteria in paragraph B2 of 112.02.

112.09 *Psychoactive Substance Dependence Disorders:* Manifested by a cluster of cognitive, behavioral, and physiologic symptoms that indicate impaired control of psychoactive substance use with continued use of the substance despite adverse consequences.

The required level of severity for these disorders is met when the requirements in both A and B are satisfied.

A. Medically documented findings of at least four of the following:

1. Substance taken in larger amounts or over a longer period than intended and a great deal of time is spent in recovering from its effects; or

2. Two or more unsuccessful efforts to cut down or control use; or

3. Frequent intoxication or withdrawal symptoms interfering with major role obligations; or

4. Continued use despite persistent or recurring social, psychological, or physical problems; or

5. Tolerance, as characterized by the requirement for markedly increased amounts of substance in order to achieve intoxication; or

6. Substance taken to relieve or avoid withdrawal symptoms;

AND

B. For older infants and toddlers (age 1 to attainment of age 3), resulting in at least one of the appropriate age-group criteria in paragraph B1 of 112.02; or, for children (age 3 to attainment of age 18), resulting in at least two of the appropriate age-group criteria in paragraph B2 of 112.02.

112.10 *Autistic Disorder and Other Pervasive Developmental Disorders:* Characterized by qualitative deficits in the development of reciprocal social interaction, in the development of verbal and nonverbal communication skills, and in imaginative activity. Often, there is a markedly restricted repertoire of activities and interests, which frequently are stereotyped and repetitive.

The required level of severity for these disorders is met when the requirements in both A and B are satisfied.

A. Medically documented findings of the following:

1. For autistic disorder, all of the following:

a. Qualitative deficits in the development of reciprocal social interaction; and

b. Qualitative deficits in verbal and nonverbal communication and in imaginative activity; and

c. Markedly restricted repertoire of activities and interests;

OR

2. For other pervasive developmental disorders, both of the following:

a. Qualitative deficits in the development of reciprocal social interaction; and

b. Qualitative deficits in verbal and nonverbal communication and in imaginative activity;

AND

B. For older infants and toddlers (age 1 to attainment of age 3), resulting in at least one of the appropriate age-group criteria in paragraph B1 of 112.02; or, for children (age 3 to attainment of age 18), resulting in at least two of the appropriate age-group criteria in paragraphs B2 of 112.02.

112.11 *Attention Deficit Hyperactivity Disorder:* Manifested by developmentally inappropriate degrees of inattention, impulsiveness, and hyperactivity.

The required level of severity for these disorders is met when the requirements in both A and B are satisfied.

A. Medically documented findings of all three of the following:

1. Marked inattention; and
2. Marked impulsiveness; and
3. Marked hyperactivity;

AND

B. For older infants and toddlers (age 1 to attainment of age 3), resulting in at least one of the appropriate age-group criteria in paragraph B1 of 112.02; or, for children (age 3 to attainment of age 18), resulting in at least two of the appropriate age-group criteria in paragraph B2 of 112.02.

112.12 *Developmental and Emotional Disorders of Newborn and Younger Infants (Birth to attainment of age 1):* Developmental or emotional disorders of infancy are evidenced by a deficit or lag in the areas of motor, cognitive/communicative, or social functioning. These disorders may be related either to organic or to functional factors or to a combination of these factors.

The required level of severity for these disorders is met when the requirements of A, B, C, D, or E are satisfied.

A. Cognitive/communicative functioning generally acquired by children no more than one-half the child's chronological age, as documented by appropriate medical findings (e.g., in infants 0–6 months, markedly diminished variation in the production or imitation of sounds and severe feeding abnormality, such as problems with sucking swallowing, or chewing) including, if necessary, a standardized test;

OR

B. Motor development generally acquired by children no more than one-half the child's chronological age, documented by appropriate medical findings, including if necessary, a standardized test;

OR

C. Apathy, over-excitability, or fearfulness, demonstrated by an absent or grossly excessive response to one of the following:

1. Visual stimulation; or
2. Auditory stimulation; or
3. Tactile stimulation;

OR

D. Failure to sustain social interaction on an ongoing, reciprocal basis as evidenced by:

1. Inability by 6 months to participate in vocal, visual, and motoric exchanges (including facial expressions); or
2. Failure by 9 months to communicate basic emotional responses, such as cuddling or exhibiting protest or anger; or
3. Failure to attend to the caregiver's voice or face or to explore an inanimate object for a period of time appropriate to the infant's age;

OR

E. Attainment of development or function generally acquired by children no more than two-thirds of the child's chronological age in two or more areas (*i.e.*, cognitive/communicative, motor, and social), documented by appropriate medical findings, including if necessary, standardized testing.

113.00 MALIGNANT NEOPLASTIC DISEASES

A. *What impairments do these listings cover?* We use these listings to evaluate all malignant neoplasms except certain neoplasms associated with human immunodeficiency virus (HIV) infection. We use the criteria in 114.08E to evaluate carcinoma of the cervix, Kaposi's sarcoma, lymphoma, and squamous cell carcinoma of the anal canal and anal margin if you also have HIV infection.

B. *What do we consider when we evaluate malignant neoplastic diseases under these listings?* We consider factors such as the:

1. Origin of the malignancy.
2. Extent of involvement.
3. Duration, frequency, and response to antineoplastic therapy. Antineoplastic therapy means surgery, irradiation, chemotherapy, hormones, immunotherapy, or bone marrow or stem cell transplantation. When we refer to surgery as an antineoplastic treatment, we mean surgical excision for treatment, not for diagnostic purposes.
4. Effects of any post-therapeutic residuals.

C. *How do we apply these listings?* We apply the criteria in a specific listing to a malignancy originating from that specific site.

D. *What evidence do we need?*

1. We need medical evidence that specifies the type, extent, and site of the primary, recurrent, or metastatic lesion. In the rare situation in which the primary site cannot be identified, we will use evidence documenting the site(s) of metastasis to evaluate the impairment under 13.27 in part A.
2. For operative procedures, including a biopsy or a needle aspiration, we generally need a copy of both the:
   a. Operative note.
   b. Pathology report.
3. When we cannot get these documents, we will accept the summary of hospitalization(s) or other medical reports. This evidence should include details of the findings

at surgery and, whenever appropriate, the pathological findings.

4. In some situations we may also need evidence about recurrence, persistence, or progression of the malignancy, the response to therapy, and any significant residuals. (*See* 113.00G.)

E. *When do we need longitudinal evidence?*

1. *Tumors with distant metastases.* Most malignant tumors of childhood consist of a local lesion with metastases to regional lymph nodes and, less often, distant metastases. We generally do not need longitudinal evidence for tumors that have metastasized beyond the regional lymph nodes because these tumors usually meet the requirements of a listing. Exceptions are for tumors with distant metastases that are expected to respond to antineoplastic therapy. For these exceptions, we usually need a longitudinal record of 3 months after therapy starts to determine whether the intended effect of therapy has been achieved and is likely to persist.

2. *Other malignancies.* When there are no distant metastases, many of the listings require that we consider your response to initial antineoplastic therapy; that is, the initial planned treatment regimen. This therapy may consist of a single modality or a combination of modalities; that is, multimodal therapy (see 113.00I2).

3. *Types of treatment.* Whenever the initial planned therapy is a single modality, enough time must pass to allow a determination about whether the therapy will achieve its intended effect. If the treatment fails, the failure will often happen within 6 months after treatment starts, and there will often be a change in the treatment regimen. Whenever the initial planned therapy is multimodal, a determination about the effectiveness of the therapy usually cannot be made until the effects of all the planned modalities can be determined. In some cases, we may need to defer adjudication until the effectiveness of therapy can be assessed. However, we do not need to defer adjudication to determine whether the therapy will achieve its intended effect if we can make a fully favorable determination or decision based on the length and effects of therapy, or the residuals of the malignancy or therapy (*see* 113.00G).

F. *How do we evaluate impairments that do not meet one of the malignant neoplastic diseases listings?*

1. These listings are only examples of malignant neoplastic diseases that we consider severe enough to result in marked and severe functional limitations. If your impairment(s) does not meet the criteria of any of these listings, we must also consider whether you have an impairment(s) that meets the criteria of a listing in another body system.

2. If you have a severe medically determinable impairment(s) that does not meet a listing, we will determine whether your impairment(s) medically equals a listing. (*See* §§404.1526 and 416.926.) If it does not, we will also consider whether you have an impairment(s) that functionally equals the listings. (*See* §416.926a.) We use the rules in §416.994a when we decide whether you continue to be disabled.

G. *How do we consider the effects of therapy?*

1. *How we consider the effects of therapy under the listings.* In many cases, malignancies meet listing criteria only if the therapy does not achieve the intended effect: the malignancy persists, progresses, or recurs despite treatment. However, as explained in the following paragraphs, we will not delay adjudication if we can make a fully favorable determination or decision based on the evidence in the case record.

2. *Effects can vary widely.*

a. Because the therapy and its toxicity may vary widely, we consider each case on an individual basis. We will request a specific description of the therapy, including these items:

i. Drugs given.

ii. Dosage.

iii. Frequency of drug administration.

iv. Plans for continued drug administration.

v. Extent of surgery.

vi. Schedule and fields of radiation therapy.

b. We will also request a description of the complications or adverse effects of therapy, such as the following:

i. Continuing gastrointestinal symptoms.

ii. Persistent weakness.

iii. Neurological complications.

iv. Cardiovascular complications.

v. Reactive mental disorders.

3. *Effects of therapy may change.* Because the severity of the adverse effects of antineoplastic therapy may change during treatment, enough time must pass to allow us to evaluate the therapy's effect. The residual effects of treatment are temporary in most instances. But on occasion, the effects may be disabling for a consecutive period of at least 12 months.

4. *When the initial antineoplastic therapy is effective.* We evaluate any post-therapeutic residual impairment(s) not included in these listings under the criteria for the affected body system. We must consider any complications of therapy. When the residual impairment(s) does not meet a listed impairment, we must consider whether it medically equals a listing, or, as appropriate, functionally equals the listings.

H. *How long do we consider your impairment to be disabling?*

1. In some listings, we specify that we will consider your impairment to be disabling until a particular point in time (for example, at least 12 months from the date of diagnosis). We may consider your impairment to

be disabling beyond this point when the medical and other evidence justifies it.

2. When a listing does not contain such a specification, we will consider an impairment(s) that meets or medically equals a listing in this body system to be disabling until at least 3 years after onset of complete remission. When the impairment(s) has been in complete remission for at least 3 years, that is, the original tumor or a recurrence (or relapse) and any metastases have not been evident for at least 3 years, the impairment(s) will no longer meet or medically equal the criteria of a listing in this body system.

3. Following the appropriate period, we will consider any residuals, including residuals of the malignancy or therapy (*see* 113.00G), in determining whether you are disabled. If you have a recurrence or relapse of your malignancy, your impairment may meet or medically equal one of the listings in this body system again.

I. *What do we mean by the following terms?*

1. *Metastases:* The spread of tumor cells by blood, lymph, or other body fluid. This term does not include the spread of tumor cells by direct extension of the tumor to other tissue or organs.

2. *Multimodal therapy:* A combination of at least two types of treatment modalities given in close proximity as a unified whole and usually planned before any treatment has begun. There are three types of treatment modalities: Surgery, radiation, and systemic drug therapy (chemotherapy, hormonal therapy, and immunotherapy). Examples of multimodal therapy include:

a. Surgery followed by chemotherapy or radiation.

b. Chemotherapy followed by surgery.

c. Chemotherapy and concurrent radiation.

3. *Persistent:* Failure to achieve a complete remission.

4. *Progressive:* The malignancy becomes more extensive despite treatment.

5. *Recurrent, relapse:* A malignancy that was in complete remission or entirely removed by surgery has returned.

J. *Can we establish the existence of a disabling impairment prior to the date of the evidence that shows the malignancy satisfies the criteria of a listing?* Yes. We will consider factors such as:

1. The type of malignancy and its location.

2. The extent of involvement when the malignancy was first demonstrated.

3. Your symptoms.

K. *How do we evaluate specific malignant neoplastic diseases?*

1. *Lymphoma.*

a. We provide criteria for evaluating aggressive lymphomas that have not responded to antineoplastic therapy in 113.05. Indolent (non-aggressive) lymphomas are rare in children. We will evaluate indolent lymphomas in children under 13.05 in part A.

b. We consider Hodgkin's disease that recurs more than 12 months after completing initial antineoplastic therapy to be a new disease rather than a recurrence.

c. Many children with lymphoma are treated according to a long-term protocol that can result in significant adverse medical, social, and emotional consequences. (*See* 113.00G.)

2. *Leukemia.*

a. *Acute leukemia.* The initial diagnosis of acute leukemia, including the accelerated or blast phase of chronic myelogenous (granulocytic) leukemia, is based upon definitive bone marrow examination. Additional diagnostic information is based on chromosomal analysis, cytochemical and surface marker studies on the abnormal cells, or other methods consistent with the prevailing state of medical knowledge and clinical practice. Recurrent disease must be documented by peripheral blood, bone marrow, or cerebrospinal fluid examination, or by testicular biopsy. The initial and follow-up pathology reports should be included.

b. *Chronic myelogenous leukemia (CML).* The diagnosis of CML should be based upon documented granulocytosis, including immature forms such as differentiated or undifferentiated myelocytes and myeloblasts, and a chromosomal analysis that demonstrates the Philadelphia chromosome. In the absence of a chromosomal analysis, or if the Philadelphia chromosome is not present, the diagnosis may be made by other methods consistent with the prevailing state of medical knowledge and clinical practice.

c. *Juvenile chronic myelogenous leukemia (JCML).* JCML is a rare, Philadelphia-chromosome-negative childhood leukemia that is aggressive and clinically similar to acute myelogenous leukemia. We evaluate JCML under 113.06A.

d. *Elevated white cell count.* In cases of chronic leukemia, an elevated white cell count, in itself, is not ordinarily a factor in determining the severity of the impairment.

3. *Malignant solid tumors.* The tumors we consider under 113.03 include the histiocytosis syndromes except for solitary eosinophilic granuloma. Therefore, we will not evaluate brain tumors (*see* 113.13) or thyroid tumors (*see* 113.09) under this listing.

4. *Brain tumors.* We use the criteria in 113.13 to evaluate malignant brain tumors. We consider a brain tumor to be malignant if it is classified as grade II or higher under the World Health Organization (WHO) classification of tumors of the central nervous system (*WHO Classification of Tumours of the Central Nervous System*, 2007). We evaluate any complications of malignant brain tumors, such as resultant neurological or psychological impairments, under the criteria for the affected body system. We evaluate benign brain tumors under 111.05.

5. *Retinoblastoma*. The treatment for bilateral retinoblastoma usually results in a visual impairment. We will evaluate any resulting visual impairment under 102.02.

L. *How do we evaluate malignant neoplastic diseases treated by bone marrow or stem cell transplantation?* Bone marrow or stem cell transplantation is performed for a variety of malignant neoplastic diseases.

1. *Acute leukemia (including T-cell lymphoblastic lymphoma and JCML) or accelerated or blast phase of CML*. If you undergo bone marrow or stem cell transplantation for any of these disorders, we will consider you to be disabled until at least 24 months from the date of diagnosis or relapse, or at least 12 months from the date of transplantation, whichever is later.

2. *Lymphoma or chronic phase of CML*. If you undergo bone marrow or stem cell transplantation for any of these disorders, we will consider you to be disabled until at least 12 months from the date of transplantation.

3. *Evaluating disability after the appropriate time period has elapsed*. We consider any residual impairment(s), such as complications arising from:

a. Graft-versus-host (GVH) disease.

b. Immunosuppressant therapy, such as frequent infections.

c. Significant deterioration of other organ systems.

113.01 Category of Impairments, Malignant Neoplastic Diseases

113.03 *Malignant solid tumors*. Consider under a disability:

A. For 2 years from the date of initial diagnosis. Thereafter, evaluate any residual impairment(s) under the criteria for the affected body system.

OR

B. For 2 years from the date of recurrence of active disease. Thereafter, evaluate any residual impairment(s) under the criteria for the affected body system.

113.05 *Lymphoma (excluding T-cell lymphoblastic lymphoma—113.06)*. (*See* 113.00K1.)

A. Non-Hodgkins lymphoma, including Burkitt's and anaplastic large cell. Persistent or recurrent following initial antineoplastic therapy.

OR

B. Hodgkin's disease with failure to achieve clinically complete remission, or recurrent disease within 12 months of completing initial antineoplastic therapy.

OR

C. With bone marrow or stem cell transplantation. Consider under a disability until at least 12 months from the date of transplantation. Thereafter, evaluate any residual impairment(s) under the criteria of the affected body system.

113.06 *Leukemia*. (*See* 113.00K2.)

A. Acute leukemia (including T-cell lymphoblastic lymphoma and juvenile chronic myelogenous leukemia (JCML)). Consider under a disability until at least 24 months from the date of diagnosis or relapse, or at least 12 months from the date of bone marrow or stem cell transplantation, whichever is later. Thereafter, evaluate any residual impairment(s) under the criteria for the affected body system.

OR

B. Chronic myelogenous leukemia (except JCML), as described in 1 or 2:

1. Accelerated or blast phase. Consider under a disability until at least 24 months from the date of diagnosis or relapse, or at least 12 months from the date of bone marrow or stem cell transplantation, whichever is later. Thereafter, evaluate any residual impairment(s) under the criteria for the affected body system.

2. Chronic phase, as described in a or b:

a. Consider under a disability until at least 12 months from the date of bone marrow or stem cell transplantation. Thereafter, evaluate any residual impairment(s) under the criteria for the affected body system.

b. Progressive disease following initial antineoplastic therapy.

113.09 *Thyroid gland*.

A. Anaplastic (undifferentiated) carcinoma.

OR

B. Carcinoma with metastases beyond the regional lymph nodes progressive despite radioactive iodine therapy.

OR

C. Medullary carcinoma with metastases beyond the regional lymph nodes.

113.12 *Retinoblastoma*.

A. With extension beyond the orbit.

OR

B. Persistent or recurrent following initial antineoplastic therapy.

OR

C. With regional or distant metastases.

113.13 *Brain tumors*. (See 113.00K4.) Highly malignant tumors, such as medulloblastoma or other primitive neuroectodermal tumors (PNETs) with documented metastases, grades III and IV astrocytomas, glioblastoma multiforme, ependymoblastoma, diffuse intrinsic brain stem gliomas, or primary sarcomas.

113.21 *Neuroblastoma*.

A. With extension across the midline.

OR

B. With distant metastases.

OR

C. Recurrent.

OR

D. With onset at age 1 year or older.

114.00 IMMUNE SYSTEM DISORDERS

A. What disorders do we evaluate under the immune system disorders listings?

1. *We evaluate immune system disorders that cause dysfunction in one or more components of your immune system.*

a. The dysfunction may be due to problems in antibody production, impaired cell-mediated immunity, a combined type of antibody/cellular deficiency, impaired phagocytosis, or complement deficiency.

b. Immune system disorders may result in recurrent and unusual infections, or inflammation and dysfunction of the body's own tissues. Immune system disorders can cause a deficit in a single organ or body system that results in extreme (that is, very serious) loss of function. They can also cause lesser degrees of limitations in two or more organs or body systems, and when associated with symptoms or signs, such as severe fatigue, fever, malaise, diffuse musculoskeletal pain, or involuntary weight loss, can also result in extreme limitation. In children, immune system disorders or their treatment may also affect growth, development, and the performance of age-appropriate activities.

c. We organize the discussions of immune system disorders in three categories: Autoimmune disorders; Immune deficiency disorders, excluding human immunodeficiency virus (HIV) infection; and HIV infection.

2. *Autoimmune disorders (114.00D).* Autoimmune disorders are caused by dysfunctional immune responses directed against the body's own tissues, resulting in chronic, multisystem impairments that differ in clinical manifestations, course, and outcome. They are sometimes referred to as rheumatic diseases, connective tissue disorders, or collagen vascular disorders. Some of the features of autoimmune disorders in children differ from the features of the same disorders in adults. The impact of the disorders or their treatment on physical, psychological, and developmental growth of pre-pubertal children may be considerable, and often differs from that of post-pubertal adolescents or adults.

3. *Immune deficiency disorders, excluding HIV infection (114.00E).* Immune deficiency disorders are characterized by recurrent or unusual infections that respond poorly to treatment, and are often associated with complications affecting other parts of the body. Immune deficiency disorders are classified as either *primary* (congenital) or *acquired*. Children with immune deficiency disorders also have an increased risk of malignancies and of having autoimmune disorders.

4. *Human immunodeficiency virus (HIV) infection (114.00F).* HIV infection may be characterized by increased susceptibility to opportunistic infections, cancers, or other conditions, as described in 114.08.

B. What information do we need to show that you have an immune system disorder?

Generally, we need your medical history, a report(s) of a physical examination, a report(s) of laboratory findings, and in some instances, appropriate medically acceptable imaging or tissue biopsy reports to show that you have an immune system disorder. Therefore, we will make every reasonable effort to obtain your medical history, medical findings, and results of laboratory tests. We explain the information we need in more detail in the sections below.

C. Definitions

1. *Appropriate medically acceptable imaging* includes, but is not limited to, angiography, x-ray imaging, computerized axial tomography (CAT scan) or magnetic resonance imaging (MRI), with or without contrast material, myelography, and radionuclear bone scans. ''Appropriate'' means that the technique used is the proper one to support the evaluation and diagnosis of the impairment.

2. *Constitutional symptoms or signs,* as used in these listings, means severe fatigue, fever, malaise, or involuntary weight loss. *Severe fatigue* means a frequent sense of exhaustion that results in significantly reduced physical activity or mental function. *Malaise* means frequent feelings of illness, bodily discomfort, or lack of well-being that result in significantly reduced physical activity or mental function.

3. *Disseminated* means that a condition is spread over a considerable area. The type and extent of the spread will depend on your specific disease.

4. *Dysfunction* means that one or more of the body regulatory mechanisms are impaired, causing either an excess or deficiency of immunocompetent cells or their products.

5. *Extra-articular* means ''other than the joints''; for example, an organ(s) such as the heart, lungs, kidneys, or skin.

6. *Inability to ambulate effectively* has the same meaning as in 101.00B2b.

7. *Inability to perform fine and gross movements effectively* has the same meaning as in 101.00B2c.

8. *Major peripheral joints* has the same meaning as in 101.00F.

9. *Persistent* means that a sign(s) or symptom(s) has continued over time. The precise meaning will depend on the specific immune system disorder, the usual course of the disorder, and the other circumstances of your clinical course.

10. *Recurrent* means that a condition that previously responded adequately to an appropriate course of treatment returns after a period of remission or regression. The precise meaning, such as the extent of response or remission and the time periods involved, will depend on the specific disease or condition you have, the body system affected, the

usual course of the disorder and its treatment, and the other facts of your particular case.

11. *Resistant to treatment* means that a condition did not respond adequately to an appropriate course of treatment. Whether a response is adequate or a course of treatment is appropriate will depend on the specific disease or condition you have, the body system affected, the usual course of the disorder and its treatment, and the other facts of your particular case.

12. *Severe* means medical severity as used by the medical community. The term does not have the same meaning as it does when we use it in connection with a finding at the second step of the sequential evaluation process in §416.924.

D. How do we document and evaluate the listed autoimmune disorders?

1. *Systemic lupus erythematosus (114.02).*

a. *General.* Systemic lupus erythematosus (SLE) is a chronic inflammatory disease that can affect any organ or body system. It is frequently, but not always, accompanied by constitutional symptoms or signs (severe fatigue, fever, malaise, involuntary weight loss). Major organ or body system involvement can include: Respiratory (pleuritis, pneumonitis), cardiovascular (endocarditis, myocarditis, pericarditis, vasculitis), renal (glomerulonephritis), hematologic (anemia, leukopenia, thrombocytopenia), skin (photosensitivity), neurologic (seizures), mental (anxiety, fluctuating cognition (''lupus fog''), mood disorders, organic brain syndrome, psychosis), or immune system disorders (inflammatory arthritis). Immunologically, there is an array of circulating serum auto-antibodies and pro- and anti-coagulant proteins that may occur in a highly variable pattern.

b. *Documentation of SLE.* Generally, but not always, the medical evidence will show that your SLE satisfies the criteria in the current ''Criteria for the Classification of Systemic Lupus Erythematosus'' by the American College of Rheumatology found in the most recent edition of the *Primer on the Rheumatic Diseases* published by the Arthritis Foundation.

2. *Systemic vasculitis (114.03).*

a. *General.*

(i) Vasculitis is an inflammation of blood vessels. It may occur acutely in association with adverse drug reactions, certain chronic infections, and occasionally, malignancies. More often, it is chronic and the cause is unknown. Symptoms vary depending on which blood vessels are involved. Systemic vasculitis may also be associated with other autoimmune disorders; for example, SLE or dermatomyositis.

(ii) Children can develop the vasculitis of Kawasaki disease, of which the most serious manifestation is formation of coronary artery aneurysms and related complications. We evaluate heart problems related to Kawasaki disease under the criteria in the cardiovascular listings (104.00). Children can also develop the vasculitis of anaphylactoid purpura (Henoch-Schoenlein purpura), which may cause intestinal and renal disorders. We evaluate intestinal and renal disorders related to vasculitis of anaphylactoid purpura under the criteria in the digestive (105.00) or genitourinary (106.00) listings. Other clinical patterns include, but are not limited to, polyarteritis nodosa, Takayasu's arteritis (aortic arch arteritis), and Wegener's granulomatosis.

b. *Documentation of systemic vasculitis.* Angiography or tissue biopsy confirms a diagnosis of systemic vasculitis when the disease is suspected clinically. When you have had angiography or tissue biopsy for systemic vasculitis, we will make every reasonable effort to obtain reports of the results of that procedure. However, we will not purchase angiography or tissue biopsy.

3. *Systemic sclerosis (scleroderma) (114.04).*

a. *General.* Systemic sclerosis (scleroderma) constitutes a spectrum of disease in which thickening of the skin is the clinical hallmark. Raynaud's phenomenon, often medically severe and progressive, is present frequently and may be the peripheral manifestation of a vasospastic abnormality in the heart, lungs, and kidneys. The CREST syndrome (calcinosis, Raynaud's phenomenon, esophageal dysmotility, sclerodactyly, and telangiectasia) is a variant that may slowly progress over years to the generalized process, systemic sclerosis.

b. *Diffuse cutaneous systemic sclerosis.* In diffuse cutaneous systemic sclerosis (also known as diffuse scleroderma), major organ or systemic involvement can include the gastrointestinal tract, lungs, heart, kidneys, and muscle in addition to skin or blood vessels. Although arthritis can occur, joint dysfunction results primarily from soft tissue/cutaneous thickening, fibrosis, and contractures.

c. *Localized scleroderma (linear scleroderma and morphea).*

(i) Localized scleroderma (linear scleroderma and morphea) is more common in children than systemic scleroderma. To assess the severity of the impairment, we need a description of the extent of involvement of linear scleroderma and the location of the lesions. For example, linear scleroderma involving the arm but not crossing any joints is not as functionally limiting as sclerodactyly (scleroderma localized to the fingers). Linear scleroderma of a lower extremity involving skin thickening and atrophy of underlying muscle or bone can result in contractures and leg length discrepancy. In such cases, we may evaluate your impairment under the musculoskeletal listings (101.00).

(ii) When there is isolated morphea of the face causing facial disfigurement from unilateral hypoplasia of the mandible, maxilla, zygoma, or orbit, adjudication may be more appropriate under the criteria in the affected body system, such as special senses and speech (102.00) or mental disorders (112.00).

(iii) Chronic variants of these syndromes include disseminated morphea, Shulman's disease (diffuse fasciitis with eosinophilia), and eosinophilia-myalgia syndrome (often associated with toxins such as toxic oil or contaminated tryptophan), all of which can impose medically severe musculoskeletal dysfunction and may also lead to restrictive pulmonary disease. We evaluate these variants of the disease under the criteria in the musculoskeletal listings (101.00) or respiratory system listings (103.00).

d. *Documentation of systemic sclerosis (scleroderma).* Documentation involves differentiating the clinical features of systemic sclerosis (scleroderma) from other autoimmune disorders. However, there may be an overlap.

4. *Polymyositis and dermatomyositis (114.05).*

a. *General.*

(i) Polymyositis and dermatomyositis are related disorders that are characterized by an inflammatory process in striated muscle, occurring alone or in association with other autoimmune disorders. The most common manifestations are symmetric weakness, and less frequently, pain and tenderness of the proximal limb-girdle (shoulder or pelvic) musculature. There may also be involvement of the cervical, cricopharyngeal, esophageal, intercostal, and diaphragmatic muscles.

(ii) Polymyositis occurs rarely in children; the more common presentation in children is dermatomyositis with symmetric proximal muscle weakness and characteristic skin findings. The clinical course of dermatomyositis can be more severe when it is accompanied by systemic vasculitis rather than just localized to striated muscle. Late in the disease, some children with dermatomyositis develop calcinosis of the skin and subcutaneous tissues, muscles, and joints. We evaluate the involvement of other organs/body systems under the criteria for the listings in the affected body system.

b. *Documentation of polymyositis and dermatomyositis.* Generally, but not always, polymyositis is associated with elevated serum muscle enzymes (creatine phosphokinase (CPK), aminotransferases, and aldolase), and characteristic abnormalities on electromyography and muscle biopsy. In children, the diagnosis of dermatomyositis is supported largely by medical history, findings on physical examination that include the characteristic skin findings, and elevated serum muscle enzymes. Muscle inflammation or vasculitis depicted on MRI is additional evidence supporting the diagnosis of childhood dermatomyositis. When you have had electromyography, muscle biopsy, or MRI for polymyositis or dermatomyositis, we will make every reasonable effort to obtain reports of the results of that procedure. However, we will not purchase electromyography, muscle biopsy, or MRI.

c. *Additional information about how we evaluate polymyositis and dermatomyositis under the listings.*

(i) In newborn and younger infants (birth to attainment of age 1), we consider muscle weakness that affects motor skills, such as head control, reaching, grasping, taking solids, or self-feeding, under 114.05A. In older infants and toddlers (age 1 to attainment of age 3), we also consider muscle weakness affecting your ability to roll over, sit, crawl, or walk under 114.05A.

(ii) If you are of preschool age through adolescence (age 3 to attainment of age 18), weakness of your pelvic girdle muscles that results in your inability to rise independently from a squatting or sitting position or to climb stairs may be an indication that you are unable to ambulate effectively. Weakness of your shoulder girdle muscles may result in your inability to perform lifting, carrying, and reaching overhead, and also may seriously affect your ability to perform activities requiring fine movements. We evaluate these limitations under 114.05A.

5. *Undifferentiated and mixed connective tissue disease (114.06).*

a. *General.* This listing includes syndromes with clinical and immunologic features of several autoimmune disorders, but which do not satisfy the criteria for any of the specific disorders described. For example, you may have clinical features of SLE and systemic vasculitis, and the serologic (blood test) findings of rheumatoid arthritis. The most common pattern of undifferentiated autoimmune disorders in children is mixed connective tissue disease (MCTD).

b. *Documentation of undifferentiated and mixed connective tissue disease.* Undifferentiated connective tissue disease is diagnosed when clinical features and serologic (blood test) findings, such as rheumatoid factor or antinuclear antibody (consistent with an autoimmune disorder) are present but do not satisfy the criteria for a specific disease. Children with MCTD have laboratory findings of extremely high antibody titers to extractable nuclear antigen (ENA) or ribonucleoprotein (RNP) without high titers of anti-dsDNA or anti-SM antibodies. There are often clinical findings suggestive of SLE or childhood dermatomyositis. Many children later develop features of scleroderma.

6. *Inflammatory arthritis (114.09).*

a. *General.* The spectrum of inflammatory arthritis includes a vast array of disorders that differ in cause, course, and outcome. Clinically, inflammation of major peripheral joints may be the dominant manifestation causing difficulties with ambulation or fine

and gross movements; there may be joint pain, swelling, and tenderness. The arthritis may affect other joints, or cause less limitation in ambulation or the performance of fine and gross movements. However, in combination with extra-articular features, including constitutional symptoms or signs (severe fatigue, fever, malaise, involuntary weight loss), inflammatory arthritis may result in an extreme limitation. You may also have impaired growth as a result of the inflammatory arthritis because of its effects on the immature skeleton, open epiphyses, and young cartilage and bone. We evaluate any associated growth impairment under the criteria in 100.00.

b. *Inflammatory arthritis involving the axial spine (spondyloarthropathy).* In children, inflammatory arthritis involving the axial spine may be associated with disorders such as:

(i) Reactive arthropathies;

(ii) Juvenile ankylosing spondylitis;

(iii) Psoriatic arthritis;

(iv) SEA syndrome (seronegative enthesopathy arthropathy syndrome);

(v) Behçet's disease; and

(vi) Inflammatory bowel disease.

c. *Inflammatory arthritis involving the peripheral joints.* In children, inflammatory arthritis involving peripheral joints may be associated with disorders such as:

(i) Juvenile rheumatoid arthritis;

(ii) Sjöogren's syndrome;

(iii) Psoriatic arthritis;

(iv) Crystal deposition disorders (gout and pseudogout);

(v) Lyme disease; and

(vi) Inflammatory bowel disease.

d. *Documentation of inflammatory arthritis.* Generally, but not always, the diagnosis of inflammatory arthritis is based on the clinical features and serologic findings described in the most recent edition of the *Primer on the Rheumatic Diseases* published by the Arthritis Foundation.

e. *How we evaluate inflammatory arthritis under the listings.*

(i) Listing-level severity in 114.09A and 114.09C1 is shown by an impairment that results in an ''extreme'' (very serious) limitation. In 114.09A, the criterion is satisfied with persistent inflammation or deformity in one major peripheral weight-bearing joint resulting in the inability to ambulate effectively (as defined in 114.00C6) or one major peripheral joint in each upper extremity resulting in the inability to perform fine and gross movements effectively (as defined in 114.00C7). In 114.09C1, if you have the required ankylosis (fixation) of your cervical or dorsolumbar spine, we will find that you have an extreme limitation in your ability to see in front of you, above you, and to the side. Therefore, inability to ambulate effectively is implicit in 114.09C1, even though you might not require bilateral upper limb assistance.

(ii) Listing-level severity is shown in 114.09B, 114.09C2, and 114.09D by inflammatory arthritis that involves various combinations of complications of one or more major peripheral joints or involves other joints, such as inflammation or deformity, extra-articular features, repeated manifestations, and constitutional symptoms and signs. Extra-articular impairments may also meet listings in other body systems.

(iii) Extra-articular features of inflammatory arthritis may involve any body system; for example: Musculoskeletal (heel enthesopathy), ophthalmologic (iridocyclitis, keratoconjunctivitis sicca, uveitis), pulmonary (pleuritis, pulmonary fibrosis or nodules, restrictive lung disease), cardiovascular (aortic valve insufficiency, arrhythmias, coronary arteritis, myocarditis, pericarditis, Raynaud's phenomenon, systemic vasculitis), renal (amyloidosis of the kidney), hematologic (chronic anemia, thrombocytopenia), neurologic (peripheral neuropathy, radiculopathy, spinal cord or cauda equina compression with sensory and motor loss), mental (cognitive dysfunction, poor memory), and immune system (Felty's syndrome (hypersplenism with compromised immune competence)).

(iv) If both inflammation and chronic deformities are present, we evaluate your impairment under the criteria of any appropriate listing.

7. *Sjögren's syndrome (114.10).*

a. *General.*

(i) Sjögren's syndrome is an immune-mediated disorder of the exocrine glands. Involvement of the lacrimal and salivary glands is the hallmark feature, resulting in symptoms of dry eyes and dry mouth, and possible complications, such as corneal damage, blepharitis (eyelid inflammation), dysphagia (difficulty in swallowing), dental caries, and the inability to speak for extended periods of time. Involvement of the exocrine glands of the upper airways may result in persistent dry cough.

(ii) Many other organ systems may be involved, including musculoskeletal (arthritis, myositis), respiratory (interstitial fibrosis), gastrointestinal (dysmotility, dysphagia, involuntary weight loss), genitourinary (interstitial cystitis, renal tubular acidosis), skin (purpura, vasculitis,), neurologic (central nervous system disorders, cranial and peripheral neuropathies), mental (cognitive dysfunction, poor memory), and neoplastic (lymphoma). Severe fatigue and malaise are frequently reported. Sjögren's syndrome may be associated with other autoimmune disorders (for example, rheumatoid arthritis or SLE); usually the clinical features of the associated disorder predominate.

b. *Documentation of Sjögren's syndrome.* If you have Sjögren's syndrome, the medical

evidence will generally, but not always, show that your disease satisfies the criteria in the current ''Criteria for the Classification of Sjögren's Syndrome'' by the American College of Rheumatology found in the most recent edition of the *Primer on the Rheumatic Diseases* published by the Arthritis Foundation.

E. How do we document and evaluate immune deficiency disorders, excluding HIV infection?

1. *General.*

a. Immune deficiency disorders can be classified as:

(i) *Primary* (congenital); for example, X-linked agammaglobulinemia, thymic hypoplasia (DiGeorge syndrome), severe combined immunodeficiency (SCID), chronic granulomatous disease (CGD), C1 esterase inhibitor deficiency.

(ii) *Acquired;* for example, medication-related.

b. Primary immune deficiency disorders are seen mainly in children. However, recent advances in the treatment of these disorders have allowed many affected children to survive well into adulthood. Occasionally, these disorders are first diagnosed in adolescence or adulthood.

2. *Documentation of immune deficiency disorders.* The medical evidence must include documentation of the specific type of immune deficiency. Documentation may be by laboratory evidence or by other generally acceptable methods consistent with the prevailing state of medical knowledge and clinical practice.

3. *Immune deficiency disorders treated by stem cell transplantation.*

a. *Evaluation in the first 12 months.* If you undergo stem cell transplantation for your immune deficiency disorder, we will consider you disabled until at least 12 months from the date of the transplant.

b. *Evaluation after the 12-month period has elapsed.* After the 12-month period has elapsed, we will consider any residuals of your immune deficiency disorder as well as any residual impairment(s) resulting from the treatment, such as complications arising from:

(i) Graft-versus-host (GVH) disease.

(ii) Immunosuppressant therapy, such as frequent infections.

(iii) Significant deterioration of other organ systems.

4. *Medication-induced immune suppression.* Medication effects can result in varying degrees of immune suppression, but most resolve when the medication is ceased. However, if you are prescribed medication for long-term immune suppression, such as after an organ transplant, we will evaluate:

a. The frequency and severity of infections.

b. Residuals from the organ transplant itself, after the 12-month period has elapsed.

c. Significant deterioration of other organ systems.

F. *How do we document and evaluate human immunodeficiency virus (HIV) infection?* Any child with HIV infection, including one with a diagnosis of acquired immune deficiency syndrome (AIDS), may be found disabled under 114.08 if his or her impairment meets the criteria in that listing or is medically equivalent to the criteria in that listing.

1. *Documentation of HIV infection.* The medical evidence must include documentation of HIV infection. Documentation may be by laboratory evidence or by other generally acceptable methods consistent with the prevailing state of medical knowledge and clinical practice. When you have had laboratory testing for HIV infection, we will make every reasonable effort to obtain reports of the results of that testing. However, we will not purchase laboratory testing to establish whether you have HIV infection.

a. *Definitive documentation of HIV infection.* A definitive diagnosis of HIV infection is documented by one or more of the following laboratory tests:

(i) HIV antibody tests. HIV antibodies are usually first detected by an ELISA screening test performed on serum. Because the ELISA can yield false positive results, confirmation is required using a more definitive test, such as a Western blot or an immunofluorescence assay. Positive results on these tests are considered to be diagnostic of HIV infection in a child age 18 months or older. (See b. below for information about HIV antibody testing in children younger than 18 months of age.)

(ii) Positive ''viral load'' (VL) tests. These tests are normally used to quantitate the amount of the virus present but also document HIV infection. Such tests include the quantitative plasma HIV RNA, quantitative plasma HIV branched DNA, and reverse transcriptase-polymerase chain reaction (RT–PCR).

(iii) HIV DNA detection by polymerase chain reaction (PCR).

(iv) A specimen that contains HIV antigen (for example, serum specimen, lymphocyte culture, or cerebrospinal fluid) in a child age 1 month or older.

(v) A positive viral culture for HIV from peripheral blood mononuclear cells (PBMC).

(vi) An immunoglobulin A (IgA) serological assay that is specific for HIV.

(vii) Other tests that are highly specific for detection of HIV and that are consistent with the prevailing state of medical knowledge.

b. *Definitive documentation of HIV infection in children from birth to the attainment of 18 months.* For children from birth to the attainment of 18 months of age, and who have tested positive for HIV antibodies, HIV infection is documented by:

(i) One or more of the tests listed in F1a(ii)–F1a(vii).

(ii) For newborn and younger infants (birth to attainment of age 1), a CD4 (T4) count of 1500/mm^3 or less, or a CD4 count less than or equal to 20 percent of total lymphocytes.

(iii) For older infants and toddlers from 12 to 18 months of age, a CD4 (T4) count of 750/mm^3 or less, or a CD4 count less than or equal to 20 percent of total lymphocytes.

(iv) An abnormal CD4/CD8 ratio.

(v) A severely diminished immunoglobulin G (IgG) level (<4 g/l or 400 mg/dl), or significantly greater than normal range for age.

c. *Other acceptable documentation of HIV infection.* We may also document HIV infection without the definitive laboratory evidence described in 114.00F1a, provided that such documentation is consistent with the prevailing state of medical knowledge and clinical practice and is consistent with the other evidence in your case record. If no definitive laboratory evidence is available, we may document HIV infection by the medical history, clinical and laboratory findings, and diagnosis(es) indicated in the medical evidence. For example, we will accept a diagnosis of HIV infection without definitive laboratory evidence of the HIV infection if you have an opportunistic disease that is predictive of a defect in cell-mediated immunity (for example, *Pneumocystis* pneumonia (PCP)), and there is no other known cause of diminished resistance to that disease (for example, long-term steroid treatment, lymphoma). In such cases, we will make every reasonable effort to obtain full details of the history, medical findings, and results of testing.

2. *CD4 tests.* Children who have HIV infection or other disorders of the immune system may have tests showing a reduction of either the absolute count or the percentage of their T-helper lymphocytes (CD4 cells). The extent of immune suppression correlates with the level or rate of decline of the CD4 count (relative to the age of the young child). By age 6, children have CD4 counts comparable to those levels found in adults. Generally, in these children when the CD4 count is below 200/mm^3 (or below 14 percent of the total lymphocyte count) the susceptibility to opportunistic infection is greatly increased. Although a reduced CD4 count alone does not establish a definitive diagnosis of HIV infection, a CD4 count below 200 does offer supportive evidence when there are clinical findings, but not a definitive diagnosis of an opportunistic infection(s). However, a reduced CD4 count *alone* does not document the severity or functional consequences of HIV infection.

3. *Documentation of the manifestations of HIV infection.* The medical evidence must also include documentation of the manifestations of HIV infection. Documentation may be by laboratory evidence or other generally acceptable methods consistent with the prevailing state of medical knowledge and clinical practice.

a. *Definitive documentation of the manifestations of HIV infection.* The definitive method of diagnosing opportunistic diseases or conditions that are manifestations of HIV infection is by culture, serologic test, or microscopic examination of biopsied tissue or other material (for example, bronchial washings). We will make every reasonable effort to obtain specific laboratory evidence of an opportunistic disease or other condition whenever this information is available. If a histologic or other test has been performed, the evidence should include a copy of the appropriate report. If we cannot obtain the report, the summary of hospitalization or a report from the treating source should include details of the findings and results of the diagnostic studies (including appropriate medically acceptable imaging studies) or microscopic examination of the appropriate tissues or body fluids.

b. *Other acceptable documentation of the manifestations of HIV infection.* We may also document manifestations of HIV infection without the definitive laboratory evidence described in 114.00F3a, provided that such documentation is consistent with the prevailing state of medical knowledge and clinical practice and is consistent with the other evidence in your case record. For example, many conditions are now commonly diagnosed based on some or all of the following: Medical history, clinical manifestations, laboratory findings (including appropriate medically acceptable imaging), and treatment responses. In such cases, we will make every reasonable effort to obtain full details of the history, medical findings, and results of testing. The following are examples of how we may document manifestations of HIV infection with other appropriate evidence.

(i) Although a definitive diagnosis of PCP requires identifying the organism in bronchial washings, induced sputum, or lung biopsy, these tests are frequently bypassed if PCP can be diagnosed presumptively. Supportive evidence may include: Fever, dyspnea, hypoxia, CD4 count below 200 in children 6 years of age or older, and no evidence of bacterial pneumonia. Also supportive are bilateral lung interstitial infiltrates on x-ray, a typical pattern on CAT scan, or a gallium scan positive for pulmonary uptake. Response to anti-PCP therapy usually requires 5–7 days, and such a response can be supportive of the diagnosis.

(ii) Documentation of *Cytomegalovirus* (CMV) disease (114.08D) may present special problems because definitive diagnosis (except for chorioretinitis, which may be diagnosed by an ophthalmologist or optometrist on funduscopic examination) requires identification of viral inclusion bodies or a positive culture from the affected organ and the

absence of any other infectious agent likely to be causing the disease. A positive serology test does not establish a definitive diagnosis of CMV disease, but does offer supportive evidence of a presumptive diagnosis of CMV disease. Other clinical findings that support a presumptive diagnosis of CMV may include: Fever, urinary culture positive for CMV, and CD4 count below 200 in children 6 years of age or older. A clear response to anti-CMV therapy also supports a diagnosis.

(iii) A definitive diagnosis of toxoplasmosis of the brain is based on brain biopsy, but this procedure carries significant risk and is not commonly performed. This condition is usually diagnosed presumptively based on symptoms or signs of fever, headache, focal neurologic deficits, seizures, typical lesions on brain imaging, and a positive serology test.

(iv) Candidiasis of the esophagus (also known as *Candida* esophagitis) may be presumptively diagnosed based on symptoms of retrosternal pain on swallowing (odynophagia) and either oropharyngeal thrush (white patches or plaques) diagnosed on physical examination or by microscopic documentation of *Candida* fungal elements from a noncultured specimen scraped from the oral mucosa. Treatment with oral (systemic) antifungal agents usually produces improvement after 5 or more days of therapy, and such a response can be supportive of the diagnosis.

4. *HIV infection manifestations specific to children.*

a. *General.* The clinical manifestation and course of disease in children who become infected with HIV perinatally or in the first 12 years of life may differ from that in adolescents (age 12 to attainment of age 18) and adults. Newborn and younger infants (birth to attainment of age 1) and older infants and toddlers (age 1 to attainment of age 3) may present with failure to thrive or PCP; preschool children (age 3 to attainment of age 6) and primary school children (age 6 to attainment of age 12) may present with recurrent infections, neurological problems, or developmental abnormalities. Adolescents may also exhibit neurological abnormalities, such as HIV encephalopathy, or have growth problems. HIV infection that affects the digestive system and results in malnutrition also may be evaluated under 105.08.

b. *Neurologic abnormalities.* The methods of identifying and evaluating neurologic abnormalities may vary depending on a child's age. For example, in an infant, impaired brain growth can be documented by a decrease in the growth rate of the head. In an older child, impaired brain growth may be documented by brain atrophy on a CAT scan or MRI. Neurologic abnormalities in infants and young children may present as serious developmental delays or in the loss of previously acquired developmental milestones. In school-age children and adolescents, this type of neurologic abnormality generally presents as the loss of previously acquired intellectual abilities. This may be evidenced in a child by a decrease in intelligence quotient (IQ) scores, by forgetting information previously learned, by inability to learn new information, or by a sudden onset of a new learning disability.

c. *Bacterial infections.* Children with HIV infection may contract any of a broad range of bacterial infections. Certain major infections caused by pyogenic bacteria (for example, some pneumonias) can be severely limiting, especially in pre-adolescent children. We evaluate these major bacterial infections under 114.08A4. Although 114.08A4 applies only to children under 13 years of age, children age 13 and older may have an impairment that medically equals this listing if the circumstances of the case warrant; for example, if there is delayed puberty. We will evaluate pelvic inflammatory disease in older girls under 114.08A5.

G. How do we consider the effects of treatment in evaluating your autoimmune disorder, immune deficiency disorder, or HIV infection?

1. *General.* If your impairment does not otherwise meet the requirements of a listing, we will consider your medical treatment in terms of its effectiveness in improving the signs, symptoms, and laboratory abnormalities of your specific immune system disorder or its manifestations, and in terms of any side effects that limit your functioning. We will make every reasonable effort to obtain a specific description of the treatment you receive (including surgery) for your immune system disorder. We consider:

a. The effects of medications you take.

b. Adverse side effects (acute and chronic).

c. The intrusiveness and complexity of your treatment (for example, the dosing schedule, need for injections).

d. The effect of treatment on your mental functioning (for example, cognitive changes, mood disturbance).

e. Variability of your response to treatment (see 114.00G2).

f. The interactive and cumulative effects of your treatments. For example, many children with immune system disorders receive treatment both for their immune system disorders and for the manifestations of the disorders or co-occurring impairments, such as treatment for HIV infection and hepatitis C. The interactive and cumulative effects of these treatments may be greater than the effects of each treatment considered separately.

g. The duration of your treatment.

h. Any other aspects of treatment that may interfere with your ability to function.

2. *Variability of your response to treatment.* Your response to treatment and the adverse or beneficial consequences of your treatment

may vary widely. The effects of your treatment may be temporary or long term. For example, some children may show an initial positive response to a drug or combination of drugs followed by a decrease in effectiveness. When we evaluate your response to treatment and how your treatment may affect you, we consider such factors as disease activity before treatment, requirements for changes in therapeutic regimens, the time required for therapeutic effectiveness of a particular drug or drugs, the limited number of drug combinations that may be available for your impairment(s), and the time-limited efficacy of some drugs. For example, a child with HIV infection or another immune deficiency disorder who develops otitis media may not respond to the same antibiotic regimen used in treating children without HIV infection or another immune deficiency disorder, or may not respond to an antibiotic that he or she responded to before. Therefore, we must consider the effects of your treatment on an individual basis, including the effects of your treatment on your ability to function.

3. *How we evaluate the effects of treatment for autoimmune disorders on your ability to function.* Some medications may have acute or long-term side effects. When we consider the effects of corticosteroids or other treatments for autoimmune disorders on your ability to function, we consider the factors in 114.00G1 and 114.00G2. Long-term corticosteroid treatment can cause ischemic necrosis of bone, posterior subcapsular cataract, impaired growth, weight gain, glucose intolerance, increased susceptibility to infection, and osteopenia that may result in a loss of function. In addition, medications used in the treatment of autoimmune disorders may also have effects on mental functioning, including cognition (for example, memory), concentration, and mood.

4. *How we evaluate the effects of treatment for immune deficiency disorders, excluding HIV infection, on your ability to function.* When we consider the effects of your treatment for your immune deficiency disorder on your ability to function, we consider the factors in 114.00G1 and 114.00G2. A frequent need for treatment such as intravenous immunoglobulin and gamma interferon therapy can be intrusive and interfere with your ability to function. We will also consider whether you have chronic side effects from these or other medications, including severe fatigue, fever, headaches, high blood pressure, joint swelling, muscle aches, nausea, shortness of breath, or limitations in mental function including cognition (for example, memory) concentration, and mood.

5. *How we evaluate the effects of treatment for HIV infection on your ability to function.*

a. *General.* When we consider the effects of antiretroviral drugs (including the effects of highly active antiretroviral therapy (HAART)) and the effects of treatments for the manifestations of HIV infection on your ability to function, we consider the factors in 114.00G1 and 114.00G2. Side effects of antiretroviral drugs include, but are not limited to: Bone marrow suppression, pancreatitis, gastrointestinal intolerance (nausea, vomiting, diarrhea), neuropathy, rash, hepatotoxicity, lipodystrophy (fat redistribution, such as ''buffalo hump''), glucose intolerance, and lactic acidosis. In addition, medications used in the treatment of HIV infection may also have effects on mental functioning, including cognition (for example, memory), concentration, and mood, and may result in malaise, severe fatigue, joint and muscle pain, and insomnia. The symptoms of HIV infection and the side effects of medication may be indistinguishable from each other. We will consider all of your functional limitations, whether they result from your symptoms or signs of HIV infection or the side effects of your treatment.

b. *Structured treatment interruptions.* A structured treatment interruption (STI, also called a ''drug holiday'') is a treatment practice during which your treating source advises you to stop taking your medications temporarily. An STI in itself does not imply that your medical condition has improved; nor does it imply that you are noncompliant with your treatment because you are following your treating source's advice. Therefore, if you have stopped taking medication because your treating source prescribed or recommended an STI, we will not find that you are failing to follow treatment or draw inferences about the severity of your impairment on this fact alone. We will consider why your treating source has prescribed or recommended an STI and all the other information in your case record when we determine the severity of your impairment.

6. *When there is no record of ongoing treatment.* If you have not received ongoing treatment or have not had an ongoing relationship with the medical community despite the existence of a severe impairment(s), we will evaluate the medical severity and duration of your immune system disorder on the basis of the current objective medical evidence and other evidence in your case record, taking into consideration your medical history, symptoms, clinical and laboratory findings, and medical source opinions. If you have just begun treatment and we cannot determine whether you are disabled based on the evidence we have, we may need to wait to determine the effect of the treatment on your ability to develop and function in an age-appropriate manner. The amount of time we need to wait will depend on the facts of your case. If you have not received treatment, you may not be able to show an impairment that meets the criteria of one of the immune system disorders listings, but your immune system disorder may medically

equal a listing or functionally equal the listings.

H. How do we consider your symptoms, including your pain, severe fatigue, and malaise?

Your symptoms, including pain, severe fatigue, and malaise, may be important factors in our determination whether your immune system disorder(s) meets or medically equals a listing or in our determination whether you otherwise have marked and severe functional limitations. In order for us to consider your symptoms, you must have medical signs or laboratory findings showing the existence of a medically determinable impairment(s) that could reasonably be expected to produce the symptoms. If you have such an impairment(s), we will evaluate the intensity, persistence, and functional effects of your symptoms using the rules throughout 114.00 and in our other regulations. See §§416.928, and 416.929. Additionally, when we assess the credibility of your complaints about your symptoms and their functional effects, we will not draw any inferences from the fact that you do not receive treatment or that you are not following treatment without considering all of the relevant evidence in your case record, including any explanations you provide that may explain why you are not receiving or following treatment.

I. How do we use the functional criteria in these listings?

1. The following listings in this body system include standards for evaluating the functional limitations resulting from immune system disorders: 114.02B, for systemic lupus erythematosus; 114.03B, for systemic vasculitis; 114.04D, for systemic sclerosis (scleroderma); 114.05E, for polymyositis and dermatomyositis; 114.06B, for undifferentiated and mixed connective tissue disease; 114.07C, for immune deficiency disorders, excluding HIV infection; 114.08L, for HIV infection; 114.09D, for inflammatory arthritis; and 114.10B, for Sjögren's syndrome.

2. When we use one of the listings cited in 114.00I1, we will consider all relevant information in your case record to determine the full impact of your immune system disorder on your ability to function. Important factors we will consider when we evaluate your functioning under these listings include, but are not limited to: Your symptoms, the frequency and duration of manifestations of your immune system disorder, periods of exacerbation and remission, and the functional impact of your treatment, including the side effects of your medication.

3. To satisfy the functional criterion in a listing, your immune system disorder must result in an ''extreme'' limitation in one domain of functioning or a ''marked'' limitation in two domains of functioning depending on your age. (See 112.00C for additional discussion of these areas of functioning and §§416.924a and 416.926a for additional guidance on the evaluation of functioning in children.) Functional limitation may result from the impact of the disease process itself on your mental functioning, physical functioning, or both your mental and physical functioning. This could result from persistent or intermittent symptoms, such as depression, severe fatigue, or pain, resulting in a limitation of your ability to do a task, to concentrate, to persevere at a task, or to perform the task at an acceptable rate of speed. You may also have limitations because of your treatment and its side effects (see 114.00G).

J. How do we evaluate your immune system disorder when it does not meet one of these listings?

1. These listings are only examples of immune system disorders that we consider severe enough to result in marked and severe functional limitations. If your impairment(s) does not meet the criteria of any of these listings, we must also consider whether you have an impairment(s) that satisfies the criteria of a listing in another body system.

2. Individuals with immune system disorders, including HIV infection, may manifest signs or symptoms of a mental impairment or of another physical impairment. We may evaluate these impairments under any affected body system. For example, we will evaluate:

a. Growth impairment under 100.00.

b. Musculoskeletal involvement, such as surgical reconstruction of a joint, under 101.00.

c. Ocular involvement, such as dry eye, under 102.00.

d. Respiratory impairments, such as pleuritis, under 103.00.

e. Cardiovascular impairments, such as cardiomyopathy, under 104.00.

f. Digestive impairments, such as hepatitis (including hepatitis C) or weight loss as a result of HIV infection that affects the digestive system, under 105.00.

g. Genitourinary impairments, such as nephropathy, under 106.00.

h. Hematologic abnormalities, such as anemia, granulocytopenia, and thrombocytopenia, under 107.00.

i. Skin impairments, such as persistent fungal and other infectious skin eruptions, and photosensitivity, under 108.00.

j. Neurologic impairments, such as neuropathy or seizures, under 111.00.

k. Mental disorders, such as depression, anxiety, or cognitive deficits, under 112.00.

l. Allergic disorders, such as asthma or atopic dermatitis, under 103.00 or 108.00 or under the criteria in another affected body system.

m. Syphilis or neurosyphilis under the criteria for the affected body system, for example, 102.00 Special senses and speech, 104.00 Cardiovascular system, or 111.00 Neurological.

3. If you have a severe medically determinable impairment(s) that does not meet a listing, we will determine whether your impairment(s) medically equals a listing. (See §416.926.) If it does not, we will also consider whether you have an impairment(s) that functionally equals the listings. (See §416.926a.) We use the rules in §416.994a when we decide whether you continue to be disabled.

114.01 *Category of Impairments, Immune System Disorders.*

114.02 *Systemic lupus erythematosus.* As described in 114.00D1. With:

A. Involvement of two or more organs/body systems, with:

1. One of the organs/body systems involved to at least a moderate level of severity; and

2. At least two of the constitutional symptoms or signs (severe fatigue, fever, malaise, or involuntary weight loss).

or

B. Any other manifestation(s) of SLE resulting in one of the following:

1. For children from birth to attainment of age 1, at least one of the criteria in paragraphs A–E of 112.12; or

2. For children age 1 to attainment of age 3, at least one of the appropriate age-group criteria in paragraph B1 of 112.02; or

3. For children age 3 to attainment of age 18, at least two of the appropriate age-group criteria in paragraph B2 of 112.02.

114.03 *Systemic vasculitis.* As described in 114.00D2. With:

A. Involvement of two or more organs/body systems, with:

1. One of the organs/body systems involved to at least a moderate level of severity; and

2. At least two of the constitutional symptoms or signs (severe fatigue, fever, malaise, or involuntary weight loss).

or

B. Any other manifestation(s) of systemic vasculitis resulting in one of the following:

1. For children from birth to attainment of age 1, at least one of the criteria in paragraphs A–E of 112.12; or

2. For children age 1 to attainment of age 3, at least one of the appropriate age-group criteria in paragraph B1 of 112.02; or

3. For children age 3 to attainment of age 18, at least two of the appropriate age-group criteria in paragraph B2 of 112.02.

114.04 *Systemic sclerosis (scleroderma).* As described in 114.00D3. With:

A. Involvement of two or more organs/body systems, with:

1. One of the organs/body systems involved to at least a moderate level of severity; and

2. At least two of the constitutional symptoms or signs (severe fatigue, fever, malaise, or involuntary weight loss).

or

B. With one of the following:

1. Toe contractures or fixed deformity of one or both feet, resulting in the inability to ambulate effectively as defined in 114.00C6; or

2. Finger contractures or fixed deformity in both hands, resulting in the inability to perform fine and gross movements effectively as defined in 114.00C7; or

3. Atrophy with irreversible damage in one or both lower extremities, resulting in the inability to ambulate effectively as defined in 114.00C6; or

4. Atrophy with irreversible damage in both upper extremities, resulting in the inability to perform fine and gross movements effectively as defined in 114.00C7.

or

C. Raynaud's phenomenon, characterized by:

1. Gangrene involving at least two extremities; or

2. Ischemia with ulcerations of toes or fingers, resulting in the inability to ambulate effectively or to perform fine and gross movements effectively as defined in 114.00C6 and 114.00C7;

or

D. Any other manifestation(s) of systemic sclerosis (scleroderma) resulting in one of the following:

1. For children from birth to attainment of age 1, at least one of the criteria in paragraphs A–E of 112.12; or

2. For children age 1 to attainment of age 3, at least one of the appropriate age-group criteria in paragraph B1 of 112.02; or

3. For children age 3 to attainment of age 18, at least two of the appropriate age-group criteria in paragraph B2 of 112.02.

114.05 *Polymyositis and dermatomyositis.* As described in 114.00D4. With:

A. Proximal limb-girdle (pelvic or shoulder) muscle weakness, resulting in inability to ambulate effectively or inability to perform fine and gross movements effectively as defined in 114.00C6 and 114.00C7.

or

B. Impaired swallowing (dysphagia) with aspiration due to muscle weakness.

or

C. Impaired respiration due to intercostal and diaphragmatic muscle weakness.

or

D. Diffuse calcinosis with limitation of joint mobility or intestinal motility.

or

E. Any other manifestation(s) of polymyositis or dermatomyositis resulting in one of the following:

1. For children from birth to attainment of age 1, at least one of the criteria in paragraphs A–E of 112.12;
or

2. For children age 1 to attainment of age 3, at least one of the appropriate age-group criteria in paragraph B1 of 112.02; or

3. For children age 3 to attainment of age 18, at least two of the appropriate age-group criteria in paragraph B2 of 112.02.

114.06 *Undifferentiated and mixed connective tissue disease.* As described in 114.00D5. With:

A. Involvement of two or more organs/body systems, with:

1. One of the organs/body systems involved to at least a moderate level of severity; and

2. At least two of the constitutional symptoms or signs (severe fatigue, fever, malaise, or involuntary weight loss).
or

B. Any other manifestation(s) of undifferentiated or mixed connective tissue disease resulting in one of the following:

1. For children from birth to attainment of age 1, at least one of the criteria in paragraphs A–E of 112.12; or

2. For children age 1 to attainment of age 3, at least one of the appropriate age-group criteria in paragraph B1 of 112.02; or

3. For children age 3 to attainment of age 18, at least two of the appropriate age-group criteria in paragraph B2 of 112.02.

114.07 *Immune deficiency disorders, excluding HIV infection.* As described in 114.00E. With:

A. One or more of the following infections. The infection(s) must either be resistant to treatment or require hospitalization or intravenous treatment three or more times in a 12-month period.

1. Sepsis; or

2. Meningitis; or

3. Pneumonia; or

4. Septic arthritis; or

5. Endocarditis; or

6. Sinusitis documented by appropriate medically acceptable imaging.

or

B. Stem cell transplantation as described under 114.00E3. Consider under a disability until at least 12 months from the date of transplantation. Thereafter, evaluate any residual impairment(s) under the criteria for the affected body system.
or

C. Any other manifestation(s) of an immune deficiency disorder resulting in one of the following:

1. For children from birth to attainment of age 1, at least one of the criteria in paragraphs A–E of 112.12; or

2. For children age 1 to attainment of age 3, at least one of the appropriate age-group criteria in paragraph B1 of 112.02; or

3. For children age 3 to attainment of age 18, at least two of the appropriate age-group criteria in paragraph B2 of 112.02.

114.08 *Human immunodeficiency virus (HIV) infection.* With documentation as described in 114.00F and one of the following:

A. Bacterial infections:

1. Mycobacterial infection (for example, caused by *M. avium-intracellulare*, *M. kansasii*, or *M. tuberculosis*) at a site other than the lungs, skin, or cervical or hilar lymph nodes, or pulmonary tuberculosis resistant to treatment; or

2. Nocardiosis; or

3. *Salmonella* bacteremia, recurrent non-typhoid; or

4. In a child less than 13 years of age, multiple or recurrent pyogenic bacterial infections (sepsis, pneumonia, meningitis, bone or joint infection, or abscess of an internal organ or body cavity, but not otitis media or superficial skin or mucosal abscesses) occurring two or more times in 2 years (for children age 13 and older, see 114.00F4c); or

5. Multiple or recurrent bacterial infections, including pelvic inflammatory disease, requiring hospitalization or intravenous antibiotic treatment three or more times in a 12-month period.

or

B. Fungal infections:

1. Aspergillosis; or

2. Candidiasis involving the esophagus, trachea, bronchi, or lungs, or at a site other than the skin, urinary tract, intestinal tract, or oral or vulvovaginal mucous membranes; or

3. Coccidioidomycosis, at a site other than the lungs or lymph nodes; or

4. Cryptococcosis, at a site other than the lungs (for example, cryptococcal meningitis); or

5. Histoplasmosis, at a site other than the lungs or lymph nodes; or

6. Mucormycosis; or

7. *Pneumocystis* pneumonia or extrapulmonary *Pneumocystis* infection.
or

C. Protozoan or helminthic infections:

1. Cryptosporidiosis, isosporiasis, or microsporidiosis, with diarrhea lasting for 1 month or longer; or

2. Strongyloidiasis, extra-intestinal; or

3. Toxoplasmosis of an organ other than the liver, spleen, or lymph nodes.

or

D. Viral infections:

1. *Cytomegalovirus* disease (documented as described in 114.00F3b(ii)) at a site other than the liver, spleen, or lymph nodes; or

2. Herpes simplex virus causing:

a. Mucocutaneous infection (for example, oral, genital, perianal) lasting for 1 month or longer; or

b. Infection at a site other than the skin or mucous membranes (for example, bronchitis, pneumonitis, esophagitis, or encephalitis); or

c. Disseminated infection; or

3. Herpes zoster:

a. Disseminated; or

b. With multidermatomal eruptions that are resistant to treatment; or

4. Progressive multifocal leukoencephalopathy.

or

E. Malignant neoplasms:

1. Carcinoma of the cervix, invasive, FIGO stage II and beyond; or

2. Kaposi's sarcoma with:

a. Extensive oral lesions; or

b. Involvement of the gastrointestinal tract, lungs, or other visceral organs; or

3. Lymphoma (for example, primary lymphoma of the brain, Burkitt's lymphoma, immunoblastic sarcoma, other non-Hodgkin's lymphoma, Hodgkin's disease); or

4. Squamous cell carcinoma of the anal canal or anal margin.

or

F. Conditions of the skin or mucous membranes (other than described in B2, D2, or D3, above), with extensive fungating or ulcerating lesions not responding to treatment (for example, dermatological conditions such as eczema or psoriasis, vulvovaginal or other mucosal *Candida,* condyloma caused by human *Papillomavirus,* genital ulcerative disease).

or

G. Neurological manifestations of HIV infection (for example, HIV encephalopathy, peripheral neuropathy) resulting in one of the following:

1. Loss of previously acquired, or marked delay in achieving, developmental milestones or intellectual ability (including the sudden onset of a new learning disability);

or

2. Impaired brain growth (acquired microcephaly or brain atrophy—see 114.00F4b); or

3. Progressive motor dysfunction affecting gait and station or fine and gross motor skills.

or

H. Growth disturbance, with:

1. An involuntary weight loss (or failure to gain weight at an appropriate rate for age) resulting in a fall of 15 percentiles from an established growth curve (on standard growth charts) that persists for 2 months or longer; or

2. An involuntary weight loss (or failure to gain weight at an appropriate rate for age) resulting in a fall to below the third percentile from an established growth curve (on standard growth charts) that persists for 2 months or longer; or

3. Involuntary weight loss of 10 percent or more of baseline (computed based on pounds, kilograms, or body mass index (BMI)) that persists for 2 months or longer.

or

I. Diarrhea, lasting for 1 month or longer, resistant to treatment and requiring intravenous hydration, intravenous alimentation, or tube feeding.

or

J. Lymphoid interstitial pneumonia/pulmonary lymphoid hyperplasia (LIP/PLH complex), with respiratory symptoms that significantly interfere with age-appropriate activities, and that cannot be controlled by prescribed treatment.

or

K. One or more of the following infections (other than described in A–J, above). The infection(s) must either be resistant to treatment or require hospitalization or intravenous treatment three or more times in a 12-month period.

1. Sepsis; or

2. Meningitis; or

3. Pneumonia; or

4. Septic arthritis; or

5. Endocarditis; or

6. Sinusitis documented by appropriate medically acceptable imaging.

or

L. Any other manifestation(s) of HIV infection, including those listed in 114.08A–K, but without the requisite findings for those listings (for example, oral candidiasis not meeting the criteria in 114.08F, diarrhea not meeting the criteria in 114.08I), or other manifestation(s) (for example, oral hairy leukoplakia, hepatomegaly), resulting in one of the following:

1. For children from birth to attainment of age 1, at least one of the criteria in paragraphs A–E of 112.12; or

2. For children age 1 to attainment of age 3, at least one of the appropriate age-group criteria in paragraph B1 of 112.02; or

3. For children age 3 to attainment of age 18, at least two of the appropriate age-group criteria in paragraph B2 of 112.02.

114.09 *Inflammatory arthritis.* As described in 114.00D6. With:

A. Persistent inflammation or persistent deformity of:

1. One or more major peripheral weight-bearing joints resulting in the inability to ambulate effectively (as defined in 114.00C6); or

2. One or more major peripheral joints in each upper extremity resulting in the inability to perform fine and gross movements effectively (as defined in 114.00C7).

or

B. Inflammation or deformity in one or more major peripheral joints with:

1. Involvement of two or more organs/body systems with one of the organs/body systems involved to at least a moderate level of severity; and

2. At least two of the constitutional symptoms or signs (severe fatigue, fever, malaise, or involuntary weight loss).

or

C. Ankylosing spondylitis or other spondyloarthropathies, with:

1. Ankylosis (fixation) of the dorsolumbar or cervical spine as shown by appropriate medically acceptable imaging and measured on physical examination at 45° or more of flexion from the vertical position (zero degrees); or

2. Ankylosis (fixation) of the dorsolumbar or cervical spine as shown by appropriate medically acceptable imaging and measured on physical examination at 30° or more of flexion (but less than 45°) measured from the vertical position (zero degrees), and involvement of two or more organs/body systems with one of the organs/body systems involved to at least a moderate level of severity.

or

D. Any other manifestation(s) of inflammatory arthritis resulting in one of the following:

1. For children from birth to attainment of age 1, at least one of the criteria in paragraphs A–E of 112.12; or

2. For children age 1 to attainment of age 3, at least one of the appropriate age-group criteria in paragraph B1 of 112.02; or

3. For children age 3 to attainment of age 18, at least two of the appropriate age-group criteria in paragraph B2 of 112.02.

114.10 *Sjögren's syndrome.* As described in 114.00D7. With:

A. Involvement of two or more organs/body systems, with:

1. One of the organs/body systems involved to at least a moderate level of severity; and

2. At least two of the constitutional symptoms or signs (severe fatigue, fever, malaise, or involuntary weight loss).

OR

B. Any other manifestation(s) of Sjögren's syndrome resulting in one of the following:

1. For children from birth to attainment of age 1, at least one of the criteria in paragraphs A–E of 112.12; or

2. For children age 1 to attainment of age 3, at least one of the appropriate age-group criteria in paragraph B1 of 112.02; or

3. For children age 3 to attainment of age 18, at least two of the appropriate age-group criteria in paragraph B2 of 112.02.

[50 FR 35066, Aug. 28, 1985]

EDITORIAL NOTE: For FEDERAL REGISTER citations affecting appendix 1 to subpart P of part 404, see the List of CFR Sections Affected, which appears in the Finding Aids section of the printed volume and at *www.fdsys.gov*.

APPENDIX 2 TO SUBPART P OF PART 404—MEDICAL-VOCATIONAL GUIDELINES

Sec.

200.00 Introduction.
201.00 Maximum sustained work capability limited to sedentary work as a result of severe medically determinable impairment(s).
202.00 Maximum sustained work capability limited to light work as a result of severe medically determinable impairment(s).
203.00 Maximum sustained work capability limited to medium work as a result of severe medically determinable impairment(s).
204.00 Maximum sustained work capability limited to heavy work (or very heavy work) as a result of severe medically determinable impairment(s).

200.00 *Introduction.* (a) The following rules reflect the major functional and vocational patterns which are encountered in cases which cannot be evaluated on medical considerations alone, where an individual with a severe medically determinable physical or mental impairment(s) is not engaging in substantial gainful activity and the individual's impairment(s) prevents the performance of his or her vocationally relevant past work. They also reflect the analysis of the various vocational factors (*i.e.*, age, education, and work experience) in combination with the individual's residual functional capacity (used to determine his or her maximum sustained work capability for sedentary, light, medium, heavy, or very heavy work) in evaluating the individual's ability to engage in substantial gainful activity in other than his or her vocationally relevant past work. Where the findings of fact made with respect to a particular individual's vocational factors and residual functional capacity coincide with all of the criteria of a particular rule, the rule directs a conclusion as to whether the individual is or is not disabled. However, each of these findings of fact is subject to rebuttal and the individual may present evidence to refute such findings. Where any one of the findings of fact does not coincide with the corresponding criterion of a rule, the rule does not apply in that particular case and, accordingly, does not direct a conclusion of disabled or not disabled. In any instance where a rule does not apply, full consideration must be given to all of the relevant facts of the case in accordance with the definitions and discussions of each factor in the appropriate sections of the regulations.

(b) The existence of jobs in the national economy is reflected in the ''Decisions''

shown in the rules; *i.e.*, in promulgating the rules, administrative notice has been taken of the numbers of unskilled jobs that exist throughout the national economy at the various functional levels (sedentary, light, medium, heavy, and very heavy) as supported by the ''Dictionary of Occupational Titles'' and the ''Occupational Outlook Handbook,'' published by the Department of Labor; the ''County Business Patterns'' and ''Census Surveys'' published by the Bureau of the Census; and occupational surveys of light and sedentary jobs prepared for the Social Security Administration by various State employment agencies. Thus, when all factors coincide with the criteria of a rule, the existence of such jobs is established. However, the existence of such jobs for individuals whose remaining functional capacity or other factors do not coincide with the criteria of a rule must be further considered in terms of what kinds of jobs or types of work may be either additionally indicated or precluded.

(c) In the application of the rules, the individual's residual functional capacity (*i.e.*, the maximum degree to which the individual retains the capacity for sustained performance of the physical-mental requirements of jobs), age, education, and work experience must first be determined. When assessing the person's residual functional capacity, we consider his or her symptoms (such as pain), signs, and laboratory findings together with other evidence we obtain.

(d) The correct disability decision (*i.e.*, on the issue of ability to engage in substantial gainful activity) is found by then locating the individual's specific vocational profile. If an individual's specific profile is not listed within this appendix 2, a conclusion of disabled or not disabled is not directed. Thus, for example, an individual's ability to engage in substantial gainful work where his or her residual functional capacity falls between the ranges of work indicated in the rules (e.g., the individual who can perform more than light but less than medium work), is decided on the basis of the principles and definitions in the regulations, giving consideration to the rules for specific case situations in this appendix 2. These rules represent various combinations of exertional capabilities, age, education and work experience and also provide an overall structure for evaluation of those cases in which the judgments as to each factor do not coincide with those of any specific rule. Thus, when the necessary judgments have been made as to each factor and it is found that no specific rule applies, the rules still provide guidance for decisionmaking, such as in cases involving combinations of impairments. For example, if strength limitations resulting from an individual's impairment(s) considered with the judgments made as to the individual's age, education and work experience correspond to (or closely approximate) the factors of a particular rule, the adjudicator then has a frame of reference for considering the jobs or types of work precluded by other, nonexertional impairments in terms of numbers of jobs remaining for a particular individual.

(e) Since the rules are predicated on an individual's having an impairment which manifests itself by limitations in meeting the strength requirements of jobs, they may not be fully applicable where the nature of an individual's impairment does not result in such limitations, e.g., certain mental, sensory, or skin impairments. In addition, some impairments may result solely in postural and manipulative limitations or environmental restrictions. Environmental restrictions are those restrictions which result in inability to tolerate some physical feature(s) of work settings that occur in certain industries or types of work, e.g., an inability to tolerate dust or fumes.

(1) In the evaluation of disability where the individual has solely a nonexertional type of impairment, determination as to whether disability exists shall be based on the principles in the appropriate sections of the regulations, giving consideration to the rules for specific case situations in this appendix 2. The rules do not direct factual conclusions of disabled or not disabled for individuals with solely nonexertional types of impairments.

(2) However, where an individual has an impairment or combination of impairments resulting in both strength limitations and nonexertional limitations, the rules in this subpart are considered in determining first whether a finding of disabled may be possible based on the strength limitations alone and, if not, the rule(s) reflecting the individual's maximum residual strength capabilities, age, education, and work experience provide a framework for consideration of how much the individual's work capability is further diminished in terms of any types of jobs that would be contraindicated by the nonexertional limitations. Also, in these combinations of nonexertional and exertional limitations which cannot be wholly determined under the rules in this appendix 2, full consideration must be given to all of the relevant facts in the case in accordance with the definitions and discussions of each factor in the appropriate sections of the regulations, which will provide insight into the adjudicative weight to be accorded each factor.

201.00 *Maximum sustained work capability limited to sedentary work as a result of severe medically determinable impairment(s).* (a) Most sedentary occupations fall within the skilled, semi-skilled, professional, administrative, technical, clerical, and benchwork classifications. Approximately 200 separate unskilled sedentary occupations can be identified, each representing numerous jobs in

the national economy. Approximately 85 percent of these jobs are in the machine trades and benchwork occupational categories. These jobs (unskilled sedentary occupations) may be performed after a short demonstration or within 30 days.

(b) These unskilled sedentary occupations are standard within the industries in which they exist. While sedentary work represents a significantly restricted range of work, this range in itself is not so prohibitively restricted as to negate work capability for substantial gainful activity.

(c) Vocational adjustment to sedentary work may be expected where the individual has special skills or experience relevant to sedentary work or where age and basic educational competences provide sufficient occupational mobility to adapt to the major segment of unskilled sedentary work. Inability to engage in substantial gainful activity would be indicated where an individual who is restricted to sedentary work because of a severe medically determinable impairment lacks special skills or experience relevant to sedentary work, lacks educational qualifications relevant to most sedentary work (e.g., has a limited education or less) and the individual's age, though not necessarily advanced, is a factor which significantly limits vocational adaptability.

(d) The adversity of functional restrictions to sedentary work at advanced age (55 and over) for individuals with no relevant past work or who can no longer perform vocationally relevant past work and have no transferable skills, warrants a finding of disabled in the absence of the rare situation where the individual has recently completed education which provides a basis for direct entry into skilled sedentary work. Advanced age and a history of unskilled work or no work experience would ordinarily offset any vocational advantages that might accrue by reason of any remote past education, whether it is more or less than limited education.

(e) The presence of acquired skills that are readily transferable to a significant range of skilled work within an individual's residual functional capacity would ordinarily warrant a finding of ability to engage in substantial gainful activity regardless of the adversity of age, or whether the individual's formal education is commensurate with his or her demonstrated skill level. The acquisition of work skills demonstrates the ability to perform work at the level of complexity demonstrated by the skill level attained regardless of the individual's formal educational attainments.

(f) In order to find transferability of skills to skilled sedentary work for individuals who are of advanced age (55 and over), there must be very little, if any, vocational adjustment required in terms of tools, work processes, work settings, or the industry.

(g) Individuals approaching advanced age (age 50–54) may be significantly limited in vocational adaptability if they are restricted to sedentary work. When such individuals have no past work experience or can no longer perform vocationally relevant past work and have no transferable skills, a finding of disabled ordinarily obtains. However, recently completed education which provides for direct entry into sedentary work will preclude such a finding. For this age group, even a high school education or more (ordinarily completed in the remote past) would have little impact for effecting a vocational adjustment unless relevant work experience reflects use of such education.

(h)(1) The term *younger individual* is used to denote an individual age 18 through 49. For individuals who are age 45–49, age is a less advantageous factor for making an adjustment to other work than for those who are age 18–44. Accordingly, a finding of ''disabled'' is warranted for individuals age 45–49 who:

(i) Are restricted to sedentary work,

(ii) Are unskilled or have no transferable skills,

(iii) Have no past relevant work or can no longer perform past relevant work, and

(iv) Are unable to communicate in English, or are able to speak and understand English but are unable to read or write in English.

(2) For individuals who are under age 45, age is a more advantageous factor for making an adjustment to other work. It is usually not a significant factor in limiting such individuals' ability to make an adjustment to other work, including an adjustment to unskilled sedentary work, even when the individuals are unable to communicate in English or are illiterate in English.

(3) Nevertheless, a decision of ''disabled'' may be appropriate for some individuals under age 45 (or individuals age 45–49 for whom rule 201.17 does not direct a decision of disabled) who do not have the ability to perform a full range of sedentary work. However, the inability to perform a full range of sedentary work does not necessarily equate with a finding of ''disabled.'' Whether an individual will be able to make an adjustment to other work requires an adjudicative assessment of factors such as the type and extent of the individual's limitations or restrictions and the extent of the erosion of the occupational base. It requires an individualized determination that considers the impact of the limitations or restrictions on the number of sedentary, unskilled occupations or the total number of jobs to which the individual may be able to adjust, considering his or her age, education and work experience, including any transferable skills or education providing for direct entry into skilled work.

(4) ''Sedentary work'' represents a significantly restricted range of work, and individuals with a maximum sustained work capability limited to sedentary work have very serious functional limitations. Therefore, as with any case, a finding that an individual is limited to less than the full range of sedentary work will be based on careful consideration of the evidence of the individual's medical impairment(s) and the limitations and restrictions attributable to it. Such evidence must support the finding that the individual's residual functional capacity is limited to less than the full range of sedentary work.

(i) While illiteracy or the inability to communicate in English may significantly limit an individual's vocational scope, the primary work functions in the bulk of unskilled work relate to working with things (rather than with data or people) and in these work functions at the unskilled level, literacy or ability to communicate in English has the least significance. Similarly the lack of relevant work experience would have little significance since the bulk of unskilled jobs require no qualifying work experience. Thus, the functional capability for a full range of sedentary work represents sufficient numbers of jobs to indicate substantial vocational scope for those individuals age 18–44 even if they are illiterate or unable to communicate in English.

TABLE NO. 1—RESIDUAL FUNCTIONAL CAPACITY: MAXIMUM SUSTAINED WORK CAPABILITY LIMITED TO SEDENTARY WORK AS A RESULT OF SEVERE MEDICALLY DETERMINABLE IMPAIRMENT(S)

Rule	Age	Education	Previous work experience	Decision
201.01	Advanced age	Limited or less	Unskilled or none	Disabled
201.02	do	do	Skilled or semiskilled—skills not transferable [1].	Do.
201.03	do	do	Skilled or semiskilled—skills transferable [1].	Not disabled
201.04	do	High school graduate or more—does not provide for direct entry into skilled work [2].	Unskilled or none	Disabled
201.05	do	High school graduate or more—provides for direct entry into skilled work [2].	do	Not disabled
201.06	do	High school graduate or more—does not provide for direct entry into skilled work [2].	Skilled or semiskilled—skills not transferable [1].	Disabled
201.07	do	do	Skilled or semiskilled—skills transferable [1].	Not disabled
201.08	do	High school graduate or more—provides for direct entry into skilled work [2].	Skilled or semiskilled—skills not transferable [1].	Do.
201.09	Closely approaching advanced age.	Limited or less	Unskilled or none	Disabled
201.10	do	do	Skilled or semiskilled—skills not transferable.	Do.
201.11	do	do	Skilled or semiskilled—skills transferable.	Not disabled
201.12	do	High school graduate or more—does not provide for direct entry into skilled work [3].	Unskilled or none	Disabled
201.13	do	High school graduate or more—provides for direct entry into skilled work [3].	do	Not disabled
201.14	do	High school graduate or more—does not provide for direct entry into skilled work [3].	Skilled or semiskilled—skills not transferable.	Disabled
201.15	do	do	Skilled or semiskilled—skills transferable.	Not disabled
201.16	do	High school graduate or more—provides for direct entry into skilled work [3].	Skilled or semiskilled—skills not transferable.	Do.
201.17	Younger individual age 45–49.	Illiterate or unable to communicate in English.	Unskilled or none	Disabled
201.18	do	Limited or less—at least literate and able to communicate in English.	do	Not disabled
201.19	do	Limited or less	Skilled or semiskilled—skills not transferable.	Do.
201.20	do	do	Skilled or semiskilled—skills transferable.	Do.
201.21	do	High school graduate or more	Skilled or semiskilled—skills not transferable.	Do.
201.22	do	do	Skilled or semiskilled—skills transferable.	Do.

TABLE NO. 1—RESIDUAL FUNCTIONAL CAPACITY: MAXIMUM SUSTAINED WORK CAPABILITY LIMITED TO SEDENTARY WORK AS A RESULT OF SEVERE MEDICALLY DETERMINABLE IMPAIRMENT(S)—Continued

Rule	Age	Education	Previous work experience	Decision
201.23 ...	Younger individual age 18–44.	Illiterate or unable to communicate in English.	Unskilled or none	Do.[4]
201.24 ...	.....do	Limited or less—at least literate and able to communicate in English.	.....do	Do.[4]
201.25 ...	.....do	Limited or less	Skilled or semiskilled—skills not transferable.	Do.[4]
201.26 ...	.....do	.....do	Skilled or semiskilled—skills transferable.	Do.[4]
201.27 ...	.....do	High school graduate or more	Unskilled or none	Do.[4]
201.28 ...	.....do	.....do	Skilled or semiskilled—skills not transferable.	Do.[4]
201.29 ...	.....do	.....do	Skilled or semiskilled—skills transferable.	Do.[4]

[1] See 201.00(f).
[2] See 201.00(d).
[3] See 201.00(g).
[4] See 201.00(h).

202.00 *Maximum sustained work capability limited to light work as a result of severe medically determinable impairment(s).* (a) The functional capacity to perform a full range of light work includes the functional capacity to perform sedentary as well as light work. Approximately 1,600 separate sedentary and light unskilled occupations can be identified in eight broad occupational categories, each occupation representing numerous jobs in the national economy. These jobs can be performed after a short demonstration or within 30 days, and do not require special skills or experience.

(b) The functional capacity to perform a wide or full range of light work represents substantial work capability compatible with making a work adjustment to substantial numbers of unskilled jobs and, thus, generally provides sufficient occupational mobility even for severely impaired individuals who are not of advanced age and have sufficient educational competences for unskilled work.

(c) However, for individuals of advanced age who can no longer perform vocationally relevant past work and who have a history of unskilled work experience, or who have only skills that are not readily transferable to a significant range of semi-skilled or skilled work that is within the individual's functional capacity, or who have no work experience, the limitations in vocational adaptability represented by functional restriction to light work warrant a finding of disabled. Ordinarily, even a high school education or more which was completed in the remote past will have little positive impact on effecting a vocational adjustment unless relevant work experience reflects use of such education.

(d) Where the same factors in paragraph (c) of this section regarding education and work experience are present, but where age, though not advanced, is a factor which significantly limits vocational adaptability (*i.e.*, closely approaching advanced age, 50–54) and an individual's vocational scope is further significantly limited by illiteracy or inability to communicate in English, a finding of disabled is warranted.

(e) The presence of acquired skills that are readily transferable to a significant range of semi-skilled or skilled work within an individual's residual functional capacity would ordinarily warrant a finding of not disabled regardless of the adversity of age, or whether the individual's formal education is commensurate with his or her demonstrated skill level. The acquisition of work skills demonstrates the ability to perform work at the level of complexity demonstrated by the skill level attained regardless of the individual's formal educational attainments.

(f) For a finding of transferability of skills to light work for persons of advanced age who are closely approaching retirement age (age 60 or older), there must be very little, if any, vocational adjustment required in terms of tools, work processes, work settings, or the industry.

(g) While illiteracy or the inability to communicate in English may significantly limit an individual's vocational scope, the primary work functions in the bulk of unskilled work relate to working with things (rather than with data or people) and in these work functions at the unskilled level, literacy or ability to communicate in English has the least significance. Similarly, the lack of relevant work experience would have little significance since the bulk of unskilled jobs require no qualifying work experience. The capability for light work, which includes the ability to do sedentary work, represents the capability for substantial numbers of such

jobs. This, in turn, represents substantial vocational scope for younger individuals (age 18–49) even if illiterate or unable to communicate in English.

TABLE NO. 2—RESIDUAL FUNCTIONAL CAPACITY: MAXIMUM SUSTAINED WORK CAPABILITY LIMITED TO LIGHT WORK AS A RESULT OF SEVERE MEDICALLY DETERMINABLE IMPAIRMENT(S)

Rule	Age	Education	Previous work experience	Decision
202.01	Advanced age	Limited or less	Unskilled or none	Disabled.
202.02	.....do	.....do	Skilled or semiskilled—skills not transferable.	Do.
202.03	.....do	.....do	Skilled or semiskilled—skills transferable [1].	Not disabled.
202.04	.....do	High school graduate or more—does not provide for direct entry into skilled work [2].	Unskilled or none	Disabled.
202.05	.....do	High school graduate or more—provides for direct entry into skilled work [2].	.....do	Not disabled.
202.06	.....do	High school graduate or more—does not provide for direct entry into skilled work [2].	Skilled or semiskilled—skills not transferable.	Disabled.
202.07	.....do	.....do	Skilled or semiskilled—skills transferable [2].	Not disabled.
202.08	.....do	High school graduate or more—provides for direct entry into skilled work [2].	Skilled or semiskilled—skills not transferable.	Do.
202.09	Closely approaching advanced age.	Illiterate or unable to communicate in English.	Unskilled or none	Disabled.
202.10	.....do	Limited or less—at least literate and able to communicate in English.	.....do	Not disabled.
202.11	.....do	Limited or less	Skilled or semiskilled—skills not transferable.	Do.
202.12	.....do	.....do	Skilled or semiskilled—skills transferable.	Do.
202.13	.....do	High school graduate or more	Unskilled or none	Do.
202.14	.....do	.....do	Skilled or semiskilled—skills not transferable.	Do.
202.15	.....do	.....do	Skilled or semiskilled—skills transferable.	Do.
202.16	Younger individual	Illiterate or unable to communicate in English.	Unskilled or none	Do.
202.17	.....do	Limited or less—at least literate and able to communicate in English.	.....do	Do.
202.18	.....do	Limited or less	Skilled or semiskilled—skills not transferable.	Do.
202.19	.....do	.....do	Skilled or semiskilled—skills transferable.	Do.
202.20	.....do	High school graduate or more	Unskilled or none	Do.
202.21	.....do	.....do	Skilled or semiskilled—skills not transferable.	Do.
202.22	.....do	.....do	Skilled or semiskilled—skills transferable.	Do.

[1] See 202.00(f).
[2] See 202.00(c).

203.00 *Maximum sustained work capability limited to medium work as a result of severe medically determinable impairment(s).* (a) The functional capacity to perform medium work includes the functional capacity to perform sedentary, light, and medium work. Approximately 2,500 separate sedentary, light, and medium occupations can be identified, each occupation representing numerous jobs in the national economy which do not require skills or previous experience and which can be performed after a short demonstration or within 30 days.

(b) The functional capacity to perform medium work represents such substantial work capability at even the unskilled level that a finding of disabled is ordinarily not warranted in cases where a severely impaired person retains the functional capacity to perform medium work. Even the adversity of advanced age (55 or over) and a work history

of unskilled work may be offset by the substantial work capability represented by the functional capacity to perform medium work. However, we will find that a person who (1) has a marginal education, (2) has work experience of 35 years or more doing only arduous unskilled physical labor, (3) is not working, and (4) is no longer able to do this kind of work because of a severe impairment(s) is disabled, even though the person is able to do medium work. (*See* § 404.1562(a) in this subpart and § 416.962(a) in subpart I of part 416.)

(c) However, the absence of any relevant work experience becomes a more significant adversity for persons of advanced age (55 and over). Accordingly, this factor, in combination with a limited education or less, militates against making a vocational adjustment to even this substantial range of work and a finding of disabled is appropriate. Further, for persons closely approaching retirement age (60 or older) with a work history of unskilled work and with marginal education or less, a finding of disabled is appropriate.

TABLE NO. 3—RESIDUAL FUNCTIONAL CAPACITY: MAXIMUM SUSTAINED WORK CAPABILITY LIMITED TO MEDIUM WORK AS A RESULT OF SEVERE MEDICALLY DETERMINABLE IMPAIRMENT(S)

Rule	Age	Education	Previous work experience	Decision
203.01	Closely approaching retirement age.	Marginal or none	Unskilled or none	Disabled.
203.02	.....do	Limited or less	None	Do.
203.03	.....do	Limited	Unskilled	Not disabled.
203.04	.....do	Limited or less	Skilled or semiskilled—skills not transferable.	Do.
203.05	.....do	.....do	Skilled or semiskilled—skills transferable.	Do.
203.06	.....do	High school graduate or more	Unskilled or none	Do.
203.07	.....do	High school graduate or more—does not provide for direct entry into skilled work.	Skilled or semiskilled—skills not transferable.	Do.
203.08	.....do	.....do	Skilled or semiskilled—skills transferable.	Do.
203.09	.....do	High school graduate or more—provides for direct entry into skilled work.	Skilled or semiskilled—skills not transferable.	Do.
203.10	Advanced age	Limited or less	None	Disabled.
203.11	.....do	.....do	Unskilled	Not disabled.
203.12	.....do	.....do	Skilled or semiskilled—skills not transferable.	Do.
203.13	.....do	.....do	Skilled or semiskilled—skills transferable.	Do.
203.14	.....do	High school graduate or more	Unskilled or none	Do.
203.15	.....do	High school graduate or more—does not provide for direct entry into skilled work.	Skilled or semiskilled—skills not transferable.	Do.
203.16	.....do	.....do	Skilled or semiskilled—skills transferable.	Do.
203.17	.....do	High school graduate or more—provides for direct entry into skilled work.	Skilled or semiskilled—skills not transferable.	Do.
203.18	Closely approaching advanced age.	Limited or less	Unskilled or none	Do.
203.19	.....do	.....do	Skilled or semiskilled—skills not transferable.	Do.
203.20	.....do	.....do	Skilled or semiskilled—skills transferable.	Do.
203.21	.....do	High school graduate or more	Unskilled or none	Do.
203.22	.....do	High school graduate or more—does not provide for direct entry into skilled work.	Skilled or semiskilled—skills not transferable.	Do.
203.23	.....do	.....do	Skilled or semiskilled—skills transferable.	Do.
203.24	.....do	High school graduate or more—provides for direct entry into skilled work.	Skilled or semiskilled—skills not transferable.	Do.
203.25	Younger individual	Limited or less	Unskilled or none	Do.
203.26	.....do	.....do	Skilled or semiskilled—skills not transferable.	Do.
203.27	.....do	.....do	Skilled or semiskilled—skills transferable.	Do.
203.28	.....do	High school graduate or more	Unskilled or none	Do.

TABLE NO. 3—RESIDUAL FUNCTIONAL CAPACITY: MAXIMUM SUSTAINED WORK CAPABILITY LIMITED TO MEDIUM WORK AS A RESULT OF SEVERE MEDICALLY DETERMINABLE IMPAIRMENT(S)—Continued

Rule	Age	Education	Previous work experience	Decision
203.29	.....do	High school graduate or more—does not provide for direct entry into skilled work.	Skilled or semiskilled—skills not transferable.	Do.
203.30	.....do	.....do	Skilled or semiskilled—skills transferable.	Do.
203.31	.....do	High school graduate or more—provides for direct entry into skilled work.	Skilled or semiskilled—skills not transferable.	Do.

204.00 *Maximum sustained work capability limited to heavy work (or very heavy work) as a result of severe medically determinable impairment(s).* The residual functional capacity to perform heavy work or very heavy work includes the functional capability for work at the lesser functional levels as well, and represents substantial work capability for jobs in the national economy at all skill and physical demand levels. Individuals who retain the functional capacity to perform heavy work (or very heavy work) ordinarily will not have a severe impairment or will be able to do their past work—either of which would have already provided a basis for a decision of ''not disabled''. Environmental restrictions ordinarily would not significantly affect the range of work existing in the national economy for individuals with the physical capability for heavy work (or very heavy work). Thus an impairment which does not preclude heavy work (or very heavy work) would not ordinarily be the primary reason for unemployment, and generally is sufficient for a finding of not disabled, even though age, education, and skill level of prior work experience may be considered adverse.

[45 FR 55584, Aug. 20, 1980, as amended at 56 FR 57944, Nov. 14, 1991; 68 FR 51164, Aug. 26, 2003; 73 FR 64197, Oct. 29, 2008]

Subpart Q—Determinations of Disability

AUTHORITY: Secs. 205(a), 221, and 702(a)(5) of the Social Security Act (42 U.S.C. 405(a), 421, and 902(a)(5)).

SOURCE: 46 FR 29204, May 29, 1981, unless otherwise noted.

GENERAL PROVISIONS

§ 404.1601 Purpose and scope.

This subpart describes the standards of performance and administrative requirements and procedures for States making determinations of disability for the Commissioner under title II of the Act. It also establishes the Commissioner's responsibilities in carrying out the disability determination function.

(a) Sections 404.1601 through 404.1603 describe the purpose of the regulations and the meaning of terms frequently used in the regulations. They also briefly set forth the responsibilities of the Commissioner and the States covered in detail in other sections.

(b) Sections 404.1610 through 404.1618 describe the Commissioner's and the State's responsibilities in performing the disability determination function.

(c) Sections 404.1620 through 404.1633 describe the administrative responsibilities and requirements of the States. The corresponding role of the Commissioner is also set out.

(d) Sections 404.1640 through 404.1650 describe the performance accuracy and processing time standards for measuring State agency performance.

(e) Sections 404.1660 through 404.1661 describe when and what kind of assistance the Commissioner will provide State agencies to help them improve performance.

(f) Sections 404.1670 through 404.1675 describe the level of performance below which the Commissioner will consider a State agency to be substantially failing to make disability determinations consistent with the regulations and other written guidelines and the resulting action the Commissioner will take.

(g) Sections 404.1680 through 404.1683 describe the rules for resolving disputes concerning fiscal issues and providing hearings when we propose to find that a State is in substantial failure.

(h) Sections 404.1690 through 404.1694 describe when and what action the

Commissioner will take and what action the State will be expected to take if the Commissioner assumes the disability determination function from a State agency.

[46 FR 29204, May 29, 1981, as amended at 62 FR 38451, July 18, 1997; 71 FR 16445, Mar. 31, 2006; 76 FR 24808, May 3, 2011]

§ 404.1602 Definitions.

For purposes of this subpart:

Act means the Social Security Act, as amended.

Class or classes of cases means the categories into which disability claims are divided according to their characteristics.

Commissioner means the Commissioner of Social Security or his or her authorized designee.

Compassionate allowance means a determination or decision we make under a process that identifies for expedited handling claims that involve impairments that invariably qualify under the Listing of Impairments in appendix 1 to subpart P based on minimal, but sufficient, objective medical evidence.

Determination of disability or *disability determination* means one or more of the following decisions:

(a) Whether or not a person is under a disability;

(b) The date a person's disability began; or

(c) The date a person's disability ended.

Disability means *disability* or *blindness* as defined in sections 216(i) and 223 of the Act or as defined in title IV of the Federal Mine Safety and Health Act of 1977, as amended.

Disability determination function means making determinations as to disability and carrying out related administrative and other responsibilities.

Disability program means, as appropriate, the Federal programs for providing disability insurance benefits under title II of the Act and disability benefits under title IV of the Federal Mine Safety and Health Act of 1977, as amended.

Initial means the first level of disability adjudication.

Other written guidelines means written issuances such as Social Security Rulings and memoranda by the Commissioner of Social Security, the Deputy Commissioner for Programs and Policy, or the Associate Commissioner for Disability and the procedures, guides, and operating instructions in the Disability Insurance sections of the Program Operations Manual System, that are instructive, interpretive, clarifying, and/or administrative and not designated as advisory or discretionary. The purpose of including the foregoing material in the definition is to assure uniform national application of program standards and service delivery to the public.

Quick disability determination means an initial determination on a claim that we have identified as one that reflects a high degree of probability that you will be found disabled and where we expect that your allegations will be easily and quickly verified.

Regulations means regulations in this subpart issued under sections 205(a), 221 and 1102 of the Act, unless otherwise indicated.

State means any of the 50 States of the United States, the Commonwealth of Puerto Rico, the District of Columbia, or Guam. It includes the State agency.

State agency means that agency of a State which has been designated by the State to carry out the disability determination function.

We, us, and *our* refers to the Social Security Administration (SSA).

[46 FR 29204, May 29, 1981, as amended at 56 FR 11018, Mar. 14, 1991; 62 FR 38452, July 18, 1997; 72 FR 51177, Sept. 6, 2007; 75 FR 62682, Oct. 13, 2010]

§ 404.1603 Basic responsibilities for us and the State.

(a) *General.* We will work with the State to provide and maintain an effective system for processing claims of those who apply for and who are receiving benefits under the disability program. We will provide program standards, leadership, and oversight. We do not intend to become involved in the State's ongoing management of the program except as is necessary and in accordance with these regulations. The State will comply with our regulations and other written guidelines.

(b) *Our responsibilities.* We will:

(1) Periodically review the regulations and other written guidelines to

determine whether they insure effective and uniform administration of the disability program. To the extent feasible, we will consult with and take into consideration the experience of the States in issuing regulations and guidelines necessary to insure effective and uniform administration of the disability program;

(2) Provide training materials or in some instances conduct or specify training, see § 404.1622;

(3) Provide funds to the State agency for the necessary cost of performing the disability determination function, see § 404.1626;

(4) Monitor and evaluate the performance of the State agency under the established standards, see §§ 404.1644 and 404.1645; and

(5) Maintain liaison with the medical profession nationally and with national organizations and agencies whose interests or activities may affect the disability program.

(c) *Responsibilities of the State.* The State will:

(1) Provide management needed to insure that the State agency carries out the disability determination function so that disability determinations are made accurately and promptly;

(2) Provide an organizational structure, adequate facilities, qualified personnel, medical consultant services, designated quick disability determination examiners (§§ 404.1619 and 404.1620(c)), and a quality assurance function (§§ 404.1620 through 404.1624);

(3) Furnish reports and records relating to the administration of the disability program (§ 404.1625);

(4) Submit budgets (§ 404.1626);

(5) Cooperate with audits (§ 404.1627);

(6) Insure that all applicants for and recipients of disability benefits are treated equally and courteously;

(7) Be responsible for property used for disability program purposes (§ 404.1628);

(8) Take part in the research and demonstration projects (§ 404.1629);

(9) Coordinate with other agencies (§ 404.1630);

(10) Safeguard the records created by the State in performing the disability determination function (§ 404.1631);

(11) Comply with other provisions of the Federal law and regulations that apply to the State in performing the disability determination function;

(12) Comply with other written guidelines (§ 404.1633);

(13) Maintain liaison with the medical profession and organizations that may facilitate performing the disability determination function; and

(14) Assist us in other ways that we determine may promote the objectives of effective and uniform administration.

[46 FR 29204, May 29, 1981, as amended at 72 FR 51177, Sept. 6, 2007]

RESPONSIBILITIES FOR PERFORMING THE DISABILITY DETERMINATION FUNCTION

§ 404.1610 How a State notifies us that it wishes to perform the disability determination function.

(a) *Deemed notice.* Any State that has in effect as of June 1, 1981, an agreement with us to make disability determinations will be deemed to have given us notice that it wishes to perform the disability determination function, in lieu of continuing the agreement in effect after June 1, 1981.

(b) *Written notice.* After June 1, 1981, a State not making disability determinations that wishes to perform the disability determination function under these regulations must notify us in writing. The notice must be from an official authorized to act for the State for this purpose. The State will provide an opinion from the State's Attorney General verifying the authority of the official who sent the notice to act for the State.

§ 404.1611 How we notify a State whether it may perform the disability determination function.

(a) If a State notifies us in writing that it wishes to perform the disability determination function, we will notify the State in writing whether or not it may perform the function. The State will begin performing the disability determination function beginning with the month we and the State agree upon.

(b) If we have previously found that a State agency has substantially failed to make disability determinations in accordance with the law or these regulations and other written guidelines or

if the State has previously notified us in writing that it does not wish to make disability determinations, the notice will advise the State whether the State agency may again make the disability determinations and, if so, the date and the conditions under which the State may again make them.

§ 404.1613 Disability determinations the State makes.

(a) *General rule.* A State agency will make determinations of disability with respect to all persons in the State except those individuals whose cases are in a class specifically excluded by our written guidelines. A determination of disability made by the State is the determination of the Commissioner, except as described in § 404.1503(d)(1).

(b) *New classes of cases.* Where any new class or classes of cases arise requiring determinations of disability, we will determine the conditions under which a State may choose not to make the disability determinations. We will provide the State with the necessary funding to do the additional work.

(c) *Temporary transfer of classes of cases.* We will make disability determinations for classes of cases temporarily transferred to us by the State agency if the State agency asks us to do so and we agree. The State agency will make written arrangements with us which will specify the period of time and the class or classes of cases we will do.

[46 FR 29204, May 29, 1981, as amended at 62 FR 38452, July 18, 1997]

§ 404.1614 Responsibilities for obtaining evidence to make disability determinations.

(a) We or the State agency will secure from the claimant or other sources any evidence the State agency needs to make a disability determination. When we secure the evidence, we will furnish it to the State agency for use in making the disability determination.

(b) At our request, the State agency will obtain and furnish medical or other evidence and provide assistance as may be necessary for us to carry out our responsibilities—

(1) For making disability determinations in those classes of cases described in the written guidelines for which the State agency does not make the determination; or

(2) Under international agreements with respect to social security benefits payable under section 233 of the Act.

[46 FR 29204, May 29, 1981, as amended at 79 FR 33682, June 12, 2014]

§ 404.1615 Making disability determinations.

(a) When making a disability determination, the State agency will apply subpart P, part 404, of our regulations.

(b) The State agency will make disability determinations based only on the medical and nonmedical evidence in its files.

(c) Disability determinations will be made by:

(1) A State agency medical or psychological consultant and a State agency disability examiner;

(2) A State agency disability examiner alone when there is no medical evidence to be evaluated (*i.e.*, no medical evidence exists or we are unable, despite making every reasonable effort, to obtain any medical evidence that may exist) and the individual fails or refuses, without a good reason, to attend a consultative examination (see § 404.1518);

(3) A State agency disability examiner alone if the claim is adjudicated under the quick disability determination process (see § 404.1619) or the compassionate allowance process (see § 404.1602), and the initial or reconsidered determination is fully favorable to you. This paragraph will no longer be effective on November 13, 2015 unless we terminate it earlier or extend it beyond that date by publication of a final rule in the FEDERAL REGISTER; or

(4) A State agency disability hearing officer.

See § 404.1616 for the definition of medical or psychological consultant and § 404.915 for the definition of disability hearing officer. The State agency disability examiner and disability hearing officer must be qualified to interpret and evaluate medical reports and other evidence relating to the claimant's physical or mental impairments and as necessary to determine the capacities of the claimant to perform substantial gainful activity.

See § 404.1572 for what we mean by substantial gainful activity.

(d) An initial determination by the State agency that an individual is not disabled, in any case where there is evidence which indicates the existence of a mental impairment, will be made only after every reasonable effort has been made to ensure that a qualified psychiatrist or psychologist has completed the medical portion of the case review and any applicable residual functional capacity assessment. (See § 404.1616 for the qualifications we consider necessary for a psychologist to be a psychological consultant and § 404.1617 for what we mean by ''reasonable effort''.) If the services of qualified psychiatrists or psychologists cannot be obtained because of impediments at the State level, the Commissioner may contract directly for the services. In a case where there is evidence of mental and nonmental impairments and a qualified psychologist serves as a psychological consultant, the psychologist will evaluate only the mental impairment, and a physician will evaluate the nonmental impairment.

(e) The State agency will certify each determination of disability to us on forms we provide.

(f) The State agency will furnish us with all the evidence it considered in making its determination.

(g) The State agency will not be responsible for defending in court any determination made, or any procedure for making determinations, under these regulations.

[52 FR 33926, Sept. 9, 1987, as amended at 56 FR 11018, Mar. 14, 1991; 61 FR 11135, Mar. 19, 1996; 62 FR 38452, July 18, 1997; 65 FR 34958, June 1, 2000; 75 FR 62682, Oct. 13, 2010; 78 FR 66639, Nov. 6, 2013; 79 FR 51243, Aug. 28, 2014]

§ 404.1616 Medical or psychological consultants.

(a) *What is a medical consultant?* A medical consultant is a person who is a member of a team that makes disability determinations in a State agency, as explained in § 404.1615, or who is a member of a team that makes disability determinations for us when we make disability determinations ourselves.

(b) *What qualifications must a medical consultant have?* A medical consultant must be an acceptable medical source identified in § 404.1513(a)(1) or (a)(3) through (a)(5); that is, a licensed physician (medical or osteopathic), a licensed optometrist, a licensed podiatrist, or a qualified speech-language pathologist. The medical consultant must meet any appropriate qualifications for his or her specialty as explained in § 404.1513(a).

(c) *Are there any limitations on what medical consultants who are not physicians can evaluate?* Medical consultants who are not physicians are limited to evaluating the impairments for which they are qualified, as described in § 404.1513(a). Medical consultants who are not physicians also are limited as to when they may serve as a member of a team that makes a disability determination. For example, a speech-language pathologist who is a medical consultant in a State agency may be a member of a team that makes a disability determination in a claim only if a speech or language impairment is the only impairment in the claim or if there is a combination of a speech or language impairment with another impairment but the speech or language impairment alone would justify a finding of disability. In all other cases, a physician will be a member of the team that makes a disability determination, except in cases in which this function may be performed by a psychological consultant as discussed in paragraph (f) of this section and § 404.1615(d).

(d) *What is a psychological consultant?* A psychological consultant is a psychologist who has the same responsibilities as a medical consultant explained in paragraph (a) of this section, but who can evaluate only mental impairments.

(e) *What qualifications must a psychological consultant have?* A psychological consultant used in cases where there is evidence of a mental impairment must be a qualified psychologist. For disability program purposes, a psychologist will not be considered qualified unless he or she:

(1) Is licensed or certified as a psychologist at the independent practice level of psychology by the State in which he or she practices; and

(2)(i) Possesses a doctorate degree in psychology from a program in clinical

psychology of an educational institution accredited by an organization recognized by the Council on Post-Secondary Accreditation; or

(ii) Is listed in a national register of health service providers in psychology which the Commissioner of Social Security deems appropriate; and

(3) Possesses 2 years of supervised clinical experience as a psychologist in health service, at least 1 year of which is post masters degree.

(f) *Are there any limitations on what a psychological consultant can evaluate?* Psychological consultants are limited to the evaluation of mental impairments, as explained in § 404.1615(d). Psychological consultants also are limited as to when they can serve as a member of a team that makes a disability determination. They may do so only when a mental impairment is the only impairment in the claim or when there is a combination of a mental impairment with another impairment but the mental impairment alone would justify a finding of disability.

[65 FR 34958, June 1, 2000, as amended at 71 FR 16445, Mar. 31, 2006; 76 FR 24808, May 3, 2011]

§ 404.1617 Reasonable efforts to obtain review by a qualified psychiatrist or psychologist.

(a) The State agency must determine if additional qualified psychiatrists and psychologists are needed to make the necessary reviews (see § 404.1615(d)). Where it does not have sufficient resources to make the necessary reviews, the State agency must attempt to obtain the resources needed. If the State agency is unable to obtain additional psychiatrists and psychologists because of low salary rates or fee schedules it should attempt to raise the State agency's levels of compensation to meet the prevailing rates for psychiatrists' and psychologists' services. If these efforts are unsuccessful, the State agency will seek assistance from us. We will assist the State agency as necessary. We will also monitor the State agency's efforts and where the State agency is unable to obtain the necessary services, we will make every reasonable effort to provide the services using Federal resources.

(b) Federal resources may include the use of Federal contracts for the services of qualified psychiatrists and psychologists to review mental impairment cases. Where Federal resources are required to perform these reviews, which are a basic State agency responsibility, and where appropriate, the State agency's budget will be reduced accordingly.

(c) Where every reasonable effort is made to obtain the services of a qualified psychiatrist or psychologist to review a mental impairment case, but the professional services are not obtained, a physician who is not a psychiatrist will review the mental impairment case. For these purposes, every reasonable effort to ensure that a qualified psychiatrist or psychologist review mental impairment cases will be considered to have been made only after efforts by both State and Federal agencies as set forth in paragraphs (a) and (b) of this section are made.

[52 FR 33927, Sept. 9, 1987]

§ 404.1618 Notifying claimants of the disability determination.

The State agency will prepare denial notices in accordance with subpart J of this part whenever it makes a disability determination which is fully or partially unfavorable to the claimant.

[46 FR 29204, May 29, 1981, as amended at 75 FR 33168, June 11, 2010]

QUICK DISABILITY DETERMINATIONS

§ 404.1619 Quick disability determination process.

(a) If we identify a claim as one involving a high degree of probability that the individual is disabled, and we expect that the individual's allegations will be easily and quickly verified, we will refer the claim to the State agency for consideration under the quick disability determination process pursuant to this section and § 404.1620(c).

(b) If we refer a claim to the State agency for a quick disability determination, a designated quick disability determination examiner must do all of the following:

(1) Subject to the provisions in paragraph (c) of this section, make the disability determination after consulting

with a State agency medical or psychological consultant if the State agency disability examiner determines consultation is appropriate or if consultation is required under § 404.1526(c). The State agency may certify the disability determination forms to us without the signature of the medical or psychological consultant.

(2) Make the quick disability determination based only on the medical and nonmedical evidence in the file.

(3) Subject to the provisions in paragraph (c) of this section, make the quick disability determination by applying the rules in subpart P of this part.

(c) If the quick disability determination examiner cannot make a determination that is fully favorable, or if there is an unresolved disagreement between the disability examiner and the medical or psychological consultant (except when a disability examiner makes the determination alone under § 404.1615(c)(3)), the State agency will adjudicate the claim using the regularly applicable procedures in this subpart.

[72 FR 51177, Sept. 6, 2007, as amended at 75 FR 62682, Oct. 13, 2010]

ADMINISTRATIVE RESPONSIBILITIES AND REQUIREMENTS

§ 404.1620 General administrative requirements.

(a) The State will provide the organizational structure, qualified personnel, medical consultant services, and a quality assurance function sufficient to ensure that disability determinations are made accurately and promptly. We may impose specific administrative requirements in these areas and in those under ''Administrative Responsibilities and Requirements'' in order to establish uniform, national administrative practices or to correct the areas of deficiencies which may later cause the State to be substantially failing to comply with our regulations or other written guidelines. We will notify the State, in writing, of the administrative requirements being imposed and of any administrative deficiencies it is required to correct. We will allow the State 90 days from the date of this notice to make appropriate corrections. Once corrected, we will monitor the State's administrative practices for 180 days. If the State does not meet the requirements or correct all of the deficiencies, or, if some of the deficiencies recur, we may initiate procedures to determine if the State is substantially failing to follow our regulations or other written guidelines.

(b) The State is responsible for making accurate and prompt disability determinations.

(c) Each State agency will designate experienced disability examiners to handle claims we refer to it under § 404.1619(a).

[46 FR 29204, May 29, 1981, as amended at 56 FR 11018, Mar. 14, 1991; 72 FR 51177, Sept. 6, 2007]

§ 404.1621 Personnel.

(a) *Equal employment opportunity*. The State will comply with all applicable Federal statutes, executive orders and regulations concerned with equal employment opportunities.

(b) *Selection, tenure, and compensation*. The State agency will, except as may be inconsistent with paragraph (a) of this section, adhere to applicable State approved personnel standards in the selection, tenure, and compensation of any individual employed in the disability program.

(c) *Travel*. The State will make personnel available to attend meetings or workshops as may be sponsored or approved by us for furthering the purposes of the disability program.

(d) *Restrictions*. Subject to appropriate Federal funding, the State will, to the best of its ability, facilitate the processing of disability claims by avoiding personnel freezes, restrictions against overtime work, or curtailment of facilities or activities.

§ 404.1622 Training.

The State will insure that all employees have an acceptable level of competence. We will provide training and other instructional materials to facilitate basic and advanced technical proficiency of disability staff in order to insure uniformity and effectiveness in the administration of the disability program. We will conduct or specify training, as appropriate, but only if:

(a) A State agency's performance approaches unacceptable levels; or

(b) The material required for the training is complex or the capacity of the State to deliver the training is in doubt and uniformity of the training is essential.

§ 404.1623 Facilities.

(a) *Space, equipment, supplies, and other services.* Subject to appropriate Federal funding, the State will provide adequate space, equipment, supplies, and other services to facilitate making accurate and prompt disability determinations.

(b) *Location of facilities.* Subject to appropriate Federal funding, the State will determine the location where the disability determination function is to be performed so that disability determinations are made accurately and promptly.

(c) *Access.* The State will permit us access to the premises where the disability determination function is performed and also where it is managed for the purposes of inspecting and obtaining information about the work and activities required by our regulations and assuring compliance with pertinent Federal statutes and regulations. Access includes personal onsite visits and other means, such as telecommunications, of contacting the State agency to obtain information about its functions. We will contact the State agency and give reasonable prior notice of the times and purposes of any visits.

[46 FR 29204, May 29, 1981, as amended at 56 FR 11019, Mar. 14, 1991]

§ 404.1624 Medical and other purchased services.

The State will determine the rates of payment for purchasing medical or other services necessary to make determinations of disability. The rates may not exceed the highest rate paid by Federal or other agencies in the State for the same or similar type of service. The State will maintain documentation to support the rates of payment it uses.

[46 FR 29204, May 29, 1981,as amended at 71 FR 16445, Mar. 31, 2006; 76 FR 24808, May 3, 2011]

§ 404.1625 Records and reports.

(a) The State will establish and maintain the records and furnish the schedules, financial, cost, and other reports relating to the administration of the disability programs as we may require.

(b) The State will permit us and the Comptroller General of the United States (including duly authorized representatives) access to and the right to examine records relating to the work which the State performs under these regulations. These records will be retained by the State for the periods of time specified for retention of records in the Federal Procurement Regulations (41 CFR parts 1–20).

§ 404.1626 Fiscal.

(a) We will give the State funds, in advance or by way of reimbursement, for necessary costs in making disability determinations under these regulations. Necessary costs are direct as well as indirect costs as defined in 41 CFR part 1–15, subpart 1–15.7 of the Federal Procurement Regulations System for costs incurred before April 1, 1984; and 48 CFR part 31, subpart 31.6 of the Federal Acquisition Regulations System and Federal Management Circular A–74–4[1] as amended or superseded for costs incurred after March 31, 1984.

(b) The State will submit estimates of anticipated costs in the form of a budget at the time and in the manner we require.

(c) We will notify the State of the amount which will be made available to it as well as what anticipated costs are being approved.

(d) The State may not incur or make expenditures for items of cost not approved by us or in excess of the amount we make available to the State.

(e) After the close of a period for which funds have been made available to the State, the State will submit a report of its expenditures. Based on an audit arranged by the State under Pub. L. 98–502, the Single Audit Act of 1984, or by the Inspector General of the Social Security Administration or based

[1] The circular is available from the Office of Administration, Publications Unit, Rm. G–236, New Executive Office Bldg., Washington, DC 20503.

on an audit or review by the Social Security Administration (see § 404.1627), we will determine whether the expenditures were consistent with cost principles described in 41 CFR part 1–15, subpart 1–15.7 for costs incurred before April 1, 1984; and 48 CFR part 31, subpart 31.6 and Federal Management Circular A–741–4 for costs incurred after March 31, 1984: and in other applicable written guidelines in effect at the time the expenditures were made or incurred.

(f) Any monies paid to the State which are used for purposes not within the scope of these regulations will be paid back to the Treasury of the United States.

[46 FR 29204, May 29, 1981, as amended at 56 FR 11019, Mar. 14, 1991; 62 FR 38452, July 18, 1997]

§ 404.1627 Audits.

(a) *Audits performed by the State*—(1) *Generally*. Audits of accounts and records pertaining to the administration of the disability program under the Act, will be performed by the States in accordance with the Single Audit Act of 1984 (Pub. L. 98–502) which establishes audit requirements for States receiving Federal assistance. If the audit performed by the State meets our program requirements, we will accept the findings and recommendations of the audit. The State will make every effort to act upon and resolve any items questioned in the audit.

(2) *Questioned items*. Items questioned as a result of an audit under the Single Audit Act of 1984 of a cross-cutting nature will be resolved by the Department of Health and Human Services, Office of Grant and Contract Financial Management. A cross-cutting issue is one that involves more than one Federal awarding agency. Questioned items affecting only the disability program will be resolved by SSA in accord with paragraph (b)(2) of this section,

(3) *State appeal of audit determinations*. The Office of Grant and Contract Financial Management will notify the State of its determination on questioned cross-cutting items. If the State disagrees with that determination, it may appeal in writing within 60 days of receiving the determination. State appeals of a cross-cutting issue as a result of an audit under the Single Audit Act of 1984 will be made to the Department of Health and Human Services' Departmental Appeals Board. The rules for hearings and appeals are provided in 45 CFR part 16.

(b) *Audits performed by the Commissioner*—(1) *Generally*. If the State does not perform an audit under the Single Audit Act of 1984 or the audit performed is not satisfactory for disability program purposes, the books of account and records in the State pertaining to the administrations of the disability programs under the Act will be audited by the SSA's Inspector General or audited or reviewed by SSA as appropriate. These audits or reviews will be conducted to determine whether the expenditures were made for the intended purposes and in amounts necessary for the proper and efficient administration of the disability programs. Audits or reviews will also be made to inspect the work and activities required by the regulations to ensure compliance with pertinent Federal statutes and regulations. The State will make every effort to act upon and resolve any items questioned in an audit or review.

(2) *Questioned items*. Expenditures of State agencies will be audited or reviewed, as appropriate, on the basis of cost principles and written guidelines in effect at the time the expenditures were made or incurred. Both the State and the State agency will be informed and given a full explanation of any items questioned. They will be given reasonable time to explain items questioned. Any explanation furnished by the State or State agency will be given full consideration before a final determination is made on the audit or review report.

(3) *State appeal of audit determinations*. The appropriate Social Security Administration Regional Commissioner will notify the State of his or her determination on the audit or review report. If the State disagrees with that determination, the State may request reconsideration in writing within 60 days of the date of the Regional Commissioner's notice of the determination. The written request may be made, through the Associate Commissioner,

Office of Disability, to the Commissioner of Social Security, room 900, Altmeyer Building, 6401 Security Boulevard, Baltimore, Maryland 21235. The Commissioner will make a determination and notify the State of the decision in writing no later than 90 days from the date the Social Security Administration receives the State's appeal and all supporting documents. The decision by the Commissioner on other than monetary disallowances will be final and binding upon the State. The decision by the Commissioner on monetary disallowances will be final and binding upon the State unless the State appeals the decision in writing to the Department of Health and Human Services, Departmental Appeals Board within 30 days after receiving the Commissioner's decision. See § 404.1683.

[56 FR 11019, Mar. 14, 1991, as amended at 62 FR 38452, July 18, 1997]

§ 404.1628 Property.

The State will have title to equipment purchased for disability program purposes. The State will be responsible for maintaining all property it acquires or which we furnish to it for performing the disability determination function. The State will identify the equipment by labeling and by inventory and will credit the SSA account with the fair market value of disposed property.

In the event we assume the disability determination function from a State, ownership of all property and equipment acquired with SSA funds will be transferred to us effective on the date the State is notified that we are assuming the disability determination function or we are notified that the State is terminating the relationship.

§ 404.1629 Participation in research and demonstration projects.

We will invite State participation in federally funded research and demonstration projects to assess the effectiveness of the disability program and to ascertain the effect of program policy changes. Where we determine that State participation is necessary for the project to be complete, for example, to provide national uniformity in a claims process, State participation is mandatory.

§ 404.1630 Coordination with other agencies.

(a) The State will establish cooperative working relationships with other agencies concerned with serving the disabled and, insofar as practicable, use their services, facilities, and records to:

(1) Assist the State in developing evidence and making determinations of disability; and

(2) Insure that referral of disabled or blind persons for rehabilitation services will be carried out effectively.

(b) The State may pay these agencies for the services, facilities, or records they provide. The State will include these costs in its estimates of anticipated costs and reports of actual expenditures.

§ 404.1631 Confidentiality of information and records.

The State will comply with the confidentiality of information, including the security of systems, and records requirements described in 20 CFR part 401 and pertinent written guidelines (see § 404.1633).

§ 404.1632 Other Federal laws and regulations.

The State will comply with the provisions of other Federal laws and regulations that directly affect its responsibilities in carrying out the disability determination function; for example, Treasury Department regulations on letters of credit (31 CFR part 205).

§ 404.1633 Policies and operating instructions.

(a) We will provide the State agency with written guidelines necessary for it to carry out its responsibilities in performing the disability determination function.

(b) The State agency making determinations of disability will comply with our written guidelines that are not designated as advisory or discretionary. (See § 404.1602 for what we mean by written guidelines.)

(c) A representative group of State agencies will be given an opportunity to participate in formulating disability program policies that have an affect on their role in carrying out the disability determination function. State agencies

will also be given an opportunity to comment before changes are made in written guidelines unless delay in issuing a change may impair service to the public.

[46 FR 29204, May 29, 1981, as amended at 56 FR 11020, Mar. 14, 1991]

PERFORMANCE STANDARDS

§ 404.1640 General.

The following sections provide the procedures and guidelines we use to determine whether the State agency is substantially complying with our regulations and other written guidelines, including meeting established national performance standards. We use performance standards to help assure effective and uniform administration of our disability programs and to measure whether the performance of the disability determination function by each State agency is acceptable. Also, the standards are designed to improve overall State agency performance in the disability determination process and to ensure that benefits are made available to all eligible persons in an accurate and efficient manner. We measure the performance of a State agency in two areas—processing time and quality of documentation and decisions on claims. State agency compliance is also judged by State agency adherence to other program requirements.

[56 FR 11020, Mar. 14, 1991]

§ 404.1641 Standards of performance.

(a) *General*. The performance standards include both a target level of performance and a threshold level of performance for the State agency. The target level represents a level of performance that we and the States will work to attain in the future. The threshold level is the minimum acceptable level of performance. Performance below the threshold level will be the basis for the Commissioner's taking from the State agency partial or complete responsibility for performing the disability determination function. Intermediate State agency goals are designed to help each State agency move from its current performance levels to the target levels.

(b) *The target level*. The target level is the optimum level of performance. There are three targets—one for combined title II and title XVI initial performance accuracy, one for title II initial processing time, and one for title XVI initial processing time.

(c) *The threshold level*. The threshold level is the minimum acceptable level of performance. There are three thresholds—one for combined title II and title XVI initial performance accuracy, one for title II initial processing time, and one for title XVI initial processing time.

(d) *Intermediate goals*. Intermediate goals are levels of performance between the threshold levels and the target levels established by our appropriate Regional Commissioner after negotiation with each State agency. The intermediate goals are designed to help the State agencies reach the target levels. Failure to meet these goals is not a cause for considering the State agency to be substantially failing to comply with the performance standards. However, failure to meet the intermediate goals may result in consultation and an offer of optional performance support depending on the availability of our resources.

[46 FR 29204, May 29, 1981, as amended at 56 FR 11020, Mar. 14, 1991; 62 FR 38452, July 18, 1997]

§ 404.1642 Processing time standards.

(a) *General*. Title II processing time refers to the average number of days, including Saturdays, Sundays, and holidays, it takes a State agency to process an initial disability claim from the day the case folder is received in the State agency until the day it is released to us by the State agency. Title XVI processing time refers to the average number of days, including Saturdays, Sundays, and holidays, from the day of receipt of the initial disability claim in the State agency until systems input of a presumptive disability decision or the day the case folder is released to us by the State agency, whichever is earlier.

(b) *Target levels*. The processing time target levels are:

(1) 37 days for title II initial claims.

(2) 43 days for title XVI initial claims.

(c) *Threshold levels.* The processing time threshold levels are:

(1) 49.5 days for title II initial claims.

(2) 57.9 days for title XVI initial claims.

[46 FR 29204, May 29, 1981, as amended at 56 FR 11020, Mar. 14, 1991]

§ 404.1643 Performance accuracy standard.

(a) *General.* Performance accuracy refers to the percentage of cases that do not have to be returned to State agencies for further development or correction of decisions based on evidence in the files and as such represents the reliability of State agency adjudication. The definition of performance accuracy includes the measurement of factors that have a potential for affecting a decision, as well as the correctness of the decision. For example, if a particular item of medical evidence should have been in the file but was not included, even though its inclusion does not change the result in the case, that is a performance error. Performance accuracy, therefore, is a higher standard than decisional accuracy. As a result, the percentage of correct decisions is significantly higher than what is reflected in the error rate established by SSA's quality assurance system.

(b) *Target level.* The State agency initial performance accuracy target level for combined title II and title XVI cases is 97 percent with a corresponding decision accuracy rate of 99 percent.

(c) *Intermediate goals.* These goals will be established annually by SSA's regional commissioner after negotiation with the State and should be used as stepping stones to progress towards our targeted level of performance.

(d) *Threshold levels.* The State agency initial performance accuracy threshold level for combined title II and title XVI cases is 90.6 percent.

§ 404.1644 How and when we determine whether the processing time standards are met.

(a) *How we determine processing times.* For all initial title II cases, we calculate the mean number of days, including Saturdays, Sundays and holidays, from the day the case folder is received in the State agency until the day it is released to us by the State agency. For initial title XVI cases, we calculate the mean number of days, including Saturdays, Sundays, and holidays, from the day the case folder is received in the State agency until the day there is a systems input of a presumptive disability decision or the day the case folder is released to us by the State agency, whichever is earlier.

(b) *Frequency of review.* Title II processing times and title XVI processing times are monitored separately on a quarterly basis. The determination as to whether or not the processing time thresholds have been met is made at the end of each quarter each year. Quarterly State-by-State mean processing times are compared with the threshold levels for both title II and title XVI.

[46 FR 29204, May 29, 1981, as amended at 56 FR 11020, Mar. 14, 1991]

§ 404.1645 How and when we determine whether the performance accuracy standard is met.

(a) *How we determine performance accuracy.* We determine a State agency's performance accuracy rate on the basis of decision and documentation errors identified in our review of the sample cases.

(b) *Frequency of review.* Title II and title XVI initial performance accuracy are monitored together on a quarterly basis. The determinations as to whether the performance accuracy threshold has been met is made at the end of each quarter each year. Quarterly State-by-State combined initial performance accuracy rates are compared to the established threshold level.

§ 404.1650 Action we will take if a State agency does not meet the standards.

If a State agency does not meet two of the three established threshold levels (one of which must be performance accuracy) for two or more consecutive calendar quarters, we will notify the State agency in writing that it is not meeting the standards. Following our notification, we will provide the State agency appropriate performance support described in §§ 404.1660, 404.1661 and 404.1662 for a period of up to 12 months.

[56 FR 11020, Mar. 14, 1991]

PERFORMANCE MONITORING AND SUPPORT

§ 404.1660 How we will monitor.

We will regularly analyze State agency combined title II and title XVI initial performance accuracy rate, title II initial processing time, and title XVI initial processing time. Within budgeted resources, we will also routinely conduct fiscal and administrative management reviews and special onsite reviews. A fiscal and administrative management review is a fact-finding mission to review particular aspects of State agency operations. During these reviews we will also review the quality assurance function. This regular monitoring and review program will allow us to determine the progress each State is making and the type and extent of performance support we will provide to help the State progress toward threshold, intermediate, and/or target levels.

[56 FR 11020, Mar. 14, 1991]

§ 404.1661 When we will provide performance support.

(a) *Optional support.* We may offer, or a State may request, performance support at any time that the regular monitoring and review process reveals that support could enhance performance. The State does not have to be below the initial performance accuracy rate of 90.6 percent to receive performance support. Support will be offered, or granted upon request, based on available resources.

(b) *Mandatory support.* (1) We will provide a State agency with mandatory performance support if regular monitoring and review reveal that two of three threshold levels (one of which must be performance accuracy) are not met for two consecutive calendar quarters.

(2) We may also decide to provide a State agency with mandatory performance support if regular monitoring and review reveal that any one of the three threshold levels is not met for two consecutive calendar quarters. Support will be provided based on available resources.

(3) The threshold levels are:

(i) Combined title II and title XVI initial performance accuracy rate—90.6 percent,

(ii) Title II initial processing time—49.5 days, and

(iii) Title XVI initial processing time—57.9 days.

[56 FR 11020, Mar. 14, 1991]

§ 404.1662 What support we will provide.

Performance support may include, but is not limited to, any or all of the following:

(a) An onsite review of cases processed by the State agency emphasizing adherence to written guidelines.

(b) A request that necessary administrative measures be implemented (e.g., filling staffing vacancies, using overtime, assisting with training activities, etc.).

(c) Provisions for Federal personnel to perform onsite reviews, conduct training, or perform other functions needed to improve performance.

(d) Provisions for fiscal aid to allow for overtime, temporary hiring of additional staff, etc., above the authorized budget.

[56 FR 11020, Mar. 14, 1991]

SUBSTANTIAL FAILURE

§ 404.1670 General.

After a State agency falls below two of three established threshold levels, one being performance accuracy, for two consecutive quarters, and after the mandatory performance support period, we will give the State agency a 3-month adjustment period. During this 3-month period we will not require the State agency to meet the threshold levels. Following the adjustment period, if the State agency again falls below two of three threshold levels, one being performance accuracy, in two consecutive quarters during the next 12 months, we will notify the State that we propose to find that the State agency has substantially failed to comply with our standards and advise it that it may request a hearing on that issue. After giving the State notice and an opportunity for a hearing, if it is found that a State agency has substantially

failed to make disability determinations consistent with the Act, our regulations or other written guidelines, we will assume partial or complete responsibility for performing the disability determination function after we have complied with §§ 404.1690 and 404.1692.

[56 FR 11021, Mar. 14, 1991]

§ 404.1671 Good cause for not following the Act, our regulations, or other written guidelines.

If a State has good cause for not following the Act, our regulations, or other written guidelines, we will not find that the State agency has substantially failed to meet our standards. We will determine if good cause exists. Some of the factors relevant to good cause are:

(a) Disasters such as fire, flood, or civil disorder, that—

(1) Require the diversion of significant personnel normally assigned to the disability determination function, or

(2) Destroyed or delayed access to significant records needed to make accurate disability determinations;

(b) Strikes of State agency staff or other government or private personnel necessary to the performance of the disability determination function;

(c) Sudden and unanticipated workload changes which result from changes in Federal law, regulations, or written guidelines, systems modification or systems malfunctions, or rapid, unpredictable caseload growth for a 6-month period or longer.

[56 FR 11021, Mar. 14, 1991]

§ 404.1675 Finding of substantial failure.

A finding of substantial failure with respect to a State may not be made unless and until the State is afforded an opportunity for a hearing.

HEARINGS AND APPEALS

§ 404.1680 Notice of right to hearing on proposed finding of substantial failure.

If, following the mandatory performance support period and the 3-month adjustment period, a State agency again falls below two of three threshold levels (one being performance accuracy) in two consecutive quarters in the succeeding 12 months, we will notify the State in writing that we will find that the State agency has substantially failed to meet our standards unless the State submits a written request for a hearing with the Department of Health and Human Services' Departmental Appeals Board within 30 days after receiving the notice. The notice will identify the threshold levels that were not met by the State agency, the period during which the thresholds were not met and the accuracy and processing time levels attained by the State agency during this period. If a hearing is not requested, the State agency will be found to have substantially failed to meet our standards, and we will implement our plans to assume the disability determination function.

[56 FR 11021, Mar. 14, 1991]

§ 404.1681 Disputes on matters other than substantial failure.

Disputes concerning monetary disallowances will be resolved in proceedings before the Department of Health and Human Services' Departmental Appeals Board if the issue cannot be resolved between us and the State. Disputes other than monetary disallowances will be resolved through an appeal to the Commissioner of Social Security, who will make the final decision. (See § 404.1627.)

[56 FR 11021, Mar. 14, 1991]

§ 404.1682 Who conducts the hearings.

If a hearing is required, it will be conducted by the Department of Health and Human Services' Grant Appeals Board (the Board).

[46 FR 29204, May 29, 1981, as amended at 62 FR 38452, July 18, 1997]

§ 404.1683 Hearings and appeals process.

The rules for hearings and appeals before the Board are provided in 45 CFR part 16. A notice under § 404.1680 of this subpart will be considered a ''final written decision'' for purposes of Board review.

ASSUMPTION OF DISABILITY DETERMINATION FUNCTION

§ 404.1690 Assumption when we make a finding of substantial failure.

(a) *Notice to State.* When we find that substantial failure exists, we will notify the State in writing that we will assume responsibility for performing the disability determination function from the State agency, whether the assumption will be partial or complete, and the date on which the assumption will be effective.

(b) *Effective date of assumption.* The date of any partial or complete assumption of the disability determination function from a State agency may not be earlier than 180 days after our finding of substantial failure, and not before compliance with the requirements of § 404.1692.

§ 404.1691 Assumption when State no longer wishes to perform the disability determination function.

(a) *Notice to the Commissioner.* If a State no longer wishes to perform the disability determination function, it will notify us in writing. The notice must be from an official authorized to act for the State for this purpose. The State will provide an opinion from the State's Attorney General verifying the authority of the official who gave the notice.

(b) *Effective date of assumption.* The State agency will continue to perform whatever activities of the disability determination function it is performing at the time the notice referred to in paragraph (a) of this section is given for not less than 180 days or, if later, until we have complied with the requirements of § 404.1692. For example, if the State is not making disability determinations (because we previously assumed responsibility for making them) but is performing other activities related to the disability determination function at the time it gives notice, the State will continue to do these activities until the requirements of this paragraph are met. Thereafter, we will assume complete responsibility for performing the disability determination function.

[46 FR 29204, May 29, 1981, as amended at 62 FR 38452, July 18, 1997]

§ 404.1692 Protection of State employees.

(a) *Hiring preference.* We will develop and initiate procedures to implement a plan to partially or completely assume the disability determination function from the State agency under § 404.1690 or § 404.1691, as appropriate. Except for the State agency's administrator, deputy administrator, or assistant administrator (or his equivalent), we will give employees of the State agency who are capable of performing duties in the disability determination function preference over any other persons in filling positions with us for which they are qualified. We may also give a preference in hiring to the State agency's administrator, deputy administrator, or assistant administrator (or his equivalent). We will establish a system for determining the hiring priority among the affected State agency employees in those instances where we are not hiring all of them.

(b) *Determination by Secretary of Labor.* We will not assume responsibility for performing the disability determination function from a State until the Secretary of Labor determines that the State has made fair and equitable arrangements under applicable Federal, State and local law to protect the interests of employees who will be displaced from their employment because of the assumption and who we will not hire.

§ 404.1693 Limitation on State expenditures after notice.

The State agency may not, after it receives the notice referred to in § 404.1690, or gives the notice referred to in § 404.1691, make any new commitments to spend funds allocated to it for performing the disability determination function without the approval of the appropriate SSA regional commissioner. The State will make every effort to close out as soon as possible all existing commitments that relate to performing the disability determination function.

§ 404.1694 Final accounting by the State.

The State will submit its final claims to us as soon as possible, but in no

event later than 1 year from the effective date of our assumption of the disability determination function unless we grant an extension of time. When the final claim(s) is submitted, a final accounting will be made by the State of any funds paid to the State under § 404.1626 which have not been spent or committed prior to the effective date of our assumption of the disability determination function. Disputes concerning final accounting issues which cannot be resolved between the State and us will be resolved in proceedings before the Departmental Appeals Board as described in 45 CFR part 16.

[46 FR 29204, May 29, 1981, as amended at 62 FR 38452, July 18, 1997]

Subpart R—Representation of Parties

AUTHORITY: Secs. 205(a), 206, 702(a)(5), and 1127 of the Social Security Act (42 U.S.C. 405(a), 406, 902(a)(5), and 1320a–6).

SOURCE: 45 FR 52090, Aug. 5, 1980, unless otherwise noted.

§ 404.1700 Introduction.

You may appoint someone to represent you in any of your dealings with us. This subpart explains, among other things—

(a) Who may be your representative and what his or her qualifications must be;

(b) How you appoint a representative;

(c) The payment of fees to a representative;

(d) Our rules that representatives must follow; and

(e) What happens to a representative who breaks the rules.

§ 404.1703 Definitions.

As used in this subpart—

Date we notify him or her means 5 days after the date on the notice, unless the recipient shows us that he or she did not receive it within the 5-day period.

Eligible non-attorney means a non-attorney representative who we determine is qualified to receive direct payment of his or her fee under § 404.1717(a).

Entity means any business, firm, or other association, including but not limited to partnerships, corporations, for-profit organizations, and not-for-profit organizations.

Federal agency refers to any authority of the Executive branch of the Government of the United States.

Federal program refers to any program established by an Act of Congress or administered in whole or in part by a Federal agency.

Legal guardian or court-appointed representative means a court-appointed person, committee, or conservator who is responsible for taking care of and managing the property and rights of an individual who is considered incapable of managing his or her own affairs.

Past-due benefits means the total amount of benefits under title II of the Act that has accumulated to all beneficiaries because of a favorable administrative or judicial determination or decision, up to but not including the month the determination or decision is made. For purposes of calculating fees for representation, we determine past-due benefits before any applicable reduction under section 1127 of the Act (for receipt of benefits for the same period under title XVI). Past-due benefits do not include:

(1) Continued benefits paid pursuant to § 404.1597a of this part; or

(2) Interim benefits paid pursuant to section 223(h) of the Act.

Representational services means services performed for a claimant in connection with any claim the claimant has before us, any asserted right the claimant may have for an initial or reconsidered determination, and any decision or action by an administrative law judge or the Appeals Council.

Representative means an attorney who meets all of the requirements of § 404.1705(a), or a person other than an attorney who meets all of the requirements of § 404.1705(b), and whom you appoint to represent you in dealings with us.

We, *our*, or *us* refers to the Social Security Administration.

You or *your* refers to any person claiming a right under the old-age, disability, dependents', or survivors' benefits program.

[45 FR 52090, Aug. 5, 1980, as amended at 72 FR 16724, Apr. 5, 2007; 74 FR 48384, Sept. 23, 2009; 76 FR 45192, July 28, 2011; 76 FR 80245, Dec. 23, 2011]

§404.1705 Who may be your representative.

(a) You may appoint as your representative in dealings with us, any attorney in good standing who—

(1) Has the right to practice law before a court of a State, Territory, District, or island possession of the United States, or before the Supreme Court or a lower Federal court of the United States;

(2) Is not disqualified or suspended from acting as a representative in dealings with us; and

(3) Is not prohibited by any law from acting as a representative.

(b) You may appoint any person who is not an attorney to be your representative in dealings with us if the person—

(1) Is generally known to have a good character and reputation;

(2) Is capable of giving valuable help to you in connection with your claim;

(3) Is not disqualified or suspended from acting as a representative in dealings with us; and

(4) Is not prohibited by any law from acting as a representative.

(c) We may refuse to recognize the person you choose to represent you if the person does not meet the requirements in this section. We will notify you and the person you attempted to appoint as your representative if we do not recognize the person as a representative.

[45 FR 52090, Aug. 5, 1980, as amended at 76 FR 80245, Dec. 23, 2011]

§404.1706 Notification of options for obtaining attorney representation.

If you are not represented by an attorney and we make a determination or decision that is subject to the administrative review process provided under subpart J of this part and it does not grant all of the benefits or other relief you requested or it adversely affects any entitlement to benefits that we have established or may establish for you, we will include with the notice of that determination or decision information about your options for obtaining an attorney to represent you in dealing with us. We will also tell you that a legal services organization may provide you with legal representation free of charge if you satisfy the qualifying requirements applicable to that organization.

[58 FR 64886, Dec. 10, 1993]

§404.1707 Appointing a representative.

We will recognize a person as your representative if the following things are done:

(a) You sign a written notice stating that you want the person to be your representative in dealings with us.

(b) That person signs the notice, agreeing to be your representative, if the person is not an attorney. An attorney does not have to sign a notice of appointment.

(c) The notice is filed at one of our offices if you have initially filed a claim or have requested reconsideration; with an administrative law judge if you requested a hearing; or with the Appeals Council if you have requested a review of the administrative law judge's decision.

§404.1710 Authority of a representative.

(a) *What a representative may do*. Your representative may, on your behalf—

(1) Obtain information about your claim to the same extent that you are able to do;

(2) Submit evidence;

(3) Make statements about facts and law; and

(4) Make any request or give any notice about the proceedings before us.

(b) *What a representative may not do*. A representative may not sign an application on behalf of a claimant for rights or benefits under title II of the Act unless authorized to do so under §404.612.

§404.1713 Mandatory use of electronic services.

A representative must conduct business with us electronically at the times and in the manner we prescribe on matters for which the representative requests direct fee payment. (*See* §404.1740(b)(4)).

[76 FR 56109, Sept. 12, 2011]

§404.1715 Notice or request to a representative.

(a) We shall send your representative—

(1) Notice and a copy of any administrative action, determination, or decision; and

(2) Requests for information or evidence.

(b) A notice or request sent to your representative, will have the same force and effect as if it had been sent to you.

§ 404.1717 Direct payment of fees to eligible non-attorney representatives.

(a) *Criteria for eligibility*. An individual who is a licensed attorney or who is suspended or disbarred from the practice of law in any jurisdiction may not be an eligible non-attorney. A non-attorney representative is eligible to receive direct payment of his or her fee out of your past-due benefits if he or she:

(1) Completes and submits to us an application as described in paragraph (b) of this section;

(2) Pays the application fee as described in paragraph (c) of this section;

(3) Demonstrates that he or she possesses:

(i) A bachelor's degree from an accredited institution of higher learning; or

(ii) At least four years of relevant professional experience and either a high school diploma or a General Educational Development certificate;

(4) Passes our criminal background investigation (including checks of our administrative records), and attests under penalty of perjury that he or she:

(i) Has not been suspended or disqualified from practice before us and is not suspended or disbarred from the practice of law in any jurisdiction;

(ii) Has not had a judgment or lien assessed against him or her by a civil court for malpractice or fraud;

(iii) Has not had a felony conviction; and

(iv) Has not misrepresented information provided on his or her application or supporting materials for the application;

(5) Takes and passes a written examination we administer;

(6) Provides proof of and maintains continuous liability insurance coverage that is underwritten by an entity that is legally permitted to provide professional liability insurance in the States in which the representative conducts business. The policy must include coverage for malpractice claims against the representative and be in an amount we prescribe; and

(7) Completes and provides proof that he or she has completed all continuing education courses that we prescribe by the deadline we prescribe.

(b) *Application*. An applicant must timely submit his or her completed application form during an application period that we prescribe. The application must be postmarked by the last day of the application period. If an applicant timely submits the application fee and a defective application, we will give the applicant 10 calendar days after the date we notify him or her of the defect to correct the application.

(c) *Application fee*. An applicant must timely submit his or her application fee during the application period. We will set the fee annually.

(1) We will refund the fee if:

(i) We do not administer an examination, and an applicant was unable to take the rescheduled examination; or

(ii) Circumstances beyond the applicant's control that could not have been reasonably anticipated and planned for prevent an applicant from taking a scheduled examination.

(2) We will not refund the fee if:

(i) An applicant took and failed the examination; or

(ii) An applicant failed to arrive on time for the examination because of circumstances within the applicant's control that could have been anticipated and planned for.

(d) *Protest procedures*. (1) We may find that a non-attorney representative is ineligible to receive direct fee payment at any time because he or she fails to meet any of the criteria in paragraph (a) of this section. A non-attorney representative whom we find to be ineligible for direct fee payment may protest our finding only if we based it on the representative's failure to:

(i) Attest on the application or provide sufficient documentation that he or she possesses the required education or equivalent qualifications, as described in paragraph (a)(3) of this section;

(ii) Meet at all times the criminal background investigation criteria, as

described in paragraph (a)(4) of this section;

(iii) Provide proof that he or she has maintained continuous liability insurance coverage, as described in paragraph (a)(6) of this section, after we previously determined the representative was eligible to receive direct fee payment; or

(iv) Complete continuing education courses or provide documentation of the required continuing education courses, as described in paragraph (a)(7) of this section.

(2) A non-attorney representative who wants to protest our finding under paragraph (d)(1) of this section must file a protest in writing and provide all relevant supporting documentation to us within 10 calendar days after the date we notify him or her of our finding.

(3) A representative may not file a protest for reasons other than those listed in paragraph (d)(1) of this section. If a representative files a protest for reasons other than those listed in paragraph (d)(1) of this section, we will not process the protest and will implement our finding as if no protest had been filed. Our finding in response to the protest is final and not subject to further review.

(e) *Ineligibility and suspension.* (1) If an applicant does not protest, in accordance with paragraph (d)(2) of this section, our finding about the criteria in paragraphs (a)(3) or (a)(4) of this section, the applicant will be either ineligible to take the written examination for which he or she applied or ineligible to receive direct fee payment if the applicant already took and passed the examination prior to our finding. If an applicant protests in accordance with paragraph (d)(2) of this section and we uphold our finding, the applicant will be either ineligible to take the written examination for which he or she applied or ineligible to receive direct fee payment if the applicant already took and passed the examination prior to our finding.

(2) If an eligible non-attorney representative does not protest, in accordance with paragraph (d)(2) of this section, our finding about the criteria in paragraphs (a)(3) or (a)(4) of this section, the non-attorney representative will be ineligible to receive direct fee payment beginning with the month after the month the protest period ends. If the eligible non-attorney representative protests in accordance with paragraph (d)(2) of this section and we uphold our finding, the non-attorney representative will be ineligible to receive direct fee payment beginning with the month after the month we uphold our finding.

(3) If an eligible non-attorney representative does not protest, in accordance with paragraph (d)(2) of this section, our finding about the criteria in paragraph (a)(6) of this section, the non-attorney representative will be ineligible to receive direct fee payment for 6 full calendar months beginning with the month after the month the protest period ends. If the eligible non-attorney representative protests in accordance with paragraph (d)(2) of this section and we uphold our finding, the non-attorney representative will be ineligible to receive direct fee payment for 6 full calendar months beginning with the month after the month we uphold our finding. In either case, the non-attorney representative may provide us with documentation that he or she has acquired and maintains the required liability insurance coverage described in paragraph (a)(6) of this section, no earlier than the sixth month of the ineligibility. The non-attorney representative will again be eligible to receive direct fee payment beginning in the first month after the month we find that we have received sufficient documentation that the non-attorney representative meets the requirements of paragraph (a)(6) of this section.

(4) If an eligible non-attorney representative does not protest, in accordance with paragraph (d)(2) of this section, our finding about the criteria in paragraph (a)(7) of this section, the non-attorney representative will be ineligible to receive direct fee payment for 6 full calendar months beginning with the month after the month the protest period ends. If the eligible non-attorney representative protests in accordance with paragraph (d)(2) of this section and we uphold our finding, the non-attorney will be ineligible to receive direct fee payment for 6 full calendar months beginning with the

month after the month we uphold our finding. In either case, the non-attorney representative may provide us with documentation that he or she has satisfied the criteria in paragraph (a)(7) of this section at any time. The non-attorney representative will again be eligible to receive direct fee payment beginning in the first month after the month we find that we have received sufficient documentation, but not earlier than the month following the end of the 6 month ineligibility period.

(f) *Reapplying*. A representative may reapply to become eligible to receive direct fee payment under paragraph (a) of this section during any subsequent application period if he or she:

(1) Did not meet the initial criteria for eligibility in paragraphs (a)(1), (a)(2), (a)(3), or (a)(5) of this section in a prior application period; or

(2) Failed to timely correct a defective application in a prior application period, as described in paragraph (b) of this section.

[76 FR 45192, July 28, 2011, as amended at 80 FR 400, Jan. 6, 2015]

§ 404.1720 Fee for a representative's services.

(a) *General*. A representative may charge and receive a fee for his or her services as a representative only as provided in paragraph (b) of this section.

(b) *Charging and receiving a fee*. (1) The representative must file a written request with us before he or she may charge or receive a fee for his or her services.

(2) We decide the amount of the fee, if any, a representative may charge or receive.

(3) Subject to paragraph (e) of this section, a representative must not charge or receive any fee unless we have authorized it, and a representative must not charge or receive any fee that is more than the amount we authorize.

(4) If your representative is an attorney or an eligible non-attorney, and you are entitled to past-due benefits, we will pay the authorized fee, or a part of the authorized fee, directly to the attorney or eligible non-attorney out of the past-due benefits, subject to the limitations described in § 404.1730(b)(1). If the representative is a non-attorney who is ineligible to receive direct fee payment, we assume no responsibility for the payment of any fee that we have authorized.

(c) *Notice of fee determination*. We shall mail to both you and your representative at your last known address a written notice of what we decide about the fee. We shall state in the notice—

(1) The amount of the fee that is authorized;

(2) How we made that decision;

(3) Whether we are responsible for paying the fee from past-due benefits; and

(4) That within 30 days of the date of the notice, either you or your representative may request us to review the fee determination.

(d) *Review of fee determination*—(1) *Request filed on time*. We will review the decision we made about a fee if either you or your representative files a written request for the review at one of our offices within 30 days after the date of the notice of the fee determination. Either you or your representative, whoever requests the review, shall mail a copy of the request to the other person. An authorized official of the Social Security Administration who did not take part in the fee determination being questioned will review the determination. This determination is not subject to further review. The official shall mail a written notice of the decision made on review both to you and to your representative at your last known address.

(2) *Request not filed on time*. (i) If you or your representative requests a review of the decision we made about a fee, but does so more than 30 days after the date of the notice of the fee determination, whoever makes the request shall state in writing why it was not filed within the 30-day period. We will review the determination if we decide that there was good cause for not filing the request on time.

(ii) Some examples of good cause follow:

(A) Either you or your representative was seriously ill and the illness prevented you or your representative from contacting us in person or in writing.

(B) There was a death or serious illness in your family or in the family of your representative.

(C) Material records were destroyed by fire or other accidental cause.

(D) We gave you or your representative incorrect or incomplete information about the right to request review.

(E) You or your representative did not timely receive notice of the fee determination.

(F) You or your representative sent the request to another government agency in good faith within the 30-day period, and the request did not reach us until after the period had ended.

(3) *Payment of fees.* We assume no responsibility for the payment of a fee based on a revised determination if the request for administrative review was not filed on time.

(e) *When we do not need to authorize a fee.* We do not need to authorize a fee when:

(1) An entity or a Federal, State, county, or city government agency pays from its funds the representative fees and expenses and both of the following conditions apply:

(i) You and your auxiliary beneficiaries, if any, are not liable to pay a fee or any expenses, or any part thereof, directly or indirectly, to the representative or someone else; and

(ii) The representative submits to us a writing in the form and manner that we prescribe waiving the right to charge and collect a fee and any expenses from you and your auxiliary beneficiaries, if any, directly or indirectly, in whole or in part; or

(2) A court authorizes a fee for your representative based on the representative's actions as your legal guardian or a court-appointed representative.

[45 FR 52090, Aug. 5, 1980, as amended at 72 FR 16724, Apr. 5, 2007; 74 FR 48384, Sept. 23, 2009; 76 FR 45193, July 28, 2011]

§ 404.1725 Request for approval of a fee.

(a) *Filing a request.* In order for your representative to obtain approval of a fee for services he or she performed in dealings with us, he or she shall file a written request with one of our offices. This should be done after the proceedings in which he or she was a representative are completed. The request must contain—

(1) The dates the representative's services began and ended;

(2) A list of the services he or she gave and the amount of time he or she spent on each type of service;

(3) The amount of the fee he or she wants to charge for the services;

(4) The amount of fee the representative wants to request or charge for his or her services in the same matter before any State or Federal court;

(5) The amount of and a list of any expenses the representative incurred for which he or she has been paid or expects to be paid;

(6) A description of the special qualifications which enabled the representative, if he or she is not an attorney, to give valuable help in connection with your claim; and

(7) A statement showing that the representative sent a copy of the request for approval of a fee to you.

(b) *Evaluating a request for approval of a fee.* (1) When we evaluate a representative's request for approval of a fee, we consider the purpose of the social security program, which is to provide a measure of economic security for the beneficiaries of the program, together with—

(i) The extent and type of services the representative performed;

(ii) The complexity of the case;

(iii) The level of skill and competence required of the representative in giving the services;

(iv) The amount of time the representative spent on the case;

(v) The results the representative achieved;

(vi) The level of review to which the claim was taken and the level of the review at which the representative became your representative; and

(vii) The amount of fee the representative requests for his or her services, including any amount authorized or requested before, but not including the amount of any expenses he or she incurred.

(2) Although we consider the amount of benefits, if any, that are payable, we do not base the amount of fee we authorize on the amount of the benefit alone, but on a consideration of all the

factors listed in this section. The benefits payable in any claim are determined by specific provisions of law and are unrelated to the efforts of the representative. We may authorize a fee even if no benefits are payable.

§ 404.1728 Proceedings before a State or Federal court.

(a) *Representation of a party in court proceedings.* We shall not consider any service the representative gave you in any proceeding before a State or Federal court to be services as a representative in dealings with us. However, if the representative also has given service to you in the same connection in any dealings with us, he or she must specify what, if any, portion of the fee he or she wants to charge is for services performed in dealings with us. If the representative charges any fee for those services, he or she must file the request and furnish all of the information required by § 404.1725.

(b) *Attorney fee allowed by a Federal court.* If a Federal court in any proceeding under title II of the Act makes a judgment in favor of a claimant who was represented before the court by an attorney, and the court, under section 206(b) of the Act, allows to the attorney as part of its judgment a fee not in excess of 25 percent of the total of past-due benefits to which the claimant is entitled by reason of the judgment, we may pay the attorney the amount of the fee out of, but not in addition to, the amount of the past-due benefits payable. We will not certify for direct payment any other fee your representative may request.

§ 404.1730 Payment of fees.

(a) *Fees allowed by a Federal court.* We will pay an attorney representative out of your past-due benefits the amount of the fee allowed by a Federal court in a proceeding under title II of the Act. The payment we make to the attorney is subject to the limitations described in paragraph (b)(1) of this section.

(b) *Fees we may authorize*—(1) *Attorneys and eligible non-attorneys.* Except as provided in paragraph (c) of this section, if we make a determination or decision in your favor and you were represented by an attorney or an eligible non-attorney, and as a result of the determination or decision you have past-due benefits, we will pay the representative out of the past-due benefits, the smaller of the amounts in paragraph (b)(1)(i) or (ii) of this section, less the amount of the assessment described in paragraph (d) of this section.

(i) Twenty-five percent of the total of the past-due benefits; or

(ii) The amount of the fee that we set.

(2) *Non-attorneys ineligible for direct payment.* If the representative is a non-attorney who is ineligible to receive direct payment of his or her fee, we assume no responsibility for the payment of any fee that we authorized. We will not deduct the fee from your past-due benefits.

(c) *Time limit for filing request for approval of fee to obtain direct payment.* (1) To receive direct fee payment from your past-due benefits, a representative who is an attorney or an eligible non-attorney should file a request for approval of a fee, or written notice of the intent to file a request, at one of our offices, or electronically at the times and in the manner that we prescribe if we give notice that such a method is available, within 60 days of the date we mail the notice of the favorable determination or decision.

(2)(i) If no request is filed within 60 days of the date the notice of the favorable determination is mailed, we will mail a written notice to you and your representative at your last known addresses. The notice will inform you and the representative that unless the representative files, within 20 days from the date of the notice, a written request for approval of a fee under § 404.1725, or a written request for an extension of time, we will pay all the past-due benefits to you.

(ii) The representative must send you a copy of any request made to us for an extension of time. If the request is not filed within 20 days of the date of the notice, or by the last day of any extension we approved, we will pay all past-due benefits to you. We must approve any fee the representative charges after that time, but the collection of any approved fee is a matter between you and the representative.

(d) *Assessment when we pay a fee directly to a representative.* (1) Whenever

we pay a fee directly to a representative from past-due benefits, we impose an assessment on the representative.

(2) The amount of the assessment is equal to the lesser of:

(i) The product we obtain by multiplying the amount of the fee we are paying to the representative by the percentage rate the Commissioner of Social Security determines is necessary to achieve full recovery of the costs of determining and paying fees directly to representatives, but not in excess of 6.3 percent; and

(ii) The maximum assessment amount. The maximum assessment amount was initially set at $75, but by law is adjusted annually to reflect the increase in the cost of living. (See §§ 404.270 through 404.277 for an explanation of how the cost-of-living adjustment is computed.) If the adjusted amount is not a multiple of $1, we round down the amount to the next lower $1, but the amount will not be less than $75. We will announce any increase in the maximum assessment amount and explain how the increase was determined in the FEDERAL REGISTER.

(3) We collect the assessment by subtracting it from the amount of the fee to be paid to the representative. The representative who is subject to an assessment may not, directly or indirectly, request or otherwise obtain reimbursement of the assessment from you.

[72 FR 16724, Apr. 5, 2007, as amended at 76 FR 45193, July 28, 2011]

§ 404.1735 [Reserved]

§ 404.1740 Rules of conduct and standards of responsibility for representatives.

(a) *Purpose and scope.* (1) All attorneys or other persons acting on behalf of a party seeking a statutory right or benefit must, in their dealings with us, faithfully execute their duties as agents and fiduciaries of a party. A representative must provide competent assistance to the claimant and recognize our authority to lawfully administer the process. The following provisions set forth certain affirmative duties and prohibited actions that will govern the relationship between the representative and us, including matters involving our administrative procedures and fee collections.

(2) All representatives must be forthright in their dealings with us and with the claimant and must comport themselves with due regard for the nonadversarial nature of the proceedings by complying with our rules and standards, which are intended to ensure orderly and fair presentation of evidence and argument.

(b) *Affirmative duties.* A representative must, in conformity with the regulations setting forth our existing duties and responsibilities and those of claimants (see § 404.1512 in disability and blindness claims):

(1) Act with reasonable promptness to obtain the information and evidence that the claimant wants to submit in support of his or her claim, and forward the same to us for consideration as soon as practicable. In disability and blindness claims, this includes the obligations to assist the claimant in bringing to our attention everything that shows that the claimant is disabled or blind, and to assist the claimant in furnishing medical evidence that the claimant intends to personally provide and other evidence that we can use to reach conclusions about the claimant's medical impairment(s) and, if material to the determination of whether the claimant is blind or disabled, its effect upon the claimant's ability to work on a sustained basis, pursuant to § 404.1512(a);

(2) Assist the claimant in complying, as soon as practicable, with our requests for information or evidence at any stage of the administrative decisionmaking process in his or her claim. In disability and blindness claims, this includes the obligation pursuant to § 404.1512(c) to assist the claimant in providing, upon our request, evidence about:

(i) The claimant's age;

(ii) The claimant's education and training;

(iii) The claimant's work experience;

(iv) The claimant's daily activities both before and after the date the claimant alleges that he or she became disabled;

(v) The claimant's efforts to work; and

(vi) Any other factors showing how the claimant's impairment(s) affects his or her ability to work. In §§ 404.1560 through 404.1569, we discuss in more detail the evidence we need when we consider vocational factors;

(3) Conduct his or her dealings in a manner that furthers the efficient, fair and orderly conduct of the administrative decisionmaking process, including duties to:

(i) Provide competent representation to a claimant. Competent representation requires the knowledge, skill, thoroughness and preparation reasonably necessary for the representation. This includes knowing the significant issue(s) in a claim and having a working knowledge of the applicable provisions of the Social Security Act, as amended, the regulations and the Rulings; and

(ii) Act with reasonable diligence and promptness in representing a claimant. This includes providing prompt and responsive answers to our requests for information pertinent to processing of the claim; and

(4) Conduct business with us electronically at the times and in the manner we prescribe on matters for which the representative requests direct fee payment. (*See* § 404.1713).

(c) *Prohibited actions.* A representative must not:

(1) In any manner or by any means threaten, coerce, intimidate, deceive or knowingly mislead a claimant, or prospective claimant or beneficiary, regarding benefits or other rights under the Act;

(2) Knowingly charge, collect or retain, or make any arrangement to charge, collect or retain, from any source, directly or indirectly, any fee for representational services in violation of applicable law or regulation;

(3) Knowingly make or present, or participate in the making or presentation of, false or misleading oral or written statements, assertions or representations about a material fact or law concerning a matter within our jurisdiction;

(4) Through his or her own actions or omissions, unreasonably delay or cause to be delayed, without good cause (see § 404.911(b)), the processing of a claim at any stage of the administrative decisionmaking process;

(5) Divulge, without the claimant's consent, except as may be authorized by regulations prescribed by us or as otherwise provided by Federal law, any information we furnish or disclose about a claim or prospective claim;

(6) Attempt to influence, directly or indirectly, the outcome of a decision, determination, or other administrative action by offering or granting a loan, gift, entertainment, or anything of value to a presiding official, agency employee, or witness who is or may reasonably be expected to be involved in the administrative decisionmaking process, except as reimbursement for legitimately incurred expenses or lawful compensation for the services of an expert witness retained on a non-contingency basis to provide evidence;

(7) Engage in actions or behavior prejudicial to the fair and orderly conduct of administrative proceedings, including but not limited to:

(i) Repeated absences from or persistent tardiness at scheduled proceedings without good cause (see § 404.911(b));

(ii) Willful behavior which has the effect of improperly disrupting proceedings or obstructing the adjudicative process; and

(iii) Threatening or intimidating language, gestures, or actions directed at a presiding official, witness, or agency employee that result in a disruption of the orderly presentation and reception of evidence;

(8) Violate any section of the Act for which a criminal or civil monetary penalty is prescribed;

(9) Refuse to comply with any of our rules or regulations;

(10) Suggest, assist, or direct another person to violate our rules or regulations;

(11) Advise any claimant or beneficiary not to comply with any of our rules or regulations;

(12) Knowingly assist a person whom we suspended or disqualified to provide representational services in a proceeding under title II of the Act, or to exercise the authority of a representative described in § 404.1710; or

(13) Fail to comply with our sanction(s) decision.

[63 FR 41416, Aug. 4, 1998, as amended at 76 FR 56109, Sept. 12, 2011; 76 FR 80245, Dec. 23, 2011]

EFFECTIVE DATE NOTE: At 80 FR 14837, Mar. 20, 2015, § 404.1740 was amended by revising paragraphs (b)(1) and (b)(2)(i) through (vi) and adding paragraph (b)(2)(vii), effective Apr. 20, 2015. For the convenience of the user, the added and revised text is set forth as follows:

§ 404.1740 Rules of conduct and standards of responsibility for representatives.

* * * * *

(b) * * *

(1) Act with reasonable promptness to help obtain the information or evidence that the claimant must submit under our regulations, and forward the information or evidence to us for consideration as soon as practicable.

(2) * * *

(i) The claimant's medical source(s);

(ii) The claimant's age;

(iii) The claimant's education and training;

(iv) The claimant's work experience;

(v) The claimant's daily activities both before and after the date the claimant alleges that he or she became disabled;

(vi) The claimant's efforts to work; and

(vii) Any other factors showing how the claimant's impairment(s) affects his or her ability to work. In §§ 404.1560 through 404.1569a, we discuss in more detail the evidence we need when we consider vocational factors;

* * * * *

§ 404.1745 Violations of our requirements, rules, or standards.

When we have evidence that a representative fails to meet our qualification requirements or has violated the rules governing dealings with us, we may begin proceedings to suspend or disqualify that individual from acting in a representational capacity before us. We may file charges seeking such sanctions when we have evidence that a representative:

(a) Does not meet the qualifying requirements described in § 404.1705;

(b) Has violated the affirmative duties or engaged in the prohibited actions set forth in § 404.1740;

(c) Has been convicted of a violation under section 206 of the Act;

(d) Has been, by reason of misconduct, disbarred or suspended from any bar or court to which he or she was previously admitted to practice (see § 404.1770(a)); or

(e) Has been, by reason of misconduct, disqualified from participating in or appearing before any Federal program or agency (see § 404.1770(a)).

[63 FR 41416, Aug. 4, 1998, as amended at 71 FR 2876, Jan. 18, 2006]

§ 404.1750 Notice of charges against a representative.

(a) The General Counsel or other delegated official will prepare a notice containing a statement of charges that constitutes the basis for the proceeding against the representative.

(b) We will send this notice to the representative either by certified or registered mail, to his or her last known address, or by personal delivery.

(c) We will advise the representative to file an answer, within 30 days from the date of the notice, or from the date the notice was delivered personally, stating why he or she should not be suspended or disqualified from acting as a representative in dealings with us.

(d) The General Counsel or other delegated official may extend the 30-day period for good cause in accordance with § 404.911.

(e) The representative must—

(1) Answer the notice in writing under oath (or affirmation); and

(2) File the answer with the Social Security Administration, at the address specified on the notice, within the 30-day time period.

(f) If the representative does not file an answer within the 30-day time period, he or she does not have the right to present evidence, except as may be provided in § 404.1765(g).

[45 FR 52090, Aug. 5, 1980, as amended at 56 FR 24131, May 29, 1991; 62 FR 38452, July 18, 1997; 63 FR 41417, Aug. 4, 1998; 71 FR 2876, Jan. 18, 2006; 76 FR 80246, Dec. 23, 2011]

§ 404.1755 Withdrawing charges against a representative.

The General Counsel or other delegated official may withdraw charges against a representative. We will withdraw charges if the representative files an answer, or we obtain evidence, that

satisfies us that we should not suspend or disqualify the representative from acting as a representative. When we consider withdrawing charges brought under § 404.1745(d) or (e) based on the representative's assertion that, before or after our filing of charges, the representative has been reinstated to practice by the court, bar, or Federal program or Federal agency that suspended, disbarred, or disqualified the representative, the General Counsel or other delegated official will determine whether such reinstatement occurred, whether it remains in effect, and whether he or she is reasonably satisfied that the representative will in the future act in accordance with the provisions of section 206(a) of the Act and our rules and regulations. If the representative proves that reinstatement occurred and remains in effect and the General Counsel or other delegated official is so satisfied, the General Counsel or other delegated official will withdraw those charges. The action of the General Counsel or other delegated official regarding withdrawal of charges is solely that of the General Counsel or other delegated official and is not reviewable, or subject to consideration in decisions made under §§ 404.1770 and 404.1790. If we withdraw the charges, we will notify the representative by mail at the representative's last known address.

[76 FR 80246, Dec. 23, 2011]

§ 404.1765 Hearing on charges.

(a) *Holding the hearing.* If the General Counsel or other delegated official does not take action to withdraw the charges within 15 days after the date on which the representative filed an answer, we will hold a hearing and make a decision on the charges.

(b) *Hearing officer.* (1) The Deputy Commissioner for Disability Adjudication and Review or other delegated official will assign an administrative law judge, designated to act as a hearing officer, to hold a hearing on the charges.

(2) No hearing officer shall hold a hearing in a case in which he or she is prejudiced or partial about any party, or has any interest in the matter.

(3) If the representative or any party to the hearing objects to the hearing officer who has been named to hold the hearing, we must be notified at the earliest opportunity. The hearing officer shall consider the objection(s) and either proceed with the hearing or withdraw from it.

(4) If the hearing officer withdraws from the hearing, another one will be named.

(5) If the hearing officer does not withdraw, the representative or any other person objecting may, after the hearing, present his or her objections to the Appeals Council explaining why he or she believes the hearing officer's decision should be revised or a new hearing held by another administrative law judge designated to act as a hearing officer.

(c) *Time and place of hearing.* The hearing officer shall mail the parties a written notice of the hearing at their last known addresses, at least 20 days before the date set for the hearing.

(d) *Change of time and place for hearing.* (1) The hearing officer may change the time and place for the hearing. This may be done either on his or her own initiative, or at the request of the representative or the other party to the hearing.

(2) The hearing officer may adjourn or postpone the hearing.

(3) The hearing officer may reopen the hearing for the receipt of additional evidence at any time before mailing notice of the decision.

(4) The hearing officer shall give the representative and the other party to the hearing reasonable notice of any change in the time or place for the hearing, or of an adjournment or reopening of the hearing.

(e) *Parties.* The representative against whom charges have been made is a party to the hearing. The General Counsel or other delegated official will also be a party to the hearing.

(f) *Subpoenas.* (1) The representative or the other party to the hearing may request the hearing officer to issue a subpoena for the attendance and testimony of witnesses and for the production of books, records, correspondence, papers, or other documents that are material to any matter being considered at the hearing. The hearing officer may, on his or her own initiative, issue subpoenas for the same purposes when

the action is reasonably necessary for the full presentation of the facts.

(2) The representative or the other party who wants a subpoena issued shall file a written request with the hearing officer. This must be done at least 5 days before the date set for the hearing. The request must name the documents to be produced, and describe the address or location in enough detail to permit the witnesses or documents to be found.

(3) The representative or the other party who wants a subpoena issued shall state in the request for a subpoena the material facts that he or she expects to establish by the witness or document, and why the facts could not be established by the use of other evidence which could be obtained without use of a subpoena.

(4) We will pay the cost of the issuance and the fees and mileage of any witness subpoenaed, as provided in section 205(d) of the Act.

(g) *Conduct of the hearing.* (1) The hearing officer shall make the hearing open to the representative, to the other party, and to any persons the hearing officer or the parties consider necessary or proper. The hearing officer shall inquire fully into the matters being considered, hear the testimony of witnesses, and accept any documents that are material.

(2) If the representative did not file an answer to the charges, he or she has no right to present evidence at the hearing. The hearing officer may make or recommend a decision on the basis of the record, or permit the representative to present a statement about the sufficiency of the evidence or the validity of the proceedings upon which the suspension or disqualification, if it occurred, would be based.

(3) If the representative did file an answer to the charges, and if the hearing officer believes that there is material evidence available that was not presented at the hearing, the hearing officer may at any time before mailing notice of the hearing decision reopen the hearing to accept the additional evidence.

(4) The hearing officer has the right to decide the order in which the evidence and the allegations will be presented and the conduct of the hearing.

(h) *Evidence.* The hearing officer may accept evidence at the hearing, even though it is not admissible under the rules of evidence that apply to Federal court procedure.

(i) *Witnesses.* Witnesses who testify at the hearing shall do so under oath or affirmation. Either the representative or a person representing him or her may question the witnesses. The other party and that party's representative must also be allowed to question the witnesses. The hearing officer may also ask questions as considered necessary, and shall rule upon any objection made by either party about whether any question is proper.

(j) *Oral and written summation.* (1) The hearing officer shall give the representative and the other party a reasonable time to present oral summation and to file briefs or other written statements about proposed findings of fact and conclusions of law if the parties request it.

(2) The party that files briefs or other written statements shall provide enough copies so that they may be made available to any other party to the hearing who requests a copy.

(k) *Record of hearing.* In all cases, the hearing officer shall have a complete record of the proceedings at the hearing made.

(l) *Representation.* The representative, as the person charged, may appear in person and may be represented by an attorney or other representative. The General Counsel or other delegated official will be represented by one or more attorneys from the Office of the General Counsel.

(m) *Failure to appear.* If the representative or the other party to the hearing fails to appear after being notified of the time and place, the hearing officer may hold the hearing anyway so that the party present may offer evidence to sustain or rebut the charges. The hearing officer shall give the party who failed to appear an opportunity to show good cause for failure to appear. If the party fails to show good cause, he or she is considered to have waived the right to be present at the hearing. If the party shows good cause, the hearing officer may hold a supplemental hearing.

(n) *Dismissal of charges*. The hearing officer may dismiss the charges in the event of the death of the representative.

(o) *Cost of transcript*. If the representative or the other party to a hearing requests a copy of the transcript of the hearing, the hearing officer will have it prepared and sent to the party upon payment of the cost, unless the payment is waived for good cause.

[45 FR 52090, Aug. 5, 1980, as amended at 56 FR 24131, 24132, May 29, 1991; 62 FR 38452, July 18, 1997; 63 FR 41417, Aug. 4, 1998; 71 FR 2877, Jan. 18, 2006; 76 FR 80246, Dec. 23, 2011]

§ 404.1770 Decision by hearing officer.

(a) *General*. (1) After the close of the hearing, the hearing officer will issue a decision or certify the case to the Appeals Council. The decision must be in writing, will contain findings of fact and conclusions of law, and be based upon the evidence of record.

(2) In deciding whether a person has been, by reason of misconduct, disbarred or suspended by a court or bar, or disqualified from participating in or appearing before any Federal program or Federal agency, the hearing officer will consider the reasons for the disbarment, suspension, or disqualification action. If the action was taken for solely administrative reasons (e.g., failure to pay dues or to complete continuing legal education requirements), that will not disqualify the person from acting as a representative before us. However, this exception to disqualification does not apply if the administrative action was taken in lieu of disciplinary proceedings (e.g., acceptance of a voluntary resignation pending disciplinary action). Although the hearing officer will consider whether the disbarment, suspension, or disqualification action is based on misconduct when deciding whether a person should be disqualified from acting as a representative before us, the hearing officer will not re-examine or revise the factual or legal conclusions that led to the disbarment, suspension, or disqualification. For purposes of determining whether a person has been, by reason of misconduct, disqualified from participating in or appearing before any Federal program or Federal agency, disqualified refers to any action that prohibits a person from participating in or appearing before any Federal program or Federal agency, regardless of how long the prohibition lasts or the specific terminology used.

(3) If the hearing officer finds that the charges against the representative have been sustained, he or she will either—

(i) Suspend the representative for a specified period of not less than 1 year, nor more than 5 years, from the date of the decision; or

(ii) Disqualify the representative from acting as a representative in dealings with us until he or she may be reinstated under § 404.1799. Disqualification is the sole sanction available if the charges have been sustained because the representative has been disbarred or suspended from any court or bar to which the representative was previously admitted to practice or disqualified from participating in or appearing before any Federal program or Federal agency, or because the representative has collected or received, and retains, a fee for representational services in excess of the amount authorized.

(4) The hearing officer shall mail a copy of the decision to the parties at their last known addresses. The notice will inform the parties of the right to request the Appeals Council to review the decision.

(b) *Effect of hearing officer's decision*. (1) The hearing officer's decision is final and binding unless reversed or modified by the Appeals Council upon review.

(2) If the final decision is that a person is disqualified from being a representative in dealings with us, he or she will not be permitted to represent anyone in dealings with us until authorized to do so under the provisions of § 404.1799.

(3) If the final decision is that a person is suspended for a specified period of time from being a representative in dealings with us, he or she will not be

permitted to represent anyone in dealings with us during the period of suspension unless authorized to do so under the provisions of § 404.1799.

[45 FR 52090, Aug. 5, 1980, as amended at 56 FR 24132, May 29, 1991; 63 FR 41417, Aug. 4, 1998; 71 FR 2877, Jan. 18, 2006; 76 FR 80246, Dec. 23, 2011]

§ 404.1775 Requesting review of the hearing officer's decision.

(a) *General.* After the hearing officer issues a decision, either the representative or the other party to the hearing may ask the Appeals Council to review the decision.

(b) *Time and place of filing request for review.* The party requesting review shall file the request for review in writing with the Appeals Council within 30 days from the date the hearing officer mailed the notice. The party requesting review shall certify that a copy of the request for review and of any documents that are submitted have been mailed to the opposing party.

§ 404.1776 Assignment of request for review of the hearing officer's decision.

Upon receipt of a request for review of the hearing officer's decision, the matter will be assigned to a panel consisting of three members of the Appeals Council none of whom shall be the Chair of the Appeals Council. The panel shall jointly consider and rule by majority opinion on the request for review of the hearing officer's decision, including a determination to dismiss the request for review. Matters other than a final disposition of the request for review may be disposed of by the member designated chair of the panel.

[56 FR 24132, May 29, 1991]

§ 404.1780 Appeals Council's review of hearing officer's decision.

(a) Upon request, the Appeals Council shall give the parties a reasonable time to file briefs or other written statements as to fact and law, and to appear before the Appeals Council to present oral argument.

(b) If a party files a brief or other written statement with the Appeals Council, he or she shall send a copy to the opposing party and certify that the copy has been sent.

§ 404.1785 Evidence permitted on review.

(a) *General.* Generally, the Appeals Council will not consider evidence in addition to that introduced at the hearing. However, if the Appeals Council believes that the evidence offered is material to an issue it is considering, the evidence will be considered.

(b) *Individual charged filed an answer.* (1) When the Appeals Council believes that additional material evidence is available, and the representative has filed an answer to the charges, the Appeals Council shall require that the evidence be obtained. The Appeals Council may name an administrative law judge or a member of the Appeals Council to receive the evidence.

(2) Before additional evidence is admitted into the record, the Appeals Council shall mail a notice to the parties, telling them that evidence about certain issues will be obtained, unless the notice is waived. The Appeals Council shall give each party a reasonable opportunity to comment on the evidence and to present other evidence that is material to an issue it is considering.

(c) *Individual charged did not file an answer.* If the representative did not file an answer to the charges, the Appeals Council will not permit the introduction of evidence that was not considered at the hearing.

§ 404.1790 Appeals Council's decision.

(a) The Appeals Council shall base its decision upon the evidence in the hearing record and any other evidence it may permit on review. The Appeals Council shall either—

(1) Affirm, reverse, or modify the hearing officer's decision; or

(2) Return a case to the hearing officer when the Appeals Council considers it appropriate.

(b) The Appeals Council, in changing a hearing officer's decision to suspend a representative for a specified period, shall in no event reduce the period of suspension to less than 1 year. In modifying a hearing officer's decision to disqualify a representative, the Appeals Council shall in no event impose a period of suspension of less than 1 year. Further, the Appeals Council shall in

no event impose a suspension when disqualification is the sole sanction available in accordance with § 404.1770(a)(3)(ii).

(c) If the Appeals Council affirms or changes a hearing officer's decision, the period of suspension or the disqualification is effective from the date of the Appeals Council's decision.

(d) If the hearing officer did not impose a period of suspension or a disqualification, and the Appeals Council decides to impose one or the other, the suspension or disqualification is effective from the date of the Appeals Council's decision.

(e) The Appeals Council shall make its decision in writing and shall mail a copy of the decision to the parties at their last known addresses.

[45 FR 52090, Aug. 5, 1980, as amended at 56 FR 24132, May 29, 1991; 71 FR 2877, Jan. 18, 2006]

§ 404.1795 When the Appeals Council will dismiss a request for review.

The Appeals Council may dismiss a request for the review of any proceeding to suspend or disqualify a representative in any of the following circumstances:

(a) *Upon request of party*. The Appeals Council may dismiss a request for review upon written request of the party or parties who filed the request if there is no other party who objects to the dismissal.

(b) *Death of party*. The Appeals Council may dismiss a request for review in the event of the death of the representative.

(c) *Request for review not timely filed*. The Appeals Council will dismiss a request for review if a party failed to file a request for review within the 30-day time period and the Appeals Council does not extend the time for good cause.

§ 404.1797 Reinstatement after suspension—period of suspension expired.

We shall automatically allow a person to serve again as a representative in dealings with us at the end of any suspension.

§ 404.1799 Reinstatement after suspension or disqualification—period of suspension not expired.

(a) After more than one year has passed, a person who has been suspended or disqualified, may ask the Appeals Council for permission to serve as a representative again.

(b) The suspended or disqualified person must submit any evidence the person wishes to have considered along with the request to be allowed to serve as a representative again.

(c) The General Counsel or other delegated official, upon notification of receipt of the request, will have 30 days in which to present a written report of any experiences with the suspended or disqualified person subsequent to that person's suspension or disqualification. The Appeals Council will make available to the suspended or disqualified person a copy of the report.

(d)(1) The Appeals Council shall not grant the request unless it is reasonably satisfied that the person will in the future act according to the provisions of section 206(a) of the Act, and to our rules and regulations.

(2) If a person was disqualified because he or she had been disbarred or suspended from a court or bar, the Appeals Council will grant a request for reinstatement as a representative only if the criterion in paragraph (d)(1) of this section is met and the disqualified person shows that he or she has been admitted (or readmitted) to and is in good standing with the court or bar from which he or she had been disbarred or suspended.

(3) If a person was disqualified because the person had been disqualified from participating in or appearing before a Federal program or Federal agency, the Appeals Council will grant the request for reinstatement only if the criterion in paragraph (d)(1) of this section is met and the disqualified person shows that the person is now qualified to participate in or appear before that Federal program or Federal agency.

(4) If the person was disqualified as a result of collecting or receiving, and retaining, a fee for representational services in excess of the amount authorized, the Appeals Council will grant the request only if the criterion

in paragraph (d)(1) of this section is met and the disqualified person shows that full restitution has been made.

(e) The Appeals Council will mail a notice of its decision on the request for reinstatement to the suspended or disqualified person. It will also mail a copy to the General Counsel or other delegated official.

(f) If the Appeals Council decides not to grant the request, it shall not consider another request before the end of 1 year from the date of the notice of the previous denial.

[45 FR 52090, Aug. 5, 1980, as amended at 56 FR 24132, May 29, 1991; 62 FR 38452, July 18, 1997; 63 FR 41417, Aug. 4, 1998; 71 FR 2877, Jan. 18, 2006; 76 FR 80246, Dec. 23, 2011]

Subpart S—Payment Procedures

AUTHORITY: Secs. 205 (a) and (n), 207, 702(a)(5), and 708(a) of the Social Security Act (42 U.S.C. 405 (a) and (n), 407, 902(a)(5) and 909(a)).

SOURCE: 45 FR 52095, Aug. 5, 1980, unless otherwise noted.

§404.1800 Introduction.

After we have made a determination or decision that you are entitled to benefits under title II of the Act, we begin paying those benefits to you as soon as possible. This subpart explains—

(a) What we must do so that your benefits begin promptly;

(b) When and how you may request that payment of benefits be expedited;

(c) When we may cause your benefits to be withheld;

(d) Our obligation not to assign or transfer your benefits to someone; and

(e) When we will use one check to pay benefits to two or more persons in a family.

§404.1805 Paying benefits.

(a) As soon as possible after we have made a determination or decision that you are entitled to benefits, we certify to the Secretary of the Treasury, who is the Managing Trustee of the Trust Funds—

(1) Your name and address, or the name and address of the person to be paid if someone receives your benefits on your behalf as a representative payee;

(2) The amount of the payment or payments to be made from the appropriate Trust Fund; and

(3) The time at which the payment or payments should be made in accordance with §404.1807.

(b) Under certain circumstances when you have had railroad employment, we will certify the information to the Railroad Retirement Board.

[45 FR 52095, Aug. 5, 1980, as amended at 62 FR 6120, Feb. 11, 1997]

§404.1807 Monthly payment day.

(a) *General.* Once we have made a determination or decision that you are entitled to recurring monthly benefits, you will be assigned a monthly payment day. Thereafter, any recurring monthly benefits which are payable to you will be certified to the Managing Trustee for delivery on or before that day of the month as part of our certification under §404.1805(a)(3). Except as provided in paragraphs (c)(2) through (c)(6) of this section, once you have been assigned a monthly payment day, that day will not be changed.

(b) *Assignment of payment day.* (1) We will assign the same payment day for all individuals who receive benefits on the earnings record of a particular insured individual.

(2) The payment day will be selected based on the day of the month on which the insured individual was born. Insured individuals born on the 1st through the 10th of the month will be paid on the second Wednesday of each month. Insured individuals born on the 11th through the 20th of the month will be paid on the third Wednesday of each month. Insured individuals born after the 20th of the month will be paid on the fourth Wednesday of each month. See paragraph (c) of this section for exceptions.

(3) We will notify you in writing of the particular monthly payment day that is assigned to you.

(c) *Exceptions.* (1) If you or any other person became entitled to benefits on the earnings record of the insured individual based on an application filed before May 1, 1997, you will continue to receive your benefits on the 3rd day of the month (but see paragraph (c)(6) of this section). All persons who subsequently become entitled to benefits on

that earnings record will be assigned to the 3rd day of the month as the monthly payment day.

(2) If you or any other person become entitled to benefits on the earnings record of the insured individual based on an application filed after April 30, 1997, and also become entitled to Supplemental Security Income (SSI) benefits or have income which is deemed to an SSI beneficiary (per § 416.1160), all persons who are or become entitled to benefits on that earnings record will be assigned to the 3rd day of the month as the monthly payment day. We will notify you in writing if your monthly payment day is being changed to the 3rd of the month due to this provision.

(3) If you or any other person become entitled to benefits on the earnings record of the insured individual based on an application filed after April 30, 1997, and also reside in a foreign country, all persons who are or become entitled to benefits on that earnings record will be assigned to the 3rd day of the month as the monthly payment day. We will notify you in writing if your monthly payment day is being changed to the 3rd of the month due to this provision.

(4) If you or any other person become entitled on the earnings record of the insured individual based on an application filed after April 30, 1997, and are not entitled to SSI but are or become eligible for the State where you live to pay your Medicare premium under the provisions of section 1843 of the Act, all persons who are or become entitled to benefits on that earnings record will be assigned to the 3rd day of the month as the monthly payment day. We will notify you in writing if your monthly payment day is being changed to the 3rd of the month due to this provision.

(5) After April 30, 1997, all individuals who become entitled on one record and later entitled on another record, without a break in entitlement, will be paid all benefits to which they are entitled no later than their current payment day. Individuals who are being paid benefits on one record on the 3rd of the month, and who become entitled on another record without a break in entitlement, will continue to receive all benefits on the 3rd of the month.

(6) If the day regularly scheduled for the delivery of your benefit payment falls on a Saturday, Sunday, or Federal legal holiday, you will be paid on the first preceding day that is not a Saturday, Sunday, or Federal legal holiday.

[62 FR 6120, Feb. 11, 1997]

§ 404.1810 Expediting benefit payments.

(a) *General.* We have established special procedures to expedite the payment of benefits in certain initial and subsequent claims. This section tells how you may request an expedited payment and when we will be able to hasten your payments by means of this process.

(b) *Applicability of section.* (1) This section applies to monthly benefits payable under title II of the Act, except as indicated in paragraph (b)(2) of this section; and to those cases where we certify information to the Railroad Retirement Board.

(2) This section does not apply—

(i) If an initial determination has been made and a request for a reconsideration, a hearing, a review by the Appeals Council, or review by a Federal court is pending on any issue of entitlement to or payment of a benefit;

(ii) To any benefit for which a check has been cashed; or

(iii) To any benefit based on an alleged disability.

(c) *Request for payment.* (1) You shall submit to us a written request for payment of benefits in accordance with paragraph (c)(2) or (c)(3) of this section. Paragraph (c)(2) of this section applies if you were receiving payments regularly and you then fail to receive payment for one or more months. Paragraph (c)(3) of this section applies if we have not made a determination about your entitlement to benefits, or if we have suspended or withheld payment due, for example, to excess earnings or recovery of an overpayment.

(2) If you received a regular monthly benefit in the month before the month in which a payment was allegedly due, you may make a written request for payment any time 30 days after the 15th day of the month in which the payment was allegedly due. If you request is made before the end of the 30-

day period, we will consider it to have been made at the end of the period.

(3)(i) If you did not receive a regular monthly benefit in the month before the month in which a payment was allegedly due, you may make a written request for payment any time 90 days after the later of—

(A) The date on which the benefit is alleged to have been due; or

(B) The date on which you furnished us the last information we requested from you.

(ii) If your request is made before the end of the 90-day period we will consider it to have been made at the end of the period.

(d) *Certification for payment*. If we find that benefits are due, we shall certify the benefits for payment in sufficient time to permit the payment to be made within 15 days after the request for expedited payment is made, or considered to have been made, as provided in paragraph (c) of this section.

(e) *Preliminary certification for payment*. If we determine that there is evidence, although additional evidence may be required for a final decision, that a monthly benefit due to you in a particular month was not paid, we may make preliminary certification of payment even though the 30-day or 90-day periods described in paragraph (c) of this section have not elapsed.

§ 404.1815 Withholding certification or payments.

(a) *When certification may be withheld*. After a determination or decision, we may withhold certification to the Managing Trustee, or, if we have already made certification, we may notify the Managing Trustee to withhold payments. We may do this if a question about the validity of the payment or payments to be made under the determination or decision arises as the result of one of the following events:

(1) A reconsideration (whether at the request of a claimant or on our own motion), hearing, or review is being conducted, or a civil action has been filed in a Federal district court concerning the determination or decision.

(2) An application or request is pending concerning the payment of benefits or a lump sum to another person, and the application or request is inconsistent, in whole or in part, with the payment or payments under the determination or decision.

(b) *When certification will not be withheld*. We will not withhold certification or payment as explained in paragraph (a) of this section unless evidence is submitted with the request or application that is sufficient to raise a reasonable question about the validity of the payment or payments under the determination or decision. We will not withhold certification of any amount of the payment or payments not in question. Your acceptance of any payment or payments will not affect your right to reconsideration, hearing, or review about any additional payment or payments you may claim.

§ 404.1820 Transfer or assignment of payments.

(a) *General*. We shall not certify payment to—

(1) Any person designated as your assignee or transferee; or

(2) Any person claiming payment because of an execution, levy, attachment, garnishment, or other legal process, or because of any bankruptcy or insolvency proceeding against or affecting you.

(b) *Enforcement of a child support or alimony obligation*. If you have a legal obligation to provide child support or make alimony payments and legal process is issued to enforce this obligation, the provisions of paragraph (a) of this section do not apply.

§ 404.1821 Garnishment of payments after disbursement.

(a) Payments that are covered by section 207 of the Social Security Act and made by direct deposit are subject to 31 CFR part 212, Garnishment of Accounts Containing Federal Benefit Payments.

(b) This section may be amended only by a rulemaking issued jointly by the Department of Treasury and the agencies defined as a ''benefit agency'' in 31 CFR 212.3.

[76 FR 9960, Feb. 23, 2011]

§ 404.1825 Joint payments to a family.

(a) *Two or more beneficiaries in same family*. If an amount is payable under title II of the Act for any month to two or more persons who are members of

the same family, we may certify any two or more of the individuals for joint payment of the total benefits payable to them for the month.

(b) *Joint payee dies before cashing a check.* (1) If a check has been issued for joint payment to an individual and spouse residing in the same household, and one of the joint payees dies before the check has been cashed, we may authorize the surviving payee to cash the check. We make the authorization by placing on the face of the check a stamped legend signed by an official of the Social Security Administration or the Treasury Disbursing Office redesignating the survivor as the payee of the check.

(2) If the uncashed check represents benefits for a month after the month of death, we will not authorize the surviving payee to cash the check unless the proceeds of the check are necessary to meet the ordinary and necessary living expenses of the surviving payee.

(c) *Adjustment or recovery of overpayment.* If a check representing payment of benefits to an individual and spouse residing in the same household is cashed by the surviving payee under the authorization in paragraph (b) of this section, and the amount of the check exceeds the amount to which the surviving payee is entitled, we shall make appropriate adjustment or recovery of the excess amount.

Subpart T—Totalization Agreements

AUTHORITY: Secs. 205(a), 233, and 702(a)(5) of the Social Security Act (42 U.S.C. 405(a), 433, and 902(a)(5)).

SOURCE: 44 FR 42964, July 23, 1979, unless otherwise noted.

GENERAL PROVISIONS

§ 404.1901 Introduction.

(a) Under section 233 of the Social Security Act, the President may enter into an agreement establishing a totalization arrangement between the social security system of the United States and the social security system of a foreign country. An agreement permits entitlement to and the amount of old-age, survivors, disability, or derivative benefits to be based on a combination of a person's periods of coverage under the social security system of the United States and the social security system of the foreign country. An agreement also provides for the precluding of dual coverage and dual social security taxation for work covered under both systems. An agreement may provide that the provisions of the social security system of each country will apply equally to the nationals of both countries (regardless of where they reside). For this purpose, refugees, stateless persons, and other nonnationals who derive benefit rights from nationals, refugees, or stateless persons may be treated as nationals if they reside within one of the countries.

(b) The regulations in this subpart provide definitions and principles for the negotiation and administration of totalization agreements. Where necessary to accomplish the purposes of totalization, we will apply these definitions and principles, as appropriate and within the limits of the law, to accommodate the widely diverse characteristics of foreign social security systems.

§ 404.1902 Definitions.

For purposes of this subpart—

Act means the Social Security Act (42 U.S.C. 301 *et seq.*).

Agency means the agency responsible for the specific administration of a social security system including responsibility for implementing an agreement; the Social Security Administration (SSA) is the *agency* in the U.S.

Agreement means the agreement negotiated to provide coordination between the social security systems of the countries party to the agreement. The term agreement includes any administrative agreements concluded for purposes of administering the agreement.

Competent authority means the official with overall responsibility for administration of a country's social security system including applicable laws and international social security agreements; the Commissioner of Social Security is the *competent authority* in the U.S.

Period of coverage means a period of payment of contributions or a period of earnings based on wages for employment or on self-employment income, or

any similar period recognized as equivalent under the social security system of the U.S. or under the social security system of the foreign country which is a party to an agreement.

Residence or *ordinarily resides*, when used in agreements, has the following meaning for the U.S. *Residence* or *ordinarily resides* in a country means that a person has established a home in that country intending to remain there permanently or for an indefinite period of time. Generally, a person will be considered to have established a home in a country if that person assumes certain economic burdens, such as the purchase of a dwelling or establishment of a business, and participates in the social and cultural activities of the community. If residence in a country is established, it may continue even though the person is temporarily absent from that country. Generally, an absence of six months or less will be considered temporary. If an absence is for more than six months, residence in the country will generally be considered to continue only if there is sufficient evidence to establish that the person intends to maintain the residence. Sufficient evidence would include the maintenance of a home or apartment in that country, the departure from the country with a reentry permit, or similar acts. The existence of business or family associations sufficient to warrant the person's return would also be considered.

Social security system means a social insurance or pension system which is of general application and which provides for paying periodic benefits, or the actuarial equivalent, because of old-age, death, or disability.

[44 FR 42964, July 23, 1979, as amended at 62 FR 38452, July 18, 1997]

§ 404.1903 Negotiating totalization agreements.

An agreement shall be negotiated with the national government of the foreign country for the entire country. However, agreements may only be negotiated with foreign countries that have a social security system of general application in effect. The system shall be considered to be in effect if it is collecting social security taxes or paying social security benefits.

§ 404.1904 Effective date of a totalization agreement.

Section 233 of the Social Security Act provides that a totalization agreement shall become effective on any date provided in the agreement if—

(a) The date occurs after the expiration of a period during which at least one House of Congress has been in session on each of 60 days following the date on which the agreement is transmitted to Congress by the President; and

(b) Neither House of Congress adopts a resolution of disapproval of the agreement within the 60-day period described in paragraph (a) of this section.

[49 FR 29775, July 24, 1984]

§ 404.1905 Termination of agreements.

Each agreement shall contain provisions for its possible termination. If an agreement is terminated, entitlement to benefits and coverage acquired by an individual before termination shall be retained. The agreement shall provide for notification of termination to the other party and the effective date of termination.

BENEFIT PROVISIONS

§ 404.1908 Crediting foreign periods of coverage.

(a) *General.* To have foreign periods of coverage combined with U.S. periods of coverage for purposes of determining entitlement to and the amount of benefits payable under title II, an individual must have at least 6 quarters of coverage, as defined in section 213 of the Social Security Act, under the U.S. system. As a rule, SSA will accept foreign coverage information, as certified by the foreign country's agency, unless otherwise specified by the agreement. No credit will be given, however, for periods of coverage acquired before January 1, 1937.

(b) *For quarters of coverage purposes.* (1) Generally, a quarter of coverage (QC) will be credited for every 3 months (or equivalent period), or remaining fraction of 3 months, of coverage in a reporting period certified to SSA by the other country's agency. A reporting period used by a foreign country may be one calendar year or some

other period of time. QCs based on foreign periods of coverage may be credited as QCs only to calendar quarters not already QCs under title II. The QCs will be assigned chronologically beginning with the first calendar quarter (not already a QC under title II) within the reporting period and continuing until all the QCs are assigned, or the reporting period ends. Example: Country XYZ, which has an annual reporting period, certifies to SSA that a worker has 8 months of coverage in 1975, from January 1 to August 25. The worker has no QCs under title II in that year. Since 8 months divided by 3 months equals 2 QCs with a remainder of 2 months, the U.S. will credit the worker with 3 QCs. The QCs will be credited to the first 3 calendar quarters in 1975.

(2) If an individual fails to meet the requirements for currently insured status or the insured status needed for establishing a period of disability solely because of the assignment of QCs based on foreign coverage to calendar quarters chronologically, the QCs based on foreign coverage may be assigned to different calendar quarters within the beginning and ending dates of the reporting period certified by the foreign country, but only as permitted under paragraph (b)(1) of this section.

§ 404.1910 Person qualifies under more than one totalization agreement.

(a) An agreement may not provide for combining periods of coverage under more than two social security systems.

(b) If a person qualifies under more than one agreement, the person will receive benefits from the U.S. only under the agreement affording the most favorable treatment.

(c) In the absence of evidence to the contrary, the agreement that affords the most favorable treatment for purposes of paragraph (b) of this section will be determined as follows:

(1) If benefit amounts are the same under all such agreements, benefits will be paid only under the agreement which affords the earliest month of entitlement.

(2) If benefit amounts and the month of entitlement are the same under all such agreements, benefits will be paid only under the agreement under which all information necessary to pay such benefits is first available.

(3) If benefit amounts under all such agreements are not the same, benefits will be paid only under the agreement under which the highest benefit is payable. However, benefits may be paid under an agreement under which a lower benefit is payable for months prior to the month of first entitlement to such higher benefit.

[44 FR 42964, July 23, 1979, as amended at 49 FR 29775, July 24, 1984]

§ 404.1911 Effects of a totalization agreement on entitlement to hospital insurance benefits.

A person may not become entitled to hospital insurance benefits under section 226 or section 226A of the Act by combining the person's periods of coverage under the social security system of the United States with the person's periods of coverage under the social security system of the foreign country. Entitlement to hospital insurance benefits is not precluded if the person otherwise meets the requirements.

COVERAGE PROVISIONS

§ 404.1913 Precluding dual coverage.

(a) *General.* Employment or self-employment or services recognized as equivalent under the Act or the social security system of the foreign country shall, on or after the effective date of the agreement, result in a period of coverage under the U.S. system or under the foreign system, but not under both. Methods shall be set forth in the agreement for determining under which system the employment, self-employment, or other service shall result in a period of coverage.

(b) *Principles for precluding dual coverage.* (1) An agreement precludes dual coverage by assigning responsibility for coverage to the U.S. or a foreign country. An agreement may modify the coverage provisions of title II of the Act to accomplish this purpose. Where an agreement assigns coverage to the foreign country, it may exempt from coverage services otherwise covered by the Act. Where an agreement assigns coverage to the U.S., it may extend coverage to services not otherwise covered by the Act but only for taxable

years beginning on or after April 20, 1983.

(2) If the work would otherwise be covered by both countries, an agreement will exempt it from coverage by one of the countries.

(3) Generally, an agreement will provide that a worker will be covered by the country in which he or she is employed and will be exempt from coverage by the other country.

Example: A U.S. national employed in XYZ country by an employer located in the United States will be covered by XYZ country and exempt from U.S. coverage.

(4) An agreement may provide exceptions to the principle stated in paragraph (b)(3) of this section so that a worker will be covered by the country to which he or she has the greater attachment.

Example: A U.S. national sent by his employer located in the United States to work temporarily for that employer in XYZ country will be covered by the United States and will be exempt from coverage by XYZ country.

(5) Generally, if a national of either country resides in one country and has self employment income that is covered by both countries, an agreement will provide that the person will be covered by the country in which he or she resides and will be exempt from coverage by the other country.

(6) Agreements may provide for variations from the general principles for precluding dual coverage to avoid inequitable or anomalous coverage situations for certain workers. However, in all cases coverage must be provided by one of the countries.

[44 FR 42964, July 23, 1979, as amended at 50 FR 36575, Sept. 9, 1985]

§ 404.1914 Certificate of coverage.

Under some agreements, proof of coverage under one social security system may be required before the individual may be exempt from coverage under the other system. Requests for certificates of coverage under the U.S. system may be submitted by the employer, employee, or self-employed individual to SSA.

§ 404.1915 Payment of contributions.

On or after the effective date of the agreement, to the extent that employment or self-employment (or service recognized as equivalent) under the U.S. social security system or foreign system is covered under the agreement, the agreement shall provide that the work or equivalent service be subject to payment of contributions or taxes under only one system (see sections 1401(c), 3101(c), and 3111(c) of the Internal Revenue Code of 1954). The system under which contributions or taxes are to be paid is the system under which there is coverage pursuant to the agreement.

COMPUTATION PROVISIONS

§ 404.1918 How benefits are computed.

(a) *General.* Unless otherwise provided in an agreement, benefits will be computed in accordance with this section. Benefits payable under an agreement are based on a pro rata primary insurance amount (PIA), which we determine as follows:

(1) We establish a theoretical earnings record for a worker which attributes to all computation base years (see §§ 404.211(b) and 404.241(c)) the same relative earnings position (REP) as he or she has in the years of his or her actual U.S. covered work. As explained in paragraph (b)(3) of this section, the REP is derived by determining the ratio of the worker's actual U.S. covered earnings in each year to the average of the total U.S. covered wages of all workers for that year, and then averaging the ratios for all such years. This average is the REP and is expressed as a percentage.

(2) We compute a theoretical PIA as prescribed in § 404.1918(c) based on the theoretical earnings record and the provisions of subpart C of this part.

(3) We multiply the theoretical PIA by a fraction equal to the number of quarters of coverage (QC's) which the worker completed under the U.S. Social Security system over the number of calendar quarters in the worker's coverage lifetime (see paragraph (d)(2) of this section). See § 404.140 for the definition of QC.

(4) If the pro rata PIA is higher than the PIA which would be computed if

the worker were insured under the U.S. system without totalization, the pro rata PIA will be reduced to the later PIA.

(b) *Establishing a theoretical earnings record.* (1) To establish a worker's theoretical earnings record, we divide his or her U.S. earnings in each year credited with at least one U.S. QC by the average of the total wages of all workers for that year and express the quotient as a percentage. For the years 1937 through 1950, the average of the total wages is as follows:

Year	Average of the total wages of all workers
1937	$1,137.96
1938	1,053.24
1939	1,142.36
1940	1,195.00
1941	1,276.04
1942	1,454.28
1943	1,713.52
1944	1,936.32
1945	2,021.40
1946	1,891.76
1947	2,175.32
1948	2,361.64
1949	2,483.20
1950	2,543.96

(2) For years after 1950, the average of the total wages is as prescribed in § 404.211(c). If a worker has earnings in the year preceding the year of eligibility or death, or in a later year, we may not have been able to establish the average of the total wages of all workers for that year. Therefore, we will divide a worker's actual earnings in these years by the average of the total wages for the latest year for which that information is available. Average wage information is considered available on January 1 of the year following the year in which it is published in the FEDERAL REGISTER.

(3) The percentages for all years of actual covered earnings are then averaged to give the worker's REP for the entire period of work in the U.S. In determining the percentages for all years of covered earnings and the REP, we make adjustments as necessary to take account of the fact that the covered earnings for some years may have involved less than four U.S. QC's. The actual earnings that are taken into account in determining the percentage for any year with 1, 2, or 3 QC's cannot exceed ¼, ½, or ¾, respectively, of the maximum creditable earnings for that year. When we determine the REP from the percentages for all years, we add the percentages for all years, divide this sum by the total number of QC's credited to the worker, and multiply this quotient by 4 (see Example 1 of paragraph (d) of this section). This has the effect of calculating the REP on a quarterly basis.

(4) For each of the worker's computation base years (see §§ 404.211(b), 404.221(b) and 404.241(c)), we multiply the average of the total wages of all workers for that year by the worker's REP. The product is the amount of earnings attributed to the worker for that year, subject to the annual wage limitation (see § 404.1047). The worker's theoretical earnings record consists of his or her attributed earnings based on his or her REP for all computation base years. However, we do not attribute earnings to computation base years before the year of attainment of age 22 or to computation base years beginning with the year of attainment of retirement age (or the year in which a period of disability begins), unless the worker is actually credited with U.S. earnings in those years. In death cases, earnings for the year of death will be attributed only through the quarter of death, on a proportional basis.

(c) *Determining the theoretical PIA.* We determine the worker's theoretical PIA based on his or her theoretical earnings record by applying the same computation method that would have applied under subpart C if the worker had these theoretical earnings and had qualified for benefits without application of an agreement. However, when the criteria in § 404.210(a) for the Average Indexed Monthly Earnings (AIME) computation method are met, only that method is used. If these criteria are not met but the criteria in § 404.220(a) for the Average Monthly Wage method are met, then only that method is used. If neither of these criteria are met, then the old-start method described in § 404.241 is used. If a theoretical PIA is to be determined based on a worker's AIME, theoretical earnings amounts for each year, determined under paragraph (b) of this section, are

indexed in determining the AIME under § 404.211.

(d) *Determining the pro rata PIA.* We then determine a pro rata PIA from the theoretical PIA. The pro rata PIA is the product of—

(1) The theoretical PIA; and

(2) The ratio of the worker's actual number of U.S. QC's to the number of calendar quarters in the worker's coverage lifetime. A coverage lifetime means the worker's benefit computation years as determined under § 404.211(e), § 404.221(c), or § 404.241(d).

Example 1: C attains age 62 in 1982 and needs 31 QC's to be insured. C worked under the U.S. system from July 1, 1974 to December 31, 1980 and therefore has only 6½ years during which he worked under the U.S. system (26 QC's). C, however, has worked under the Social Security system of a foreign country that is party to a totalization agreement, and his total U.S. and foreign work, combined as described in § 404.1908, equals more than 31 QC's. Thus, the combined coverage gives C insured status. The benefit is computed as follows:

Step 1: Establish C's theoretical earnings record:

The following table shows: (1) C's actual U.S. covered earnings for each year, (2) the average of the total wages of all workers for that year and (3) the ratio of (1) to (2):

Year	QC's	C's actual U.S. covered earnings	National average wage	Percentage ratio of (1) to (2)
		(1)	(2)	(3)
1974	2	$2,045.08	$8,030.76	25.46558
1975	4	7,542.00	8,630.92	87.38350
1976	4	9,016.00	9,226.48	97.71874
1977	4	9,952.00	9,779.44	101.76452
1978	4	10,924.00	10,556.03	103.48587
1979	4	12,851.00	11,479.46	111.94777
1980	4	11,924.00	12,513.46	95.28939

C's REP is the average of the ratios in column 3, adjusted to take account of the fact that C had only 2 QC's in 1974. Thus, the REP equals the sum of the figures in column 3 (623.05537), divided by the total number of C's QC's (26) and multiplied by 4, or 95.85467 percent.

Since C attained age 62 in 1982, his computation base years are 1951 through 1981. To establish his theoretical earnings record we use 95.85467 percent of the national average wage for each of the years 1951 through 1981. Since national average wage data is not available for 1981, for that year we attribute 95.85467 percent of the national average wage for 1980 or $11,994.74. His theoretical earnings record would look like this:

1951	$2,683.13
1952	2,850.07
1953	3,009.30
1954	3,024.83
1955	3,164.58
1956	3,385.93
1957	3,490.76
1958	3,521.51
1959	3,695.96
1960	3,841.01
1961	3,917.35
1962	4,113.51
1963	4,214.38
1964	4,386.62
1965	4,465.60
1966	4,733.65
1967	4,997.33
1968	5,340.79
1969	5,649.44
1970	5,929.80
1971	6,227.75
1972	6,838.08
1973	7,265.94
1974	7,697.86
1975	8,273.14
1976	8,844.01
1977	9,374.05
1978	10,118.45
1979	11,003.60
1980	11,994.74
1981	11,994.74

Step 2: Compute the theoretical PIA: Since C attains age 62 in 1982, we determine his theoretical PIA using an AIME computation. In applying the AIME computation, we index each year's earnings on the theoretical earnings record in accordance with § 404.211(d). In this example, the theoretical PIA is $453.

Step 3: Compute the pro rata PIA:

$$\frac{\text{Theoretical PIA} - \text{Actual U.S. QC's}}{\text{calendar quarters in benefit computation years}}$$

$$\frac{\$453 - 26 \text{ QC's } (6\tfrac{1}{2} \text{ years})}{104 \text{ quarters } (26 \text{ years})}$$

$$= \$113.20 \text{ pro rata PIA}$$

Example 2: M needs 27 QC's to be insured, but she has only 3 years of work (12 QC's) under the U.S. system. M has enough foreign work, however, to be insured. She attained age 62 in 1978, and her U.S. covered earnings were in 1947, 1948 and 1949. Based on M's date of birth, her theoretical PIA can be computed, in accordance with § 404.220, under a new start method. If M's earnings in 1947, 1948, and 1949 were 50 percent, 60 percent and 70 percent, respectively, of the average wage for each year, her REP would be 60 percent. For each year in the computation period, 60 percent of the average wage for that year will be attributed as M's assumed earnings. The theoretical PIA will then be computed as described in §§ 404.220 through 404.222.

To determine M's pro rata PIA, the theoretical PIA will be multiplied by the ratio of

the actual number of U.S. QC's to the number of calendar quarters in the benefit computation years. There are 22 benefit computation years, or 88 quarters. The pro rata PIA would, therefore, be $^{12}/_{88}$ × theoretical PIA.

(e) *Rounding of benefits.* (1) If the effective date of the pro rata PIA is before June 1982, we will round to the next higher multiple of 10 cents if it is not already a multiple of 10 cents.

(2) If the effective date of the pro rata PIA is June 1982 or later, we will round to the next lower multiple of 10 cents if it is not already a multiple of 10 cents.

(f) *Auxiliary and survivors benefits; reductions; family maximum.* We will determine auxiliary and survivors benefit amounts (see subpart D) on the basis of the pro rata PIA. We will apply the regular reductions for age under section 202(q) of the Act to the benefits of the worker or to any auxiliaries or survivors which are based on the pro rata PIA (see § 404.410). Benefits will be payable subject to the family maximum (see § 404.403) derived from the pro rata PIA. If the pro rata PIA is less than the minimum PIA, the family maximum will be 1½ times the pro rata PIA.

[49 FR 29775, July 24, 1984]

§ 404.1919 How benefits are recomputed.

Unless otherwise provided in an agreement, we will recompute benefits in accordance with this section. We will recompute the pro rata PIA only if the inclusion of the additional earnings results in an increase in the benefits payable by the U.S. to all persons receiving benefits on the basis of the worker's earnings. Subject to this limitation, the pro rata PIA will be automatically recomputed (see § 404.285) to include additional earnings under the U.S. system. In so doing, a new REP will be established for the worker, taking the additional earnings into account, and assumed earnings in the computation base years used in the original computation will be refigured using the new REP. Assumed earnings will also be determined for the year of additional earnings using the new REP. The additional U.S. earnings will also be used in refiguring the ratio described in § 404.1918(d)(2).

[49 FR 29777, July 24, 1984]

§ 404.1920 Supplementing the U.S. benefit if the total amount of the combined benefits is less than the U.S. minimum benefit.

If a resident of the U.S. receives benefits under an agreement from both the U.S. and from the foreign country, the total amount of the two benefits may be less than the amount for which the resident would qualify under the U.S. system based on the minimum PIA as in effect for persons first becoming eligible for benefits before January 1982. An agreement may provide that in the case of an individual who first becomes eligible for benefits before January 1982, the U.S. will supplement the total amount to raise it to the amount for which the resident would have qualified under the U.S. system based on the minimum PIA. (The minimum benefit will be based on the first figure in column IV in the table in section 215(a) of the Act for a person becoming eligible for the benefit before January 1, 1979, or the PIA determined under section 215(a)(1)(C)(i)(I) of the Act (as in effect in December 1981) for a person becoming eligible for the benefit after December 31, 1978.)

[49 FR 29777, July 24, 1984]

§ 404.1921 Benefits of less than $1 due.

If the monthly benefit amount due an individual (or several individuals, e.g., children, where several benefits are combined in one check) as a result of a claim filed under an agreement is less than $1, the benefits may be accumulated until they equal or exceed $5.

OTHER PROVISIONS

§ 404.1925 Applications.

(a)(1) An application, or written statement requesting benefits, filed with the competent authority or agency of a country with which the U.S. has concluded an agreement shall be considered an application for benefits under title II of the Act as of the date it is filed with the competent authority or agency if—

(i) An applicant expresses or implies an intent to claim benefits from the U.S. under an agreement; and

(ii) The applicant files an application that meets the requirements in subpart G of this part.

(2) The application described in paragraph (a)(1)(ii) of this section must be filed, even if it is not specifically provided for in the agreement.

(b) Benefits under an agreement may not be paid on the basis of an application filed before the effective date of the agreement.

§ 404.1926 Evidence.

(a) An applicant for benefits under an agreement shall submit the evidence needed to establish entitlement, as provided in subpart H of this part. Special evidence requirements for disability benefits are in subpart P of this part.

(b) Evidence submitted to the competent authority or agency of a country with which the U.S. has concluded an agreement shall be considered as evidence submitted to SSA. SSA shall use the rules in §§ 404.708 and 404.709 to determine if the evidence submitted is sufficient, or if additional evidence is needed to prove initial or continuing entitlement to benefits.

(c) If an application is filed for disability benefits, SSA shall consider medical evidence submitted to a competent authority or agency, as described in paragraph (b) of this section, and use the rules of subpart P of this part for making a disability determination.

§ 404.1927 Appeals.

(a) A request for reconsideration, hearing, or Appeals Council review of a determination that is filed with the competent authority or agency of a country with which the U.S. has concluded an agreement, shall be considered to have been timely filed with SSA if it is filed within the 60-day time period provided in §§ 404.911, 404.918, and 404.946.

(b) A request for reconsideration, hearing, or Appeals Council review of a determination made by SSA resulting from a claim filed under an agreement shall be subject to the provisions in subpart J of this part. The rules governing administrative finality in subpart J of this part shall also apply.

§ 404.1928 Effect of the alien non-payment provision.

An agreement may provide that a person entitled to benefits under title II of the Social Security Act may receive those benefits while residing in the foreign country party to the agreement, regardless of the alien non-payment provision (see § 404.460).

§ 404.1929 Overpayments.

An agreement may not authorize the adjustment of title II benefits to recover an overpayment made under the social security system of a foreign country (see § 404.501). Where an overpayment is made under the U.S. system, the provisions in subpart F of this part will apply.

§ 404.1930 Disclosure of information.

The use of information furnished under an agreement generally shall be governed by the national statutes on confidentiality and disclosure of information of the country that has been furnished the information. (The U.S. will be governed by pertinent provisions of the Social Security Act, the Freedom of Information Act, the Privacy Act, the Tax Reform Act, and other related statutes.) In negotiating an agreement, consideration, should be given to the compatibility of the other country's laws on confidentiality and disclosure to those of the U.S. To the extent possible, information exchanged between the U.S. and the foreign country should be used exclusively for purposes of implementing the agreement and the laws to which the agreement pertains.

Subpart U—Representative Payment

AUTHORITY: Secs. 205(a), (j), and (k), and 702(a)(5) of the Social Security Act (42 U.S.C. 405(a), (j), and (k), and 902(a)(5)).

SOURCE: 47 FR 30472, July 14, 1982, unless otherwise noted.

§ 404.2001 Introduction.

(a) *Explanation of representative payment.* This subpart explains the principles and procedures that we follow in determining whether to make representative payment and in selecting a representative payee. It also explains the responsibilities that a representative payee has concerning the use of the funds he or she receives on behalf of a beneficiary. A representative payee may be either a person or an organization selected by us to receive benefits on behalf of a beneficiary. A representative payee will be selected if we believe that the interest of a beneficiary will be served by representative payment rather than direct payment of benefits. Generally, we appoint a representative payee if we have determined that the beneficiary is not able to manage or direct the management of benefit payments in his or her interest.

(b) *Policy used to determine whether to make representative payment.* (1) Our policy is that every beneficiary has the right to manage his or her own benefits. However, some beneficiaries due to a mental or physical condition or due to their youth may be unable to do so. Under these circumstances, we may determine that the interests of the beneficiary would be better served if we certified benefit payments to another person as a representative payee.

(2) If we determine that representative payment is in the interest of a beneficiary, we will appoint a representative payee. We may appoint a representative payee even if the beneficiary is a legally competent individual. If the beneficiary is a legally incompetent individual, we may appoint the legal guardian or some other person as a representative payee.

(3) If payment is being made directly to a beneficiary and a question arises concerning his or her ability to manage or direct the management of benefit payments, we will, if the beneficiary is 18 years old or older and has not been adjudged legally incompetent, continue to pay the beneficiary until we make a determination about his or her ability to manage or direct the management of benefit payments and the selection of a representative payee.

§ 404.2010 When payment will be made to a representative payee.

(a) We pay benefits to a representative payee on behalf of a beneficiary 18 years old or older when it appears to us that this method of payment will be in the interest of the beneficiary. We do this if we have information that the beneficiary is—

(1) Legally incompetent or mentally incapable of managing benefit payments; or

(2) Physically incapable of managing or directing the management of his or her benefit payments.

(b) Generally, if a beneficiary is under age 18, we will pay benefits to a representative payee. However, in certain situations, we will make direct payments to a beneficiary under age 18 who shows the ability to manage the benefits. For example, we make direct payments to a beneficiary under age 18 if the beneficiary is—

(1) Receiving disability insurance benefits on his or her own Social Security earnings record; or

(2) Serving in the military services; or

(3) Living alone and supporting himself or herself; or

(4) A parent and files for himself or herself and/or his or her child and he or she has experience in handling his or her own finances; or

(5) Capable of using the benefits to provide for his or her current needs and no qualified payee is available; or

(6) Within 7 months of attaining age 18 and is initially filing an application for benefits.

[47 FR 30472, July 14, 1982, as amended at 54 FR 35483, Aug. 28, 1989]

§ 404.2011 What happens to your monthly benefits while we are finding a suitable representative payee for you?

(a) *We may pay you directly.* We will pay current monthly benefits directly to you while finding a suitable representative payee unless we determine that paying you directly would cause substantial harm to you. We determine substantial harm as follows:

(1) If you are receiving disability payments and we have determined that

you have a drug addiction or alcoholism condition, or you are legally incompetent, or you are under age 15, we will presume that substantial harm exists. However, we will allow you to rebut this presumption by presenting evidence that direct payment would not cause you substantial harm.

(2) If you do not fit any of these categories, we make findings of substantial harm on a case-by-case basis. We consider all matters that may affect your ability to manage your benefits in your own best interest. We decide that substantial harm exists if both of the following conditions exist:

(i) Directly receiving benefits can be expected to cause you serious physical or mental injury.

(ii) The possible effect of the injury would outweigh the effect of having no income to meet your basic needs.

(b) *We may delay or suspend your payments.* If we find that direct payment will cause substantial harm to you, we may delay (in the case of initial entitlement to benefits) or suspend (in the case of existing entitlement to benefits) payments for as long as one month while we try to find a suitable representative payee for you. If we do not find a payee within one month, we will pay you directly. If you are receiving disability payments and we have determined that you have a drug addiction and alcoholism condition, or you are legally incompetent, or you are under age 15, we will withhold payment until a representative payee is appointed even if it takes longer than one month. We will, however, as noted in paragraph (a)(1) of this section, allow you to present evidence to rebut the presumption that direct payment would cause you substantial harm. See § 404.2001(b)(3) for our policy on suspending benefits if you are currently receiving benefits directly.

Example 1: Substantial Harm Exists. We are unable to find a representative payee for Mr. X, a 67 year old retirement beneficiary who is an alcoholic. Based on contacts with the doctor and beneficiary, we determine that Mr. X was hospitalized recently for his drinking. Paying him directly will cause serious injury, so we may delay payment for as long as one month based on substantial harm while we locate a suitable representative payee.

Example 2: Substantial Harm Does Not Exist. We approve a claim for Mr. Y, a title II claimant who suffers from a combination of mental impairments but who is not legally incompetent. We determine that Mr. Y needs assistance in managing his benefits, but we have not found a representative payee. Although we believe that Mr. Y may not use the money wisely, there is no indication that receiving funds directly would cause him substantial harm (*i.e.*, serious physical or mental injury). We must pay current benefits directly to Mr. Y while we locate a suitable representative payee.

(c) *How we pay delayed or suspended benefits.* Payment of benefits, which were delayed or suspended pending appointment of a representative payee, can be made to you or your representative payee as a single sum or in installments when we determine that installments are in your best interest.

[69 FR 60232, Oct. 7, 2004]

§ 404.2015 Information considered in determining whether to make representative payments.

In determining whether to make representative payment we consider the following information:

(a) *Court determinations.* If we learn that a beneficiary has been found to be legally incompetent, a certified copy of the court's determination will be the basis of our determination to make representative payment.

(b) *Medical evidence.* When available, we will use medical evidence to determine if a beneficiary is capable of managing or directing the management of benefit payments. For example, a statement by a physician or other medical professional based upon his or her recent examination of the beneficiary and his or her knowledge of the beneficiary's present condition will be used in our determination, if it includes information concerning the nature of the beneficiary's illness, the beneficiary's chances for recovery and the opinion of the physician or other medical professional as to whether the beneficiary is able to manage or direct the management of benefit payments.

(c) *Other evidence.* We will also consider any statements of relatives, friends and other people in a position to know and observe the beneficiary, which contain information helpful to us in deciding whether the beneficiary

is able to manage or direct the management of benefit payments.

§ 404.2020 Information considered in selecting a representative payee.

In selecting a payee we try to select the person, agency, organization or institution that will best serve the interest of the beneficiary. In making our selection we consider—

(a) The relationship of the person to the beneficiary;

(b) The amount of interest that the person shows in the beneficiary;

(c) Any legal authority the person, agency, organization or institution has to act on behalf of the beneficiary;

(d) Whether the potential payee has custody of the beneficiary; and

(e) Whether the potential payee is in a position to know of and look after the needs of the beneficiary.

§ 404.2021 What is our order of preference in selecting a representative payee for you?

As a guide in selecting a representative payee, categories of preferred payees have been established. These preferences are flexible. Our primary concern is to select the payee who will best serve the beneficiary's interest. The preferences are:

(a) For beneficiaries 18 years old or older (except those described in paragraph (b) of this section), our preference is—

(1) A legal guardian, spouse (or other relative) who has custody of the beneficiary or who demonstrates strong concern for the personal welfare of the beneficiary;

(2) A friend who has custody of the beneficiary or demonstrates strong concern for the personal welfare of the beneficiary;

(3) A public or nonprofit agency or institution having custody of the beneficiary;

(4) A private institution operated for profit and licensed under State law, which has custody of the beneficiary; and

(5) Persons other than above who are qualified to carry out the responsibilities of a payee and who are able and willing to serve as a payee for a beneficiary; e.g., members of community groups or organizations who volunteer to serve as payee for a beneficiary.

(b) For individuals who are disabled and who have a drug addiction or alcoholism condition our preference is—

(1) A community-based nonprofit social service agency which is licensed by the State, or bonded;

(2) A Federal, State, or local government agency whose mission is to carry out income maintenance, social service, or health care-related activities;

(3) A State or local government agency with fiduciary responsibilities;

(4) A designee of an agency (other than a Federal agency) referred to in paragraphs (b)(1), (2), and (3) of this section, if appropriate; or

(5) A family member.

(c) For beneficiaries under age 18, our preference is—

(1) A natural or adoptive parent who has custody of the beneficiary, or a guardian;

(2) A natural or adoptive parent who does not have custody of the beneficiary, but is contributing toward the beneficiary's support and is demonstrating strong concern for the beneficiary's well being;

(3) A natural or adoptive parent who does not have custody of the beneficiary and is not contributing toward his or her support but is demonstrating strong concern for the beneficiary's well being;

(4) A relative or stepparent who has custody of the beneficiary;

(5) A relative who does not have custody of the beneficiary but is contributing toward the beneficiary's support and is demonstrating concern for the beneficiary's well being;

(6) A relative or close friend who does not have custody of the beneficiary but is demonstrating concern for the beneficiary's well being; and

(7) An authorized social agency or custodial institution.

[47 FR 30472, July 14, 1982; 47 FR 32936, July 30, 1982, as amended at 69 FR 60232, Oct. 7, 2004]

§ 404.2022 Who may not serve as a representative payee?

A representative payee applicant may not serve if he/she:

(a) Has been convicted of a violation under section 208, 811 or 1632 of the Social Security Act.

(b) Has been convicted of an offense resulting in imprisonment for more than 1 year. However, we may make an exception to this prohibition, if the nature of the conviction is such that selection of the applicant poses no risk to the beneficiary and the exception is in the beneficiary's best interest.

(c) Receives title II, VIII, or XVI benefits through a representative payee.

(d) Previously served as a representative payee and was found by us, or a court of competent jurisdiction, to have misused title II, VIII or XVI benefits. However, if we decide to make an exception to this prohibition, we must evaluate the payee's performance at least every 3 months until we are satisfied that the payee poses no risk to the beneficiary's best interest. Exceptions are made on a case-by-case basis if all of the following are true:

(1) Direct payment of benefits to the beneficiary is not in the beneficiary's best interest.

(2) No suitable alternative payee is available.

(3) Selecting the payee applicant as representative payee would be in the best interest of the beneficiary.

(4) The information we have indicates the applicant is now suitable to serve as a representative payee.

(5) The payee applicant has repaid the misused benefits or has a plan to repay them.

(e) Is a creditor. A creditor is someone who provides you with goods or services for consideration. This restriction does not apply to the creditor who poses no risk to you and whose financial relationship with you presents no substantial conflict of interest, and who is any of the following:

(1) A relative living in the same household as you do.

(2) Your legal guardian or legal representative.

(3) A facility that is licensed or certified as a care facility under the law of a State or a political subdivision of a State.

(4) A qualified organization authorized to collect a monthly fee from you for expenses incurred in providing representative payee services for you, under § 404.2040a.

(5) An administrator, owner, or employee of the facility in which you live, and we are unable to locate an alternative representative payee.

(6) Any other individual we deem appropriate based on a written determination.

Example 1: Sharon applies to be representative payee for Ron who we have determined cannot manage his benefits. Sharon has been renting a room to Ron for several years and assists Ron in handling his other financial obligations, as needed. She charges Ron a reasonable amount of rent. Ron has no other family or friends willing to help manage his benefits or to act as representative payee. Sharon has demonstrated that her interest in and concern for Ron goes beyond her desire to collect the rent each month. In this instance, we may select Sharon as Ron's representative payee because a more suitable payee is not available, she appears to pose no risk to Ron and there is minimal conflict of interest. We will document this decision.

Example 2: In a situation similar to the one above, Ron's landlord indicates that she is applying to be payee only to ensure receipt of her rent. If there is money left after payment of the rent, she will give it directly to Ron to manage on his own. In this situation, we would not select the landlord as Ron's representative payee because of the substantial conflict of interest and lack of interest in his well being.

[69 FR 60232, Oct. 7, 2004, as amended at 71 FR 61407, Oct. 18, 2006]

§ 404.2024 How do we investigate a representative payee applicant?

Before selecting an individual or organization to act as your representative payee, we will perform an investigation.

(a) *Nature of the investigation.* As part of the investigation, we do the following:

(1) Conduct a face-to-face interview with the payee applicant unless it is impracticable as explained in paragraph (c) of this section.

(2) Require the payee applicant to submit documented proof of identity, unless information establishing identity has recently been submitted with an application for title II, VIII or XVI benefits.

(3) Verify the payee applicant's Social Security account number or employer identification number.

(4) Determine whether the payee applicant has been convicted of a violation of section 208, 811 or 1632 of the Social Security Act.

(5) Determine whether the payee applicant has previously served as a representative payee and if any previous appointment as payee was revoked or terminated for misusing title II, VIII or XVI benefits.

(6) Use our records to verify the payee applicant's employment and/or direct receipt of title II, VIII, or XVI benefits.

(7) Verify the payee applicant's concern for the beneficiary with the beneficiary's custodian or other interested person.

(8) Require the payee applicant to provide adequate information showing his or her relationship to the beneficiary and to describe his or her responsibility for the care of the beneficiary.

(9) Determine whether the payee applicant is a creditor of the beneficiary (see § 404.2022(d)).

(b) *Subsequent face-to-face interviews.* After holding a face-to-face interview with a payee applicant, subsequent face-to-face interviews are not required if that applicant continues to be qualified and currently is acting as a payee, unless we determine, within our discretion, that a new face-to-face interview is necessary. We base this decision on the payee's past performance and knowledge of and compliance with our reporting requirements.

(c) *Impracticable.* We may consider a face-to-face interview impracticable if it would cause the payee applicant undue hardship. For example, the payee applicant would have to travel a great distance to the field office. In this situation, we may conduct the investigation to determine the payee applicant's suitability to serve as a representative payee without a face-to-face interview.

[69 FR 60233, Oct. 7, 2004, as amended at 73 FR 66521, Nov. 10, 2008]

§ 404.2025 What information must a representative payee report to us?

Anytime after we select a representative payee for you, we may ask your payee to give us information showing a continuing relationship with you, a continuing responsibility for your care, and how he/she used the payments on your behalf. If your representative payee does not give us the requested information within a reasonable period of time, we may stop sending your benefit payment to him/her—unless we determine that he/she had a satisfactory reason for not meeting our request and we subsequently receive the requested information. If we decide to stop sending your payment to your representative payee, we will consider paying you directly (in accordance with § 404.2011) while we look for a new payee.

[69 FR 60233, Oct. 7, 2004]

§ 404.2030 How will we notify you when we decide you need a representative payee?

(a) We notify you in writing of our determination to make representative payment. This advance notice explains that we have determined that representative payment is in your interest, and it provides the name of the representative payee we have selected. We provide this notice before we actually appoint the payee. If you are under age 15, an unemancipated minor under the age of 18, or legally incompetent, our written notice goes to your legal guardian or legal representative. The advance notice:

(1) Contains language that is easily understandable to the reader.

(2) Identifies the person designated as your representative payee.

(3) Explains that you, your legal guardian, or your legal representative can appeal our determination that you need a representative payee.

(4) Explains that you, your legal guardian, or your legal representative can appeal our designation of a particular person or organization to serve as your representative payee.

(5) Explains that you, your legal guardian, or your legal representative can review the evidence upon which our designation of a particular representative payee is based and submit additional evidence.

(b) If you, your legal guardian, or your legal representative objects to representative payment or to the designated payee, we will handle the objection as follows:

(1) If you disagree with the decision and wish to file an appeal, we will process it under subpart J of this part.

(2) If you received your advance notice by mail and you protest or file your appeal within 10 days after you receive this notice, we will delay the action until we make a decision on your protest or appeal. (If you received and signed your notice while you were in the local field office, our decision will be effective immediately.)

[69 FR 60233, Oct. 7, 2004]

§ 404.2035 What are the responsibilities of your representative payee?

A representative payee has a responsibility to—

(a) Use the benefits received on your behalf only for your use and benefit in a manner and for the purposes he or she determines, under the guidelines in this subpart, to be in your best interests;

(b) Keep any benefits received on your behalf separate from his or her own funds and show your ownership of these benefits unless he or she is your spouse or natural or adoptive parent or stepparent and lives in the same household with you or is a State or local government agency for whom we have granted an exception to this requirement;

(c) Treat any interest earned on the benefits as your property;

(d) Notify us of any event or change in your circumstances that will affect the amount of benefits you receive, your right to receive benefits, or how you receive them;

(e) Submit to us, upon our request, a written report accounting for the benefits received on your behalf, and make all supporting records available for review if requested by us; and

(f) Notify us of any change in his or her circumstances that would affect performance of his/her payee responsibilities.

[71 FR 61407, Oct. 18, 2006]

§ 404.2040 Use of benefit payments.

(a) *Current maintenance.* (1) We will consider that payments we certify to a representative payee have been used for the use and benefit of the beneficiary if they are used for the beneficiary's current maintenance. Current maintenance includes cost incurred in obtaining food, shelter, clothing, medical care, and personal comfort items.

Example: An aged beneficiary is entitled to a monthly Social Security benefit of $400. Her son, who is her payee, disburses her benefits in the following manner:

Rent and utilities	$200
Medical	25
Food	60
Clothing (coat)	55
Savings	30
Miscellaneous	30

The above expenditures would represent proper disbursements on behalf of the beneficiary.

(2) Notwithstanding the provisions of paragraph (a)(1) of this section, if a beneficiary is a member of an Aid to Families With Dependent Children (AFDC) assistance unit, we do not consider it inappropriate for a representative payee to make the benefit payments available to the AFDC assistance unit.

(b) *Institutional care.* If a beneficiary is receiving care in a Federal, State, or private institution because of mental or physical incapacity, current maintenance includes the customary charges made by the institution, as well as expenditures for those items which will aid in the beneficiary's recovery or release from the institution or expenses for personal needs which will improve the beneficiary's conditions while in the institution.

Example: An institutionalized beneficiary is entitled to a monthly Social Security benefit of $320. The institution charges $700 a month for room and board. The beneficiary's brother, who is the payee, learns the beneficiary needs new shoes and does not have any funds to purchase miscellaneous items at the institution's canteen.

The payee takes his brother to town and buys him a pair of shoes for $29. He also takes the beneficiary to see a movie which costs $3. When they return to the institution, the payee gives his brother $3 to be used at the canteen.

Although the payee normally withholds only $25 a month from Social Security benefit for the beneficiary's personal needs, this month the payee deducted the above expenditures and paid the institution $10 less than he usually pays.

The above expenditures represent what we would consider to be proper expenditures for current maintenance.

(c) *Support of legal dependents.* If the current maintenance needs of the beneficiary are met, the payee may use part of the payments for the support of the beneficiary's legally dependent spouse, child, and/or parent.

Example: A disabled beneficiary receives a Veterans Administration (VA) benefit of $325 and a Social Security benefit of $525. The beneficiary resides in a VA hospital and his VA benefits are sufficient to provide for all of his needs; *i.e.*, cost of care and personal needs. The beneficiary's legal dependents—his wife and two children—have a total income of $250 per month in Social Security benefits. However, they have expenses of approximately $450 per month.

Because the VA benefits are sufficient to meet the beneficiary's needs, it would be appropriate to use part of his Social Security benefits to support his dependents.

(d) *Claims of creditors.* A payee may not be required to use benefit payments to satisfy a debt of the beneficiary, if the debt arose prior to the first month for which payments are certified to a payee. If the debt arose prior to this time, a payee may satisfy it only if the current and reasonably foreseeable needs of the beneficiary are met.

Example: A retroactive Social Security check in the amount of $1,640, representing benefits due for July 1980 through January 1981, was issued on behalf of the beneficiary to the beneficiary's aunt who is the representative payee. The check was certified in February 1981.

The nursing home, where the beneficiary resides, submitted a bill for $1,139 to the payee for maintenance expenses the beneficiary incurred during the period from June 1980 through November 1980. (Maintenance charges for December 1980 through February 1981 had previously been paid.)

Because the benefits were not required for the beneficiary's current maintenance, the payee had previously saved over $500 for the beneficiary and the beneficiary had no foreseeable needs which would require large disbursements, the expenditure for the maintenance charges would be consistent with our guidelines.

[47 FR 30472, July 14, 1982, as amended at 54 FR 35483, Aug. 28, 1989]

§ 404.2040a Compensation for qualified organizations serving as representative payees.

(a) *Organizations that can request compensation.* A qualified organization can request us to authorize it to collect a monthly fee from your benefit payment. A qualified organization is:

(1) Any State or local government agency with fiduciary responsibilities or whose mission is to carry out income maintenance, social service, or health care-related activities; or

(2) Any community-based nonprofit social service organization founded for religious, charitable or social welfare purposes, which is tax exempt under section 501(c) of the Internal Revenue Code and which is bonded/insured to cover misuse and embezzlement by officers and employees and which is licensed in each State in which it serves as representative payee (if licensing is available in the State). The minimum amount of bonding or insurance coverage must equal the average monthly amount of social security payments received by the organization plus the amount of the beneficiaries' conserved funds (*i.e.*, beneficiaries' saved social security benefits) plus interest on hand. For example, an organization that has conserved funds of $5,000 and receives an average of $12,000 a month in social security payments must be bonded/insured for a minimum of $17,000. The license must be appropriate under the laws of the State for the type of services the organization provides. An example of an appropriately licensed organization is a community mental health center holding a State license to provide community mental health services.

(b) *Requirements qualified organizations must meet.* Organizations that are qualified under paragraphs (a)(1) or (a)(2) of this section must also meet the following requirements before we can authorize them to collect a monthly fee.

(1) A qualified organization must regularly provide representative payee services concurrently to at least five beneficiaries. An organization which has received our authorization to collect a fee for representative payee services, but is temporarily (not more than 6 months) not a payee for at least five beneficiaries, may request our approval to continue to collect fees.

(2) A qualified organization must demonstrate that it is not a creditor of the beneficiary. See paragraph (c) of

this section for exceptions to the requirement regarding creditors.

(c) *Creditor relationship.* On a case-by-case basis, we may authorize an organization to collect a fee for payee services despite the creditor relationship. (For example, the creditor is the beneficiary's landlord.) To provide this authorization, we will review all of the evidence submitted by the organization and authorize collection of a fee when:

(1) The creditor services (e.g., providing housing) provided by the organization help to meet the current needs of the beneficiary; and

(2) The amount the organization charges the beneficiary for these services is commensurate with the beneficiary's ability to pay.

(d) *Authorization process.* (1) An organization must request in writing and receive an authorization from us *before* it may collect a fee.

(2) An organization seeking authorization to collect a fee must also give us evidence to show that it is qualified, pursuant to paragraphs (a), (b), and (c) of this section, to collect a fee.

(3) If the evidence provided to us by the organization shows that it meets the requirements of this section, and additional investigation by us proves it suitable to serve, we will notify the organization in writing that it is authorized to collect a fee. If we need more evidence, or if we are not able to authorize the collection of a fee, we will also notify the organization in writing that we have not authorized the collection of a fee.

(e) *Revocation and cancellation of the authorization.* (1) We will revoke an authorization to collect a fee if we have evidence which establishes that an organization no longer meets the requirements of this section. We will issue a written notice to the organization explaining the reason(s) for the revocation.

(2) An organization may cancel its authorization at any time upon written notice to us.

(f) *Notices.* The written notice we will send to an organization authorizing the collection of a fee will contain an effective date for the collection of a fee pursuant to paragraphs (a), (b) and (c) of this section. The effective date will be no earlier than the month in which the organization asked for authorization to collect a fee. The notice will be applicable to all beneficiaries for whom the organization was payee at the time of our authorization and all beneficiaries for whom the organization becomes payee while the authorization is in effect.

(g) *Limitation on fees.* (1) An organization authorized to collect a fee under this section may collect from a beneficiary a monthly fee for expenses (including overhead) it has incurred in providing payee services to a beneficiary. The limit on the fee a qualified organization may collect for providing payee services increases by the same percentage as the annual cost of living adjustment (COLA). The increased fee amount (rounded to the nearest dollar) is taken beginning with the benefit for December (received in January).

(2) Any agreement providing for a fee in excess of the amount permitted shall be void and treated as misuse of your benefits by the organization under § 404.2041.

(3) A fee may be collected for any month during which the organization—

(i) Provides representative payee services;

(ii) Receives a benefit payment for the beneficiary; and

(iii) Is authorized to receive a fee for representative payee services.

(4) Fees for services may not be taken from any funds conserved for the beneficiary by a payee in accordance with § 404.2045.

(5) Generally, an organization may not collect a fee for months in which it does not receive a benefit payment. However, an organization will be allowed to collect a fee for months in which it did not receive a payment if we later issue payment for these months and the organization:

(i) Received our approval to collect a fee for the months for which payment is made;

(ii) Provided payee services in the months for which payment is made; and

(iii) Was the payee when the retroactive payment was paid by us.

(6) Fees for services may not be taken from beneficiary benefits for the months for which we or a court of competent jurisdiction determine(s) that

the representative payee misused benefits. Any fees collected for such months will be treated as a part of the beneficiary's misused benefits.

(7) An authorized organization can collect a fee for providing representative payee services from another source if the total amount of the fee collected from both the beneficiary and the other source does not exceed the amount authorized by us.

[69 FR 60234, Oct. 7, 2004, as amended at 71 FR 61407, Oct. 18, 2006]

§ 404.2041 Who is liable if your representative payee misuses your benefits?

(a) A representative payee who misuses your benefits is responsible for paying back misused benefits. We will make every reasonable effort to obtain restitution of misused benefits so that we can repay these benefits to you.

(b) Whether or not we have obtained restitution from the misuser, we will repay benefits in cases when we determine that a representative payee misused benefits and the representative payee is an organization or an individual payee serving 15 or more beneficiaries. When we make restitution, we will pay you or your alternative representative payee an amount equal to the misused benefits less any amount we collected from the misuser and repaid to you.

(c) Whether or not we have obtained restitution from the misuser, we will repay benefits in cases when we determine that an individual representative payee serving 14 or fewer beneficiaries misused benefits and our negligent failure in the investigation or monitoring of that representative payee results in the misuse. When we make restitution, we will pay you or your alternative representative payee an amount equal to the misused benefits less any amount we collected from the misuser and repaid to you.

(d) The term ''negligent failure'' used in this subpart means that we failed to investigate or monitor a representative payee or that we did investigate or monitor a representative payee but did not follow established procedures in our investigation or monitoring. Examples of our negligent failure include, but are not limited to, the following:

(1) We did not follow our established procedures in this subpart when investigating, appointing, or monitoring a representative payee;

(2) We did not timely investigate a reported allegation of misuse; or

(3) We did not take the necessary steps to prevent the issuance of payments to the representative payee after it was determined that the payee misused benefits.

(e) Our repayment of misused benefits under these provisions does not alter the representative payee's liability and responsibility as described in paragraph (a) of this section.

(f) Any amounts that the representative payee misuses and does not refund will be treated as an overpayment to that representative payee. See subpart F of this part.

[69 FR 60234, Oct. 7, 2004, as amended at 71 FR 61408, Oct. 18, 2006]

§ 404.2045 Conservation and investment of benefit payments.

(a) *General.* After the representative payee has used benefit payments consistent with the guidelines in this subpart (see § 404.2040 regarding use of benefits), any remaining amount shall be conserved or invested on behalf of the beneficiary. Conserved funds should be invested in accordance with the rules followed by trustees. Any investment must show clearly that the payee holds the property in trust for the beneficiary.

Example: A State institution for children with intellectual disability, which is receiving Medicaid funds, is representative payee for several Social Security beneficiaries. The checks the payee receives are deposited into one account which shows that the benefits are held in trust for the beneficiaries. The institution has supporting records which show the share each individual has in the account. Funds from this account are disbursed fairly quickly after receipt for the current support and maintenance of the beneficiaries as well as for miscellaneous needs the beneficiaries may have. Several of the beneficiaries have significant accumulated resources in this account. For those beneficiaries whose benefits have accumulated over $150, the funds should be deposited in an interest-bearing account or invested relatively free of risk on behalf of the beneficiaries.

(b) *Preferred investments.* Preferred investments for excess funds are U.S. Savings Bonds and deposits in an interest or dividend paying account in a bank, trust company, credit union, or savings and loan association which is insured under either Federal or State law. The account must be in a form which shows clearly that the representative payee has only a fiduciary and not a personal interest in the funds. If the payee is the legally appointed guardian or fiduciary of the beneficiary, the account may be established to indicate this relationship. If the payee is not the legally appointed guardian or fiduciary, the accounts may be established as follows:

(1) For U.S. Savings Bonds—

_____ (Name of beneficiary) _____ (Social Security Number), for whom _____ (Name of payee) is representative payee for Social Security benefits;

(2) For interest or dividend paying accounts—

_____ (Name of beneficiary) by _____ (Name of payee), representative payee.

(c) *Interest and dividend payments.* The interest and dividends which result from an investment are the property of the beneficiary and may not be considered to be the property of the payee.

[47 FR 30472, July 14, 1982, as amended at 54 FR 35483, Aug. 28, 1989; 78 FR 46501, Aug. 1, 2013]

§ 404.2050 When will we select a new representative payee for you?

When we learn that your interest is not served by sending your benefit payment to your present representative payee or that your present payee is no longer able or willing to carry out payee responsibilities, we will promptly stop sending your payment to the payee. We will then send your benefit payment to an alternative payee or directly to you, until we find a suitable payee. We may suspend payment as explained in § 404.2011(c) if we find that paying you directly would cause substantial harm and we cannot find a suitable alternative representative payee before your next payment is due. We will terminate payment of benefits to your representative payee and find a new payee or pay you directly if the present payee:

(a) Has been found by us or a court of competent jurisdiction to have misused your benefits;

(b) Has not used the benefit payments on your behalf in accordance with the guidelines in this subpart;

(c) Has not carried out the other responsibilities described in this subpart;

(d) Dies;

(e) No longer wishes to be your payee;

(f) Is unable to manage your benefit payments; or

(g) Fails to cooperate, within a reasonable time, in providing evidence, accounting, or other information we request.

[69 FR 60235, Oct. 7, 2004]

§ 404.2055 When representative payment will be stopped.

If a beneficiary receiving representative payment shows us that he or she is mentally and physically able to manage or direct the management of benefit payments, we will make direct payment. Information which the beneficiary may give us to support his or her request for direct payment include the following—

(a) A physician's statement regarding the beneficiary's condition, or a statement by a medical officer of the institution where the beneficiary is or was confined, showing that the beneficiary is able to manage or direct the management of his or her funds; or

(b) A certified copy of a court order restoring the beneficiary's rights in a case where a beneficiary was adjudged legally incompetent; or

(c) Other evidence which establishes the beneficiary's ability to manage or direct the management of benefits.

§ 404.2060 Transfer of accumulated benefit payments.

A representative payee who has conserved or invested benefit payments shall transfer these funds and the interest earned from the invested funds to either a successor payee, to the beneficiary, or to us, as we will specify. If the funds and the earned interest are returned to us, we will recertify them

to a successor representative payee or to the beneficiary.

[47 FR 30472, July 14, 1982; 47 FR 34781, Aug. 11, 1982, as amended at 75 FR 7552, Feb. 22, 2010]

§ 404.2065 How does your representative payee account for the use of benefits?

Your representative payee must account for the use of your benefits. We require written reports from your representative payee at least once a year (except for certain State institutions that participate in a separate onsite review program). We may verify how your representative payee used your benefits. Your representative payee should keep records of how benefits were used in order to make accounting reports and must make those records available upon our request. If your representative payee fails to provide an annual accounting of benefits or other required reports, we may require your payee to receive your benefits in person at the local Social Security field office or a United States Government facility that we designate serving the area in which you reside. The decision to have your representative payee receive your benefits in person may be based on a variety of reasons. Some of these reasons may include the payee's history of past performance or our past difficulty in contacting the payee. We may ask your representative payee to give us the following information:

(a) Where you lived during the accounting period;

(b) Who made the decisions on how your benefits were spent or saved;

(c) How your benefit payments were used; and

(d) How much of your benefit payments were saved and how the savings were invested.

[69 FR 60235, Oct. 7, 2004, as amended at 71 FR 61408, Oct. 18, 2006]

Subpart V—Payments for Vocational Rehabilitation Services

AUTHORITY: Secs. 205(a), 222, and 702(a)(5) of the Social Security Act (42 U.S.C. 405(a), 422, and 902(a)(5)).

SOURCE: 48 FR 6293, Feb. 10, 1983, unless otherwise noted.

GENERAL PROVISIONS

§ 404.2101 General.

Section 222(d) of the Social Security Act authorizes the transfer from the Federal Old-Age and Survivors Insurance Trust Fund and the Federal Disability Insurance Trust Fund of such sums as may be necessary to pay for the reasonable and necessary costs of vocational rehabilitation (VR) services provided certain disabled individuals entitled under section 223, 225(b), 202(d), 202(e) or 202(f) of the Social Security Act. The purpose of this provision is to make VR services more readily available to disabled individuals and ensure that savings accrue to the Federal Old-Age and Survivors Insurance Trust Fund and the Federal Disability Insurance Trust Fund. Payment will be made for VR services provided on behalf of such an individual in cases where—

(a) The furnishing of the VR services results in the individual's completion of a continuous 9-month period of substantial gainful activity (SGA) as specified in §§ 404.2110 through 404.2111; or

(b) The individual continues to receive disability payments from us, even though his or her disability has ceased, because of his or her continued participation in an approved VR program which we have determined will increase the likelihood that he or she will not return to the disability rolls (*see* § 404.2112).

[68 FR 40123, July 7, 2003]

§ 404.2102 Purpose and scope.

This subpart describes the rules under which the Commissioner will pay the State VR agencies or alternate participants for VR services. Payment will be provided for VR services provided on behalf of disabled individuals under one or more of the provisions discussed in § 404.2101.

(a) Sections 404.2101 through 404.2103 describe the purpose of these regulations and the meaning of terms we frequently use in them.

(b) Section 404.2104 explains how State VR agencies or alternate participants may participate in the payment program under this subpart.

(c) Section 404.2106 describes the basic qualifications for alternate participants.

(d) Sections 404.2108 through 404.2109 describe the requirements and conditions under which we will pay a State VR agency or alternate participant under this subpart.

(e) Sections 404.2110 through 404.2111 describe when an individual has completed a continuous period of SGA and when VR services will be considered to have contributed to that period.

(f) Section 404.2112 describes when payment will be made to a VR agency or alternate participant because an individual's disability benefits are continued based on his or her participation in a VR program which we have determined will increase the likelihood that he or she will not return to the disability rolls.

(g) Sections 404.2114 through 404.2115 describe services for which payment will be made.

(h) Section 404.2116 describes the filing deadlines for claims for payment for VR services.

(i) Section 404.2117 describes the payment conditions.

(j) Section 404.2118 describes the applicability of these regulations to alternate participants.

(k) Section 404.2119 describes how we will make payment to State VR agencies or alternate participants for rehabilitation services.

(l) Sections 404.2120 and 404.2121 describe the audits and the prepayment and postpayment validation reviews we will conduct.

(m) Section 404.2122 discusses confidentiality of information and records.

(n) Section 404.2123 provides for the applicability of other Federal laws and regulations.

(o) Section 404.2127 provides for the resolution of disputes.

[48 FR 6293, Feb. 10, 1983, as amended at 55 FR 8454, Mar. 8, 1990; 59 FR 11912, Mar. 15, 1994; 62 FR 38452, July 18, 1997; 68 FR 40123, July 7, 2003]

§ 404.2103 Definitions.

For purposes of this subpart:

Accept the beneficiary as a client for VR services means that the State VR agency determines that the individual is eligible for VR services and places the individual into an active caseload status for development of an individualized written rehabilitation program.

Act means the Social Security Act, as amended.

Alternate participants means any public or private agencies (except participating State VR agencies (see § 404.2104)), organizations, institutions, or individuals with whom the Commissioner has entered into an agreement or contract to provide VR services.

Commissioner means the Commissioner of Social Security or the Commissioner's designee.

Disability means ''disability'' or ''blindness'' as defined in sections 216(i) and 223 of the Act.

Disability beneficiary means a disabled individual who is entitled to benefits under section 223, 202(d), 202(e) or 202(f) of the act or is continuing to receive payment under section 225(b) of the Act after his or her disabling physical or mental impairments have ceased.

Medical recovery for purposes of this subpart is established when a beneficiary's disability entitlement ceases for any medical reason (other than death). The determination of medical recovery is made by the Commissioner in deciding a beneficiary's continuing entitlement to benefits.

Place the beneficiary into an extended evaluation process means that the State VR agency determines that an extended evaluation of the individual's VR potential is necessary to determine whether the individual is eligible for VR services and places the individual into an extended evaluation status.

SGA means substantial gainful activity performed by an individual as defined in §§ 404.1571 through 404.1575 or § 404.1584 of this subpart.

State means any of the 50 States of the United States, the Commonwealth of Puerto Rico, the District of Columbia, the Virgin Islands, or Guam. It includes the State VR agency.

Trust Funds means the Federal Old-Age and Survivors Insurance Trust Fund and the Federal Disability Insurance Trust Fund.

Vocational rehabilitation services has the meaning assigned to it under title I of the Rehabilitation Act of 1973.

VR agency means an agency of the State which has been designated by the

State to provide vocational rehabilitation services under title I of the Rehabilitation Act of 1973.

Waiting period means a five consecutive calendar month period throughout which an individual must be under a disability and which must be served before disability benefits can be paid (see § 404.315(d)).

We, us and our refer to the Social Security Administration (SSA).

[48 FR 6293, Feb. 10, 1983, as amended at 55 FR 8454, Mar. 8, 1990; 59 FR 11912, Mar. 15, 1994; 62 FR 38452, July 18, 1997; 68 FR 40123, July 7, 2003]

§ 404.2104 Participation by State VR agencies or alternate participants.

(a) *General.* In order to participate in the payment program under this subpart through its VR agency(ies), a State must have a plan which meets the requirements of title I of the Rehabilitation Act of 1973, as amended. An alternate participant must have a similar plan and otherwise qualify under § 404.2106.

(b) *Participation by States.* (1) The opportunity to participate through its VR agency(ies) with respect to disability beneficiaries in the State will be offered first to the State in accordance with paragraph (c) of this section, unless the State has notified us in advance under paragraph (e)(1) of this section of its decision not to participate or to limit such participation.

(2) A State with one or more approved VR agencies may choose to limit participation of those agencies to a certain class(es) of disability beneficiaries. For example, a State with separate VR agencies for the blind and disabled may choose to limit participation to the VR agency for the blind. In such a case, we would give the State, through its VR agency for the blind, the opportunity to participate with respect to blind disability beneficiaries in the State in accordance with paragraph (d) of this section. We would arrange for VR services for non-blind disability beneficiaries in the State through an alternate participant(s). A State that chooses to limit participation of its VR agency(ies) must notify us in advance under paragraph (e)(1) of this section of its decision to limit such participation.

(3) If a State chooses to participate by using a State agency other than a VR agency with a plan for VR services approved under title I of the Rehabilitation Act of 1973, as amended, that State agency may participate only as an alternate participant.

(c) *Opportunity for participation through State VR agencies.* (1) Unless a State has decided not to participate or to limit participation, we will give the State the opportunity to participate through its VR agency(ies) with respect to disability beneficiaries in the State by referring such beneficiaries first to the State VR agency(ies) for necessary VR services. A State, through its VR agency(ies), may participate with respect to any beneficiary so referred by accepting the beneficiary as a client for VR services or placing the beneficiary into an extended evaluation process and notifying us under paragraph (c)(2) of this section of such acceptance or placement.

(2)(i) In order for the State to participate with respect to a disability beneficiary whom we referred to a State VR agency, the State VR agency must notify the appropriate Regional Commissioner (SSA) in writing or through electronic notification of its decision either to accept the beneficiary as a client for VR services or to place the beneficiary into an extended evaluation process. The notice must be received by the appropriate Regional Commissioner (SSA) no later than the close of the fourth month following the month in which we referred the beneficiary to the State VR agency. If we do not receive such notice with respect to a beneficiary whom we referred to the State VR agency, we may arrange for VR services for that beneficiary through an alternate participant.

(ii) In any case in which a State VR agency notifies the appropriate Regional Commissioner (SSA) in writing within the stated time period under paragraph (c)(2)(i) of this section of its decision to place the beneficiary into an extended evaluation process, the State VR agency also must notify that Regional Commissioner in writing upon completion of the evaluation of its decision whether or not to accept

the beneficiary as a client for VR services. If we receive a notice of a decision by the State VR agency to accept the beneficiary as a client for VR services following the completion of the extended evaluation, the State may continue to participate with respect to such beneficiary. If we receive a notice of a decision by the State VR agency not to accept the beneficiary as a client for VR services following the completion of the extended evaluation, we may arrange for VR services for that beneficiary through an alternate participant.

(d) *Opportunity for limited participation through State VR agencies.* If a State has decided under paragraph (e)(1) of this section to limit participation of its VR agency(ies) to a certain class(es) of disability beneficiaries in the State, we will give the State the opportunity to participate with respect to such class(es) of disability beneficiaries by referring such beneficiaries first to the State VR agency(ies) for necessary VR services. The State, through its VR agency(ies), may participate with respect to any beneficiary so referred by accepting the beneficiary as a client for VR services or placing the beneficiary into an extended evaluation process and notifying us under paragraph (c)(2) of this section of such acceptance or placement.

(e) *Decision of a State not to participate or to limit participation.* (1) A State may choose not to participate through its VR agency(ies) with respect to any disability beneficiaries in the State, or it may choose to limit participation of its VR agency(ies) to a certain class(es) of disability beneficiaries in the State. A State which decides not to participate or to limit participation must provide advance written notice of that decision to the appropriate Regional Commissioner (SSA). Unless a State specifies a later month, a decision not to participate or to limit participation will be effective beginning with the third month following the month in which the notice of the decision is received by the appropriate Regional Commissioner (SSA). The notice of the State decision must be submitted by an official authorized to act for the State for this purpose. A State must provide to the appropriate Regional Commissioner (SSA) an opinion from the State's Attorney General verifying the authority of the official who sent the notice to act for the State. This opinion will not be necessary if the notice is signed by the Governor of the State.

(2)(i) If a State has decided not to participate through its VR agency(ies), we may arrange for VR services through an alternate participant(s) for disability beneficiaries in the State.

(ii) If a State has decided to limit participation of its VR agency(ies) to a certain class(es) of disability beneficiaries, we may arrange for VR services through an alternate participant(s) for the class(es) of disability beneficiaries in the State excluded from the scope of the State's participation.

(3) A State which has decided not to participate or to limit participation may participate later through its VR agency(ies) in accordance with paragraph (c) of this section, provided that such participation will not conflict with any previous commitment which we may have made to an alternate participant(s) under paragraph (e)(2) of this section. A State which decides to resume participation under paragraph (c) of this section must provide advance written notice of that decision to the appropriate Regional Commissioner (SSA). Unless a commitment to an alternate participant(s) requires otherwise, a decision of a State to resume participation under paragraph (c) of this section will be effective beginning with the third month following the month in which the notice of the decision is received by the appropriate Regional Commissioner (SSA) or, if later, with a month specified by the State. The notice of the State decision must be submitted by an official authorized to act for the State as explained in paragraph (e)(1) of this section.

(f) *Use of alternate participants.* The Commissioner, by written agreement or contract, may arrange for VR services through an alternate participant(s) for any disability beneficiary in the State with respect to whom the State is unwilling to participate through its VR agency(ies). In such a case, we may refer the beneficiary to

such alternate participant for necessary VR services. The Commissioner will find that a State is unwilling to participate with respect to any of the following disability beneficiaries in that State:

(1) A disability beneficiary whom we referred to a State VR agency under paragraph (c) or (d) of this section if we do not receive a notice within the stated time period under paragraph (c)(2)(i) of this section of a decision by the VR agency either to accept the beneficiary as a client for VR services or to place the beneficiary into an extended evaluation process;

(2) A disability beneficiary with respect to whom we receive a notice under paragraph (c)(2)(ii) of this section of a decision by the VR agency not to accept the beneficiary as a client for VR services following the completion of the extended evaluation;

(3) The class(es) of disability beneficiaries excluded from the scope of the State's participation if the State has decided to limit participation of its VR agency(ies); and

(4) All disability beneficiaries in the State if the State has decided not to participate through its VR agency(ies).

[59 FR 11912, Mar. 15, 1994]

§ 404.2106 Basic qualifications for alternate participants.

(a) *General*. We may arrange for VR services through an alternate participant by written agreement or contract as explained in § 404.2104(f). An alternate participant may be a public or private agency, organization, institution or individual (that is, any entity whether for-profit or not-for-profit), other than a State VR agency.

(1) An alternate participant must—

(i) Be licensed, certified, accredited, or registered, as appropriate, to provide VR services in the State in which it provides services; and

(ii) Under the terms of the written contract or agreement, have a plan similar to the State plan described in § 404.2104(a) which shall govern the provision of VR services to individuals.

(2) We will not use as an alternate participant any agency, organization, institution, or individual—

(i) Whose license, accreditation, certification, or registration is suspended or revoked for reasons concerning professional competence or conduct or financial integrity;

(ii) Who has surrendered such license, accreditation, certification, or registration pending a final determination of a formal disciplinary proceeding; or

(iii) Who is precluded from Federal procurement or nonprocurement programs.

(b) *Standards for the provision of VR services*. An alternate participant's plan must provide, among other things, that the provision of VR services to individuals will meet certain minimum standards, including, but not limited to, the following:

(1) All medical and related health services furnished will be prescribed by, or provided under the formal supervision of, persons licensed to prescribe or supervise the provision of these services in the State;

(2) Only qualified personnel and rehabilitation facilities will be used to furnish VR services; and

(3) No personnel or rehabilitation facility described in paragraph (a)(2) (i), (ii), or (iii) of this section will be used to provide VR services.

[59 FR 11914, Mar. 15, 1994]

PAYMENT PROVISIONS

§ 404.2108 Requirements for payment.

(a) The State VR agency or alternate participant must file a claim for payment in each individual case within the time periods specified in § 404.2116;

(b) The claim for payment must be in a form prescribed by us and contain the following information:

(1) A description of each service provided;

(2) When the service was provided; and

(3) The cost of the service;

(c) The VR services for which payment is being requested must have been provided during the period specified in § 404.2115;

(d) The VR services for which payment is being requested must have been provided under a State plan for VR services approved under title I of the Rehabilitation Act of 1973, as amended, or, in the case of an alternate participant, under a negotiated plan,

and must be services that are described in § 404.2114;

(e) The individual must meet one of the VR payment provisions specified in § 404.2101;

(f) The State VR agency or alternate participant must maintain, and provide as we may require, adequate documentation of all services and costs for all disability beneficiaries with respect to whom a State VR agency or alternate participant could potentially request payment for services and costs under this subpart; and

(g) The amount to be paid must be reasonable and necessary and be in compliance with the cost guidelines specified in § 404.2117.

[48 FR 6293, Feb. 10, 1983, as amended at 55 FR 8454, Mar. 8, 1990; 59 FR 11914, Mar. 15, 1994]

§ 404.2109 Responsibility for making payment decisions.

The Commissioner will decide—

(a) Whether a continuous period of 9 months of SGA has been completed;

(b) Whether a disability beneficiary whose disability has ceased should continue to receive benefits under § 404.316(c), 404.337(c), or 404.352(c) for a month after October 1984, based on his or her continued participation in a VR program;

(c) If and when medical recovery has occurred;

(d) Whether documentation of VR services and expenditures is adequate;

(e) If payment is to be based on completion of a continuous 9-month period of SGA, whether the VR services contributed to the continuous period of SGA;

(f) Whether a VR service is a service described in § 404.2114; and

(g) What VR costs were reasonable and necessary and will be paid.

[55 FR 8454, Mar. 8, 1990, as amended at 59 FR 11914, Mar. 15, 1994; 68 FR 40123, July 7, 2003]

§ 404.2110 What we mean by "SGA" and by "a continuous period of 9 months".

(a) *What we mean by ''SGA''.* In determining whether an individual's work is SGA, we will follow the rules in §§ 404.1572 through 404.1575. We will follow these same rules for individuals who are statutorily blind, but we will evaluate the earnings in accordance with the rules in § 404.1584(d).

(b) *What we mean by ''a continuous period of 9 months''.* A continuous period of 9 months ordinarily means a period of 9 consecutive calendar months. Exception: When an individual does not perform SGA in 9 consecutive calendar months, he or she will be considered to have done so if—

(1) The individual performs 9 months of SGA within 10 consecutive months and has monthly earnings that meet or exceed the guidelines in § 404.1574(b)(2), or § 404.1584(d) if the individual is statutorily blind; or

(2) The individual performs at least 9 months of SGA within 12 consecutive months, and the reason for not performing SGA in 2 or 3 of those months was due to circumstances beyond his or her control and unrelated to the impairment (e.g., the employer closed down for 3 months).

(c) *What work we consider.* In determining if a continuous period of SGA has been completed, all of an individual's work activity may be evaluated for purposes of this section, including work performed before October 1981, during the waiting period, during the trial work period and after entitlement to disability benefits terminated. We will ordinarily consider only the first 9 months of SGA that occur. The exception will be if an individual who completed 9 months of SGA later stops performing SGA, receives VR services and then performs SGA for a 9-month period. See § 404.2115 for the use of the continuous period in determining payment for VR services.

[48 FR 6293, Feb. 10, 1983, as amended at 55 FR 8454, Mar. 8, 1990]

§ 404.2111 Criteria for determining when VR services will be considered to have contributed to a continuous period of 9 months.

The State VR agency or alternate participant may be paid for VR services if such services contribute to the individual's performance of a continuous 9-month period of SGA. The following criteria apply to individuals who received more than just evaluation services. If a State VR agency or alternate participant claims payment for services to an individual who received

only evaluation services, it must establish that the individual's continuous period or medical recovery (if medical recovery occurred before completion of a continuous period) would not have occurred without the services provided. In applying the criteria below, we will consider services described in § 404.2114 that were initiated, coordinated or provided, including services before October 1, 1981.

(a) *Continuous period without medical recovery*. If an individual who has completed a ''continuous period'' of SGA has not medically recovered as of the date of completion of the period, the determination as to whether VR services contributed will depend on whether the continuous period began one year or less after VR services ended or more than one year after VR services ended.

(1) *One year or less*. Any VR services which significantly motivated or assisted the individual in returning to, or continuing in, SGA will be considered to have contributed to the continuous period.

(2) *More than one year*. (i) If the continuous period was preceded by transitional work activity (employment or self-employment which gradually evolved, with or without periodic interruption, into SGA), and that work activity began less than a year after VR services ended, any VR services which significantly motivated or assisted the individual in returning to, or continuing in, SGA will be considered to have contributed to the continuous period.

(ii) If the continuous period was not preceded by transitional work activity that began less than a year after VR services ended, VR services will be considered to have contributed to the continuous period only if it is reasonable to conclude that the work activity which constitutes a continuous period could not have occurred without the VR services (e.g., training).

(b) *Continuous period with medical recovery occurring before completion*. (1) If an individual medically recovers before a continuous period has been completed, VR services under paragraph (a) of this section will not be payable unless some VR services contributed to the medical recovery. VR services will be considered to have contributed to the medical recovery if—

(i) The individualized written rehabilitation program (IWRP) or, in the case of an alternate participant, a similar document, included medical services; and

(ii) The medical recovery occurred, at least in part, because of these medical services. (For example, the individual's medical recovery was based on improvement in a back condition which, at least in part, stemmed from surgery initiated, coordinated or provided under an IWRP).

(2) In some instances, the State VR agency or alternate participant will not have provided, initiated, or coordinated medical services. If this happens, payment for VR services may still be possible under paragraph (a) of this section if: (i) The medical recovery was not expected by us; and (ii) the individual's impairment is determined by us to be of such a nature that any medical services provided would not ordinarily have resulted in, or contributed to, the medical cessation.

[48 FR 6293, Feb. 10, 1983, as amended at 59 FR 11914, Mar. 15, 1994]

§ 404.2112 Payment for VR services in a case where an individual continues to receive disability payments based on participation in an approved VR program.

Sections 404.1586(g), 404.316(c), 404.337(c), and 404.352(c) explain the criteria we will use in determining if an individual whose disability has ceased should continue to receive disability benefits from us because of his or her continued participation in a VR program. A VR agency or alternate participant can be paid for the cost of VR services provided to an individual if the individual was receiving benefits in a month or months, after October 1984, based on § 404.316(c), 404.337(c), or 404.352(c). If this requirement is met, a VR agency or alternate participant can be paid for the costs of VR services provided within the period specified in § 404.2115, subject to the other payment and administrative provisions of this subpart.

[55 FR 8455, Mar. 8, 1990]

§ 404.2114 Services for which payment may be made.

(a) *General.* Payment may be made for VR services provided by a State VR agency in accordance with title I of the Rehabilitation Act of 1973, as amended, or by an alternate participant under a negotiated plan, subject to the limitations and conditions in this subpart. VR services for which payment may be made under this subpart include only those services described in paragraph (b) of this section which are—

(1) Necessary to determine an individual's eligibility for VR services or the nature and scope of the services to be provided; or

(2) Provided by a State VR agency under an IWRP, or by an alternate participant under a similar document, but only if the services could reasonably be expected to motivate or assist the individual in returning to, or continuing in, SGA.

(b) *Specific services.* Payment may be made under this subpart only for the following VR services:

(1) An assessment for determining an individual's eligibility for VR services and vocational rehabilitation needs by qualified personnel, including, if appropriate, an assessment by personnel skilled in rehabilitation technology, and which includes determining—

(i) The nature and extent of the physical or mental impairment(s) and the resultant impact on the individual's employability;

(ii) The likelihood that an individual will benefit from vocational rehabilitation services in terms of employability; and

(iii) An employment goal consistent with the capacities of the individual and employment opportunities;

(2) Counseling and guidance, including personal adjustment counseling, and those referrals and other services necessary to help an individual secure needed services from other agencies;

(3) Physical and mental restoration services necessary to correct or substantially modify a physical or mental condition which is stable or slowly progressive and which constitutes an impediment to suitable employment at or above the SGA level;

(4) Vocational and other training services, including personal and vocational adjustment, books, tools, and other training materials, except that training or training services in institutions of higher education will be covered under this section only if maximum efforts have been made by the State VR agency or alternate participant to secure grant assistance in whole or in part from other sources;

(5) Maintenance expenses that are extra living expenses over and above the individual's normal living expenses and that are incurred solely because of and while the individual is participating in the VR program and that are necessary in order for the individual to benefit from other necessary VR services;

(6) Travel and related expenses necessary to transport an individual for purpose of enabling the individual's participation in other necessary VR services;

(7) Services to family members of a disabled individual only if necessary to the successful vocational rehabilitation of that individual;

(8) Interpreter services and note-taking services for an individual who is deaf and tactile interpreting for an individual who is deaf and blind;

(9) Reader services, rehabilitation teaching services, note-taking services, and orientation and mobility services for an individual who is blind;

(10) Telecommunications, sensory, and other technological aids and devices;

(11) Work-related placement services to secure suitable employment;

(12) Post-employment services necessary to maintain, regain or advance into suitable employment at or above the SGA level;

(13) Occupational licenses, tools, equipment, initial stocks, and supplies;

(14) Rehabilitation technology services; and

(15) Other goods and services that can reasonably be expected to motivate or assist the individual in returning to, or continuing in, SGA.

[59 FR 11915, Mar. 15, 1994]

§ 404.2115 When services must have been provided.

(a) In order for the VR agency or alternate participant to be paid, the services must have been provided—

(1) After September 30, 1981;

(2) No earlier than the beginning of the waiting period or the first month of entitlement, if no waiting period is required; and

(3) Before completion of a continuous 9-month period of SGA or termination of entitlement to disability benefits, whichever occurs first.

(b) If an individual who is entitled to disability benefits under this part also is or has been receiving disability or blindness benefits under part 416 of this chapter, the determination as to when services must have been provided may be made under this section or § 416.2215 of this chapter, whichever is advantageous to the State VR agency or alternate participant that is participating in both VR programs.

[55 FR 8455, Mar. 8, 1990, as amended at 61 FR 31025, June 19, 1996]

§ 404.2116 When claims for payment for VR services must be made (filing deadlines).

The State VR agency or alternate participant must file a claim for payment in each individual case within the following time periods:

(a) A claim for payment for VR services based on the individual's completion of a continuous 9-month period of SGA must be filed within 12 months after the month in which the continuous 9-month period of SGA is completed.

(b) A claim for payment for VR services provided to an individual whose disability benefits were continued after disability has ceased because of that individual's continued participation in a VR program must be filed as follows:

(1) If a written notice requesting that a claim be filed was sent to the State VR agency or alternate participant, a claim must be filed within 90 days following the month in which VR services end, or if later, within 90 days after receipt of the notice.

(2) If no written notice was sent to the State VR agency or alternate participant, a claim must be filed within 12 months after the month in which VR services end.

[55 FR 8455, Mar. 8, 1990, as amended at 61 FR 31025, June 19, 1996; 68 FR 40124, July 7, 2003]

§ 404.2117 What costs will be paid.

In accordance with section 222(d) of the Social Security Act, the Commissioner will pay the State VR agency or alternate participant for the VR services described in § 404.2114 which were provided during the period described in § 404.2115 and which meet the criteria in § 404.2111 or § 404.2112, but subject to the following limitations:

(a) The cost must have been incurred by the State VR agency or alternate participant;

(b) The cost must not have been paid or be payable from some other source. For this purpose, State VR agencies or alternate participants will be required to seek payment or services from other sources in accordance with the ''similar benefit'' provisions under 34 CFR part 361, including making maximum efforts to secure grant assistance in whole or part from other sources for training or training services in institutions of higher education. Alternate participants will not be required to consider State VR services a similar benefit.

(c)(1) The cost must be reasonable and necessary, in that it complies with the written cost-containment policies of the State VR agency or, in the case of an alternate participant, it complies with similar written policies established under a negotiated plan. A cost which complies with these policies will be considered necessary only if the cost is for a VR service described in § 404.2114. The State VR agency or alternate participant must maintain and use these cost-containment policies, including any reasonable and appropriate fee schedules, to govern the costs incurred for all VR services, including the rates of payment for all purchased services, for which payment will be requested under this subpart. For the purpose of this subpart, the written cost-containment policies must provide guidelines designed to ensure—

(i) The lowest reasonable cost for such services; and

(ii) Sufficient flexibility so as to allow for an individual's needs.

(2) The State VR agency shall submit to us before the end of the first calendar quarter of each year a written

statement certifying that cost-containment policies are in effect and are adhered to in procuring and providing goods and services for which the State VR agency requests payment under this subpart. Such certification must be signed by the State's chief financial official or the head of the VR agency. Each certification must specify the basis upon which it is made, e.g., a recent audit by an authorized State, Federal or private auditor (or other independent compliance review) and the date of such audit (or compliance review). In the case of an alternate participant, these certification requirements shall be incorporated into the negotiated agreement or contract. We may request the State VR agency or alternate participant to submit to us a copy(ies) of its specific written cost-containment policies and procedures (e.g., any guidelines and fee schedules for a given year) if we determine that such additional information is necessary to ensure compliance with the requirements of this subpart. The State VR agency or alternate participant shall provide such information when requested by us.

(d) The total payment in each case, including any prior payments related to earlier continuous 9-month periods of SGA made under this subpart, must not be so high as to preclude a ''net saving'' to the trust funds (a ''net saving'' is the difference between the estimated saving to the trust funds, if disability benefits eventually terminate, and the total amount we pay to the State VR agency or alternate participant);

(e) Any payment to the State VR agency for either direct or indirect VR expenses must be consistent with the cost principles described in OMB Circular No. A–87, published at 46 FR 9548 on January 28, 1981 (see § 404.2118(a) for cost principles applicable to alternate participants);

(f) Payment for VR services or costs may be made under more than one of the VR payment provisions described in §§ 404.2111 and 404.2112 of this subpart and similar provisions in §§ 416.2211 and 416.2212 of subpart V of part 416. However, payment will not be made more than once for the same VR service or cost; and

(g) Payment will be made for administrative costs and for counseling and placement costs. This payment may be on a formula basis, or on an actual cost basis, whichever the State VR agency prefers. The formula will be negotiated. The payment will also be subject to the preceding limitations.

[48 FR 6293, Feb. 10, 1983. Redesignated and amended at 55 FR 8454, 8455, Mar. 8, 1990; 59 FR 11915, Mar. 15, 1994; 62 FR 38452, July 18, 1997; 68 FR 40124, July 7, 2003]

ADMINISTRATIVE PROVISIONS

§ 404.2118 Applicability of these provisions to alternate participants.

When an alternate participant provides rehabilitation services under this subpart, the payment procedures stated herein shall apply except that:

(a) Payment must be consistent with the cost principles described in 45 CFR part 74 or 41 CFR parts 1–15 as appropriate; and

(b) Any disputes, including appeals of audit determinations, shall be resolved in accordance with applicable statutes and regulations which will be specified in the negotiated agreement or contract.

[48 FR 6293, Feb. 10, 1983. Redesignated at 55 FR 8454, Mar. 8, 1990]

§ 404.2119 Method of payment.

Payment to the State VR agencies or alternate participants pursuant to this subpart will be made either by advancement of funds or by payment for services provided (with necessary adjustments for any overpayments and underpayments), as decided by the Commissioner.

[55 FR 8455, Mar. 8, 1990]

§ 404.2120 Audits.

(a) *General.* The State or alternate participant shall permit us and the Comptroller General of the United States (including duly authorized representatives) access to and the right to examine records relating to the services and costs for which payment was requested or made under these regulations. These records shall be retained by the State or alternate participant

for the periods of time specified for retention of records in the Federal Procurement Regulations (41 CFR parts 1–20).

(b) *Audit basis.* Auditing will be based on cost principles and written guidelines in effect at the time services were provided and costs were incurred. The State VR agency or alternate participant will be informed and given a full explanation of any questioned items. It will be given a reasonable time to explain questioned items. Any explanation furnished by the State VR agency or alternate participant will be given full consideration before a final determination is made on questioned items in the audit report.

(c) *Appeal of audit determinations.* The appropriate SSA Regional Commissioner will notify the State VR agency or alternate participant in writing of his or her final determination on the audit report. If the State VR agency (see § 404.2118(b) for alternate participants) disagrees with that determination, it may request reconsideration in writing within 60 days after receiving the Regional Commissioner's notice of the determination. The Commissioner will make a determination and notify the State VR agency of that decision in writing, usually, no later than 45 days from the date of appeal. The decision by the Commissioner will be final and conclusive unless the State VR agency appeals that decision in writing in accordance with 45 CFR part 16 to the Department of Health and Human Services' Departmental Appeals Board within 30 days after receiving it.

[48 FR 6293, Feb. 10, 1983, as amended at 55 FR 8456, Mar. 8, 1990; 62 FR 38452, July 18, 1997]

§ 404.2121 Validation reviews.

(a) *General.* We will conduct a validation review of a sample of the claims for payment filed by each State VR agency or alternate participant. We will conduct some of these reviews on a prepayment basis and some on a postpayment basis. We may review a specific claim, a sample of the claims, or all the claims filed by any State VR agency or alternate participant, if we determine that such review is necessary to ensure compliance with the requirements of this subpart. For each claim selected for review, the State VR agency or alternate participant must submit such records of the VR services and costs for which payment has been requested or made under this subpart, or copies of such records, as we may require to ensure that the services and costs meet the requirements for payment. For claims for cases described in § 404.2101(a), a clear explanation or existing documentation which demonstrates how the service contributed to the individual's performance of a continuous 9-month period of SGA must be provided. For claims for cases described in § 404.2101 (b) or (c), a clear explanation or existing documentation which demonstrates how the service was reasonably expected to motivate or assist the individual to return to or continue in SGA must be provided. If we find in any prepayment validation review, that the scope or content of the information is inadequate, we will request additional information and will withhold payment until adequate information has been provided. The State VR agency or alternate participant shall permit us (including duly authorized representatives) access to, and the right to examine, any records relating to such services and costs. Any review performed under this section will not be considered an audit for purposes of this subpart.

(b) *Purpose.* The primary purpose of these reviews is—

(1) To ensure that the VR services and costs meet the requirements for payment under this subpart;

(2) To assess the validity of our documentation requirements; and

(3) To assess the need for additional validation reviews or additional documentation requirements for any State VR agency or alternate participant to ensure compliance with the requirements under this subpart.

(c) *Determinations.* In any validation review, we will determine whether the VR services and costs meet the requirements for payment and determine the amount of payment. We will notify in writing the State VR agency or alternate participant of our determination. If we find in any postpayment validation review that more or less than the correct amount of payment was made for a claim, we will determine that an

overpayment or underpayment has occurred and will notify the State VR agency or alternate participant that we will make the appropriate adjustment.

(d) *Appeals*. If the State VR agency or alternate participant disagrees with our determination under this section, it may appeal that determination in accordance with § 404.2127. For purposes of this section, an appeal must be filed within 60 days after receiving the notice of our determination.

[59 FR 11916, Mar. 15, 1994]

§ 404.2122 Confidentiality of information and records.

The State or alternate participant shall comply with the provisions for confidentiality of information, including the security of systems, and records requirements described in 20 CFR part 401 and pertinent written guidelines (see § 404.2123).

§ 404.2123 Other Federal laws and regulations.

Each State VR agency and alternate participant shall comply with the provisions of other Federal laws and regulations that directly affect its responsibilities in carrying out the vocational rehabilitation function.

§ 404.2127 Resolution of disputes.

(a) *Disputes on the amount to be paid*. The appropriate SSA official will notify the State VR agency or alternative participant in writing of his or her determination concerning the amount to be paid. If the State VR agency (see § 404.2118(b) for alternate participants) disagrees with that determination, the State VR agency may request reconsideration in writing within 60 days after receiving the notice of determination. The Commissioner will make a determination and notify the State VR agency of that decision in writing, usually no later than 45 days from the date of the State VR agency's appeal. The decision by the Commissioner will be final and conclusive upon the State VR agency unless the State VR agency appeals that decision in writing in accordance with 45 CFR part 16 to the Department of Health and Human Services' Departmental Appeals Board within 30 days after receiving the Commissioner's decision.

(b) *Disputes on whether there was a continuous period of SGA and whether VR services contributed to a continuous period of SGA*. The rules in paragraph (a) of this section will apply, except that the Commissioner's decision will be final and conclusive. There is no right of appeal to the Departmental Appeals Board.

(c) *Disputes on determinations made by the Commissioner which affect a disability beneficiary's rights to benefits*. Determinations made by the Commissioner which affect an individual's right to benefits (e.g., determinations that disability benefits should be terminated, denied, suspended, continued or begun at a different date than alleged) cannot be appealed by a State VR agency or alternate participant. Because these determinations are an integral part of the disability benefits claims process, they can only be appealed by the beneficiary or applicant whose rights are affected or by his or her authorized representative. However, if an appeal of an unfavorable determination is made by the individual and is successful, the new determination would also apply for purposes of this subpart. While a VR agency or alternate participant cannot appeal a determination made by the Commissioner which affects a beneficiary's or applicant's rights, the VR agency can furnish any evidence it may have which would support a revision of a determination.

[48 FR 6293, Feb. 10, 1983, as amended at 55 FR 8456, Mar. 8, 1990; 62 FR 38452, July 18, 1997]

PART 405—ADMINISTRATIVE REVIEW PROCESS FOR ADJUDICATING INITIAL DISABILITY CLAIMS

Subpart A—Introduction, General Description, and Definitions

Sec.
405.1 Introduction.
405.5 Definitions.
405.10 [Reserved]
405.20 Good cause for extending deadlines.
405.25 Disqualification of disability adjudicators.
405.30 Discrimination complaints.