AUTHENTICATED
U.S. GOVERNMENT
INFORMATION
GPO

CODE OF FEDERAL REGULATIONS

Title 26
Internal Revenue

Part 1 (§§ 1.1401 to 1.1550)

Revised as of April 1, 2015

Containing a codification of documents
of general applicability and future effect

As of April 1, 2015

Published by the Office of the Federal Register
National Archives and Records Administration
as a Special Edition of the Federal Register

U.S. GOVERNMENT OFFICIAL EDITION NOTICE

Legal Status and Use of Seals and Logos

The seal of the National Archives and Records Administration (NARA) authenticates the Code of Federal Regulations (CFR) as the official codification of Federal regulations established under the Federal Register Act. Under the provisions of 44 U.S.C. 1507, the contents of the CFR, a special edition of the Federal Register, shall be judicially noticed. The CFR is prima facie evidence of the original documents published in the Federal Register (44 U.S.C. 1510).

It is prohibited to use NARA's official seal and the stylized Code of Federal Regulations logo on any republication of this material without the express, written permission of the Archivist of the United States or the Archivist's designee. Any person using NARA's official seals and logos in a manner inconsistent with the provisions of 36 CFR part 1200 is subject to the penalties specified in 18 U.S.C. 506, 701, and 1017.

Use of ISBN Prefix

This is the Official U.S. Government edition of this publication and is herein identified to certify its authenticity. Use of the 0–16 ISBN prefix is for U.S. Government Publishing Office Official Editions only. The Superintendent of Documents of the U.S. Government Publishing Office requests that any reprinted edition clearly be labeled as a copy of the authentic work with a new ISBN.

GPO U.S. GOVERNMENT PUBLISHING OFFICE

U.S. Superintendent of Documents • Washington, DC 20402–0001

http://bookstore.gpo.gov

Phone: toll-free (866) 512-1800; DC area (202) 512-1800

Table of Contents

	Page
Explanation	v
Title 26:	
Chapter I—Internal Revenue Service, Department of the Treasury (Continued)	3
Finding Aids:	
Table of CFR Titles and Chapters	1043
Alphabetical List of Agencies Appearing in the CFR	1063
Table of OMB Control Numbers	1073
List of CFR Sections Affected	1091

Cite this Code: CFR

To cite the regulations in this volume use title, part and section number. Thus, 26 CFR 1.1401–1 *refers to title 26, part 1, section 1401–1.*

Explanation

The Code of Federal Regulations is a codification of the general and permanent rules published in the Federal Register by the Executive departments and agencies of the Federal Government. The Code is divided into 50 titles which represent broad areas subject to Federal regulation. Each title is divided into chapters which usually bear the name of the issuing agency. Each chapter is further subdivided into parts covering specific regulatory areas.

Each volume of the Code is revised at least once each calendar year and issued on a quarterly basis approximately as follows:

Title 1 through Title 16.....as of January 1
Title 17 through Title 27.....as of April 1
Title 28 through Title 41.....as of July 1
Title 42 through Title 50.....as of October 1

The appropriate revision date is printed on the cover of each volume.

LEGAL STATUS

The contents of the Federal Register are required to be judicially noticed (44 U.S.C. 1507). The Code of Federal Regulations is prima facie evidence of the text of the original documents (44 U.S.C. 1510).

HOW TO USE THE CODE OF FEDERAL REGULATIONS

The Code of Federal Regulations is kept up to date by the individual issues of the Federal Register. These two publications must be used together to determine the latest version of any given rule.

To determine whether a Code volume has been amended since its revision date (in this case, April 1, 2015), consult the ''List of CFR Sections Affected (LSA),'' which is issued monthly, and the ''Cumulative List of Parts Affected,'' which appears in the Reader Aids section of the daily Federal Register. These two lists will identify the Federal Register page number of the latest amendment of any given rule.

EFFECTIVE AND EXPIRATION DATES

Each volume of the Code contains amendments published in the Federal Register since the last revision of that volume of the Code. Source citations for the regulations are referred to by volume number and page number of the Federal Register and date of publication. Publication dates and effective dates are usually not the same and care must be exercised by the user in determining the actual effective date. In instances where the effective date is beyond the cutoff date for the Code a note has been inserted to reflect the future effective date. In those instances where a regulation published in the Federal Register states a date certain for expiration, an appropriate note will be inserted following the text.

OMB CONTROL NUMBERS

The Paperwork Reduction Act of 1980 (Pub. L. 96–511) requires Federal agencies to display an OMB control number with their information collection request.

Many agencies have begun publishing numerous OMB control numbers as amendments to existing regulations in the CFR. These OMB numbers are placed as close as possible to the applicable recordkeeping or reporting requirements.

PAST PROVISIONS OF THE CODE

Provisions of the Code that are no longer in force and effect as of the revision date stated on the cover of each volume are not carried. Code users may find the text of provisions in effect on any given date in the past by using the appropriate List of CFR Sections Affected (LSA). For the convenience of the reader, a ''List of CFR Sections Affected'' is published at the end of each CFR volume. For changes to the Code prior to the LSA listings at the end of the volume, consult previous annual editions of the LSA. For changes to the Code prior to 2001, consult the List of CFR Sections Affected compilations, published for 1949-1963, 1964-1972, 1973-1985, and 1986-2000.

''[RESERVED]'' TERMINOLOGY

The term ''[Reserved]'' is used as a place holder within the Code of Federal Regulations. An agency may add regulatory information at a ''[Reserved]'' location at any time. Occasionally ''[Reserved]'' is used editorially to indicate that a portion of the CFR was left vacant and not accidentally dropped due to a printing or computer error.

INCORPORATION BY REFERENCE

What is incorporation by reference? Incorporation by reference was established by statute and allows Federal agencies to meet the requirement to publish regulations in the Federal Register by referring to materials already published elsewhere. For an incorporation to be valid, the Director of the Federal Register must approve it. The legal effect of incorporation by reference is that the material is treated as if it were published in full in the Federal Register (5 U.S.C. 552(a)). This material, like any other properly issued regulation, has the force of law.

What is a proper incorporation by reference? The Director of the Federal Register will approve an incorporation by reference only when the requirements of 1 CFR part 51 are met. Some of the elements on which approval is based are:

(a) The incorporation will substantially reduce the volume of material published in the Federal Register.

(b) The matter incorporated is in fact available to the extent necessary to afford fairness and uniformity in the administrative process.

(c) The incorporating document is drafted and submitted for publication in accordance with 1 CFR part 51.

What if the material incorporated by reference cannot be found? If you have any problem locating or obtaining a copy of material listed as an approved incorporation by reference, please contact the agency that issued the regulation containing that incorporation. If, after contacting the agency, you find the material is not available, please notify the Director of the Federal Register, National Archives and Records Administration, 8601 Adelphi Road, College Park, MD 20740-6001, or call 202-741-6010.

CFR INDEXES AND TABULAR GUIDES

A subject index to the Code of Federal Regulations is contained in a separate volume, revised annually as of January 1, entitled CFR INDEX AND FINDING AIDS. This volume contains the Parallel Table of Authorities and Rules. A list of CFR titles, chapters, subchapters, and parts and an alphabetical list of agencies publishing in the CFR are also included in this volume.

An index to the text of ''Title 3—The President'' is carried within that volume.

The Federal Register Index is issued monthly in cumulative form. This index is based on a consolidation of the ''Contents'' entries in the daily Federal Register.

A List of CFR Sections Affected (LSA) is published monthly, keyed to the revision dates of the 50 CFR titles.

REPUBLICATION OF MATERIAL

There are no restrictions on the republication of material appearing in the Code of Federal Regulations.

INQUIRIES

For a legal interpretation or explanation of any regulation in this volume, contact the issuing agency. The issuing agency's name appears at the top of odd-numbered pages.

For inquiries concerning CFR reference assistance, call 202–741–6000 or write to the Director, Office of the Federal Register, National Archives and Records Administration, 8601 Adelphi Road, College Park, MD 20740-6001 or e-mail *fedreg.info@nara.gov*.

SALES

The Government Publishing Office (GPO) processes all sales and distribution of the CFR. For payment by credit card, call toll-free, 866-512-1800, or DC area, 202-512-1800, M-F 8 a.m. to 4 p.m. e.s.t. or fax your order to 202-512-2104, 24 hours a day. For payment by check, write to: US Government Publishing Office – New Orders, P.O. Box 979050, St. Louis, MO 63197-9000.

ELECTRONIC SERVICES

The full text of the Code of Federal Regulations, the LSA (List of CFR Sections Affected), The United States Government Manual, the Federal Register, Public Laws, Public Papers of the Presidents of the United States, Compilation of Presidential Documents and the Privacy Act Compilation are available in electronic format via *www.ofr.gov*. For more information, contact the GPO Customer Contact Center, U.S. Government Publishing Office. Phone 202-512-1800, or 866-512-1800 (toll-free). E-mail, *ContactCenter@gpo.gov*.

The Office of the Federal Register also offers a free service on the National Archives and Records Administration's (NARA) World Wide Web site for public law numbers, Federal Register finding aids, and related information. Connect to NARA's web site at *www.archives.gov/federal-register*.

The e-CFR is a regularly updated, unofficial editorial compilation of CFR material and Federal Register amendments, produced by the Office of the Federal Register and the Government Publishing Office. It is available at *www.ecfr.gov*.

AMY P. BUNK,
Acting Director,
Office of the Federal Register.
April 1, 2015.

THIS TITLE

Title 26—INTERNAL REVENUE is composed of twenty-two volumes. The contents of these volumes represent all current regulations issued by the Internal Revenue Service, Department of the Treasury, as of April 1, 2015. The first fifteen volumes comprise part 1 (Subchapter A—Income Tax) and are arranged by sections as follows: §§ 1.0–1.60; §§ 1.61–1.139; §§ 1.140–1.169; §§ 1.170–1.300; §§ 1.301–1.400; §§ 1.401–1.409; §§ 1.410–1.440; §§ 1.441–1.500; §§ 1.501–1.640; §§ 1.641–1.850; §§ 1.851–1.907; §§ 1.908–1.1000; §§ 1.1001–1.1400; §§ 1.1401–1.1550; and § 1.1551 to end of part 1. The sixteenth volume containing parts 2–29, includes the remainder of subchapter A and all of Subchapter B—Estate and Gift Taxes. The last six volumes contain parts 30–39 (Subchapter C—Employment Taxes and Collection of Income Tax at Source); parts 40–49; parts 50–299 (Subchapter D—Miscellaneous Excise Taxes); parts 300–499 (Subchapter F—Procedure and Administration); parts 500–599 (Subchapter G—Regulations under Tax Conventions); and part 600 to end (Subchapter H—Internal Revenue Practice).

The OMB control numbers for Title 26 appear in § 602.101 of this chapter. For the convenience of the user, § 602.101 appears in the Finding Aids section of the volumes containing parts 1 to 599.

For this volume, Bonnie Fritts was Chief Editor. The Code of Federal Regulations publication program is under the direction of John Hyrum Martinez, assisted by Stephen J. Frattini.

Title 26—Internal Revenue

(This book contains part 1, §§ 1.1401 to 1.1550)

Part

CHAPTER I—Internal Revenue Service, Department of the Treasury (Continued) 1

CHAPTER I—INTERNAL REVENUE SERVICE, DEPARTMENT OF THE TREASURY (CONTINUED)

EDITORIAL NOTE: IRS published a document at 45 FR 6088, January 25, 1980, deleting statutory sections from their regulations. In Chapter I cross references to the deleted material have been changed to the corresponding sections of the IRS Code of 1954 or to the appropriate regulations sections. When either such change produced a redundancy, the cross reference has been deleted. For further explanation, see 45 FR 20795, Mar. 31, 1980.

SUBCHAPTER A—INCOME TAX (CONTINUED)

Part		*Page*
1	Income taxes (Continued)	5

SUPPLEMENTARY PUBLICATIONS: *Internal Revenue Service Looseleaf Regulations System.*

Additional supplementary publications are issued covering *Alcohol and Tobacco Tax Regulations*, and *Regulations Under Tax Conventions.*

SUBCHAPTER A—INCOME TAX (CONTINUED)

PART 1—INCOME TAXES (CONTINUED)

TAX ON SELF-EMPLOYMENT INCOME

Sec.
1.1401–1 Tax on self-employment income.
1.1402(a)–1 Definition of net earnings from self-employment.
1.1402(a)–2 Computation of net earnings from self-employment.
1.1402(a)–3 Special rules for computing net earnings from self-employment.
1.1402(a)–4 Rentals from real estate.
1.1402(a)–5 Dividends and interest.
1.1402(a)–6 Gain or loss from disposition of property.
1.1402(a)–7 Net operating loss deduction.
1.1402(a)–8 Community income.
1.1402(a)–9 Puerto Rico.
1.1402(a)–10 Personal exemption deduction.
1.1402(a)–11 Ministers and members of religious orders.
1.1402(a)–12 Continental shelf and certain possessions of the United States.
1.1402(a)–13 Income from agricultural activity.
1.1402(a)–14 Options available to farmers in computing net earnings from self-employment for taxable years ending after 1954 and before December 31, 1956.
1.1402(a)–15 Options available to farmers in computing net earnings from self-employment for taxable years ending on or after December 31, 1956.
1.1402(a)–16 Exercise of option.
1.1402(a)–17 Retirement payments to retired partners.
1.1402(a)–18 Split-dollar life insurance arrangements.
1.1402(b)–1 Self-employment income.
1.1402(c)–1 Trade or business.
1.1402(c)–2 Public office.
1.1402(c)–3 Employees.
1.1402(c)–4 Individuals under Railroad Retirement System.
1.1402(c)–5 Ministers and members of religious orders.
1.1402(c)–6 Members of certain professions.
1.1402(c)–7 Members of religious groups opposed to insurance.
1.1402(d)–1 Employee and wages.
1.1402(e)–1A Application of regulations under section 1402(e).
1.1402(e)–2A Ministers, members of religious orders and Christian Science practitioners; application for exemption from self-employment tax.
1.1402(e)–3A Time limitation for filing application for exemption.
1.1402(e)–4A Period for which exemption is effective.
1.1402(e)–5A Applications for exemption from self-employment taxes filed after December 31, 1986, by ministers, certain members of religious orders, and Christian Science practitioners.
1.1402(e)(1)–1 Election by ministers, members of religious orders, and Christian Science practitioners for self-employment coverage.
1.1402(e)(2)–1 Time limitation for filing waiver certificate.
1.1402(e)(3)–1 Effective date of waiver certificate.
1.1402(e)(4)–1 Treatment of certain remuneration paid in 1955 and 1956 as wages.
1.1402(e)(5)–1 Optional provision for certain certificates filed before April 15, 1962.
1.1402(e)(5)–2 Optional provisions for certain certificates filed on or before April 17, 1967.
1.1402(e)(6)–1 Certificates filed by fiduciaries or survivors on or before April 15, 1962.
1.1402(f)–1 Computation of partner's net earnings from self-employment for taxable year which ends as result of his death.
1.1402(g)–1 Treatment of certain remuneration erroneously reported as net earnings from self-employment.
1.1402(h)–1 Members of certain religious groups opposed to insurance.
1.1403–1 Cross references.

NET INVESTMENT INCOME TAX

§1.1411–0 Table of contents of provisions applicable to section 1411.
1.1411–1 General rules.
1.1411–2 Application to individuals.
1.1411–3 Application to estates and trusts.
1.1411–4 Definition of net investment income.
1.1411–5 Trades or businesses to which tax applies.
1.1411–6 Income on investment of working capital subject to tax.
1.1411–7 [Reserved]
1.1411–8 Exception for distributions from qualified plans.
1.1411–9 Exception for self-employment income.
1.1411–10 Controlled foreign corporations and passive foreign investment companies.

WITHHOLDING OF TAX ON NONRESIDENT ALIENS AND FOREIGN CORPORATIONS AND TAX-FREE COVENANT BONDS

NONRESIDENT ALIENS AND FOREIGN CORPORATIONS

1.1441–0 Outline of regulation provisions for section 1441.

1.1441–1 Requirement for the deduction and withholding of tax on payments to foreign persons.
1.1441–1T Requirement for the deduction and withholding of tax on payments to foreign persons (temporary).
1.1441–2 Amounts subject to withholding.
1.1441–3 Determination of amounts to be withheld.
1.1441–3T Determination of amounts to be withheld (temporary).
1.1441–4 Exemptions from withholding for certain effectively connected income and other amounts.
1.1441–4T Exemptions from withholding for certain effectively connected income and other amounts (temporary).
1.1441–5 Withholding on payments to partnerships, trusts, and estates.
1.1441–5T Withholding on payments to partnerships, trusts, and estates (temporary).
1.1441–6 Claim of reduced withholding under an income tax treaty.
1.1441–6T Claim of reduced withholding under an income tax treaty (temporary).
1.1441–7 General provisions relating to withholding agents.
1.1441–7T General provisions relating to withholding agents (temporary).
1.1441–8 Exemption from withholding for payments to foreign governments, international organizations, foreign central banks of issue, and the Bank for International Settlements.
1.1441–9 Exemption from withholding on exempt income of a foreign tax-exempt organization, including foreign private foundations.
1.1441–10 Withholding agents with respect to fact-pay arrangements.
1.1442–1 Withholding of tax on foreign corporations.
1.1442–2 Exemption under a tax treaty.
1.1442–3 Tax exempt income of a foreign tax-exempt corporation.
1.1443–1 Foreign tax-exempt organizations.
1.1445–1 Withholding on dispositions of U.S. real property interests by foreign persons: In general.
1.1445–2 Situations in which withholding is not required under section 1445(a).
1.1445–3 Adjustments to amount required to be withheld pursuant to withholding certificate.
1.1445–4 Liability of agents.
1.1445–5 Special rules concerning distributions and other transactions by corporations, partnerships, trusts, and estates.
1.1445–6 Adjustments pursuant to withholding certificate of amount required to be withheld under section 1445(e).
1.1445–7 Treatment of foreign corporation that has made an election under section 897(i) to be treated as a domestic corporation.
1.1445–8 Special rules regarding publicly traded partnerships, publicly traded trusts and real estate investment trusts (REITs).
1.1445–10T Special rule for Foreign governments (temporary).
1.1445–11T Special rules requiring withholding under §1.1445–5 (temporary).
1.1446–0 Table of contents.
1.1446–1 Withholding tax on foreign partners' share of effectively connected taxable income.
1.1446–2 Determining a partnership's effectively connected taxable income allocable to foreign partners under section 704.
1.1446–3 Time and manner of calculating and paying over the 1446 tax.
1.1446–4 Publicly traded partnerships.
1.1446–5 Tiered partnership structures.
1.1446–6 Special rules to reduce a partnership's 1446 tax with respect to a foreign partner's allocable share of effectively connected taxable income.
1.1446–7 Effective/Applicability date.

TAX-FREE COVENANT BONDS

1.1451–1 Tax-free covenant bonds issued before January 1, 1934.
1.1451–2 Exemptions from withholding under section 1451.

APPLICATION OF WITHHOLDING PROVISIONS

1.1461–1 Payment and returns of tax withheld.
1.1461–1T Payments and returns of tax withheld (temporary).
1.1461–2 Adjustments for overwithholding or underwithholding of tax.
1.1461–2T Adjustments for overwithholding or underwithholding of tax (temporary).
1.1461–3 Withholding under section 1446.
1.1462–1 Withheld tax as credit to recipient of income.
1.1463–1 Tax paid by recipient of income.
1.1464–1 Refunds or credits.

INFORMATION REPORTING BY FOREIGN FINANCIAL INSTITUTIONS

1.1471–0 Outline of regulation provisions for sections 1471 through 1474.
1.1471–1 Scope of chapter 4 and definitions.
1.1471–1T Scope of chapter 4 and definitions (temporary).
1.1471–2 Requirement to deduct and withhold tax on withholdable payments to certain FFIs.
1.1471–2T Requirement to deduct and withhold tax on withholdable payments to certain FFIs (temporary).
1.1471–3 Identification of payee.
1.1471–3T Identification of payee (temporary).
1.1471–4 FFI agreement.
1.1471–4T FFI agreement (temporary).
1.1471–5 Definitions applicable to section 1471.

1.1471–5T Definitions applicable to section 1471 (temporary).
1.1471–6 Payments beneficially owned by exempt beneficial owners.
1.1471–6T Payments beneficially owned by exempt beneficial owners (temporary).
1.1472–1 Withholding on NFFEs.
1.1472–1T Withholding on NFFEs (temporary).
1.1473–1 Section 1473 definitions.
1.1473–1T Section 1473 definitions (temporary).
1.1474–1 Liability for withheld tax and withholding agent reporting.
1.1474–1T Liability for withheld tax and withholding agent reporting (temporary).
1.1474–2 Adjustments for overwithholding or underwithholding of tax.
1.1474–3 Withheld tax as credit to beneficial owner of income.
1.1474–4 Tax paid only once.
1.1474–5 Refunds or credits.
1.1474–6 Coordination of chapter 4 with other withholding provisions.
1.1474–6T Coordination of chapter 4 with other withholding provisions (temporary).
1.1474–7 Confidentiality of information.

MITIGATION OF EFFECT OF RENEGOTIATION OF GOVERNMENT CONTRACTS

1.1481–1 [Reserved]

TAX ON TRANSFERS TO AVOID INCOME TAX

1.1491–1 Imposition of tax.
1.1492–1 Nontaxable transfers.
1.1493–1 Definition of foreign trust.
1.1494–1 Returns; payment and collection of tax.
1.1494–2 Effective date.

CONSOLIDATED RETURNS

RETURNS AND PAYMENT OF TAX

Consolidated Return Regulations

1.1502–0 Effective dates.
1.1502–1 Definitions.

CONSOLIDATED TAX LIABILITY

1.1502–2 Computation of tax liability.
1.1502–3 Consolidated tax credits.
1.1502–4 Consolidated foreign tax credit.
1.1502–5 Estimated tax.
1.1502–6 Liability for tax.
1.1502–9 Consolidated overall foreign losses, separate limitation losses, and overall domestic losses.

COMPUTATION OF CONSOLIDATED TAXABLE INCOME

1.1502–11 Consolidated taxable income.

COMPUTATION OF SEPARATE TAXABLE INCOME

1.1502–12 Separate taxable income.
1.1502–13 Intercompany transactions.
1.1502–15 SRLY limitation on built-in losses.
1.1502–16 Mine exploration expenditures.
1.1502–17 Methods of accounting.
1.1502–18 Inventory adjustment.
1.1502–19 Excess loss accounts.

COMPUTATION OF CONSOLIDATED ITEMS

1.1502–21 Net operating losses.
1.1502–21T Net operating losses (temporary).
1.1502–22 Consolidated capital gain and loss.
1.1502–23 Consolidated net section 1231 gain or loss.
1.1502–24 Consolidated charitable contributions deduction.
1.1502–26 Consolidated dividends received deduction.
1.1502–27 Consolidated section 247 deduction.
1.1502–28 Consolidated section 108.

BASIS, STOCK OWNERSHIP, AND EARNINGS AND PROFITS RULES

1.1502–30 Stock basis after certain triangular reorganizations.
1.1502–31 Stock basis after a group structure change.
1.1502–32 Investment adjustments.
1.1502–33 Earnings and profits.
1.1502–34 Special aggregate stock ownership rules.
1.1502–35 Transfers of subsidiary stock and deconsolidations of subsidiaries.
1.1502–36 Unified loss rule.

SPECIAL TAXES AND TAXPAYERS

1.1502–42 Mutual savings banks, etc.
1.1502–43 Consolidated accumulated earnings tax.
1.1502–44 Percentage depletion for independent producers and royalty owners.
1.1502–47 Consolidated returns by life-nonlife groups.
1.1502–55 Computation of alternative minimum tax of consolidated groups.

ADMINISTRATIVE PROVISIONS AND OTHER RULES

1.1502–75 Filing of consolidated returns.
1.1502–76 Taxable year of members of group.
1.1502–77 Agent for the group.
1.1502–78 Tentative carryback adjustments.
1.1502–79 Separate return years.
1.1502–80 Applicability of other provisions of law.
1.1502–81T Alaska Native Corporations.
1.1502–90 Table of contents.
1.1502–91 Application of section 382 with respect to a consolidated group.
1.1502–92 Ownership change of a loss group or a loss subgroup.
1.1502–93 Consolidated section 382 limitation (or subgroup section 382 limitation).
1.1502–94 Coordination with section 382 and the regulations thereunder when a corporation becomes a member of a consolidated group.

1.1502–95 Rules on ceasing to be a member of a consolidated group (or loss subgroup).
1.1502–96 Miscellaneous rules.
1.1502–97 Special rules under section 382 for members under the jurisdiction of a court in a title 11 similar case. [Reserved]
1.1502–98 Coordination with section 383.
1.1502–99 Effective/applicability dates.
1.1502–100 Corporations exempt from tax.
1.1503–1 Computation and payment of tax.
1.1503–2 Dual consolidated loss.
1.1503(d)–0 Table of contents.
1.1503(d)–1 Definitions and special rules for filings under section 1503(d).
1.1503(d)–2 Domestic use.
1.1503(d)–3 Foreign use.
1.1503(d)–4 Domestic use limitation and related operating rules.
1.1503(d)–5 Attribution of items and basis adjustments.
1.1503(d)–6 Exceptions to the domestic use limitation rule.
1.1503(d)–7 Examples.
1.1503(d)–8 Effective dates.
1.1504–0 Outline of provisions.
1.1504–1 Definitions.
1.1504–2—1.1504–3 [Reserved]
1.1504–4 Treatment of warrants, options, convertible obligations, and other similar interests.

REGULATIONS APPLICABLE FOR TAX YEARS FOR WHICH A RETURN IS DUE ON OR BEFORE AUGUST 11, 1999

1.1502–9A Applications of overall foreign loss recapture rules to corporations filing consolidated returns due on or before August 11, 1999.

REGULATIONS APPLICABLE TO TAXABLE YEARS BEFORE JANUARY 1, 1997

1.1502–15A Limitations on the allowance of built-in deductions for consolidated return years beginning before January 1, 1997.
1.1502–21A Consolidated net operating loss deduction generally applicable for consolidated return years beginning before January 1, 1997.
1.1502–22A Consolidated net capital gain or loss generally applicable for consolidated return years beginning before January 1, 1997.
1.1502–23A Consolidated net section 1231 gain or loss generally applicable for consolidated return years beginning before January 1, 1997.
1.1502–41A Determination of consolidated net long-term capital gain and consolidated net short-term capital loss generally applicable for consolidated return years beginning before January 1, 1997.

REGULATIONS APPLICABLE TO TAXABLE YEARS BEGINNING BEFORE JUNE 28, 2002

1.1502–77A Common parent agent for subsidiaries applicable for consolidated return years beginning before June 28, 2002.

REGULATIONS APPLICABLE TO TAXABLE YEARS BEGINNING ON OR AFTER JUNE 28, 2002, AND BEFORE APRIL 1, 2015

1.1502–77B Agent for the group applicable for consolidated return years beginning on or after June 28, 2002, and before April 1, 2015.

REGULATIONS APPLICABLE TO TAXABLE YEARS BEFORE JANUARY 1, 1997

1.1502–79A Separate return years generally applicable for consolidated return years beginning before January 1, 1997.

REGULATIONS APPLYING SECTION 382 WITH RESPECT TO TESTING DATES (AND CORPORATIONS JOINING OR LEAVING CONSOLIDATED GROUPS) BEFORE JUNE 25, 1999

1.1502–90A Table of contents.
1.1502–91A Application of section 382 with respect to a consolidated group generally applicable for testing dates before June 25, 1999.
1.1502–92A Ownership change of a loss group or a loss subgroup generally applicable for testing dates before June 25, 1999.
1.1502–93A Consolidated section 382 limitation (or subgroup section 382 limitation) generally applicable for testing dates before June 25, 1999.
1.1502–94A Coordination with section 382 and the regulations thereunder when a corporation becomes a member of a consolidated group generally applicable for corporations becoming members of a group before June 25, 1999.
1.1502–95A Rules on ceasing to be a member of a consolidated group generally applicable for corporations ceasing to be members before June 25, 1999.
1.1502–96A Miscellaneous rules generally applicable for testing dates before June 25, 1999.
1.1502–97A Special rules under section 382 for members under the jurisdiction of a court in a title 11 similar case. [Reserved]
1.1502–98A Coordination with section 383 generally applicable for testing dates (or members joining or leaving a group) before June 25, 1999.
1.1502–99A Effective dates.

DUAL CONSOLIDATED LOSSES INCURRED IN TAXABLE YEARS BEGINNING BEFORE OCTOBER 1, 1992

AUTHORITY: 26 U.S.C. 7805, unless otherwise noted.

Section 1.1402 (e)–5T also is issued under 26 U.S.C. 1402(e)(1) and (2).

Section 1.1441–2 also issued under 26 U.S.C. 1441(c)(4) and 26 U.S.C. 3401(a)(6).

Section 1.1441–3 also issued under 26 U.S.C. 1441(c)(4), 26 U.S.C. 3401(a)(6) and 26 U.S.C. 7701(l).

Section 1.1441–4 also issued under 26 U.S.C. 1441(c)(4) and 26 U.S.C. 3401(a)(6).

Section 1.1441–5 also issued under 26 U.S.C. 1441(c)(4), 26 U.S.C. 3401(a)(6) and 26 U.S.C. 7701(b)(11).

Section 1.1441–6 also issued under 26 U.S.C. 1441(c)(4) and 26 U.S.C. 3401(a)(6).

Section 1.1441–7 also issued under 26 U.S.C. 1441(c)(4), 26 U.S.C. 3401(a)(6) and 26 U.S.C. 7701(l).

Section 1.1443–1 also issued under 26 U.S.C. 1443(a).

Section 1.1445–5 also issued under 26 U.S.C. 1445(e)(6).

Section 1.1445–8 also issued under 26 U.S.C. 1445(e)(6).

Section 1.1461–1 also issued under 26 U.S.C. 1441(c)(4) and 26 U.S.C. 3401(a)(6).

Section 1.1461–2 also issued under 26 U.S.C. 1441(c)(4) and 26 U.S.C. 3401(a)(6).

Section 1.1462–1 also issued under 26 U.S.C. 1441(c)(4) and 26 U.S.C. 3401(a)(6).

Section 1.1471–1 is also issued under 26 U.S.C. 1471

Section 1.1471–2 is also issued under 26 U.S.C. 1471

Section 1.1471–3 is also issued under 26 U.S.C. 1471

Section 1.1471–4 is also issued under 26 U.S.C. 1471

Section 1.1471–5 is also issued under 26 U.S.C. 1471

Section 1.1471–6 is also issued under 26 U.S.C. 1471

Section 1.1472–1 is also issued under 26 U.S.C. 1472

Section 1.1473–1 is also issued under 26 U.S.C. 1473

Section 1.1474–1 is also issued under 26 U.S.C. 1474

Section 1.1474–2 is also issued under 26 U.S.C. 1474

Section 1.1474–3 is also issued under 26 U.S.C. 1474

Section 1.1474–4 is also issued under 26 U.S.C. 1474

Section 1.1474–5 is also issued under 26 U.S.C. 1474

Section 1.1474–6 is also issued under 26 U.S.C. 1474

Section 1.1474–7 is also issued under 26 U.S.C. 1474

Section 1.1502–0 also issued under 26 U.S.C. 1502.

Section 1.1502–1 also issued under 26 U.S.C. 1502.

Section 1.1502–2 also issued under 26 U.S.C. 1502.

Section 1.1502–3 also issued under 26 U.S.C. 1502.

Section 1.1502–4 also issued under 26 U.S.C. 1502.

Section 1.1502–9 also issued under 26 U.S.C. 1502.

Section 1.1502–11 also issued under 26 U.S.C. 1502.

Section 1.1502–12 also issued under 26 U.S.C. 1502.

Section 1.1502–13 also issued under 26 U.S.C. 1502.

Section 1.1502–15 also issued under 26 U.S.C. 1502.

Section 1.1502–17 also issued under 26 U.S.C. 446 and 1502.

Section 1.1502–18 also issued under 26 U.S.C. 1502.

Section 1.1502–19 also issued under 26 U.S.C. 301, 1502, and 1503.

Section 1.1502–20 also issued under 26 U.S.C. 337(d) and 1502.

Section 1.1502–20T also issued under 26 U.S.C. 337(d) and 1502.

Section 1.1502–21 also issued under 26 U.S.C. 1502 and 6402(i).

Section 1.1502–21(b)(1) and (b)(3)(v) also issued under 26 U.S.C. 1502.

Section 1.1502–21T also issued under 26 U.S.C. 1502.

Section 1.1502–21T(b)(1) and (b)(3)(v) also issued under 26 U.S.C. 1502.

Section 1.1502–22 also issued under 26 U.S.C. 1502.

Section 1.1502–23 also issued under 26 U.S.C. 1502.

Section 1.1502–26 also issued under 26 U.S.C. 1502.

Section 1.1502–28 also issued under 26 U.S.C. 1502.

Section 1.1502–30 also issued under 26 U.S.C. 1502.

Section 1.1502–31 also issued under 26 U.S.C. 1502.

Section 1.1502–32 also issued under 26 U.S.C. 301, 1502, and 1503.

Section 1.1502–32 also issued under 26 U.S.C. 1502.

Section 1.1502–32(a)(2), (b)(3)(iii)(C), (b)(3)(iii)(D), and (b)(4)(vi) also issued under 26 U.S.C. 1502.

Section 1.1502–32T also issued under 26 U.S.C. 1502.

Section 1.1502–33 also issued under 26 U.S.C. 1502.

Section 1.1502–34 also issued under 26 U.S.C. 1502.

Section 1.1502–35 also issued under 26 U.S.C. 1502.

Section 1.1502–35T also issued under 26 U.S.C. 1502.

Section 1.1502–36 also issued under 26 U.S.C. 1502.

Section 1.1502–36 also issued under 26 U.S.C. 337(d).
Section 1.1502–43 also issued under 26 U.S.C. 1502.
Section 1.1502–47 also issued under 26 U.S.C. 1502, 1503(c) and 1504(c).
Section 1.1502–55 also issued under 26 U.S.C. 1502.
Section 1.1502–75 also issued under 26 U.S.C. 1502.
Section 1.1502–76 also issued under 26 U.S.C. 1502.
Section 1.1502–77 also issued under 26 U.S.C. 1502 and 6402(j).
Section 1.1502–78 also issued under 26 U.S.C. 1502, 6402(j), and 6411(c).
Section 1.1502–79 also issued under 26 U.S.C. 1502.
Section 1.1502–80 also issued under 26 U.S.C. 1502.
Section 1.1502–81T also issued under 26 U.S.C. 1502.
Section 1.1502–91 also issued under 26 U.S.C. 382(m) and 26 U.S.C. 1502.
Section 1.1502–92 also issued under 26 U.S.C. 382(m) and 26 U.S.C. 1502.
Section 1.1502–93 also issued under 26 U.S.C. 382(m) and 26 U.S.C. 1502.
Section 1.1502–94 also issued under 26 U.S.C. 382(m) and 26 U.S.C. 1502.
Section 1.1502–95 also issued under 26 U.S.C. 382(m) and 26 U.S.C. 1502.
Section 1.1502–96 also issued under 26 U.S.C. 382(m) and 26 U.S.C. 1502.
Section 1.1502–98 also issued under 26 U.S.C. 382(m) and 26 U.S.C. 1502.
Section 1.1502–99 also issued under 26 U.S.C. 382(m) and 26 U.S.C. 1502.
Section 1.1503–2 also issued under 26 U.S.C. 1502.
Section 1.1503(d) also issued under 26 U.S.C. 953(d) and 26 U.S.C. 1502.
Section 1.1503–2T also issued under 26 U.S.C. 1503(d).
Section 1.1504–4 also issued under 26 U.S.C. 1504(a)(5).
Section 1.1502–9A also issued under 26 U.S.C. 1502.
Section 1.1502–15A also issued under 26 U.S.C. 1502.
Section 1.1502–21A also issued under 26 U.S.C. 1502.
Section 1.1502–22A also issued under 26 U.S.C. 1502.
Section 1.1502–23A also issued under 26 U.S.C. 1502.
Section 1.1502–41A also issued under 26 U.S.C. 1502.
Section 1.1502–77A also issued under 26 U.S.C. 1502 and 6402(j).
Section 1.1502–77B also issued under 26 U.S.C. 1502 and 6402(j).
Section 1.1502–79A also issued under 26 U.S.C. 1502.
Section 1.1502–91A also issued under 26 U.S.C. 382(m) and 26 U.S.C. 1502.
Section 1.1502–92A also issued under 26 U.S.C. 382(m) and 26 U.S.C. 1502.
Section 1.1502–93A also issued under 26 U.S.C. 382(m) and 26 U.S.C. 1502.
Section 1.1502–94A also issued under 26 U.S.C. 382(m) and 26 U.S.C. 1502.
Section 1.1502–95A also issued under 26 U.S.C. 382(m) and 26 U.S.C. 1502.
Section 1.1502–96A also issued under 26 U.S.C. 382(m) and 26 U.S.C. 1502.
Section 1.1502–98A also issued under 26 U.S.C. 382(m) and 26 U.S.C. 1502.
Section 1.1502–99A also issued under 26 U.S.C. 382(m) and 26 U.S.C. 1502.

SOURCE: Sections 1.1401–1 through 1.1403–1 contained in T.D. 6691, 28 FR 12796, Dec. 3, 1963, unless otherwise noted.

TAX ON SELF-EMPLOYMENT INCOME

§ 1.1401–1 Tax on self-employment income.

(a) There is imposed, in addition to other taxes, a tax upon the self-employment income of every individual at the rates prescribed in section 1401(a) (old-age, survivors, and disability insurance) and (b) (hospital insurance). (See subparagraphs (1) and (2) of paragraph (b) of this section.) This tax shall be levied, assessed, and collected as part of the income tax imposed by subtitle A of the Code and, except as otherwise expressly provided, will be included with the tax imposed by section 1 or 3 in computing any deficiency or overpayment and in computing the interest and additions to any deficiency, overpayment, or tax. Since the tax on self-employment income is part of the income tax, it is subject to the jurisdiction of the Tax Court of the United States to the same extent and in the same manner as the other taxes under subtitle A of the Code. Furthermore, with respect to taxable years beginning after December 31, 1966, this tax must be taken into account in computing any estimate of the taxes required to be declared under section 6015.

(b) The rates of tax on self-employment income are as follows (these regulations do not reflect off-Code revisions to the following rates):

(1) For Old-age, Survivors, and Disability Insurance:

Taxable year	Percent
Beginning after December 31, 1983 and before January 1, 1988	11.40

Taxable year	Percent
Beginning after December 31, 1987 and before January 1, 1990	12.12
Beginning after December 31, 1989	12.40

(2)(i) For Hospital Insurance:

Taxable year	Percent
Beginning after December 31, 1983 and before January 1, 1985	2.60
Beginning after December 31, 1984 and before January 1, 1986	2.70
Beginning after December 31, 1985	2.90

(ii) For Additional Medicare Tax:

Taxable year	Percent
Beginning after December 31, 2012	0.9

(c) In general, self-employment income consists of the net earnings derived by an individual (other than a nonresident alien) from a trade or business carried on by him as sole proprietor or by a partnership of which he is a member, including the net earnings of certain employees as set forth in § 1.1402(c)–3, and of crew leaders, as defined in section 3121(o) (see such section and the regulations thereunder in part 31 of this chapter (Employment Tax Regulations)). See, however, the exclusions, exceptions, and limitations set forth in §§ 1.1402(a)–1 through 1.1402(h)–1.

(d) *Special rules regarding Additional Medicare Tax*. (1) *General rule*. An individual is liable for Additional Medicare Tax to the extent that his or her self-employment income exceeds the following threshold amounts.

Filling status	Threshold
Married individual filing a joint return	$250,000
Married individual filing a separate return	125,000
Any other case	200,000

NOTE: These threshold amounts are specified under section 1401(b)(2)(A).

(2) *Coordination with Federal Insurance Contributions Act*. (i) *General rule*. Under section 1401(b)(2)(B), the applicable threshold specified under section 1401(b)(2)(A) is reduced (but not below zero) by the amount of wages (as defined in section 3121(a)) taken into account in determining Additional Medicare Tax under section 3101(b)(2) with respect to the taxpayer. This rule does not apply to Railroad Retirement Tax Act (RRTA) compensation (as defined in section 3231(e)).

(ii) *Examples*. The rules provided in paragraph (d)(2)(i) of this section are illustrated by the following examples:

Example 1. A, a single filer, has $130,000 in self-employment income and $0 in wages. A is not liable to pay Additional Medicare Tax.

Example 2. B, a single filer, has $220,000 in self-employment income and $0 in wages. B is liable to pay Additional Medicare Tax on $20,000 ($220,000 in self-employment income minus the threshold of $200,000).

Example 3. C, a single filer, has $145,000 in self-employment income and $130,000 in wages. C's wages are not in excess of $200,000 so C's employer did not withhold Additional Medicare Tax. However, the $130,000 of wages reduces the self-employment income threshold to $70,000 ($200,000 threshold minus the $130,000 of wages). C is liable to pay Additional Medicare Tax on $75,000 of self-employment income ($145,000 in self-employment income minus the reduced threshold of $70,000).

Example 4. E, who is married and files a joint return, has $140,000 in self-employment income. F, E's spouse, has $130,000 in wages. F's wages are not in excess of $200,000 so F's employer did not withhold Additional Medicare Tax. However, the $130,000 of F's wages reduces E's self-employment income threshold to $120,000 ($250,000 threshold minus the $130,000 of wages). E and F are liable to pay Additional Medicare Tax on $20,000 of E's self-employment income ($140,000 in self-employment income minus the reduced threshold of $120,000).

Example 5. D, who is married and files married filing separately, has $150,000 in self-employment income and $200,000 in wages. D's wages are not in excess of $200,000 so D's employer did not withhold Additional Medicare Tax. However, the $200,000 of wages reduces the self-employment income threshold to $0 ($125,000 threshold minus the $200,000 of wages). D is liable to pay Additional Medicare Tax on $75,000 of wages ($200,000 in wages minus the $125,000 threshold for a married filing separately return) and on $150,000 of self-employment income ($150,000 in self-employment income minus the reduced threshold of $0).

(e) *Effective/applicability date*. Paragraphs (b) and (d) of this section apply to quarters beginning on or after November 29, 2013.

[T.D. 6993, 34 FR 828, Jan. 18, 1969, as amended by T.D. 7333, 39 FR 44445, Dec. 24, 1974; T.D. 9645, 78 FR 71471, Nov. 29, 2013]

§ 1.1402(a)–1 Definition of net earnings from self-employment.

(a) Subject to the special rules set forth in §§ 1.1402(a)–3 to 1.1402(a)–17, inclusive, and to the exclusions set forth in §§ 1.1402(c)–2 to 1.1402(c)–7, inclusive, the term ''net earnings from self-employment'' means:

(1) The gross income derived by an individual from any trade or business carried on by such individual, less the deductions allowed by chapter 1 of the Code which are attributable to such trade or business, plus

(2) His distributive share (whether or not distributed), as determined under section 704, of the income (or minus the loss), described in section 702(a)(9) and as computed under section 703, from any trade or business carried on by any partnership of which he is a member.

(b) Gross income derived by an individual from a trade or business includes payments received by him from a partnership of which he is a member for services rendered to the partnership or for the use of capital by the partnership, to the extent the payments are determined without regard to the income of the partnership. However, such payments received from a partnership not engaged in a trade or business within the meaning of section 1402(c) and § 1.1402(c)–1 do not constitute gross income derived by an individual from a trade or business. See section 707(c) and the regulations thereunder, relating to guaranteed payments to a member of a partnership for services or the use of capital. See also section 706(a) and the regulations thereunder, relating to the taxable year of the partner in which such guaranteed payments are to be included in computing taxable income.

(c) Gross income derived by an individual from a trade or business includes gross income received (in the case of an individual reporting income on the cash receipts and disbursements method) or accrued (in the case of an individual reporting income on the accrual method) in the taxable year from a trade or business even though such income may be attributable in whole or in part to services rendered or other acts performed in a prior taxable year as to which the individual was not subject to the tax on self-employment income.

[T.D. 6691, 28 FR 12796, Dec. 3, 1963, as amended by T.D. 7333, 39 FR 44445, Dec. 24, 1974]

§ 1.1402(a)–2 Computation of net earnings from self-employment.

(a) *General rule.* In general, the gross income and deductions of an individual attributable to a trade or business (including a trade or business conducted by an employee referred to in paragraphs (b), (c), (d), or (e) of § 1.1402(c)–3), for the purpose of ascertaining his net earnings from self-employment, are to be determined by reference to the provisions of law and regulations applicable with respect to the taxes imposed by sections 1 and 3. Thus, if an individual uses the accrual method of accounting in computing taxable income from a trade or business for the purpose of the tax imposed by section 1 or 3, he must use the same method in determining net earnings from self-employment. Likewise, if a taxpayer engaged in a trade or business of selling property on the installment plan elects, under the provisions of section 453, to use the installment method in computing income for purposes of the tax under section 1 or 3, he must use the same method in determining net earnings from self-employment. Income which is excludable from gross income under any provision of subtitle A of the Internal Revenue Code is not taken into account in determining net earnings from self-employment except as otherwise provided in § 1.1402(a)–9, relating to certain residents of Puerto Rico, in § 1.1402(a)–11, relating to ministers or members of religious orders, and in § 1.1402(a)–12, relating to the term ''possession of the United States'' as used for purposes of the tax on self-employment income. Thus, in the case of a citizen of the United States conducting, in a foreign country, a trade or business in which both personal services and capital are material income-producing factors, any part of the income therefrom which is excluded from gross income as earned income under the provisions of section 911 and the regulations thereunder is not taken into account in determining net earnings from self-employment.

(b) *Trade or business carried on.* The trade or business must be carried on by the individual, either personally or through agents or employees. Accordingly, income derived from a trade or business carried on by an estate or trust is not included in determining the net earnings from self-employment of the individual beneficiaries of such estate or trust.

(c) *Aggregate net earnings.* Where an individual is engaged in more than one trade or business within the meaning of section 1402(c) and §1.1402(c)–1, his net earnings from self-employment consist of the aggregate of the net income and losses (computed subject to the special rules provided in §§1.1402(a)–1 to 1.1402(a)–17 inclusive) of all such trades or businesses carried on by him. Thus, a loss sustained in one trade or business carried on by an individual will operate to offset the income derived by him from another trade or business.

(d) *Partnerships.* The net earnings from self-employment of an individual include, in addition to the earnings from a trade or business carried on by him, his distributive share of the income or loss, described in section 702(a)(9), from any trade or business carried on by each partnership of which he is a member. An individual's distributive share of such income or loss of a partnership shall be determined as provided in section 704, subject to the special rules set forth in section 1402(a) and in §§1.1402(a)–1 to 1.1402(a)–17, inclusive, and to the exclusions provided in section 1402(c) and §§1.1402(c)–2 to 1.1402(c)–7, inclusive. For provisions relating to the computation of the taxable income of a partnership, see section 703.

(e) *Different taxable years.* If the taxable year of a partner differs from that of the partnership, the partner shall include, in computing net earnings from self-employment, his distributive share of the income or loss, described in section 702(a)(9), of the partnership for its taxable year ending with or within the taxable year of the partner. For the special rule in case of the termination of a partner's taxable year as result of death, see §§1.1402(f) and 1.1402(f)–1.

(f) *Meaning of partnerships.* For the purpose of determining net earnings from self-employment, a partnership is one which is recognized as such for income tax purposes. For income tax purposes, the term ''partnership'' includes not only a partnership as known at common law, but, also a syndicate, group, pool, joint venture, or other unincorporated organization which carries on any trade or business, financial operation, or venture, and which is not, within the meaning of the Code, a trust, estate, or a corporation. An organization described in the preceding sentence shall be treated as a partnership for purposes of the tax on self-employment income even though such organization has elected, pursuant to section 1361 and the regulations thereunder, to be taxed as a domestic corporation.

(g) *Nature of partnership interest.* The net earnings from self-employment of a partner include his distributive share of the income or loss, described in section 702(a)(9), of the partnership of which he is a member, irrespective of the nature of his membership. Thus, in determining his net earnings from self-employment, a limited or inactive partner includes his distributive share of such partnership income or loss. In the case of a partner who is a member of a partnership with respect to which an election has been made pursuant to section 1361 and the regulations thereunder to be taxed as a domestic corporation, net earnings from self-employment include his distributive share of the income or loss, described in section 702(a)(9), from the trade or business carried on by the partnership computed without regard to the fact that the partnership has elected to be taxed as a domestic corporation.

(h) *Proprietorship taxed as domestic corporation.* A proprietor of an unincorporated business enterprise with respect to which an election has been made pursuant to section 1361 and the regulations thereunder to be taxed as a domestic corporation shall compute his net earnings from self-employment without regard to the fact that such election has been made.

[T.D. 6691, 28 FR 12796, Dec. 3, 1963, as amended by T.D. 7333, 39 FR 44445, Dec. 24, 1974]

§ 1.1402(a)–3 Special rules for computing net earnings from self-employment.

For the purpose of computing net earnings from self-employment, the gross income derived by an individual from a trade or business carried on by him, the allowable deductions attributable to such trade or business, and the individual's distributive share of the income or loss, described in section 702(a)(9), from any trade or business carrier on by a partnership of which he is a member shall be computed in accordance with the special rules set forth in §§ 1.1402(a)–4 to 1.1402(a)–17, inclusive.

[T.D. 7333, 39 FR 44445, Dec. 24, 1974]

§ 1.1402(a)–4 Rentals from real estate.

(a) *In general.* Rentals from real estate and from personal property leased with the real estate (including such rentals paid in crop shares) and the deductions attributable thereto, unless such rentals are received by an individual in the course of a trade or business as a real-estate dealer, are excluded. Whether or not an individual is engaged in the trade or business of a real-estate dealer is determined by the application of the principles followed in respect of the taxes imposed by sections 1 and 3. In general, an individual who is engaged in the business of selling real estate to customers with a view to the gains and profits that may be derived from such sales is a real-estate dealer. On the other hand, an individual who merely holds real estate for investment or speculation and receives rentals therefrom is not considered a real-estate dealer. Where a real-estate dealer holds real estate for investment or speculation in addition to real estate held for sale to customers in the ordinary course of his trade or business as a real-estate dealer, only the rentals from the real estate held for sale to customers in the ordinary course of his trade or business as a real-estate dealer, and the deductions attributable thereto, are included in determining net earnings from self-employment; the rentals from the real estate held for investment or speculation, and the deductions attributable thereto, are excluded. Rentals paid in crop shares include income derived by an owner or lessee of land under an agreement entered into with another person pursuant to which such other person undertakes to produce a crop or livestock on such land and pursuant to which (1) the crop or livestock, or the proceeds thereof, are to be divided between such owner or lessee and such other person, and (2) the share of the owner or lessee depends on the amount of the crop or livestock produced. See, however, paragraph (b) of this section.

(b) *Special rule for ''includible farm rental income''*—(1) *In general.* Notwithstanding the rules set forth in paragraph (a) of this section, there shall be included in determining net earnings from self-employment for taxable years ending after 1955 any income derived by an owner or tenant of land, if the following requirements are met with respect to such income:

(i) The income is derived under an arrangement between the owner or tenant of land and another person which provides that such other person shall produce agricultural or horticultural commodities on such land, and that there shall be material participation by the owner or tenant in the production or the management of the production of such agricultural or horticultural commodities; and

(ii) There is material participation by the owner or tenant with respect to any such agricultural or horticultural commodity.

Income so derived shall be referred to in this section as ''includible farm rental income''.

(2) *Requirement that income be derived under an arrangement.* In order for rental income received by an owner or tenant of land to be treated as includible farm rental income, such income must be derived pursuant to a share-farming or other rental arrangement which contemplates material participation by the owner or tenant in the production or management of production of agricultural or horticultural commodities.

(3) *Nature of arrangement.* (i) The arrangement between the owner or tenant and the person referred to in subparagraph (1) of this paragraph may be either oral or written. The arrangement must impose upon such other person the obligation to produce one or

more agricultural or horticultural commodities (including livestock, bees, poultry, and fur-bearing animals and wildlife) on the land of the owner or tenant. In addition, it must be within the contemplation of the parties that the owner or tenant will participate in the production or the management of the production of the agricultural or horticultural commodities required to be produced by the other person under such arrangement to an extent which is material with respect either to the production or to the management of production of such commodities or is material with respect to the production and management of production when the total required participation in connection with both is considered.

(ii) The term ''production'', wherever used in this paragraph, refers to the physical work performed and the expenses incurred in producing a commodity. It includes such activities as the actual work of planting, cultivating, and harvesting crops, and the furnishing of machinery, implements, seed, and livestock. An arrangement will be treated as contemplating that the owner or tenant will materially participate in the ''production'' of the commodities required to be produced by the other person under the arrangement if under the arrangement it is understood that the owner or tenant is to engage to a material degree in the physical work related to the production of such commodities. The mere undertaking to furnish machinery, implements, and livestock and to incur expenses is not, in and of itself, sufficient. Such factors may be significant, however, in cases where the degree of physical work intended of the owner or tenant is not material. For example, if under the arrangement it is understood that the owner or tenant is to engage periodically in physical work to a degree which is not material in and of itself and, in addition, to furnish a substantial portion of the machinery, implements, and livestock to be used in the production of the commodities or to furnish or advance funds or assume financial responsibility for a substantial part of the expense involved in the production of the commodities, the arrangement will be treated as contemplating material participation of the owner or tenant in the production of such commodities.

(iii) The term ''management of the production'', wherever used in this paragraph, refers to services performed in making managerial decisions relating to the production, such as when to plant, cultivate, dust, spray, or harvest the crop, and includes advising and consulting, making inspections, and making decisions as to matters such as rotation of crops, the type of crops to be grown, the type of livestock to be raised, and the type of machinery and implements to be furnished. An arrangement will be treated as contemplating that the owner or tenant is to participate materially in the ''management of the production'' of the commodities required to be produced by the other person under the arrangement if the owner or tenant is to engage to a material degree in the management decisions related to the production of such commodities. The services which are considered of particular importance in making such management decisions are those services performed in making inspections of the production activities and in advising and consulting with such person as to the production of the commodities. Thus, if under the arrangement it is understood that the owner or tenant is to advise or consult periodically with the other person as to the production of the commodities required to be produced by such person under the arrangement and to inspect periodically the production activities on the land, a strong inference will be drawn that the arrangement contemplates participation by the owner or tenant in the management of the production of such commodities. The mere undertaking to select the crops or livestock to be produced or the type of machinery and implements to be furnished or to make decisions as to the rotation of crops generally is not, in and of itself, sufficient. Such factors may be significant, however, in making the overall determination of whether the arrangement contemplates that the owner or tenant is to participate materially in the management of the production of the commodities. Thus, if in addition to the understanding that the owner or

tenant is to advise or consult periodically with the other person as to the production of the commodities and to inspect periodically the production activities on the land, it is also understood that the owner is to select the type of crops and livestock to be produced and the type of machinery and implements to be furnished and to make decisions as to the rotation of crops, the arrangement will be treated as contemplating material participation of the owner or tenant in the management of production of such commodities.

(4) *Actual participation.* In order for the rental income received by the owner or tenant of land to be treated as includible farm rental income, not only must it be derived pursuant to the arrangement described in subparagraph (1) of this paragraph, but also the owner or tenant must actually participate to a material degree in the production or in the management of the production of any of the commodities required to be produced under the arrangement, or he must actually participate in both the production and the management of the production to an extent that his participation in the one when combined with his participation in the other will be considered participation to a material degree. If the owner or tenant shows that he periodically advises or consults with the other person, who under the arrangement produces the agricultural or horticultural commodities, as to the production of any of these commodities and also shows that he periodically inspects the production activities on the land, he will have presented strong evidence of the existence of the degree of participation contemplated by section 1402(a)(1). If, in addition to the foregoing, the owner or tenant shows that he furnishes a substantial portion of the machinery, implements, and livestock used in the production of the commodities or that he furnishes or advances funds, or assumes financial responsibility, for a substantial part of the expense involved in the production of the commodities, he will have established the existence of the degree of participation contemplated by section 1402(a)(1) and this paragraph.

(5) *Employees or agents.* An agreement entered into by an employee or agent of an owner or tenant and another person is considered to be an arrangement entered into by the owner or tenant for purposes of satisfying the requirement set forth in paragraph (b)(2) that the income must be derived under an arrangement between the owner or tenant and another person. For purposes of determining whether the arrangement satisfies the requirement set forth in paragraph (b)(3) that the parties contemplate that the owner or tenant will materially participate in the production or management of production of a commodity, services which will be performed by an employee or agent of the owner or tenant are not considered to be services which the arrangement contemplates will be performed by the owner or tenant. Services actually performed by such employee or agent are not considered services performed by the owner or tenant in determining the extent to which the owner or tenant has participated in the production or management of production of a commodity. For taxable years beginning before January 1, 1974, contemplated or actual services of an agent or an employee of the owner or tenant are deemed to be contemplated or actual services of the owner or tenant under paragraphs (b)(3) and (b)(4) of this section.

(6) *Examples.* Application of the rules prescribed in this paragraph may be illustrated by the following examples:

Example (1). After the death of her husband, Mrs. A rents her farm, together with its machinery and equipment, to B for one-half of the proceeds from the commodities produced on such farm by B. It is agreed that B will live in the tenant house on the farm and be responsible for the over-all operation of the farm, such as planting, cultivating, and harvesting the field crops, caring for the orchard and harvesting the fruit and caring for the livestock and poultry. It also is agreed that Mrs. A will continue to live in the farm residence and help B operate the farm. Under the agreement it is contemplated that Mrs. A will regularly operate and clean the cream separator and feed the poultry flock and collect the eggs. When possible she will assist B in such work as spraying the fruit trees, penning livestock, culling the poultry, and controlling weeds. She will

also assist in preparing the meals when B engages seasonal workers. The agreement between Mrs. A and B clearly provides that she will materially participate in the over-all production operations to be conducted on her farm by B. In actual practice, Mrs. A performs such regular and intermittent services. The regularly performed services are material to the production of an agricultural commodity, and the intermittent services performed are material to the production operations to which they relate. The furnishing of a substantial portion of the farm machinery and equipment also adds support to a conclusion that Mrs. A has materially participated. Accordingly, the rental income Mrs. A receives from her farm should be included in net earnings from self-employment.

Example (2). D agrees to produce a crop on C's cotton farm under an arrangement providing that C and D will each receive one-half of the proceeds from such production. C agrees to furnish all the necessary equipment, and it is understood that he is to advise D when to plant the cotton and when it needs to be chopped, plowed, sprayed, and picked. It is also understood that during the growing season C is to inspect the crop every few days to determine whether D is properly taking care of the crop. Under the arrangement, D is required to furnish all labor needed to grow and harvest the crop. C, in fact, renders such advice, makes such inspections, and furnishes such equipment. C's contemplated participation in management decisions is considered material with respect to the management of the cotton production operation. C's actual participation pursuant to the arrangement is also considered to be material with respect to the management of the production of cotton. Accordingly, the income C receives from his cotton farm is to be included in computing his net earnings from self-employment.

Example (3). E owns a grain farm and turns its operation over to his son, F. By the oral rental arrangement between E and F, the latter agrees to produce crops of grain on the farm, and E agrees that he will be available for consultation and advice and will inspect and help to harvest the crops. E furnishes most of the equipment, including a tractor, a combine, plows, wagons, drills, and harrows; he continues to live on the farm and does some of the work such as repairing barns and farm machinery, going to town for supplies, cutting weeds, etc.; he regularly inspects the crops during the growing season; and he helps F to harvest the crops. Although the final decisions are made by F, he frequently consults with his father regarding the production of the crops. An evaluation of all of E's actual activities indicates that they are sufficiently substantial and regular to support a conclusion that he is materially participating in the crop production operations and the management thereof. If it can be shown that the degree of E's actual participation was contemplated by the arrangement, E's income from the grain farm will be included in computing net earnings from self-employment.

Example (4). G owns a fully-equipped farm which he rents to H under an arrangement which contemplates that G shall materially participate in the management of the production of crops raised on the farm pursuant to the arrangement. G lives in town about 5 miles from the farm. About twice a month he visits the farm and looks over the buildings and equipment. G may occasionally, in an emergency, discuss with H some phase of a crop production activity. In effect, H has complete charge of the management of farming operations regardless of the understanding between him and G. Although G pays one-half of the cost of the seed and fertilizer and is charged for the cost of materials purchased by H to make all necessary repairs, G's activities do not constitute material participation in the crop production activities. Accordingly, G's income from the crops is not included in computing net earnings from self-employment.

Example (5). I owned a farm several miles from the town in which he lived. He rented the farm to J under an arrangement which contemplated I's material participation in the management of production of wheat. I furnished one-half of the seed and fertilizer and all the farm equipment and livestock. He employed K to perform all the services in advising, consulting, and inspecting contemplated by the arrangement. I is not materially participating in the management of production of wheat by J. The work done by I's employee, K, is not attributable to I in determining the extent of I's participation. I's rental income from the arrangement is, therefore, not to be included in computing his net earnings from self-employment. For taxable years beginning before January 1, 1974, however, I's rental income would be includible in those earnings.

Example (6). L, a calendar-year taxpayer, appointed M as his agent to rent his fully equipped farm for 1974. M entered into a rental arrangement with N under which M was to direct the planting of crops, inspect them weekly during the growing season, and consult with N on any problems that might arise in connection with irrigation, etc., while N furnished all the labor needed to grow and harvest the crops. M did in fact fulfill its responsibilities under the arrangement. Although the arrangement entered into by M and N is considered to have been made by L, M's services are not attributable to L, and L's furnishing of a fully equipped farm is insufficient by itself to constitute material participation in the production of the crops. Accordingly, L's rental income from the arrangement is not included in his

net earnings from self-employment for that year. For taxable years beginning before January 1, 1974, however, L's rental income would be includible in those earnings.

(c) *Rentals from living quarters*—(1) *No services rendered for occupants.* Payments for the use or occupancy of entire private residences or living quarters in duplex or multiple-housing units are generally rentals from real estate. Except in the case of real-estate dealers, such payments are excluded in determining net earnings from self-employment even though such payments are in part attributable to personal property furnished under the lease.

(2) *Services rendered for occupants.* Payments for the use or occupancy of rooms or other space where services are also rendered to the occupant, such as for the use or occupancy of rooms or other quarters in hotels, boarding houses, or apartment houses furnishing hotel services, or in tourist camps or tourist homes, or payments for the use or occupancy of space in parking lots, warehouses, or storage garages, do not constitute rentals from real estate; consequently, such payments are included in determining net earnings from self-employment. Generally, services are considered rendered to the occupant if they are primarily for his convenience and are other than those usually or customarily rendered in connection with the rental of rooms or other space for occupancy only. The supplying of maid service, for example, constitutes such service; whereas the furnishing of heat and light, the cleaning of public entrances, exits, stairways and lobbies, the collection of trash, and so forth, are not considered as services rendered to the occupant.

(3) *Example.* The application of this paragraph may be illustrated by the following example:

Example. A, an individual, owns a building containing four apartments. During the taxable year, he receives $1,400 from apartments numbered 1 and 2, which are rented without services rendered to the occupants, and $3,600 from apartments numbered 3 and 4, which are rented with services rendered to the occupants. His fixed expenses for the four apartments aggregate $1,200 during the taxable year. In addition, he has $500 of expenses attributable to the services rendered to the occupants of apartments 3 and 4. In determining his net earnings from self-employment, A includes the $3,600 received from apartments 3 and 4, and the expenses of $1,100 ($500 plus one-half of $1,200) attributable thereto. The rentals and expenses attributable to apartments 1 and 2 are excluded. Therefore, A has $2,500 of net earnings from self-employment for the taxable year from the building.

(d) *Treatment of business income which includes rentals from real estate.* Except in the case of a real-estate dealer, where an individual or a partnership is engaged in a trade or business the income of which is classifiable in part as rentals from real estate, only that portion of such income which is not classifiable as rentals from real estate, and the expenses attributable to such portion, are included in determining net earnings from self-employment.

[T.D. 6691, 28 FR 12796, Dec. 3, 1963, as amended by T.D. 7710, 45 FR 50739, July 31, 1980]

§ 1.1402(a)–5 Dividends and interest.

(a) All dividends on shares of stock are excluded unless they are received by an individual in the course of his trade or business as a dealer in stocks or securities.

(b) Interest on any bond, debenture, note, or certificate, or other evidence of indebtedness, issued with interest coupons or in registered form by any corporation (including one issued by a government or political subdivision thereof) is excluded unless such interest is received in the course of a trade or business as a dealer in stocks or securities. However, interest with respect to which a credit against tax is allowable as provided in section 35, that is, interest on certain obligations of the United States and its instrumentalities, is not included in net earnings from self-employment even though received in the course of a trade or business as a dealer in stocks or securities. Only interest on bonds, debentures, notes, or certificates, or other evidence of indebtedness, issued with interest coupons or in registered form by a corporation, is excluded in the case of all persons other than dealers in stocks or securities; other interest received in the course of any trade or business (such as interest received by a pawnbroker on his loans or interest received by a merchant on his accounts or notes receivable) is not excluded.

(c) Dividends and interest of the character excludable under paragraphs (a) and (b) of this section received by an individual on stocks or securities held for speculation or investment are excluded whether or not the individual is a dealer in stocks or securities.

(d) A dealer in stocks or securities is a merchant of stocks or securities with an established place of business, regularly engaged in the business of purchasing stocks or securities and reselling them to customers; that is, he is one who as a merchant buys stocks or securities and sells them to customers with a view to the gains and profits that may be derived therefrom. Persons who buy and sell or hold stocks or securities for investment or speculation, irrespective of whether such buying or selling constitutes the carrying on of a trade or business, are not dealers in stocks or securities.

§ 1.1402(a)–6 Gain or loss from disposition of property.

(a) There is excluded any gain or loss: (1) Which is considered as gain or loss from the sale or exchange of a capital asset; (2) from the cutting of timber or the disposal of timber, coal, or iron ore, even though held primarily for sale to customers, if section 631 is applicable to such gain or loss; and (3) from the sale, exchange, involuntary conversion, or other disposition of property if such property is neither (i) stock in trade or other property of a kind which would properly be includible in inventory if on hand at the close of the taxable year, nor (ii) property held primarily for sale to customers in the ordinary course of a trade or business. For the purpose of the special rule in subparagraph (3) of this paragraph, it is immaterial whether a gain or loss is treated as a capital gain or loss or as an ordinary gain or loss for purposes other than determining net earnings from self-employment. For instance, where the character of a loss is governed by the provisions of section 1231, such loss is excluded in determining net earnings from self-employment even though such loss is treated under section 1231 as an ordinary loss. For the purposes of this special rule, the term ''involuntary conversion'' means a compulsory or involuntary conversion of property into other property or money as a result of its destruction in whole or in part, theft or seizure, or an exercise of the power of requisition or condemnation or the threat or imminence thereof; and the term ''other dispostion'' includes the destruction or loss, in whole or in part, of property by fire, storm, shipwreck, or other casualty, or by theft, even though there is no conversion of such property into other property or money.

(b) The application of this section may be illustrated by the following example:

Example. During the taxable year 1954, A, who owns a grocery store, realized a net profit of $1,500 from the sale of groceries and a gain of $350 from the sale of a refrigerator case. During the same year, he sustained a loss of $2,000 as a result of damage by fire to the store building. In computing taxable income, all of these items are taken into account. In determining net earnings from self-employment, however, only the $1,500 of profit derived from the sale of groceries is included. The $350 gain and the $2,000 loss are excluded.

[T.D. 6691, 28 FR 12796, Dec. 3, 1963, as amended by T.D. 6841, 30 FR 9309, July 27, 1965]

§ 1.1402(a)–7 Net operating loss deduction.

The deduction provided by section 172, relating to net operating losses sustained in years other than the taxable year, is excluded.

§ 1.1402(a)–8 Community income.

(a) *In case of an individual.* If any of the income derived by an individual from a trade or business (other than a trade or business carried on by a partnership) is community income under community property laws applicable to such income, all of the gross income, and the deductions attributable to such income, shall be treated as the gross income and deductions of the husband unless the wife exercises substantially all of the management and control of such trade or business, in which case all of such gross income and deductions shall be treated as the gross income and deductions of the wife. For the purpose of this special rule, the term ''management and control'' means management and control in fact, not the management and control imputed to the husband under the community

property laws. For example, a wife who operates a beauty parlor without any appreciable collaboration on the part of her husband will be considered as having substantially all of the management and control of such business despite the provision of any community property law vesting in the husband the right of management and control of community property; and the income and deductions attributable to the operation of such beauty parlor will be considered the income and deductions of the wife.

(b) *In case of a partnership.* Even though a portion of a partner's distributive share of the income or loss, described in section 702(a)(9), from a trade or business carried on by a partnership is community income or loss under the community property laws applicable to such share, all of such distributive share shall be included in computing the net earnings from self-employment of such partner; no part of such share shall be taken into account in computing the net earnings from self-employment of the spouse of such partner. In any case in which both spouses are members of the same partnership, the distributive share of the income or loss of each spouse is included in computing the net earnings from self-employment of that spouse.

§ 1.1402(a)–9 Puerto Rico.

(a) *Residents.* A resident of Puerto Rico, whether or not a bona fide resident thereof during the entire taxable year, and whether or not an alien, a citizen of the United States, or a citizen of Puerto Rico, shall compute his net earnings from self-employment in the same manner as would a citizen of the United States residing in the United States. See paragraph (d) of § 1.1402(b)–1 for regulations relating to nonresident aliens. For the purpose of the tax on self-employment income, the gross income of such a resident of Puerto Rico also includes income from Puerto Rican sources. Thus, under this special rule, income from Puerto Rican sources will be included in determining net earnings from self-employment of a resident of Puerto Rico engaged in the active conduct of a trade or business in Puerto Rico despite the fact that, under section 933, such income may not be taken into account for purposes of the tax under section 1 or 3.

(b) *Nonresidents.* A citizen of Puerto Rico who is also a citizen of the United States and who is not a resident of Puerto Rico will compute his net earnings from self-employment in the same manner and subject to the same provisions of law and regulations as other citizens of the United States.

§ 1.1402(a)–10 Personal exemption deduction.

The deduction provided by section 151, relating to personal exemptions, is excluded.

§ 1.1402(a)–11 Ministers and members of religious orders.

(a) *In general.* For each taxable year ending after 1954 in which a minister or member of a religious order is engaged in a trade or business, within the meaning of section 1402(c) and § 1.1402(c)–5, with respect to service performed in the exercise of his ministry or in the exercise of duties required by such order, net earnings from self-employment from such trade or business include the gross income derived during the taxable year from any such service, less the deductions attributable to such gross income. For each taxable year ending on or after December 31, 1957, such minister or member of a religious order shall compute his net earnings from self-employment derived from the performance of such service without regard to the exclusions from gross income provided by section 107 (relating to rental value of parsonages) and section 119 (relating to meals and lodging furnished for the convenience of the employer). Thus, a minister who is subject to self-employment tax with respect to his services as a minister will include in the computation of his net earnings from self-employment for a taxable year ending on or after December 31, 1957, the rental value of a home furnished to him as remuneration for services performed in the exercise of his ministry or the rental allowance paid to him as remuneration for such services irrespective of whether such rental value or rental allowance is excluded from gross income by section 107. Similarly, the value of any meals or lodging furnished to a minister or to

a member of a religious order in connection with service performed in the exercise of his ministry or as a member of such order will be included in the computation of his net earnings from self-employment for a taxable year ending on or after December 31, 1957, notwithstanding the exclusion of such value from gross income by section 119.

(b) *In employ of American employer*. If a minister or member of a religious order engaged in a trade or business described in section 1402(c) and § 1.1402(c)–5 is a citizen of the United States and performs service, in his capacity as a minister or member of a religious order, as an employee of an American employer, as defined in section 3121(h) and the regulations thereunder in part 31 of this chapter (Employment Tax Regulations), his net earnings from self-employment derived from such service shall be computed as provided in paragraph (a) of this section but without regard to the exclusions from gross income provided in section 911, relating to earned income from sources without the United States, and section 931, relating to income from sources within certain possessions of the United States. Thus, even though all the income of the minister or member for service of the character to which this paragraph is applicable was derived from sources without the United States, or from sources within certain possessions of the United States, and therefore may be excluded from gross income, such income is included in computing net earnings from self-employment.

(c) *Minister in a foreign country whose congregation is composed predominantly of citizens of the United States*—(1) *Taxable years ending after 1956*. For any taxable year ending after 1956, a minister of a church, who is engaged in a trade or business within the meaning of section 1402(c) and § 1.1402(c)–5, is a citizen of the United States, is performing service in the exercise of his ministry in a foreign country, and has a congregation composed predominantly of United States citizens, shall compute his net earnings from self-employment derived from his services as a minister for such taxable year without regard to the exclusion from gross income provided in section 911, relating to earned income from sources without the United States. For taxable years ending on or after December 31, 1957, such minister shall also disregard sections 107 and 119 in the computation of his net earnings from self-employment. (See paragraph (a) of this section.) For purposes of section 1402(a)(8) and this paragraph a ''congregation composed predominantly of citizens of the United States'' means a congregation the majority of which throughout the greater portion of its minister's taxable year were United States citizens.

(2) *Election for taxable years ending after 1954 and before 1957*. (i) A minister described in subparagraph (1) of this paragraph who, for a taxable year ending after 1954 and before 1957, had income from service described in such subparagraph which would have been included in computing net earnings from self-employment if such income had been derived in a taxable year ending after 1956 by an individual who had filed a waiver certificate under section 1402(e), may elect to have section 1402(a)(8) and subparagraph (1) of this paragraph apply to his income from such service for his taxable years ending after 1954 and before 1957. If such minister filed a waiver certificate prior to August 1, 1956, in accordance with § 1.1402(e)(1)–1, or he files such a waiver certificate on or before the due date of his return (including any extensions thereof) for his last taxable year ending before 1957, he must make such election on or before the due date of his return (including any extensions thereof) for such taxable year or before April 16, 1957, whichever is the later. If the waiver certificate is not so filed, the minister must make his election on or before the due date of the return (including any extensions thereof) for his first taxable year ending after 1956. Notwithstanding the expiration of the period prescribed by section 1402(e)(2) for filing such waiver, the minister may file a waiver certificate at the time he makes the election. In no event shall an election be valid unless the minister files prior to or at the time of the election a waiver certificate in accordance with § 1.1402(e)(1)–1.

(ii) The election shall be made by filing with the district director of internal revenue with whom the waiver certificate, Form 2031, is filed a written statement indicating that, by reason of the Social Security Amendments of 1956, the minister desires to have the Federal old-age, survivors, and disability insurance system established by title II of the Social Security Act extended to his services performed in a foreign country as a minister of a congregation composed predominantly of United States citizens beginning with the first taxable year ending after 1954 and prior to 1957 for which he had income from such services. The statement shall be dated and signed by the minister and shall clearly state that it is an election for retroactive self-employment tax coverage under the Self-Employment Contributions Act of 1954. In addition, the statement shall include the following information:

(*a*) The name and address of the minister.

(*b*) His social security account number, if he has one.

(*c*) That he is a duly ordained, commissioned, or licensed minister of a church.

(*d*) That he is a citizen of the United States.

(*e*) That he is performing services in the exercise of his ministry in a foreign country.

(*f*) That his congregation is composed predominantly of citizens of the United States.

(*g*)(*1*) That he has filed a waiver certificate and, if so, where and under what circumstances the certificate was filed and the taxable year for which it is effective; or (*2*) that he is filing a waiver certificate with his election for retroactive coverage and, if so, the taxable year for which it is effective.

(*h*) That he has or has not filed income tax returns for his taxable years ending after 1954 and before 1957. If he has filed such returns, he shall state the years for which they were filed and indicate the district director of internal revenue with whom they were filed.

(iii) Notwithstanding section 1402(e)(3), a waiver certificate filed pursuant to §1.1402(e)(1)–1 by a minister making an election under this paragraph shall be effective (regardless of when such certificate is filed) for such minister's first taxable year ending after 1954 in which he had income from service described in subparagraph (1) of this paragraph or for the taxable year of the minister prescribed by section 1402(e)(3), if such taxable year is earlier, and for all succeeding taxable years.

(iv) No interest or penalty shall be assessed or collected for failure to file a return within the time prescribed by law if such failure arises solely by reason of an election made by a minister pursuant to this paragraph or for any underpayment of self-employment income tax arising solely by reason of such election, for the period ending with the date such minister makes an election pursuant to this paragraph.

(d) *Treatment of certain remuneration paid in 1955 and 1956 as wages.* For treatment of remuneration paid to an individual for service described in section 3121(b)(8)(A) which was erroneously treated by the organization employing him as employment with-in the meaning of chapter 21 of the Internal Revenue Code, see §1.1402(e)(4)–1.

[T.D. 6691, 28 FR 12796, Dec. 3, 1963, as amended by T.D. 9194, 70 FR 18946, Apr. 11, 2005]

§ 1.1402(a)–12 Continental shelf and certain possessions of the United States.

(a) *Certain possessions.* For purposes of the tax on self-employment income, the exclusion from gross income provided by section 931 (relating to bona fide residents of certain possessions of the United States) will not apply. Net earnings from self-employment are subject to the tax on self-employment income even if such amounts are excluded from gross income under section 931.

(b) *Continental shelf.* For the definition of the term ''United States'' and for other geographical definitions relating to the continental shelf, see section 638 and §1.638–1.

(c) *Effective/applicability date.* This section applies to taxable years ending after April 9, 2008.

[T.D. 9391, 73 FR 19376, Apr. 9, 2008]

§ 1.1402(a)–13 Income from agricultural activity.

(a) *Agricultural trade or business.* (1) An agricultural trade or business is one in which, if the trade or business were carried on exclusively by employees, the major portion of the services would constitute agricultural labor as defined in section 3121(g) and the regulations thereunder in part 31 of this chapter (Employment Tax Regulations). In case the services are in part agricultural and in part nonagricultural, the time devoted to the performance of each type of service is the test to be used to determine whether the major portion of the services would constitute agricultural labor. If more than half of the time spent in performing all the services is spent in performing services which would constitute agricultural labor under section 3121(g), the trade or business is agricultural. If only half, or less, of the time spent in performing all the services is spent in performing services which would constitute agricultural labor under section 3121(g), the trade or business is not agricultural. In every case the time spent in performing the services will be computed by adding the time spent in the trade or business during the taxable year by every individual (including the individual carrying on such trade or business and the members of his family) in performing such services. The operation of this special rule is not affected by section 3121(c), relating to the included-excluded rule for determining employment.

(2) The rules prescribed in subparagraph (1) of this paragraph have no application where the nonagricultural services are performed in connection with an enterprise which constitutes a trade or business separate and distinct from the trade or business conducted as an agricultural enterprise. Thus, the operation of a roadside automobile service station on farm premises constitutes a trade or business separate and distinct from the agricultural enterprise, and the gross income derived from such service station, less the deductions attributable thereto, is to be taken into account in determining net earnings from self-employment.

(b) *Farm operator's income for taxable years ending before 1955.* Income derived in a taxable year ending before 1955 from any agricultural trade or business (see paragraph (a) of this section), and all deductions attributable to such income, are excluded in computing net earnings from self-employment.

(c) *Farm operator's income for taxable years ending after 1954.* Income derived in a taxable year ending after 1954 from an agricultural trade or business (see paragraph (a) of this section) is includible in computing net earnings from self-employment. Income derived from an agricultural trade or business includes income derived by an individual under an agreement entered into by such individual with another person pursuant to which such individual undertakes to produce agricultural or horticultural commodities (including livestock, bees, poultry, and fur-bearing animals and wildlife) on land owned or leased by such other person and pursuant to which the agricultural or horticultural commodities produced by such individual, or the proceeds therefrom, are to be divided between such individual and such other person, and the amount of such individual's share depends on the amount of the agricultural or horticultural commodities produced. However, except as provided in paragraph (d) of this section, relating to arrangements involving material participation, the income derived under such an agreement by the owner or lessee of the land is not includible in computing net earnings from self-employment. See § 1.1402(a)–4. For options relating to the computation of net earnings from self-employment, see §§ 1.1402(a)–14 and 1.1402(a)–15.

(d) *Includible farm rental income for taxable years ending after 1955.* For taxable years ending after 1955, income derived from an agricultural trade or business (see paragraph (a) of this section) includes also income derived by the owner or tenant of land under an arrangement between such owner or tenant and another person, if such arrangement provides that such other person shall produce agricultural or horticultural commodities (including livestock, bees, poultry, and fur-bearing animals and wildlife) on such land, and that there shall be material participation by the owner or tenant in the production or the management of

the production of such agricultural or horticultural commodities, and if there is material participation by the owner or tenant with respect to any such agricultural or horticultural commodity. See paragraph (b) of § 1.1402(a)–4. For options relating to the computation of net earnings from self-employment, see §§ 1.1402(a)–14 and 1.1402(a)–15.

(e) *Income from service performed after 1956 as a crew leader*. Income derived by a crew leader (see section 3121(o) and the regulations thereunder in Part 31 of this chapter (Employment Tax Regulations)) from service performed after 1956 in furnishing individuals to perform agricultural labor for another person and from service performed after 1956 in agricultural labor as a member of the crew is considered to be income derived from a trade or business for purposes of § 1.1402(c)–1. Whether such trade or business is an agricultural trade or business shall be determined by applying the rules set forth in this section.

§ 1.1402(a)–14 Options available to farmers in computing net earnings from self-employment for taxable years ending after 1954 and before December 31, 1956.

(a) *Computation of net earnings*. In the case of any trade or business which is carried on by an individual who reports his income on the cash receipts and disbursements method, and in which, if it were carried on exclusively by employees, the major portion of the services would constitute agricultural labor as defined in section 3121(g) (see paragraph (a) of § 1.1402(a)–13), net earnings from self-employment may, for a taxable year ending after 1954, at the option of the taxpayer, be computed as follows:

(1) *Gross income $1,800 or less*. If the gross income, computed as provided in paragraph (b) of this section, from such trade or business is $1,800 or less, the taxpayer may, at his option, treat as net earnings from self-employment from such trade or business an amount equal to 50 percent of such gross income. If the taxpayer so elects, the amount equal to 50 percent of such gross income shall be used in computing his self-employment income in lieu of his actual net earnings from such trade or business, if any.

(2) *Gross income in excess of $1,800*. If the gross income, computed as provided in paragraph (b) of this section, from such trade or business is more than $1,800, and the actual net earnings from self-employment from such trade or business are less than $900, the taxpayer may, at his option, treat $900 as net earnings from self-employment. If the taxpayer so elects, $900 shall be used in computing his self-employment income in lieu of his actual net earnings from such trade or business, if any. However, if the taxpayer's actual net earnings from such trade or business, as computed in accordance with §§ 1.1402(a)–1 through 1.1402(a)–3 are $900 or more, such actual net earnings shall be used in computing his self-employment income.

(b) *Computation of gross income*. For purposes of paragraph (a) of this section, gross income shall consist of the gross receipts from such trade or business reduced by the cost or other basis of property which was purchased and sold in carrying on such trade or business, adjusted (after such reduction) in accordance with the provisions of § 1.1402(a)–3, relating to income and deductions not included in computing net earnings from self-employment.

(c) *Two or more agricultural activities*. If an individual is engaged in more than one agricultural trade or business within the meaning of paragraph (a) of § 1.1402(a)–13 (for example, the business of ordinary farming and the business of cotton ginning), the gross income derived from each agricultural trade or business shall be aggregated for purposes of the optional method provided in paragraph (a) of this section for computing net earnings from self-employment.

(d) *Examples*. Application of the regulations prescribed in paragraphs (a) and (b) of this section may be illustrated by the following examples:

Example (1). F, a farmer, uses the cash receipts and disbursements method of accounting in making his income tax returns. F's books and records show that during the calendar year 1955 he received $1,200 from the sale of produce raised on the farm, $200 from the sale of livestock raised on the farm and not held for breeding or dairy purposes, and $600 from the sale of a tractor. The income from the sale of the tractor is of a type which is excluded from net earnings from

self-employment by section 1402(a). F's actual net earnings from self-employment, computed in accordance with the provisions of §§ 1.1402(a)–1 through 1.1402(a)–3, are $450. F may report $450 as his net earnings from self-employment or he may elect to report $700 (one-half of $1,400).

Example (2). C, a cattleman, uses the cash receipts and disbursements method of accounting in making his income tax returns. C had actual net earnings from self-employment, computed in accordance with the provisions of §§ 1.1402(a)–1 through 1.1402(a)–3, of $725. His gross receipts were $1,000 from the sale of produce raised on the farm and $1,200 from the sale of feeder cattle, which C bought for $500. The income from the sale of the feeder cattle is of a type which is included in computing net earnings from self-employment. Therefore, C may report $725 as his net earnings from self-employment or he may elect to report $850, one-half of $1,700 ($2,200 minus $500).

Example (3). R, a rancher, has gross income of $3,000 from the operation of his ranch, computed as provided in paragraph (b) of this section. His actual net earnings from self-employment from farming activities are less than $900. R, nevertheless, may elect to report $900 as net earnings from self-employment from such trade or business. If R had actual net earnings from self-employment from his farming activities in the amount of $900 or more, he would be required to report such amount in computing his self-employment income.

(e) *Members of farm partnerships.* The optional method provided by paragraph (a) of this section for computing net earnings from self-employment is not available to a member of a partnership with respect to his distributive share of the income or loss from any trade or business carried on by any partnership of which he is a member.

§ 1.1402(a)–15 Options available to farmers in computing net earnings from self-employment for taxable years ending on or after December 31, 1956.

(a) *Computation of net earnings.* In the case of any trade or business which is carried on by an individual or by a partnership and in which, if such trade or business were carried on exclusively by employees, the major portion of the services would constitute agricultural labor as defined in section 3121(g) (see paragraph (a) of § 1.1402(a)–13), net earnings from self-employment may, for a taxable year ending on or after December 31, 1956, at the option of the taxpayer, be computed as follows:

(1) *In case of an individual*—(i) *Gross income of less than specified amount.* If the gross income, computed as provided in paragraph (b) of this section, from such trade or business is $2,400 or less ($1,800 or less for a taxable year ending on or after December 31, 1956, and beginning before January 1, 1966), the taxpayer may, at his option, treat as net earnings from self-employment from such trade or business an amount equal to 66⅔ percent of such gross income. If the taxpayer so elects, the amount equal to 66⅔ percent of such gross income shall be used in computing his self-employment income in lieu of his actual net earnings from such trade or business, if any.

(ii) *Gross income in excess of specified amount.* If the gross income, computed as provided in paragraph (b) of this section, from such trade or business is more than $2,400 ($1,800 for a taxable year ending on or after December 31, 1956, and beginning before January 1, 1966), and the net earnings from self-employment from such trade or business (computed without regard to this section) are less than $1,600 ($1,200 for a taxable year ending on or after December 31, 1956, and beginning before January 1, 1966), the taxpayer may, at his option, treat $1,600 ($1,200 for a taxable year ending on or after December 31, 1956, and beginning before January 1, 1966) as net earnings from self-employment. If the taxpayer so elects, $1,600 ($1,200 for a taxable year ending on or after December 31, 1956, and beginning before January 1, 1966) shall be used in computing his self-employment income in lieu of his actual net earnings from such trade or business, if any. However, if the taxpayer's actual net earnings from such trade or business, as computed in accordance with the applicable provisions of §§ 1.1402(a)–1 to 1.1402(a)–13, inclusive, are $1,600 or more ($1,200 or more for a taxable year ending on or after December 31, 1956, and beginning before January 1, 1966) such actual net earnings shall be used in computing his self-employment income.

(2) *In case of a member of a partnership*—(i) *Distributive share of gross income of less than specified amount.* If a

taxpayer's distributive share of the gross income of a partnership (as such gross income is computed under the provisions of paragraph (b) of this section) derived from such trade or business (after such gross income has been reduced by the sum of all payments to which section 707(c) applies) is $2,400 or less ($1,800 or less for a taxable year ending on or after December 31, 1956, and beginning before January 1, 1966), the taxpayer may, at his option, treat as his distributive share of income described in section 702(a)(9) derived from such trade or business an amount equal to 66⅔ percent of his distributive share of such gross income (after such gross income has been reduced by the sum of all payments to which section 707(c) applies). If the taxpayer so elects, the amount equal to 66⅔ percent of his distributive share of such gross income shall be used by him in the computation of his net earnings from self-employment in lieu of the actual amount of his distributive share of income described in section 702(a)(9) from such trade or business, if any.

(ii) *Distributive share of gross income in excess of specified amount.* If a taxpayer's distributive share of the gross income of the partnership (as such gross income is computed under the provisions of paragraph (b) of this section) derived from such trade or business (after such gross income has been reduced by the sum of all payments to which section 707(c) applies) is more than $2,400 ($1,800 for a taxable year ending on or after December 31, 1956, and beginning before January 1, 1966) and the actual amount of his distributive share (whether or not distributed) of income described in section 702(a)(9) derived from such trade or business (computed without regard to this section) is less than $1,600 ($1,200 for a taxable year ending on or after December 31, 1956, and beginning before January 1, 1966), the taxpayer may, at his option, treat $1,600 ($1,200 for a taxable year ending on or after December 31, 1956, and beginning before January 1, 1966) as his distributive share of income described in section 702(a)(9) derived from such trade or business. If the taxpayer so elects, $1,600 ($1,200 for a taxable year ending on or after December 31, 1956, and beginning before January 1, 1966) shall be used by him in the computation of his net earnings from self-employment in lieu of the actual amount of his distributive share of income described in section 702(a)(9) from such trade or business, if any. However, if the actual amount of the taxpayer's distributive share of income described in section 702(a)(9) from such trade or business, as computed in accordance with the applicable provisions of §§ 1.1402(a)–1 to 1.1402(a)–13, inclusive, is $1,600 or more ($1,200 or more for a taxable year ending on or after December 31, 1956, and beginning before January 1, 1966), such actual amount of the taxpayer's distributive share shall be used in computing his net earnings from self-employment.

(iii) *Cross reference.* For a special rule in the case of certain deceased partners, see paragraph (c) of § 1.1402(f)–1.

(b) *Computation of gross income.* For purposes of this section gross income has the following meanings:

(1) In the case of any such trade or business in which the income is computed under a cash receipts and disbursements method, the gross receipts from such trade or business reduced by the cost or other basis of property which was purchased and sold in carrying on such trade or business (see paragraphs (a) and (c), other than paragraph (a)(5), of § 1.61–4), adjusted (after such reduction) in accordance with the applicable provisions of §§ 1.1402(a)–3 to 1.1402(a)–13, inclusive.

(2) In the case of any such trade or business in which the income is computed under an accrual method (see paragraphs (b) and (c), other than paragraph (b)(5), of § 1.61–4), the gross income from such trade or business, adjusted in accordance with the applicable provisions of §§ 1.1402(a)–3 to 1.1402(a)–13, inclusive.

(c) *Two or more agricultural activities.* If an individual (including a member of a partnership) derives gross income (as defined in paragraph (b) of this section) from more than one agricultural trade or business, such gross income (including his distributive share of the gross income of any partnership derived from any such trade or business) shall be deemed to have been derived from one trade or business. Thus, such an individual shall aggregate his gross income

derived from each agricultural trade or business carried on by him (which includes, under paragraph (b) of § 1.1402(a)–1, any guaranteed payment, within the meaning of section 707(c), received by him from a farm partnership of which he is a member) and his distributive share of partnership gross income (after such gross income has been reduced by any guaranteed payment within the meaning of section 707(c)) derived from each farm partnership of which he is a member. Such gross income is the amount to be considered for purposes of the optional method provided in this section for computing net earnings from self-employment. If the aggregate gross income of an individual includes income derived from an agricultural trade or business carried on by him and a distributive share of partnership income derived from an agricultural trade or business carried on by a partnership of which he is a member, such aggregate gross income shall be treated as income derived from a single trade or business carried on by him, and such individual shall apply the optional method applicable to individuals set forth in paragraph (a)(1) of this section for purposes of computing his net earnings from self-employment.

(d) *Examples*. The application of this section may be illustrated by the following examples:

Example (1). F is engaged in the business of farming and computes his income under the cash receipts and disbursements method. He files his income tax returns on the basis of the calendar year. During the year 1966, F's gross income from the business of farming (computed in accordance with paragraph (b)(1) of this section) is $2,325. His actual net earnings from self-employment derived from such business are $1,250. As his net earnings from self-employment, F may report $1,250 or, by the optional computation method, he may report $1,550 (66⅔ percent of $2,325).

Example (2). G is engaged in the business of farming and computes his income under the accrual method. His income tax returns are filed on the calendar year basis. For the year 1966, G's gross income from the operation of his farm (computed in accordance with paragraph (b)(2) of this section) is $2,800. He has actual net earnings from self-employment derived from such farm in the amount of $1,250. As his net earnings from self-employment derived from his farm, G may report his actual net earnings of $1,250, or by the optional method he may report $1,600. If G's actual net earnings from self-employment from his farming activities for 1966 were in an amount of $1,600 or more, he would be required to report such amount in computing his self-employment income.

Example (3). M, who files his income tax returns on a calendar year basis, is one of the three partners of the XYZ Company, a partnership, engaged in the business of farming. The taxable year of the partnership is the calendar year, and its income is computed under the cash receipts and disbursements method. For M's services in connection with the planting, cultivating, and harvesting of the crops during the year 1966 the partnership agrees to pay him $500, the full amount of which is determined without regard to the income of the partnership and constitutes a guaranteed payment within the meaning of section 707(c). This guaranteed payment to M is the only such payment made during such year. The gross income derived from the business for the year 1966 computed in accordance with paragraph (b)(1) of this section and after being reduced by the guaranteed payment of $500 made to M, is $3,000. One-third of the $3,000 ($1,000), is M's distributive share of such gross income. Under paragraph (c) of this section, the guaranteed payment ($500) received by M and his distributive share of the partnership gross income ($1,000) are deemed to have been derived from one trade or business, and such amounts must be aggregated for purposes of the optional method of computing net earnings from self-employment. Since M's combined gross income from his two agricultural businesses ($1,000 and $500) is not more than $2,400 and since such income is deemed to be derived from one trade or business, M's net earnings from self-employment derived from such farming business may, at his option, be deemed to be $1,000 (66⅔ percent of $1,500).

Example (4). A is one of the two partners of the AB partnership which is engaged in the business of farming. The taxable year of the partnership is the calendar year and its income is computed under the accrual method. A files his income tax returns on the calendar year basis. The partnership agreement provides for an equal sharing in the profits and losses of the partnership by the two partners. A is an experienced farmer and for his services as manager of the partnership's farm activities during the year 1966 he receives $6,000 which amount constitutes a guaranteed payment within the meaning of section 707(c). The gross income of the partnership derived from such business for the year 1966, computed in accordance with paragraph (b)(2) of this section and after being reduced by the guaranteed payment made to A, is $9,600. A's distributive share of such gross income is $4,800 and his distributive share of income described in section 702(a)(9) derived from the partnership's business is $1,900.

Under paragraph (c) of this section, the guaranteed payment received by A and his distributive share of the partnership gross income are deemed to have been derived from one trade or business, and such amounts must be aggregated for purposes of the optional method of computing his net earnings from self-employment. Since the aggregate of A's guaranteed payment ($6,000) and his distributive share of partnership gross income ($4,800) is more than $2,400 and since the aggregate of A's guaranteed payment ($6,000) and his distributive share ($1,900) of partnership income described in section 702(a)(9) is not less than $1,600, the optional method of computing net earnings from self-employment is not available to A.

Example (5). F is a member of the EFG partnership which is engaged in the business of farming. F files his income tax returns on the calendar year basis. The taxable year of the partnership is the calendar year, and its income is computed under a cash receipts and disbursements method. Under the partnership agreement the partners are to share equally the profits or losses of the business. The gross income derived from the partnership business for the year 1966, computed in accordance with paragraph (b)(1) of this section is $7,500. F's share of such gross income is $2,500. Due to drought and an epidemic among the livestock, the partnership sustains a net loss of $7,800 for the year 1966 of which loss F's share is $2,600. Since F's distributive share of gross income derived from such business is in excess of $2,400 and since F does not receive income described in section 702(a)(9) of $1,600 or more from such business, he may, at his option, be deemed to have received $1,600 as his distributive share of income described in section 702(a)(9) from such business.

[T.D. 6691, 28 FR 12796, Dec. 3, 1963, as amended by T.D. 6993, 34 FR 828, Jan. 18, 1969]

§ 1.1402(a)–16 Exercise of option.

A taxpayer shall, for each taxable year with respect to which he is eligible to use the optional method described in § 1.1402(a)–14 or § 1.1402(a)–15, make a determination as to whether his net earnings from self-employment are to be computed in accordance with such method. If the taxpayer elects the optional method for a taxable year, he shall signify such election by computing net earnings from self-employment under the optional method as set forth in Schedule F (Form 1040) of the income tax return filed by the taxpayer for such taxable year. If the optional method is not elected at the time of the filing of the return for a taxable year with respect to which the taxpayer is eligible to elect such optional method, such method may be elected on an amended return (or on such other form as may be prescribed for such use) filed within the period prescribed by section 6501 and the regulations thereunder for the assessment of the tax for such taxable year. If the optional method is elected on a return for a taxable year, the taxpayer may revoke such election by filing an amended return (or such other form as may be prescribed for such use) for the taxable year within the period prescribed by section 6501 and the regulations thereunder for the assessment of the tax for such taxable year. If the taxpayer is deceased or unable to make an election, the person designated in section 6012(b) and the regulations thereunder may, within the period prescribed in this section elect the optional method for any taxable year with respect to which the taxpayer is eligible to use the optional method and revoke an election previously made by or for the taxpayer.

§ 1.1402(a)–17 Retirement payments to retired partners.

(a) *In general.* There shall be excluded, in computing net earnings from self-employment for taxable years ending on or after December 31, 1967, certain payments made on a periodic basis by a partnership, pursuant to a written plan of the partnership, to a retired partner on account of his retirement. The exclusion applies only if the payments are made pursuant to a plan which meets the requirements prescribed in paragraph (b) of this section, and, in addition, the conditions set forth in paragraph (c) of this section are met.

(b) *Retirement plan of partnership.* (1) To meet the requirements of section 1402(a)(10), the written plan of the partnership must set forth the terms and conditions of the program or system established by the partnership for the purpose of making payments to retired partners on account of their retirement. To qualify as payments on account of retirement, the payments must constitute bona fide retirement income. Thus, payments of benefits not customarily included in a pension or retirement plan such as layoff benefits

are not payments on account of retirement. Eligibility for retirement generally is established on the basis of age, physical condition, or a combination of age or physical condition and years of service. Generally, retirement benefits are measured by, and based on, such factors as years of service and compensation received. In determining whether the plan of the partnership provides for payments on account of retirement, factors, formulas, etc., reflected in public, and in broad based private, pension or retirement plans in prescribing eligibility requirements and in computing benefits may be taken into account.

(2) The plan of the partnership must provide for payments on account of retirement:

(i) To partners generally or to a class or classes of partners,

(ii) On a periodic basis, and

(iii) Which continue at least until the partner's death.

For purposes of subdivision (i) of this subparagraph, a class of partners may, in an appropriate case, contain only one member. Payments are made on a periodic basis if made at regularly recurring intervals (usually monthly) not exceeding one year.

(c) *Conditions relating to exclusion*—(1) *In general.* A payment made pursuant to a written plan of a partnership which meets the requirements of paragraph (b) of this section shall be excluded, in computing net earnings from self-employment, only if:

(i) The retired partner to whom the payment is made rendered no service with respect to any trade or business carried on by the partnership (or its successors) during the taxable year of the partnership (or its successors), which ends within or with the taxable year of the retired partner and in which the payment was received by him;

(ii) No obligation (whether certain in amount or contingent on a subsequent event) exists (as of the close of the partnership's taxable year referred to in subdivision (i) of this subparagraph) from the other partners to the retired partner except with respect to retirement payments under the plan or rights such as benefits payable on account of sickness, accident, hospitalization, medical expenses, or death; and

(iii) The retired partner's share (if any) of the capital of the partnership has been paid to him in full before the close of the partnership's taxable year referred to in subdivision (i) of this subparagraph.

By application of the conditions set forth in this subparagraph, either all payments on account of retirement received by a retired partner during the taxable year of the partnership ending within or with his taxable year are excluded or none of the payments are excluded. Subdivision (ii) of this subparagraph has application only to obligations from other partners in their capacity as partners as distinguished from an obligation which arose and exists from a transaction unrelated to the partnership or to a trade or business carried on by the partnership. The effect of the conditions set forth in subdivisions (ii) and (iii) of this subparagraph is that the exclusion may apply with respect to payments received by a retired partner during the taxable year of the partnership ending within or with his taxable year only if at the close of the partnership's taxable year the retired partner had no financial interest in the partnership except for the right to retirement payments.

(2) *Examples.* The application of subparagraph (1) of this paragraph may be illustrated by the following examples. Each example assumes that the partnership plan pursuant to which the payments are made meets the requirements of paragraph (b) of this section.

Example (1). A, who files his income tax returns on a calendar year basis, is a partner in the ABC partnership. The taxable year of the partnership is the period July 1 to June 30, inclusive. A retired from the partnership on January 1, 1973, and receives monthly payments on account of his retirement. As of June 30, 1973, no obligation existed from the other partners to A (except with respect to retirement payments under the plan) and A's share of the capital of the partnership had been paid to him in full. The monthly retirement payments received by A from the partnership in his taxable year ending on December 31, 1973, are not excluded from net earnings from self-employment since A rendered service to the partnership during a portion of the partnership's taxable year (July 1, 1972,

through June 30, 1973) which ends within A's taxable year ending on December 31, 1973.

Example (2). D, a partner in the DEF partnership, retired from the partnership as of the close of December 31, 1972. The taxable year of both D and the partnership is the calendar year. During the partnership's taxable year ending December 31, 1973, D rendered no service with respect to any trade or business carried on by the partnership. On or before December 31, 1973, all obligations (other than with respect to retirement payments under the plan) from the other partners to D have been liquidated, and D's share of the capital of the partnership has been paid to him. Retirement payments received by D pursuant to the partnership's plan in his taxable year ending December 31, 1973, are excluded in determining his net earnings from self-employment (if any) for that taxable year.

Example (3). Assume the same facts as in example (2) except that as of the close of December 31, 1973, D has a right to a fixed percentage of any amounts collected by the partnership after that date which are attributable to services rendered by him prior to his retirement for clients of the partnership. The monthly payments received by D in his taxable year ending December 31, 1973, are not excluded from net earnings from self-employment since as of the close of the partnership's taxable year which ends with D's taxable year, an obligation (other than an obligation with respect to retirement payments) exists from the other partners to D.

[T.D. 7333, 39 FR 44446, Dec. 24, 1974]

§ 1.1402(a)–18 Split-dollar life insurance arrangements.

See §§ 1.61–22 and 1.7872–15 for rules relating to the treatment of split-dollar life insurance arrangements.

[T.D. 9092, 68 FR 54352, Sept. 17, 2003]

§ 1.1402(b)–1 Self-employment income.

(a) *In general.* Except for the exclusions in paragraphs (b) and (c) of this section and the exception in paragraph (d) of this section, the term ''self-employment income'' means the net earnings from self-employment derived by an individual during a taxable year.

(b) *Maximum self-employment income*—(1) *General rule.* Subject to the special rules described in subparagraph (2) of this paragraph, the maximum self-employment income of an individual for a taxable year (whether a period of 12 months or less) is:

(i) For any taxable year beginning in a calendar year after 1974, an amount equal to the contribution and benefit base (as determined under section 230 of the Social Security Act) which is effective for such calendar year; and

(ii) For any taxable year:

Ending before 1955	$3,600
Ending after 1954 and before 1959	4,200
Ending after 1958 and before 1966	4,800
Ending after 1965 and before 1968	6,600
Ending after 1967 and beginning before 1972	7,800
Beginning after 1971 and before 1973	9,000
Beginning after 1972 and before 1974	10,800
Beginning after 1973 and before 1975	13,200

(2) *Special rules.* (i) If an individual is paid wages as defined in subparagraph (3) of this paragraph in a taxable year, the maximum self-employment income for such taxable year is computed as provided in subdivision (ii) or (iii) of this subparagraph.

(ii) If an individual is paid wages as defined in subparagraph (3) (i) or (ii) of this paragraph in a taxable year, the maximum self-employment income of such individual for such taxable year is the excess of the amounts indicated in subparagraph (1) of this paragraph over the amount of the wages, as defined in subparagraph (3) (i) and (ii) of this paragraph, paid to him during the taxable year. For example, if for his taxable year beginning in 1974, an individual has $15,000 of net earnings from self-employment and during such taxable year is paid $1,000 of wages as defined in section 3121(a) (see subparagraph (3)(i) of this paragraph), he has $12,200 ($13,200 − $1,000) of self-employment income for the taxable year.

(iii) For taxable years ending on or after December 31, 1968, wages, as defined in subparagraph (3)(iii) of this paragraph, are taken into account in determining the maximum self-employment income of an individual for purposes of the tax imposed under section 1401(b) (hospital insurance), but not for purposes of the tax imposed under section 1401(a) (old-age survivors, and disability insurance). If an individual is paid wages as defined in subparagraph (3)(iii) of this paragraph in a taxable year, his maximum self-employment income for such taxable year for purposes of the tax imposed under section 1401(a) is computed under subparagraph (1) of this paragraph or subdivision (ii) of this subparagraph

(whichever is applicable), and his maximum self-employment income for such taxable year for purposes of the tax imposed under section 1401(b) is the excess of his section 1401(a) maximum self-employment income over the amount of wages, as defined in subparagraph (3)(iii) of this paragraph, paid to him during the taxable year. For purposes of this subdivision, wages as defined in subparagraph (3)(iii) of this paragraph are deemed paid to an individual in the period with respect to which the payment is made, that is, the period in which the compensation was earned or deemed earned within the meaning of section 3231(e). For an explanation of the term ''compensation'' and for provisions relating to when compensation is earned, see the regulations under section 3231(e) in part 31 of this chapter (Employment Tax Regulations). The application of the rules set forth in this subdivision may be illustrated by the following example:

Example. M, a calendar-year taxpayer, has $15,000 of net earnings from self-employment for 1974 and during the taxable year is paid $1,000 of wages as defined in section 3121(a) (see subparagraph (3)(i) of this paragraph) and $1,600 of compensation subject to tax under section 3201 (see subparagraph (3)(iii) of this paragraph). Of the $1,600 of taxable compensation, $1,200 represents compensation for services rendered in 1974 and the balance ($400) represents compensation which pursuant to the provisions of section 3231(e) is earned or deemed earned in 1973. M's maximum self-employment income for 1974 for purposes of the tax imposed under section 1401(a), computed as provided in subdivision (ii) of this subparagraph, is $12,200 ($13,200 − $1,000), and for purposes of the tax imposed under section 1401(b) is $11,000 ($12,200 − $1,200). However, M may recompute his maximum self-employment income for 1973 for purposes of the tax imposed under section 1401(b) by taking into account the $400 of compensation which is deemed paid in 1973.

(3) *Meaning of term ''wages''*. For the purpose of the computation described in subparagraph (2) of this paragraph, the term ''wages'' includes:

(i) Wages as defined in section 3121(a);

(ii) Such remuneration paid to an employee for services covered by:

(*a*) An agreement entered into pursuant to section 218 of the Social Security Act (42 U.S.C. 418), which section provides for extension of the Federal old-age, survivors and disability insurance system to State and local government employees under voluntary agreements between the States and the Secretary of Health, Education, and Welfare (Federal Security Administrator before April 11, 1953), or

(*b*) An agreement entered into pursuant to the provisions of section 3121(1), relating to coverage of citizens of the United States who are employees of foreign subsidiaries of domestic corporations,

as would be wages under section 3121(a) if such services constituted employment under section 3121(b). For an explanation of the term ''wages'', see the regulations under section 3121(a) in part 31 of this chapter (Employment Tax Regulations); and

(iii) Compensation, as defined in section 3231(e), which is subject to the employee tax imposed by section 3201 or the employee representative tax imposed by section 3211.

(c) *Minimum net earnings from self-employment*. Self-employment income does not include the net earnings from self-employment of an individual when the amount of such earnings for the taxable year is less than $400. Thus, an individual having only $300 of net earnings from self-employment for the taxable year would not have any self-employment income. However, an individual having net earnings from self-employment of $400 or more for the taxable year may, by application of paragraph (b)(2) of this section, have less than $400 of self-employment income for purposes of the tax imposed under section 1401(a) and the tax imposed under section 1401(b) or may have self-employment income of $400 or more for purposes of the tax imposed under section 1401(a) and of less than $400 for purposes of the tax imposed under section 1401(b). This could occur in a case in which the amount of the individual's net earnings from self-employment is $400 or more for a taxable year and the amount of such net earnings from self-employment plus the amount of wages, as defined in paragraph (b)(3) of this section, paid to him during the taxable year exceed the maximum self-employment income, as

set forth in paragraph (b)(1) of this section, for the taxable year. However, the result occurs only if such maximum self-employment income exceeds the amount of such wages. The application of this paragraph may be illustrated by the following example:

Example. For 1974 M, a calendar-year taxpayer, has net earnings from self-employment of $2,000 and wages (as defined in paragraph (b)(3) (i) and (ii) of this section) of $12,500. Since M's net earnings from self-employment plus his wages exceed the maximum self-employment income for 1974 ($13,200), his self-employment income for 1974 is $700 ($13,200 – $12,500). If M also had wages, as defined in paragraph (b)(3)(iii) of this section, of $200, his self-employment income would be $700 for purposes of the tax imposed under section 1401(a) and $500 ($13,200 – $12,700 ($12,500+$200)) for purposes of the tax imposed under section 1401(b).

For provisions relating to when wages as defined in paragraph (b)(3)(iii) of this section are treated as paid, see paragraph (b)(2)(iii) of this section.

(d) *Nonresident aliens.* A nonresident alien individual never has self-employment income. While a nonresident alien individual who derives income from a trade or business carried on within the United States, Puerto Rico, the Virgin Islands, Guam, or American Samoa (whether by agents or employees, or by a partnership of which he is a member) may be subject to the applicable income tax provisions on such income, such nonresident alien individual will not be subject to the tax on self-employment income, since any net earnings which he may have from self-employment do not constitute self-employment income. For the purpose of the tax on self-employment income, an individual who is not a citizen of the United States but who is a resident of the Commonwealth of Puerto Rico, the Virgin Islands, or, for taxable years beginning after 1960, of Guam or American Samoa is not considered to be a nonresident alien individual.

[T.D. 6691, 28 FR 12796, Dec. 3, 1963, as amended by T.D. 7333, 39 FR 44447, Dec. 24, 1974]

§ 1.1402(c)–1 Trade or business.

In order for an individual to have net earnings from self-employment, he must carry on a trade or business, either as an individual or as a member of a partnership. Except for the exclusions discussed in §§ 1.1402(c)–2 to 1.1402(c)–7, inclusive, the term ''trade or business'', for the purpose of the tax on self-employment income, shall have the same meaning as when used in section 162. An individual engaged in one of the excluded activities specified in such sections of the regulations may also be engaged in carrying on activities which constitute a trade or business for purposes of the tax on self-employment income. Whether or not he is also engaged in carrying on a trade or business will be dependent upon all of the facts and circumstances in the particular case. An individual who is a crew leader, as defined in section 3121(o) (see such section and the regulations thereunder in part 31 of this chapter (Employment Tax Regulations)), is considered to be engaged in carrying on a trade or business with respect to services performed by him after 1956 in furnishing individuals to perform agricultural labor for another person or services performed by him after 1956 as a member of the crew.

[T.D. 6978, 33 FR 15937, Oct. 30, 1968]

§ 1.1402(c)–2 Public office.

(a) *In general*—(1) *General rule.* Except as otherwise provided in subparagraph (2) of this paragraph, the performance of the functions of a public office does not constitute a trade or business.

(2) *Fee basis public officials*—(i) *In general.* If an individual receives fees after 1967 for the performance of the functions of a public office of a State or a political subdivision thereof for which he is compensated solely on a fee basis, and if the service performed in such office is eligible for (but is not made the subject of) an agreement between the State and the Secretary of Health, Education, and Welfare pursuant to section 218 of the Social Security Act to extend social security coverage thereto, the service for which such fees are received constitutes a trade or business within the meaning of section 1402(c) and § 1.1402(c)–1. If an individual performs service for a State or a political subdivision thereof in any period in more than one position, each position is treated separately for purposes of the preceding sentence. See also paragraph (f) of § 1.1402(c)–3 relating to

the performance of service by an individual as an employee of a State or a political subdivision thereof in a position compensated solely on a fee basis.

(ii) *Election with respect to fees received in 1968.* (A) Any individual who in 1968 receives fees for service performed by him with respect to the functions of a public office of a State or a political subdivision thereof in any period in which the functions are performed in a position compensated solely on a fee basis may elect, if the performance of the service for which such fees are received constitutes a trade or business pursuant to the provisions of subdivision (i) of this subparagraph, to have such performance of service treated as excluded from the term ''trade or business'' for the purpose of the tax on self-employment income, pursuant to the provisions of section 122(c)(2) of the Social Security Amendments of 1967 (as quoted in §1.1402(c)). Such election shall not be limited to service to which the fees received in 1968 are attributable but must also be applicable to service (if any) in subsequent years which, except for the election, would constitute a trade or business pursuant to the provisions of subdivision (i) of this subparagraph. An election made pursuant to the provisions of this subparagraph is irrevocable.

(B) The election referred to in subdivision (ii)(A) of this subparagraph shall be made by filing a certificate of election of exemption (Form 4415) on or before the due date of the income tax return (see section 6072), including any extension thereof (see section 6081), for the taxable year of the individual making the election which begins in 1968. The certificate of election of exemption shall be filed with an internal revenue office in accordance with the instructions on the certificate.

(b) *Meaning of public office.* The term ''public office'' includes any elective or appointive office of the United States or any possession thereof, of the District of Columbia, of a State or its political subdivisions, or a wholly-owned instrumentality of any one or more of the foregoing. For example, the President, the Vice President, a governor, a mayor, the Secretary of State, a member of Congress, a State representative, a county commissioner, a judge, a justice of the peace, a county or city attorney, a marshal, a sheriff, a constable, a registrar of deeds, or a notary public performs the functions of a public office. (However, the service of a notary public could not be made the subject of a section 218 agreement under the Social Security Act because notaries are not ''employees'' within the meaning of that section. Accordingly, such service does not constitute a trade or business.)

[T.D. 7333, 39 FR 44448, Dec. 24, 1974, as amended by T.D. 7372, 40 FR 30945, July 24, 1975]

§1.1402(c)–3 Employees.

(a) *General rule.* Generally, the performance of service by an individual as an employee, as defined in the Federal Insurance Contributions Act (Chapter 21 of the Internal Revenue Code) does not constitute a trade or business within the meaning of section 1402(c) and §1.1402(c)–1. However, in six cases set forth in paragraphs (b) to (g), inclusive, of this section, the performance of service by an individual is considered to constitute a trade or business within the meaning of section 1402(c) and §1.1402(c)–1. (As to when an individual is an employee, see section 3121 (d) and (o) and section 3506 and the regulations under those sections in part 31 of this chapter (Employment Tax Regulations).)

(b) *Newspaper vendors.* Service performed by an individual who has attained the age of 18 constitutes a trade or business for purposes of the tax on self-employment income within the meaning of section 1402(c) and §1.1402(c)–1 if performed in, and at the time of, the sale of newspapers or magazines to ultimate consumers, under an arrangement under which the newspapers or magazines are to be sold by him at a fixed price, his compensation being based on the retention of the excess of such price over the amount at which the newspapers or magazines are charged to him, whether or not he is guaranteed a minimum amount of compensation for such service, or is entitled to be credited with the unsold newspapers or magazines turned back.

(c) *Sharecroppers.* Service performed by an individual under an arrangement

with the owner or tenant of land pursuant to which:

(1) Such individual undertakes to produce agricultural or horticultural commodities (including livestock, bees, poultry, and fur-bearing animals and wildlife) on such land,

(2) The agricultural or horticultural commodities produced by such individual, or the proceeds therefrom, are to be divided between such individual and such owner or tenant, and

(3) The amount of such individual's share depends on the amount of the agricultural or horticultural commodities produced, constitutes a trade or business within the meaning of section 1402(c) and § 1.1402(c)–1.

(d) *Employees of foreign government, instrumentality wholly owned by foreign government, or international organization.* Service performed in the United States, as defined in section 3121(e)(2) (see such section and the regulations thereunder in part 31 of this chapter (Employment Tax Regulations)), by an individual who is a citizen of the United States constitutes a trade or business within the meaning of section 1402(c) and § 1.1402(c)–1 if such service is excepted from employment, for purposes of the Federal Insurance Contributions Act (chapter 21 of the Code), by:

(1) Section 3121(b)(11), relating to service in the employ of a foreign government (for regulations under section 3121(b)(11), see § 31.3121(b)(11)–1 of this chapter);

(2) Section 3121(b)(12), relating to service in the employ of an instrumentality wholly owned by a foreign government (for regulations under section 3121(b)(12), see § 31.3121(b)(12)–1 of this chapter); or

(3) Section 3121(b)(15), relating to service in the employ of an international organization (for regulations under section 3121(b)(15), see § 31.3121(b)(15)–1 of this chapter).

This paragraph is applicable to service performed in any taxable year ending on or after December 31, 1960, except that it does not apply to service performed before 1961 in Guam or American Samoa.

(e) *Ministers and members of religious orders*—(1) *Taxable years ending before 1968.* Service described in section 1402(c)(4) performed by an individual during taxable years ending before 1968 for which a certificate filed pursuant to section 1402(e) is in effect constitutes a trade or business within the meaning of section 1402(c) and § 1.1402(c)–1. See also § 1.1402(c)–5.

(2) *Taxable years ending after 1967.* Service described in section 1402(c)(4) performed by an individual during taxable years ending after 1967 constitutes a trade or business within the meaning of section 1402(c) and § 1.1402(c)–1 unless an exemption under section 1402(e) (see §§ 1.1402(e)–1A through 1.1402(e)–4A) is effective with respect to such individual for the taxable year during which the service is performed. See also § 1.1402(c)–5.

(f) *State and local government employees compensated on fee basis*—(1) *In general.* (i) Section 1402(c)(2)(E) and this paragraph are applicable only with respect to fees received by an individual after 1967 for service performed by him as an employee of a State or a political subdivision thereof in a position compensated solely on a fee basis. If an individual performs service for a State or a political subdivision thereof in more than one position, each position is treated separately for purposes of determining whether the service performed in such position is performed by an employee and whether compensation for service performed in the position is solely on a fee basis.

(ii) If an individual receives fees after 1967 for service performed by him as an employee of a State or a political subdivision thereof in a position compensated solely on a fee basis, the service for which such fees are received constitutes a trade or business within the meaning of section 1402(c) and § 1.1402(c)–1 except that if service performed in such position is covered under an agreement entered into by the State and the Secretary of Health, Education, and Welfare pursuant to section 218 of the Social Security Act at the time a fee is received, the service to which such fee relates does not constitute a trade or business. See also paragraph (a) of § 1.1402(c)–2, relating, in part, to the performance of the functions of a public office of a State or a political subdivision thereof by an individual.

(2) *Election with respect to fees received in 1968.* (i) Any individual who in 1968 receives fees for service as an employee of a State or a political subdivision thereof in a position compensated solely on a fee basis may elect, if the performance of the service for which such fees are received constitutes a trade or business pursuant to the provisions of subparagraph (1) of this paragraph, to have such performance of service treated as excluded from the term ''trade or business'' for the purpose of the tax on self-employment income, pursuant to the provisions of section 122(c)(2) of the Social Security Amendments of 1967 (as quoted in § 1.1402(c)). Such election shall not be limited to service to which the fees received in 1968 are attributable but must also be applicable to service (if any) in subsequent years which, except for the election, would constitute a trade or business pursuant to the provisions of subparagraph (1) of this paragraph. An election made pursuant to the provisions of this subparagraph is irrevocable.

(ii) The election referred to in subdivision (i) of this subparagraph shall be made by filing a certificate of election of exemption (Form 4415) on or before the due date of the income tax return (see section 6072), including any extension thereof (see section 6081), for the taxable year of the individual making the election which begins in 1968. The certificate of election of exemption shall be filed with an internal revenue office in accordance with the instructions on the certificate.

(g) *Individuals engaged in fishing.* For taxable years ending after December 31, 1954, service performed by an individual on a boat engaged in catching fish or other forms of aquatic animal life (hereinafter ''fish'') constitutes a trade or business within the meaning of section 1402(c) and § 1.1402(c)–1 if the service is excepted from the definition of employment by section 3121(b)(20) and § 31.3121(b)(20)–1(a). However, the preceding sentence does not apply to services performed after December 31, 1954, and before October 4, 1976, on a boat engaged in catching fish if the owner or operator of the boat treated the individual as an employee in the manner described in § 31.3121(b)(20)–1(b).

[T.D. 6691, 28 FR 12796, Dec. 3, 1963, as amended by T.D. 6978, 33 FR 15937, Oct. 30, 1968; T.D. 7333, 39 FR 44448, Dec. 24, 1974; T.D. 7691, 45 FR 24129, Apr. 9, 1980; T.D. 7716, 45 FR 57123, Aug. 27, 1980]

§ 1.1402(c)–4 Individuals under Railroad Retirement System.

The performance of service by an individual as an employee or employee representative as defined in section 3231(b) and (c), respectively (see §§ 31.3231(b)–1 and 31.3231(c)–1 of Part 31 of this chapter (Employment Tax Regulations)), that is, an individual covered under the railroad retirement system, does not constitute a trade or business.

§ 1.1402(c)–5 Ministers and members of religious orders.

(a) *In general*—(1) *Taxable years ending before 1968.* For taxable years ending before 1955, a duly ordained, commissioned, or licensed minister of a church or a member of a religious order is not engaged in carrying on a trade or business with respect to service performed by him in the exercise of his ministry or in the exercise of duties required by such order. However, for taxable years ending after 1954 and before 1968, any individual who is a duly ordained, commissioned, or licensed minister of a church or a member of a religious order (other than a member of a religious order who has taken a vow of poverty as a member of such order) may elect, as provided in § 1.1402(e)(1)–1, to have the Federal old-age, survivors, and disability insurance system established by title II of the Social Security Act extended to service performed by him in his capacity as such a minister or member. If such a minister or a member of a religious order makes an election pursuant to § 1.1402(e)(1)–1 he is, with respect to service performed by him in such capacity, engaged in carrying on a trade or business for each taxable year to which the election is effective. An election by a minister or member of a religious order has no application to service performed by such minister or member which is not in the exercise of his ministry or in the exercise of duties required by such order.

(2) *Taxable years ending after 1967.* For any taxable year ending after 1967, a duly ordained, commissioned, or licensed minister of a church or a member of a religious order (other than a member of a religious order who has taken a vow of poverty as a member of such order) is engaged in carrying on a trade or business with respect to service performed by him in the exercise of his ministry or in the exercise of duties required by such order unless an exemption under section 1402(e) (see §§ 1.1402(e)–1A through 1.1402(e)–4A) is effective with respect to such individual for the taxable year during which the service is performed. An exemption which is effective with respect to a minister or a member of a religious order has no application to service performed by such minister or member which is not in the exercise of his ministry or in the exercise of duties required by such order.

(b) *Service by a minister in the exercise of his ministry.* (1)(i) A certificate of election filed by a duly ordained, commissioned, or licensed minister of a church under the provisions of § 1.1402(e)(1)–1 has application only to service performed by him in the exercise of his ministry.

(ii) An exemption under section 1402(e) (see §§ 1.1402(e)–1A through 1.1402(e)–4A) which is effective with respect to a duly ordained, commissioned, or licensed minister of a church has application only to service performed by him in the exercise of his ministry.

(2) Except as provided in paragraph (c)(3) of this section, service performed by a minister in the exercise of his ministry includes the ministration of sacerdotal functions and the conduct of religious worship, and the control, conduct, and maintenance of religious organizations (including the religious boards, societies, and other integral agencies of such organizations), under the authority of a religious body constituting a church or church denomination. The following rules are applicable in determining whether services performed by a minister are performed in the exercise of his ministry:

(i) Whether service performed by a minister constitutes the conduct of religious worship or the ministration of sacerdotal functions depends on the tenets and practices of the particular religious body constituting his church or church denomination.

(ii) Service performed by a minister in the control, conduct, and maintenance of a religious organization relates to directing, managing, or promoting the activities of such organization. Any religious organization is deemed to be under the authority of a religious body constituting a church or church denomination if it is organized and dedicated to carrying out the tenets and principles of a faith in accordance with either the requirements or sanctions governing the creation of institutions of the faith. The term ''religious organization'' has the same meaning and application as is given to the term for income tax purposes.

(iii) If a minister is performing service in the conduct of religious worship or the ministration of sacerdotal functions, such service is in the exercise of his ministry whether or not it is performed for a religious organization. The application of this rule may be illustrated by the following example:

Example. M, a duly ordained minister, is engaged to perform service as chaplain at N University. M devotes his entire time to performing his duties as chaplain which include the conduct of religious worship, offering spiritual counsel to the university students, and teaching a class in religion. M is performing service in the exercise of his ministry.

(iv) If a minister is performing service for an organization which is operated as an integral agency of a religious organization under the authority of a religious body constituting a church or church denomination, all service performed by the minister in the conduct of religious worship, in the ministration of sacerdotal functions, or in the control, conduct, and maintenance of such organization (see subparagraph (2)(ii) of this paragraph) is in the exercise of his ministry. The application of this rule may be illustrated by the following example:

Example. M, a duly ordained minister, is engaged by the N Religious Board to serve as director of one of its departments. He performs no other service. The N Religious Board is an integral agency of O, a religious organization operating under the authority

of a religious body constituting a church denomination. M is performing service in the exercise of his ministry.

(v) If a minister, pursuant to an assignment or designation by a religious body constituting his church, performs service for an organization which is neither a religious organization nor operated as an integral agency of a religious organization, all service performed by him, even though such service may not involve the conduct of religious worship or the ministration of sacerdotal functions, is in the exercise of his ministry. The application of this rule may be illustrated by the following example:

Example. M, a duly ordained minister, is assigned by X, the religious body constituting his church, to perform advisory service to Y Company in connection with the publication of a book dealing with the history of M's church denomination. Y is neither a religious organization nor operated as an integral agency of a religious organization. M performs no other service for X or Y. M is performing service in the exercise of his ministry.

(c) *Service by a minister not in the exercise of his ministry.* (1)(i) A certificate filed by a duly ordained, commissioned, or licensed minister of a church under the provisions of § 1.1402(e)(1)–1 has no application to service performed by him which is not in the exercise of his ministry.

(ii) An exemption under section 1402(e) (see §§ 1.1402(e)–1A through 1.1402(e)–4A) which is effective with respect to a duly ordained, commissioned, or licensed minister of a church has no application to service performed by him which is not in the exercise of his ministry.

(2) If a minister is performing service for an organization which is neither a religious organization nor operated as an integral agency of a religious organization and the service is not performed pursuant to an assignment or designation by his ecclesiastical superiors, then only the service performed by him in the conduct of religious worship or the ministration of sacerdotal functions is in the exercise of his ministry. See, however, subparagraph (3) of this paragraph. The application of the rule in this subparagraph may be illustrated by the following example:

Example. M, a duly ordained minister, is engaged by N University to teach history and mathematics. He performs no other service for N although from time to time he performs marriages and conducts funerals for relatives and friends. N University is neither a religious organization nor operated as an integral agency of a religious organization. M is not performing the service for N pursuant to an assignment or designation by his ecclesiastical superiors. The service performed by M for N University is not in the exercise of his ministry. However, service performed by M in performing marriages and conducting funerals is in the exercise of his ministry.

(3) Service performed by a duly ordained, commissioned, or licensed minister of a church as an employee of the United States, or a State, Territory, or possession of the United States, or the District of Columbia, or a foreign government, or a political subdivision of any of the foregoing, is not considered to be in the exercise of his ministry for purposes of the tax on self-employment income, even though such service may involve the ministration of sacerdotal functions or the conduct of religious worship. Thus, for example, service performed by an individual as a chaplain in the Armed Forces of the United States is considered to be performed by a commissioned officer in his capacity as such, and not by a minister in the exercise of his ministry. Similarly, service performed by an employee of a State as a chaplain in a State prison is considered to be performed by a civil servant of the State and not by a minister in the exercise of his ministry.

(d) *Service in the exercise of duties required by a religious order*—(1) *Certificate of election.* A certificate of election filed by a member of a religious order (other than a member of a religious order who has taken a vow of poverty as a member of such order) under the provisions of § 1.1402(e)(1)–1 has application to all duties required of him by such order.

(2) *Exemption.* An exemption under section 1402(e) (see §§ 1.1402(e)–1A through 1.1402(e)–4A) which is effective with respect to a member of a religious order (other than a member of a religious order who has taken a vow of poverty as a member of such order) has application only to the duties required of him by such order.

(3) *Service*. For purposes of subparagraphs (1) and (2) of this paragraph, the nature or extent of the duties required of the member by the order is immaterial so long as it is a service which he is directed or required to perform by his ecclesiastical superiors.

[T.D. 6691, 28 FR 12796, Dec. 3, 1963, as amended by T.D. 6978, 33 FR 15937, Oct. 30, 1968]

§ 1.1402(c)–6 Members of certain professions.

(a) *Periods of exclusion*—(1) *Taxable years ending before 1955*. For taxable years ending before 1955, an individual is not engaged in carrying on a trade or business with respect to the performance of service in the exercise of his profession as a physician, lawyer, dentist, osteopath, veterinarian, chiropractor, naturopath, optometrist, Christian Science practitioner, architect, certified public accountant, accountant registered or licensed as an accountant under State or municipal law, full-time practicing public accountant, funeral director, or professional engineer.

(2) *Taxable years ending in 1955*. Except as provided in paragraph (b) of this section, for a taxable year ending in 1955 an individual is not engaged in carrying on a trade or business with respect to the performance of service in the exercise of his profession as a physician, lawyer, dentist, osteopath, veterinarian, chiropractor, naturopath, optometrist, or Christian Science practitioner.

(3) *Taxable years ending after 1955*—(i) *Doctors of medicine*. For taxable years ending after 1955 and before December 31, 1965, and individual is not engaged in carrying on a trade or business with respect to the performance of service in the exercise of his profession as a doctor of medicine. For taxable years ending after December 30, 1965, an individual is engaged in carrying on a trade or business with respect to the performance of service in the exercise of his profession as a doctor of medicine.

(ii) *Christian Science practitioners*. Except as provided in paragraph (b)(1) of this section, for taxable years ending after 1955 and before 1968, an individual is not engaged in carrying on a trade or business with respect to the performance of service in the exercise of his profession as a Christian Science practitioner. For provisions relating to the performance of service in taxable years ending after 1967 by an individual in the exercise of his profession as a Christian Science practitioner, see paragraph (b)(2) of this section.

(b) *Christian Science practitioner*—(1) *Certain taxable years ending before 1968; election*. For taxable years ending after 1954 and before 1968, a Christian Science practitioner may elect, as provided in § 1.1402(e)(1)–1, to have the Federal old-age, survivors, and disability insurance system established by title II of the Social Security Act extended to service performed by him in the exercise of his profession as a Christian Science practitioner. If an election is made pursuant to § 1.1402(e)(1)–1, the Christian Science practitioner is, with respect to the performance of service in the exercise of such profession, engaged in carrying on a trade or business for each taxable year for which the election is effective. An election by a Christian Science practitioner has no application to service performed by him which is not in the exercise of his profession as a Christian Science practitioner.

(2) *Taxable years ending after 1967; exemption*. For a taxable year ending after 1967, a Christian Science practitioner is, with respect to the performance of service in the exercise of his profession as a Christian Science practitioner, engaged in carrying on a trade or business unless an exemption under section 1402(e) (see §§ 1.1402(e)–1A through 1.1402(e)–4A) is effective with respect to him for the taxable year during which the service is performed. An exemption which is effective with respect to a Christian Science practitioner has no application to service performed by him which is not in the exercise of his profession as a Christian Science practitioner.

(c) *Meaning of terms*. The designations in this section are to be given their commonly accepted meanings. For taxable years ending after 1955, an individual who is a doctor of osteopathy, and who is not a doctor of medicine within the commonly accepted meaning of that term, is deemed, for purposes of this section, not to be engaged

in carrying on a trade or business in the exercise of the profession of doctor of medicine.

(d) *Legal requirements*. The exclusions specified in paragraph (a) of this section apply only if the individuals meet the legal requirements, if any, for practicing their professions in the place where they perform the service.

(e) *Partnerships*. In the case of a partnership engaged in the practice of any of the designated excluded professions, the partnership shall not be considered as carrying on a trade or business for the purpose of the tax on self-employment income, and none of the distributive shares of the income or loss, described in section 702(a)(9), of such partnership shall be included in computing net earnings from self-employment of any member of the partnership. On the other hand, where a partnership is engaged in a trade or business not within any of the designated excluded professions, each partner must include his distributive share of the income or loss, described in section 702(a)(9), of such partnership in computing his net earnings from self-employment, irrespective of whether such partner is engaged in the practice of one or more of such professions and contributes his professional services to the partnership.

[T.D. 6691, 28 FR 12796, Dec. 3, 1963, as amended by T.D. 6978, 33 FR 15938, Oct. 30, 1968]

§ 1.1402(c)–7 Members of religious groups opposed to insurance.

The performance of service by an individual:

(a) Who is a member of a recognized religious sect or division thereof, and

(b) Who is an adherent of established tenets or teachings of such sect or division by reason of which he is conscientiously opposed to acceptance of the benefits of any private or public insurance which makes payments in the event of death, disability, old age, or retirement or makes payments toward the cost of, or provides services for, medical care (including the benefits of any insurance system established by the Social Security Act),

during any taxable year for which he is granted a tax exemption, pursuant to section 1402(h), does not constitute a trade or business within the meaning of section 1402(c) and § 1.1402(c)–1. See also §§ 1.1402(h) and 1.1402(h)–1.

[T.D. 6993, 34 FR 830, Jan. 18, 1969]

§ 1.1402(d)–1 Employee and wages.

For the purpose of the tax on self-employment income, the term ''employee'' and the term ''wages'' shall have the same meaning as when used in the Federal Insurance Contributions Act. For an explanation of these terms, see Subpart B of Part 31 of this chapter (Employment Tax Regulations).

§ 1.1402(e)–1A Application of regulations under section 1402(e).

The regulations in §§ 1.1402(e)–2A through 1.1402(e)–4A relate to section 1402(e) as amended by section 115(b)(2) of the Social Security Amendments of 1967 (81 Stat. 839) and apply to taxable years ending after 1967. Section 1.1402(e)–5A reflects changes made by section 1704(a) of the Tax Reform Act of 1986 (100 Stat. 2085, 2779) and applies to applications for exemption under section 1402(e) filed after December 31, 1986. For regulations under section 1402(e) (as in effect prior to amendment by the Social Security Amendments of 1967) applicable to taxable years ending before 1968, see §§ 1.1402(e)(1)–1 through 1.1402(e)(6)–1.

[T.D. 8221, 53 FR 33461, Aug. 31, 1988]

§ 1.1402(e)–2A Ministers, members of religious orders and Christian Science practitioners; application for exemption from self-employment tax.

(a) *In general*. (1) Subject to the limitations set forth in subparagraphs (2) and (3) of this paragraph, any individual who is (i) a duly ordained, commissioned, or licensed minister of a church or a member of a religious order (other than a member of a religious order who has taken a vow of poverty as a member of such order) or (ii) a Christian Science practitioner may request an exemption from the tax on self-employment income (see section 1401 and § 1.1401–1) with respect to services performed by him in his capacity as a minister or member, or as a Christian Science practitioner, as the case may be. Such a request shall be made by filing an application for exemption on Form 4361 in the manner provided in

paragraph (b) of this section and within the time specified in §1.1402(e)–3A. For provisions relating to the taxable year or years for which an exemption from the tax on self-employment income with respect to service performed by a minister or member or a Christian Science practitioner in his capacity as such is effective, see §1.1402(e)–4A. For additional provisions applicable to services performed by individuals referred to in this subparagraph, see paragraph (e) of §1.1402(c)–3 and §1.1402(c)–5 relating to ministers and members of religious orders, and paragraphs (a)(3)(ii) and (b) of §1.1402(c)–6 relating to Christian Science practitioners.

(2) The application for exemption shall contain, or there shall be filed with such application, a statement to the effect that the individual making application for exemption is conscientiously opposed to, or because of religious principles is opposed to, the acceptance (with respect to services performed by him in his capacity as a minister, member, or Christian Science practitioner) of any public insurance which makes payments in the event of death, disability, old age, or retirement or makes payments toward the cost of, or provides services for, medical care (including the benefits of any insurance system established by the Social Security Act). Thus, ministers, members of religious orders, and Christian Science practitioners requesting exemption from social security coverage must meet either of two alternative tests: (1) A religious principles test which refers to the institutional principles and discipline of the particular religious denomination to which he belongs, or (2) a conscientious opposition test which refers to the opposition because of religious considerations of individual ministers, members of religious orders, and Christian Science practitioners (rather than opposition based upon the general conscience of any such individual or individuals). The term ''public insurance'', as used in section 1402(e) and this paragraph, refers to governmental, as distinguished from private, insurance and does not include insurance carried with a commercial insurance carrier. To be eligible to file an application for exemption on Form 4361, a minister, member, or Christian Science practitioners need not be opposed to the acceptance of all public insurance making payments of this specified type; he must, however, be opposed on religious grounds to the acceptance of any such payment which, in whole or in part, is based on, or measured by earnings from, services performed by in his capacity as a minister or member (see §1.1402(c)–5) or in his capacity as a Christian Science practitioner (see paragraph (b)(2) of §1.1402(c)–6). For example, a minister performing service in the exercise of his ministry may be eligible to file an application for exemption on Form 4361 even though he is not opposed to the acceptance of benefits under the Social Security Act with respect to service performed by him which is not in the exercise of his ministry.

(3) An exemption from the tax imposed on self-employment income with respect to service performed by a minister, member, or Christian Science practitioner in his capacity as such may not be granted to a minister, member, or practitioner who (in accordance with the provisions of section 1402(e) as in effect prior to amendment by section 115(b)(2) of the Social Security Amendments of 1967 (81 Stat. 839)) filed a valid waiver certificate on Form 2031 electing to have the Federal old-age, survivors, and disability insurance system establish by title II of the Social Security Act extended to service performed by him in the exercise of his ministry or in the exercise of duties required by the order of which he is a member, or in the exercise of his profession as a Christian Science practitioner. For provisions relating to waiver certificates on Form 2031, see §§1.1402(e)(1)–1 through 1.1402(e)(6)–1.

(b) *Application for exemption.* An application for exemption on Form 4361 shall be filed in triplicate with the internal revenue officer or the internal revenue office, as the case may be, designated in the instructions relating to the application for exemption. The application for exemption must be filed within the time prescribed in §1.1402(e)–3A. If the last original Federal income tax return of an individual to whom paragraph (a) of this section

applies which was filed before the expiration of such time limitation for filing an application for exemption shows no liability for tax on self-employment income, such return will be treated as an application for exemption, provided that before February 28, 1975 such individual also files a properly executed Form 4361.

(c) *Approval of application for exemption*. The filing of an application for exemption on Form 4361 by a minister, a member of a religious order, or a Christian Science practitioner does not constitute an exemption from the tax on self-employment income with respect to services performed by him in his capacity as a minister, member, or practitioner. The exemption is granted only if the application is approved by an appropriate internal revenue officer. See § 1.1402(e)–4A relating to the period for which an exemption is effective.

[T.D. 7333, 39 FR 44448, Dec. 24, 1974; 39 FR 45216, Dec. 31, 1974]

§ 1.1402(e)–3A Time limitation for filing application for exemption.

(a) *General rule*. (1) Any individual referred to in paragraph (a) of § 1.1402(e)–2A who desires an exemption from the tax on self-employment income with respect to service performed by him in his capacity as a minister or member of a religious order or as a Christian Science practitioner must file the application for exemption (Form 4361) prescribed by § 1.1402(e)–2A on or before whichever of the following dates is later:

(i) The due date of the income tax return (see section 6072), including any extension thereof (see section 6081), for his second taxable year ending after 1967, or

(ii) The due date of the income tax return, including any extension thereof, for his second taxable year beginning after 1953 for which he has net earnings from self-employment of $400 or more, any part of which:

(*a*) In the case of a duly ordained, commissioned, or licensed minister of a church, consists of remuneration for service performed in the exercise of his ministry,

(*b*) In the case of a member of a religious order who has not taken a vow of poverty as a member of such order, consists of remuneration for service performed in the exercise of duties required by such order, or

(*c*) In the case of a Christian Science practitioner, consists of remuneration for service performed in the exercise of his profession as a Christian Science practitioner.

See paragraph (c) of this section for provisions relating to the computation of net earnings from self-employment.

(2) If a minister, a member of a religious order, or a Christian Science practitioner derives gross income in a taxable year both from service performed in such capacity and from the conduct of another trade or business, and the deductions allowed by Chapter 1 of the Internal Revenue Code which are attributable to the gross income derived from service performed in such capacity equal or exceed the gross income derived from service performed in such capacity, no part of the net earnings from self-employment (computed as prescribed in paragraph (c) of this section) for the taxable year shall be considered as derived from service performed in such capacity.

(3) The application of the rules set forth in subparagraphs (1) and (2) of this paragraph may be illustrated by the following examples:

Example (1). M, who makes his income tax returns on a calendar year basis, was ordained as a minister in January 1960. During each of two or more taxable years ending before 1968 M has net earnings from self-employment in excess of $400 some part of which is from service performed in the exercise of his ministry. M has not filed an effective waiver certificate on Form 2031 (see paragraph (a)(3) of § 1.1402(e)–2A). If M desires an exemption from the tax on self-employment income with respect to service performed in the exercise of his ministry, he must file an application for exemption on or before the due date of his income tax return for 1969 (his second taxable year ending after 1967), or any extension thereof.

Example (2). M, who makes his income tax returns on a calendar year basis, was ordained as a minister in January 1966. M has net earnings of $350 for the taxable year 1966 and has net earnings in excess of $400 for each of his taxable years 1967 and 1968 (some part or all of which is derived from service performed in the exercise of his ministry). M has not filed an effective waiver certificate on Form 2031 (see paragraph (a)(3) of § 1.1402(e)–2A). If M desires an exemption

from the tax on self-employment income with respect to service performed in the exercise of his ministry, he must file an application for exemption on or before the due date of his income tax return for 1969 (his second taxable year ending after 1967), or any extension thereof.

Example (3). Assume the same facts as in example (2) except that M has net earnings in excess of $400 for each of his taxable years 1967 and 1969 (but less than $400 in 1968). The application for exemption must be filed on or before the due date of his income tax return for 1969, or any extension thereof.

Example (4). M was ordained as a minister in May 1973. During each of the taxable years 1973 and 1975, M, who makes his income tax returns on a calendar year basis, derives net earnings in excess of $400 from his activities as a minister. M has net earnings of $350 for the taxable year 1974, $200 of which is derived from service performed by him in the exercise of his ministry. If M desires an exemption from the tax on self-employment income with respect to service performed in the exercise of his ministry, he must file an application for exemption on or before the due date of his income tax return for 1975, or any extension thereof.

Example (5). M, who was ordained a minister in January 1973, is employed as a toolmaker by the XYZ Corporation for the taxable years 1973 and 1974 and also engages in activities as a minister on weekends. M makes his income tax returns on the basis of a calendar year. During each of the taxable years 1973 and 1974 M receives wages of $14,000 from the XYZ Corporation and derives net earnings of $400 from his activities as a minister. If M desires an exemption from the tax on self-employment income with respect to service performed in the exercise of his ministry, he must file an application for exemption on or before the due date of his income tax return for 1974, or any extension thereof. It should be noted that although by reason of section 1402(b)(1) (G) and (H) no part of the $400 represents ''self-employment income'', nevertheless the entire $400 constitutes ''net earnings from self-employment'' for purposes of fulfilling the requirements of section 1402(e)(2).

Example (6). M, who files his income tax returns on a calendar year basis, was ordained as a minister in March 1973. During 1973 he receives $410 for service performed in the exercise of his ministry. In addition to his ministerial services, M is engaged during the year 1973 in a mercantile venture from which he derives net earnings from self-employment in the amount of $4,000. The expenses incurred by him in connection with his ministerial services during 1973 and which are allowable deductions under Chapter 1 of the Internal Revenue Code amount to $410. During 1974 and 1975, M has net earnings from self-employment in amounts of $4,600 and $4,800, respectively, and some part of each of these amounts is from the exercise of his ministry. The deductions allowed in each of the years 1974 and 1975 by Chapter 1 which are attributable to the gross income derived by M from the exercise of his ministry in each of such years, respectively, do not equal or exceed such gross income in such year. If M desires an exemption from the tax on self-employment income with respect to service performed in the exercise of his ministry, he must file an application for exemption on or before the due date of his income tax return for 1975, or an extension thereof.

(b) *Effect of death.* The right of an individual to file an application for exemption shall cease upon his death. Thus, the surviving spouse, administrator, or executor of a decedent shall not be permitted to file an application for exemption for such decedent.

(c) *Computation of net earnings*—(1) *Taxable years ending before 1968.* For purposes of this section net earnings from self-employment for taxable years ending before 1968 shall be determined without regard to the fact that, without an election under section 1402(e) (as in effect prior to amendment by section 115(b)(2) of the Social Security Amendments of 1967, see § 1.1402(e)–1A), the performance of services by a duly ordained, commissioned, or licensed minister of a church in the exercise of his ministry, or by a member of a religious order in the exercise of duties required by such order, or the performance of service by an individual in the exercise of his profession as a Christian Science practitioner, does not constitute a trade or business for purposes of the tax on self-employment income.

(2) *Taxable years ending after 1967.* For purposes of this section and § 1.1402(e)–4A net earnings from self-employment for taxable years ending after 1967 shall be determined without regard to section 1402(c) (4) and (5). See § 1.1402(c)–3(e)(2) and § 1.1402(c)–5 relating to ministers and members of religious orders, and paragraphs (a)(3)(ii) and (b) of § 1.1402(c)–6 relating to Christian Science practitioners.

[T.D. 7333, 39 FR 44449, Dec. 24, 1974]

§ 1.1402(e)–4A Period for which exemption is effective.

(a) *In general.* If an application for exemption on Form 4361:

(1) Is filed by a minister, a member of a religious order, or a Christian Science practitioner eligible to file such an application (see particularly paragraph (a) (2) and (3) of § 1.1402(e)–2A), and

(2) Is approved (see paragraph (c) of § 1.1402(e)–2A),

the exemption from the tax on self-employment income shall be effective for the first taxable year ending after 1967 for which such minister, member, or practitioner has net earnings from self-employment of $400 or more any part of which was derived from the performance of service in his capacity as a minister, member, or practitioner, and for all succeeding taxable years. See, however, paragraphs (b)(1)(ii) and (d)(2) of § 1.1402(c)–5 relating to ministers and members of religious orders and paragraph (b)(2) of § 1.1402(c)–6 relating to Christian Science practitioners.

(b) *Exemption irrevocable.* An exemption granted to a minister, a member of a religious order, or a Christian Science practitioner pursuant to the provisions of section 1402(e) is irrevocable.

[T.D. 7333, 39 FR 44450, Dec. 24, 1974]

§ 1.1402(e)–5A Applications for exemption from self-employment taxes filed after December 31, 1986, by ministers, certain members of religious orders, and Christian Science practitioners.

(a) *In general.* (1) Except as provided in paragraph (a)(2) of this section, this section applies to any individual who is a duly ordained, commissioned, or licensed minister of a church, member of a religious order (other than a member of a religious order who has taken a vow of poverty as a member of such order), or a Christian Science practitioner who files an application after December 31, 1986, for exemption from the tax on self-employment income (see section 1401 and 1.1401–1) with respect to services performed by him or her in his or her capacity as a minister, member, or practitioner pursuant to §§ 1.1402(e)–2A through 1.1402(e)–4A. This section does not apply to applications for exemption under section 1402(e) that are filed before January 1, 1987.

(2) *Application of this section to Christian Science practitioners.* Paragraph (b) of this section does not apply to Christian Science practitioners. Thus, Christian Science practitioners filing applications for exemption from self-employment taxes under section 1402(e) should follow the procedures set forth in §§ 1.1402(e)–2A through 1.1402(e)–4A, and are not required to include the statement described in paragraph (b)(1)(ii) of this section. However, see paragraph (c) of this section for verification procedures with respect to applications for exemption from self-employment taxes filed after December 31, 1986, by Christian Science practitioners.

(b) *Church or order must be informed*—(1) *In general.* Any individual, other than a Christian Science practitioner, who files an application for exemption from the tax on self-employment income under section 1402(e) after December 31, 1986:

(i) Shall file such application in accordance with the procedures set forth in §§ 1.1402(e)–2A through 1.1402(e)–4A, and

(ii) Shall include with such application a statement to the effect that the individual making application for exemption has informed the ordaining, commissioning, or licensing body of the church or order that he or she is opposed to the acceptance (for services performed as a minister or member of a religious order not under a vow of poverty) of any public insurance that makes payments in the event of death, disability, old age, or retirement, or that makes payments toward the cost of, or provides services for, medical care (including the benefits of any insurance system established by the Social Security Act).

(2) *Statement to be filed with form.* If the form provided by the Service for applying for exemption under 1402(e) does not contain the statement set forth in paragraph (b)(1)(ii) of this section, any individual required to include this statement with his or her application under this paragraph (b) shall file such statement with the individual's application at the time and place prescribed for filing such application under §§ 1.1402(e)–2A and 1.1402(e)–3A. The statement shall contain the information set forth in paragraph (b)(1)(ii) of this section and shall be signed by

such individual under penalties of perjury.

(c) *Verification of application*—(1) *In general*. The Service will approve an application for an exemption filed by an individual to whom this section applies only after verifying that the individual applying for the exemption is aware of the grounds on which the individual may receive an exemption under section 1402(e) (See §1.1402(e)–2A) and that the individual seeks exemption on such grounds in accordance with the procedures set forth in paragraph (c)(2) of this section.

(2) *Verification procedure*. Upon receipt of an application for exemption from self-employment taxes under section 1402(e) and this section, the Service will mail to the applicant a statement that describes the grounds on which an individual may receive an exemption under section 1402(e). The individual filing the application shall certify that he or she has read the statement and that he or she seeks exemption from self-employment taxes on the grounds listed in the statement. The certification shall be made by signing a copy of the statement under penalties of perjury and mailing the signed copy to the Service Center from which the statement was issued not later than 90 days after the date on which the statement was mailed to the individual. If the signed copy of the statement is not mailed to the Service Center within 90 days of the date on which the statement was mailed to the individual, that individual's exemption will not be effective until the date that the signed copy of the statement is received at the Service Center.

[T.D. 8136, 52 FR 12162, Apr. 15, 1987, redesignated and amended at T.D. 8221, 53 FR 33461, Aug. 31, 1988]

§ 1.1402(e)(1)–1 Election by ministers, members of religious orders, and Christian Science practitioners for self-employment coverage.

(a) *In general*. Any individual who is (1) a duly ordained, commissioned, or licensed minister of a church or a member of a religious order (other than a member of a religious order who has taken a vow of poverty as a member of such order) or (2) a Christian Science practitioner may elect to have the Federal old-age, survivors, and disability insurance system established by title II of the Social Security Act extended to service performed by him in the exercise of his ministry or in the exercise of duties required by such order, or in the exercise of his profession as a Christian Science practitioner, as the case may be. Such an election shall be made by filing a certificate on Form 2031 in the manner provided in paragraph (b) of this section and within the time specified in §1.1402(e)(2)–1. If a minister or member to whom this section has application, or a Christian Science practitioner, makes an election by filing Form 2031 such individual shall, for each taxable year for which the election is effective (see §1.1402(e)(3)–1), be considered as carrying on a trade or business with respect to the performance of service in his capacity as a minister or member, or as a Christian Science practitioner, as the case may be.

(b) *Waiver certificate*. The certificate on Form 2031 shall be filed in triplicate with the district director of internal revenue for the internal revenue district in which is located the legal residence or principal place of business of the individual who executes the certificate. If such individual has no legal residence or principal place of business in any internal revenue district, the certificate shall be filed with the Director of International Operations, Internal Revenue Service, Washington, DC 20225, or at such other address as is designated in the instructions relating to the certificate. The certificate must be filed within the time prescribed in §1.1402(e)(2)–1. If an individual to whom paragraph (a) of this section has application submits to a district director of internal revenue a dated and signed statement indicating that he desires to have the Federal old-age, survivors, and disability insurance system established by title II of the Social Security Act extended to his services, such statement will be treated as a waiver certificate, if filed within the time specified in §1.1402(e)(2)–1, provided that without unnecessary delay such statement is supplemented by a properly executed Form 2031. An application for a social security account number filed on Form SS–5 or the filing of

an income tax return showing an amount representing self-employment income or self-employment tax shall not be construed to constitute an election referred to in § 1.1402(e)(1)–1.

§ 1.1402(e)(2)–1 Time limitation for filing waiver certificate.

(a) *General rule.* (1) Any individual referred to in § 1.1402(e)(1)–1 who desires to have the Federal old-age, survivors, and disability insurance system established by title II of the Social Security Act extended to his services must file the waiver certificate (Form 2031) prescribed by § 1.1402(e)(1)–1 on or before whichever of the following dates is later:

(i) The due date of the income tax return (see section 6072), including any extension thereof (see section 6081), for his second taxable year ending after 1963; or

(ii) The due date of the income tax return, including any extension thereof, for his second taxable year ending after 1954 for which he has net earnings from self-employment (computed as prescribed in paragraph (c) of this section) of $400 or more, any part of which:

(*a*) In the case of a duly ordained, commissioned, or licensed minister of a church, consists of remuneration for service performed in the exercise of his ministry,

(*b*) In the case of a member of a religious order who has not taken a vow of poverty as a member of such order, consists of remuneration for service performed in the exercise of duties required by such order, or

(*c*) In the case of a Christian Science practitioner, consists of remuneration for service performed in the exercise of his profession as a Christian Science practitioner.

(2) If a minister, a member of a religious order, or a Christian Science practitioner derives gross income in a taxable year both from service performed in such capacity and from the conduct of another trade or business, and the deductions allowed by chapter 1 of the Internal Revenue Code which are attributable to the gross income derived from service performed in such capacity equal or exceed the gross income derived from service performed in such capacity, no part of the net earnings from self-employment (computed as prescribed in paragraph (c) of this section) for the taxable year shall be considered as derived from service performed in such capacity.

(3) The application of the rules set forth in subparagraphs (1) and (2) of this paragraph may be illustrated by the following examples:

Example (1). M was ordained as a minister in May 1963. During each of the taxable years 1963 and 1966, M, who makes his income tax returns on a calendar year basis, derives net earnings in excess of $400 from his activities as a minister. M has net earnings of $350 for each of the taxable years 1964 and 1965, $200 of which is derived from service performed by him as a minister. If M wishes to have the Federal old-age, survivors, and disability insurance system established by title II of the Social Security Act extended to his service as a minister, he must file the waiver certificate on or before the due date of his income tax return for 1966, or any extension thereof.

Example (2). M, who was ordained a minister in January 1965, is employed as a toolmaker by the XYZ Corporation for the taxable years 1965 and 1966 and also engages in activities as a minister on weekends. M makes his income tax return on the basis of a calendar year. During each of the taxable years 1965 and 1966, M receives wages of $4,800 from the XYZ Corporation and derives $400 (all of which constitutes net earnings from self-employment computed as prescribed in paragraph (c) of this section) from his activities as a minister. In such case if M wishes to have the Federal old-age, survivors, and disability insurance system established by title II of the Social Security Act extended to his services as a minister, he must file the waiver certificate on or before the due date of his income tax return for 1966, or any extension thereof. A waiver certificate filed after such date will be invalid. It should be noted that although by reason of section 1402(b)(1)(C) no part of the $400 for the taxable year 1965 represents ''self-employment income'', nevertheless the entire $400 constitutes ''net earnings from self-employment'' for purposes of fulfilling the requirements of section 1402(e)(2).

Example (3). M, who files his income tax returns on a calendar year basis, was ordained as a minister in June 1964. During 1964 he receives $410 for services performed in the exercise of his ministry. In addition to his ministerial services, M is engaged during the year 1964 in a mercantile venture from which he derives net earnings from self-employment in the amount of $1,000. The expenses

incurred by him in connection with his ministerial services during 1964 and which are allowable deductions under Chapter 1 of the Internal Revenue Code amount to $410. During 1965 and 1966, M has net earnings from self-employment in amounts of $1,200 and $1,500, respectively, and some part of each of these amounts is from the exercise of his ministry. The deductions allowed in each of the years 1965 and 1966 by Chapter 1 which are attributable to the gross income derived by M from the exercise of his ministry in each of such years, respectively, do not equal or exceed such gross income in such year. If M wishes to have the Federal old-age, survivors, and disability insurance system established by title II of the Social Security Act extended to his service as a minister, he must file a waiver certificate on or before the due date of his income tax return (including any extension thereof) for 1966.

Example (4). M, a licensed minister who makes his income tax returns on the basis of a calendar year, derived net earnings of $400 or more from the exercise of his ministry for two or more of the taxable years 1955 to 1965, inclusive. In such case, if M wishes to have the Federal old-age, survivors, and disability insurance system established by title II of the Social Security Act extended to his services as a minister, he must file the waiver certificate on or before the due date (April 15, 1966) prescribed for filing his income tax return for 1965, or any extension thereof. A waiver certificate filed after such date will be invalid.

(b) *Effect of death.* Except as provided in §§1.1402(e)(5)–1, 1.1402(e) (5)–2, and 1.1402(e)(6)–1, the right of an individual to file a waiver certificate shall cease from his death. Thus, except as provided in such sections, the surviving spouse, administrator, or executor of a decedent shall not be permitted to file a waiver certificate for such decedent.

(c) *Computation of net earnings without regard to election.* For the purpose of this section net earnings from self-employment shall be determined without regard to the fact that, without an election under section 1402(e), the performance of services by a duly ordained, commissioned, or licensed minister of a church in the exercise of his ministry, or by a member of a religious order in the exercise of duties required by such order, or the performance of service by an individual in the exercise of his profession as a Christian Science practitioner, does not constitute a trade or business for purposes of the tax on self-employment income.

[T.D. 6691, 28 FR 12796, Dec. 3, 1963, as amended by T.D. 6978, 33 FR 15938, Oct. 30, 1968]

§ 1.1402(e)(3)–1 Effective date of waiver certificate.

(a) *Filed before August 31, 1957*—(1) *In general.* A certificate on Form 2031 filed by an individual before August 31, 1957, in accordance with the provisions of section 1402(e) in effect at the time the certificate is filed, shall be effective for the first taxable year with respect to which it is filed, and all subsequent taxable years. In order for a certificate filed by an individual before August 31, 1957, to be effective under section 1402(e), the certificate must be made effective for either the first or second taxable year ending after 1954 in which the individual has net earnings from self-employment of $400 or more (determined as provided in paragraph (c) of §1.1402(e)(2)–1) some part of which is derived from service of the character with respect to which an election may be made. However, a certificate on Form 2031, filed before August 31, 1957, even though filed within the time specified in paragraph (a)(1)(ii) of §1.1402(e)(2)–1, may not be effective, except as provided in subparagraph (2) of this paragraph, for any taxable year with respect to which the due date for filing the individual's income tax return (including any extension thereof) has expired at the time such certificate is filed. Further, a certificate on Form 2031 may not be effective for any taxable year ending before 1955. In order for a certificate filed before August 31, 1957, except for the filing of a supplemental certificate, to be effective for the first or second taxable year ending after 1954 in which the individual has net earnings from self-employment (determined as provided in paragraph (c) of §1.1402(e)(2)–1) some part of which is derived from service of the character with respect to which an election may be made, the certificate on Form 2031 must be filed on or before the due date for filing the income tax return of the individual for such first or second taxable year, respectively, or any extension thereof.

(2) *Supplemental certificates*—(i) *Filed before due date of 1958 return.* If under

subparagraph (1) of this paragraph the certificate is effective only for the individual's third or fourth taxable year ending after 1954 and all succeeding taxable years, the individual may make such a certificate effective for his first taxable year ending after 1955 and all succeeding taxable years by filing a supplemental certificate on Form 2031. To be valid the supplemental certificate must be filed after August 30, 1957, and on or before the due date of the return (including any extension thereof) for his second taxable year ending after 1956 and must be otherwise in accordance with § 1.1402(e)(1)–1.

Example. M, who files his income tax returns on a calendar year basis, was ordained as a minister in 1956, and his net earnings from service performed in the exercise of his ministry during such year were $400 or more. M had no net earnings from the exercise of his ministry during 1957. On July 15, 1957, M filed a waiver certificate and indicated thereon that it was to become effective for the taxable year 1958. At the time of filing, the certificate was effective for 1958 and all succeeding taxable years. Since the certificate was not filed on or before April 15, 1957 (the due date of M's income tax return for the taxable year 1956), and since there was no extension of time for filing his 1956 income tax return, the certificate was not, at the time of filing, effective for the taxable year 1956. M files a supplemental certificate on April 15, 1958. By the filing of the supplemental certificate, the certificate filed by M on July 15, 1957, was made effective for the year 1956 and all succeeding taxable years.

(ii) *Filed after September 13, 1960, and on or before April 16, 1962*. If under subparagraph (1) of this paragraph the certificate is effective only for the individual's first taxable year ending after 1956 and all succeeding taxable years, the individual may make such certificate effective for his first taxable year ending after 1955 and all succeeding taxable years by:

(*a*) Filing a supplemental certificate on Form 2031 after September 13, 1960, and before April 17, 1962;

(*b*) Paying on or before April 16, 1962, the tax under section 1401 in respect of all the individual's self-employment income (except for underpayments of tax attributable to errors made in good faith) for his first taxable year ending after 1955; and

(*c*) By repaying on or before April 16, 1962, the amount of any refund (including any interest paid under section 6611) that has been made of any such tax which (but for section 1402(e)(3)(B)) is an overpayment.

Any payment or repayment described in section 1402(e)(3)(B) and in this subparagraph shall not constitute an overpayment within the meaning of section 6401 which relates to amounts treated as overpayments. See section 6401 and the regulations thereunder in part 301 of this chapter (Regulations on Procedure and Administration).

Example. M, who files his income tax returns on a calendar year basis, was ordained as a minister in 1956, and his net earnings from service performed in the exercise of his ministry during each of the years 1956 and 1957 were $400 or more. On July 15, 1957, M filed a waiver certificate which became effective, at the time of filing, for 1957 and all succeeding taxable years. Since the certificate was not filed on or before April 15, 1957 (the due date of M's income tax return for the taxable year 1956), and since there was no extension of time for filing his 1956 income tax return, the certificate was not, at the time of filing, effective for the taxable year 1956. M files a supplemental certificate on April 17, 1961. If, in addition to the filing of the supplemental certificate, M pays on or before April 16, 1962, the self-employment tax in respect of all his self-employment income (except for underpayments of tax attributable to errors made in good faith) for his taxable year 1956, and repays, on or before April 16, 1962, the amount of any refund (including any interest paid under section 6611) that has been made of any such tax which (but for section 1402(e)(3)(B)) is an overpayment, the certificate filed by M on July 15, 1957, becomes effective for the year 1956 and all succeeding taxable years.

(b) *Filed after August 30, 1957, and before the due date of the 1958 return*. A certificate on Form 2031 filed by an individual after August 30, 1957, but on or before the due date of the return (including any extension thereof) for his second taxable year ending after 1956, in accordance with the provisions of section 1402(e) in effect at the time the certificate is filed, shall be effective for his first taxable year ending after 1955, and all subsequent taxable years.

(c) *Filed after due date of 1958 return*—(1) *In general*. Except as otherwise provided in § 1.1402(e)(5)–1 (applicable to certificates filed within the period September 14, 1960, to April 16, 1962, inclusive) and in subparagraphs (2) and (3) of

this paragraph, a certificate on Form 2031 filed by an individual in accordance with the provisions of §§ 1.1402(e)(1)–1 and 1.1402(e)(2)–1, inclusive, after the due date of the return (including any extension thereof) for his second taxable year ending after 1956 shall be effective for the taxable year immediately preceding the earliest taxable year for which, at the time the certificate is filed, the period for filing a return (including any extension thereof) has not expired, and for all succeeding taxable years.

Example. M, a duly ordained minister of a church, makes his income tax returns on the basis of a calendar year. M has not been granted an extension of time for filing any return. On April 15, 1963, the due date of his income tax return for 1962, M files a waiver certificate pursuant to § 1.1402(e)(1)–1 and within the time limitation set forth in § 1.1402(e)(2)–1. On April 15, 1963, the year 1962 is the earliest taxable year for which the period for filing a return has not expired. Consequently, M's certificate is effective for 1961 and all succeeding taxable years. M must report and pay any self-employment tax due for 1961 and 1962. (The tax, if any, for 1962 is due on April 15, 1963.) Inasmuch as the due date of the tax for 1961 is April 16, 1962, M must pay interest on any tax due for 1961. For provisions relating to such interest, see § 301.6601–1 of Part 301 of this chapter (Regulations on Procedure and Administration).

(2) *Filed after October 13, 1964, and on or before the due date of return for second taxable year ending after 1962.* A certificate on Form 2031 filed by an individual in accordance with the provisions of §§ 1.1402(e)(1)–1 and 1.1402(e)(2)–1, inclusive, after October 13, 1964, and on or before the due date of the return (including any extension thereof) for his second taxable year ending after 1962 (April 15, 1965, in the case of a calendar year taxpayer who has not been granted an extension of time for filing his income tax return for 1964) shall be effective for his first taxable year ending after 1961 and all succeeding taxable years.

Example. M, a duly ordained minister of a church, makes his income tax returns on the basis of a calendar year. M has not been granted an extension of time for filing any return. On April 15, 1965, the due date of his income tax return for 1964, M files a waiver certificate pursuant to § 1.1402(e)(1)–1 and within the time limitation set forth in § 1.1402(e)(2)–1. M's certificate is effective for 1962 and all succeeding taxable years, and he must report and pay any self-employment tax due for 1962, 1963, and 1964. (The tax, if any, for 1964 is due on April 15, 1965.) Inasmuch as the due dates of the tax for 1962 and 1963 are April 15, 1963, and April 15, 1964, respectively, M must pay interest on any tax due for 1962 or 1963. For provisions relating to such interest, see § 301.6601–1 of Part 301 of this chapter (Regulations on Procedure and Administration).

(3) *Filed after July 30, 1965, and on or before the due date of return for second taxable year ending after 1963.* A certificate on Form 2031 filed by an individual in accordance with the provisions of §§ 1.1402(e)(1)–1 and 1.1402(e)(2)–1, inclusive, after July 30, 1965, and on or before the due date of the return (including any extension thereof) for his second taxable year ending after 1963 (Apr. 15, 1966, in the case of a calendar year taxpayer who has not been granted an extension of time for filing his income tax return for 1965) shall be effective for his first taxable year ending after 1962 and all succeeding taxable years.

Example. M, a duly ordained minister of a church, makes his income tax returns on the basis of a calendar year. M has not been granted an extension of time for filing any return. On April 15, 1966, the due date of his income tax return for 1965, M files a waiver certificate pursuant to § 1.1402(e)(1)–1 and within the time limitation set forth in § 1.1402(e)(2)–1. M's certificate is effective for 1963 and all succeeding taxable years, and he must report and pay any self-employment tax due for 1963, 1964, and 1965. (The tax, if any, for 1965 is due on April 15, 1966.) Inasmuch as the due dates of the tax for 1963 and 1964 are April 15, 1964, and April 15, 1965, respectively, M must pay interest on any tax due for 1963 or 1964. For provisions relating to such interest, see § 301.6601–1 of Part 301 of this chapter (Regulations on Procedure and Administration).

(d) *Election irrevocable.* An election which has become effective pursuant to this section is irrevocable. A certificate may not be withdrawn after June 30, 1961.

[T.D. 6691, 28 FR 12796, Dec. 3, 1963, as amended by T.D. 6978, 33 FR 15939, Oct. 30, 1968]

§ 1.1402(e)(4)–1 Treatment of certain remuneration paid in 1955 and 1956 as wages.

If in 1955 or 1956 an individual was paid remuneration for service described

in section 3121(b)(8)(A) which was erroneously treated by the organization employing him (under a certificate filed by such organization pursuant to section 3121(k) or the corresponding section of prior law) as employment, within the meaning of the Federal Insurance Contributions Act (Chapter 21 of the Internal Revenue Code), and if on or before August 30, 1957, the taxes imposed by sections 3101 and 3111 were paid (in good faith and upon the assumption that the insurance system established by title II of the Social Security Act had been extended to such service) with respect to any part of the remuneration paid to such individual for such service, then the remuneration with respect to which such taxes were paid, and with respect to which no credit or refund of such taxes (other than a credit or refund which would be allowable if such service had constituted employment) has been obtained either by the employer or the employee on or before August 30, 1957, shall be deemed, for purposes of the Self-Employment Contributions Act of 1954 and the Federal Insurance Contributions Act, to constitute remuneration paid for employment and not net earnings from self-employment. For regulations relating to section 3121(b)(8)(A) and (k), see §§ 31.3121(b)(8)–1 and 31.3121(k)–1 of subpart B of part 31 of this chapter (Employment Tax Regulations).

§ 1.1402(e)(5)–1 Optional provision for certain certificates filed before April 15, 1962.

(a) *Certificates.* (1) The optional provision contained in section 1402(e)(5)(A) may be applied to a certificate on Form 2031 filed within the period September 14, 1960, to April 16, 1962, inclusive, in the case of a duly ordained, commissioned, or licensed minister of a church, a member of a religious order (other than a member of a religious order who has taken a vow of poverty as a member of such order), or a Christian Science practitioner, who has derived net earnings, in any taxable year ending after 1954 and before 1960, from the performance of service in the exercise of his ministry, in the exercise of duties required by his religious order, or in the exercise of his profession as a Christian Science practitioner, respectively, and who has reported such earnings as self-employment income on a return filed before September 14, 1960, and on or before the date prescribed for filing such return (including any extension thereof). The certificate may be filed by such minister, member of a religious order, or Christian Science practitioner or by a fiduciary acting for such individual or his estate, or by his survivor within the meaning of section 205(c)(1)(C) of the Social Security Act, and it must be filed after September 13, 1960, and on or before April 16, 1962. Subject to the conditions stated in subparagraph (2) of this paragraph, such certificate may be effective at the election of the person filing it, for the first taxable year ending after 1954 and before 1960 for which a return, as described in the first sentence of this subparagraph, was filed, and for all succeeding taxable years, rather than for the period prescribed in § 1.1402(e)(3)–1. The election for retroactive application of the certificate may be made by indicating on the certificate the first taxable year for which it is to be effective and that such year is the first taxable year ending after 1954 and before 1960 for which the minister, member of a religious order, or Christian Science practitioner filed an income tax return on which he reported net earnings for such year from the exercise of his ministry, the exercise of duties required by his religious order, or the exercise of his profession as a Christian Science practitioner, as the case may be, and by fulfilling the conditions prescribed in subparagraph (2) of this paragraph.

(2) A certificate to which subparagraph (1) of this paragraph relates may be effective for a taxable year prior to the taxable year immediately preceding the earliest taxable year for which, at the time the certificate is filed, the period for filing a return (including any extension thereof) has not expired, only if the following conditions are met:

(i) The tax under section 1401 is paid on or before April 16, 1962, in respect of all self-employment income (whether or not derived from the performance of service by the individual in the exercise of his ministry, in the exercise of

duties required by his religious order, or in the exercise of his profession as a Christian Science practitioner, as the case may be) for the first taxable year ending after 1954 and before 1960 for which such individual has filed a return, as described in subparagraph (1) of this paragraph, and for each succeeding taxable year ending before 1960; and

(ii) In any case where refund has been made of any such tax which (but for section 1402(e)(5)) is an overpayment, the amount refunded (including any interest paid under section 6611) is repaid on or before April 16, 1962. For regulations under section 6611 (relating to interest on overpayments), see § 301.6611–1 of part 301 of this chapter (Regulations on Procedure and Administration).

(b) *Supplemental certificates.* (1) Subject to the conditions stated in subparagraph (2) of this paragraph, a certificate on Form 2031 filed on or before September 13, 1960, by a minister, member of a religious order, or a Christian Science practitioner described in paragraph (a)(1) of this section and which (but for section 1402(e)(5)(B)) is ineffective for the first taxable year ending after 1954 and before 1959 for which such a return as described in paragraph (a)(1) of this section was filed by such individual, shall be effective for such first taxable year and for all succeeding taxable years, provided a supplemental certificate is filed by such individual or by a fiduciary acting for him or his estate, or by his survivor (within the meaning of section 205(c)(1)(C) of the Social Security Act), after September 13, 1960 and on or before April 16, 1962.

(2) The filing of a supplemental certificate pursuant to subparagraph (1) of this paragraph will give retroactive effect to a certificate to which such subparagraph applies only if the following conditions are met:

(i) The tax under section 1401 is paid on or before April 16, 1962, in respect of all self-employment income (whether or not attributable to earnings as a minister, member of a religious order, or Christian Science practitioner) for the first taxable year for which the certificate is retroactively effective and for each subsequent year ending before 1959; and

(ii) In any case where refund has been made of any such tax which (but for section 1402(d)(5)) is an overpayment, the amount refunded (including any interest paid under section 6611) is repaid on or before April 16, 1962.

(c) *Underpayment of tax.* For purposes of this section, any underpayment of the tax which is attributable to an error made in good faith will not invalidate an election which is otherwise valid.

(d) *Nonapplicability of section 6401.* Any payment or repayment described in paragraph (a)(2) or paragraph (b)(2) of this section shall not constitute an overpayment within the meaning of section 6401 which relates to amounts treated as overpayments. For the provisions of section 6401 and the regulations thereunder, see section 6401 and § 301.6401–1 of part 301 of this chapter (Regulations on Procedure and Administration).

§ 1.1402(e)(5)–2 Optional provisions for certain certificates filed on or before April 17, 1967.

(a) *In general*—(1) *General rule.* Section 1402(e)(5), as amended by the Social Security Amendments of 1965, applies only in the case of a duly ordained, commissioned, or licensed minister of a church, a member of a religious order (other than a member of a religious order who has taken a vow of poverty as a member of such order), or a Christian Science practitioner, who has derived net earnings in any taxable year ending after 1954 from the performance of service in the exercise of his ministry, in the exercise of duties required by his religious order, or in the exercise of his profession as a Christian Science practitioner, respectively, and who has reported such earnings as self-employment income on a return filed on or before the date prescribed for filing such return (including any extension thereof).

(2) *Supplemental certificate.* Subject to the conditions stated in subparagraph (4) of this paragraph, a certificate on Form 2031 filed on or before April 15, 1966, by a minister, member of a religious order, or a Christian Science practitioner described in subparagraph

(1) of this paragraph and which (but for section 1402(e)(5)(A)) is ineffective for the first taxable year ending after 1954 for which a return described in subparagraph (1) of this paragraph was filed by such individual, shall be effective for such first taxable year and for all succeeding taxable years, provided a supplemental certificate is filed by such individual or by a fiduciary acting for him or his estate, or by his survivor (within the meaning of section 205(c)(1)(C) of the Social Security Act), after July 30, 1965 (the date of enactment of the Social Security Amendments of 1965), and on or before April 17, 1967.

(3) *Certificate filed by survivor*. A survivor (within the meaning of section 205(c)(1)(C) of the Social Security Act) of an individual who:

(i) Died on or before April 15, 1966,

(ii) Was a minister, member of a religious order, or a Christian Science practitioner described in subparagraph (1) of this paragraph,

(iii) Has filed a return as described in subparagraph (1) of this paragraph for a taxable year ending after 1954, and

(iv) Had not filed a valid waiver certificate on Form 2031,

may file a certificate on Form 2031 on behalf of such individual. The certificate must be filed after July 30, 1965 (the date of enactment of the Social Security Amendments of 1965), and on or before April 17, 1967. Subject to the conditions stated in subparagraph (4) of this paragraph, such certificate shall be effective for the first taxable year ending after 1954 for which a return, as described in subparagraph (1) of this paragraph, was filed by such individual and for all succeeding taxable years.

(4) *Applicable conditions*. A supplemental certificate referred to in subparagraph (2) of this paragraph and a certificate referred to in subparagraph (3) of this paragraph shall be effective only if the following conditions are met:

(i) The tax under section 1401 is paid on or before April 17, 1967, in respect of all self-employment income (whether or not attributable to earnings as a minister, member of a religious order, or Christian Science practitioner) for the first taxable year ending after 1954 for which the individual (by or in respect of whom the supplemental certificate or certificate is filed) has filed a return, as described in paragraph (1) of this paragraph, and for each succeeding taxable year ending before January 1, 1966; and

(ii) In any case where refund has been made of any such tax which (but for section 1402(e)(5)) is an overpayment, the amount refunded (including any interest paid under section 6611) is repaid on or before April 17, 1967. For regulations under section 6611 (relating to interest on overpayments), see § 301.6611–1 of part 301 of this chapter (Regulations on Procedure and Administration).

(b) *Underpayment of tax*. For purposes of this section, any underpayment of the tax which is attributable to an error made in good faith will not invalidate an election which is otherwise valid.

(c) *Nonapplicability of section 6401*. Any payment or repayment described in paragraph (a)(4) of this section shall not constitute an overpayment within the meaning of section 6401 which relates to amounts treated as overpayments. For the provisions of section 6401 and the regulations thereunder, see section 6401 and § 301.6401–1 of part 301 of this chapter (Regulations on Procedure and Administration).

(d) *Applicability of §§ 1.1402(e) (5)–1 and 1.1402(e)(6)–1*. The provisions of section 1402(e) (5) and (6) (in effect prior to July 30, 1965, the date of enactment of the Social Security Amendments of 1965) and §§ 1.1402(e) (5)–1 and 1.1402(e)(6)–1 shall apply with respect to any certificate filed pursuant to such sections if a supplemental certificate is not filed with respect to such certificate as provided in this section.

[T.D. 6978, 33 FR 15939, Oct. 30, 1968]

§ 1.1402(e)(6)–1 Certificates filed by fiduciaries or survivors on or before April 15, 1962.

In any case in which an individual whose death has occurred after September 12, 1960, and before April 16, 1962, derived earnings from the performance of services as a duly ordained, commissioned, or licensed minister of a church in the exercise of his ministry, as a member of a religious

order (other than a member of a religious order who has taken a vow of poverty as a member of such order) in the exercise of duties required by such order, or in the exercise of his profession as a Christian Science practitioner, a waiver certificate on Form 2031 may be filed after June 30, 1961 (the date of enactment of the Social Security Amendments of 1961), and on or before April 16, 1962, by a fiduciary acting for such individual's estate or by such individual's survivor within the meaning of section 205(c)(1)(C) of the Social Security Act. Such certificates shall be effective for the period prescribed in section 1402(e)(3)(A) (see §1.1402(e)(3)–1(c)) as if filed by the individual on the date of his death.

§ 1.1402(f)–1 Computation of partner's net earnings from self-employment for taxable year which ends as result of his death.

(a) *Taxable years ending after August 28, 1958*—(1) *In general.* The rules for the computation of a partner's net earnings from self-employment are set forth in paragraphs (d) to (g), inclusive, of §1.1402(a)–2. In addition to the net earnings from self-employment computed under such rules for the last taxable year of a deceased partner, if a partner's taxable year ends after August 28, 1958, solely because of death, and on a day other than the last day of the partnership's taxable year, the deceased partner's net earnings from self-employment for such year shall also include so much of the deceased partner's distributive share of partnership ordinary income or loss (see subparagraph (3) of this paragraph) for the taxable year of the partnership in which his death occurs as is attributable to an interest in the partnership prior to the month following the month of his death.

(2) *Computation.* (i) The deceased partner's distributive share of partnership ordinary income or loss for the partnership taxable year in which he died shall be determined by applying the rules contained in paragraphs (d) to (g), inclusive, of §1.1402(a)–2, except that paragraph (e) shall not apply.

(ii) The portion of such distributive share to be included under this section in the deceased partner's net earnings from self-employment for his last taxable year shall be determined by treating the ordinary income or loss constituting such distributive share as having been realized or sustained ratably over the period of the partnership taxable year during which the deceased partner had an interest in the partnership and during which his estate, or any other person succeeding by reason of his death to rights with respect to his partnership interest, held such interest in the partnership or held a right with respect to such interest. The amount to be included under this section in the deceased partner's net earnings from self-employment for his last taxable year will, therefore, be determined by multiplying the deceased partner's distributive share of partnership ordinary income or loss for the partnership taxable year in which he died, as determined under subdivision (i) of this subparagraph, by a fraction, the denominator of which is the number of calendar months in the partnership taxable year over which the ordinary income or loss constituting the deceased partner's distributive share of partnership income or loss for such year is treated as having been realized or sustained under the preceding sentence and the numerator of which is the number of calendar months in such partnership taxable year that precede the month following the month of his death.

(3) *Definition of ''deceased partner's distributive share''.* For the purpose of this section, the term ''deceased partner's distributive share'' includes the distributive share of his estate or of any other person succeeding, by reason of his death, to rights with respect to his partnership interest. It does not include any share attributable to a partnership interest which was not held by the deceased partner at the time of his death. Thus, if a deceased partner's estate should acquire an interest in a partnership additional to the interest to which it succeeded upon the death of the deceased partner, the amount of the distributive share attributable to such additional interest acquired by the estate would not be included in computing the ''deceased partner's distributive share'' of the partnership's

ordinary income or loss for the partnership taxable year.

(4) *Examples*. The application of this paragraph may be illustrated by the following examples:

Example (1). B, an individual who files his income tax returns on the calendar year basis, is a member of the ABC partnership, the taxable year of which ends on June 30. B dies on October 17, 1958, and his estate succeeds to his partnership interest and continues as a partner in its own right under local law until June 30, 1959. B's distributive share of the partnership's ordinary income, as determined under paragraphs (d) to (g), inclusive, of §1.1402(a)–2, for the taxable year of the partnership ended June 30, 1958 is $2,400. His distributive share, including the share of his estate, of such partnership's ordinary income, as determined under paragraphs (d) to (g), inclusive, of §1.1402(a)–2 (with the exception of paragraph (e)), for the taxable year of the partnership ended June 30, 1959 is $4,500. The portion of such $4,500 attributable to an interest in the partnership prior to the month following the month in which he died is $4,500×4/12 (4 being the number of months in the partnership taxable year in which B died which precede the month following the month of his death and 12 being the number of months in such partnership taxable year in which B and his estate had an interest in the partnership) or $1,500. The amount to be included in the deceased partner's net earnings from self-employment for his last taxable year is $3,900 ($2,400 plus $1,500).

Example (2). If in the preceding example B's estate is entitled to only $1,000, the amount of B's distributive share of partnership ordinary income for the period July 1, 1958 through October 17, 1958, such $1,000 is considered to have been realized ratably over the period preceding B's death and will be included in B's net earnings from self-employment for his last taxable year.

Example (3). X, who reports his income on a calendar year basis, is a member of a partnership which also reports its income on a calendar year basis. X dies on June 30, 1959, and his estate succeeds to his partnership interest and continues as a partner in its own right under local law. On September 15, 1959, X's estate sells the partnership interest to which it succeeded on the death of X. X's distributive share of partnership income for 1959 is $5,500. $600 of such amount is X's share of the gain from the sale of a capital asset which occurs on May 1, 1959, and $400 of such amount is the estate's share of the gain from the sale of a capital asset which occurs on July 15, 1959. The remainder of such amount is income from services rendered. X's distributive share of partnership ordinary income for 1959, as determined under paragraphs (d) to (g), inclusive, of §1.1402(a)–2 (with the exception of paragraph (e)), is $4,500 ($5,500 minus $1,000). The portion of such share attributable to an interest in the partnership prior to the month following the month of his death is $4,500×6/8.5 (6 being the number of months in the partnership taxable year in which X died as precede the month following the month of his death and 8.5 being the number of months in such partnership taxable year in which X and his estate had an interest in the partnership) or $3,176.47.

(b) *Options available to farmers*—(1) *Special rule*. In determining whether the optional method available to a member of a farm partnership in computing his net earnings from self-employment may be applied, and in applying such method, it is necessary to determine the partner's distributive share of partnership gross income and the partner's distributive share of income described in section 702(a)(9). See section 1402(a) and §1.1402(a)–15. If section 1402(f) and this section apply, or may be made applicable under section 403(b)(2) of the Social Security Amendments of 1958 and paragraph (c) of this section, for the last taxable year of a deceased partner, such partner's distributive share of income described in section 702(a)(9) for his last taxable year shall be determined by including therein any amount which is included under section 1402(f) and this section in his net earnings from self-employment for such taxable year. Such a partner's distributive share of partnership gross income for his last taxable year shall be determined by including therein so much of the deceased partner's distributive share (see paragraph (a)(3) of this section) of partnership gross income, as defined in section 1402(a) and paragraph (b) of §1.1402(a)–15, for the partnership taxable year in which he died as is attributable to an interest in the partnership prior to the month following the month of his death. Such allocation shall be made in the same manner as is prescribed in paragraph (a)(2) of this section for determining the portion of a deceased partner's distributive share of partnership ordinary income or loss to be included under section 1402(f) and this section in his net earnings from self-employment for his last taxable year.

(2) *Examples*. The principles set forth in this paragraph may be illustrated by the following examples:

Example (1). X, an individual who files his income tax returns on a calendar year basis, is a member of the XYZ farm partnership, the taxable year of which ends on March 31. X dies on May 31, 1967, and his estate succeeds to his partnership interest and continues as a partner in its own right under local law until March 31, 1968. X's distributive share of the partnership's ordinary income, determined under paragraphs (d) to (g), inclusive, of §1.1402(a)–2, for the taxable year of the partnership ended March 31, 1967, is $1,600. His distributive share, including the share of his estate, of such partnership's ordinary loss as determined under paragraphs (d) to (g), inclusive, of §1.1402(a)–2 (with the exception of paragraph (e)), for the taxable year of the partnership ended March 31, 1968, is $1,200. The portion of such $1,200 attributable to an interest in the partnership prior to the month following the month in which he died is $1,200×2/12 (2 being the number of months in the partnership taxable year in which X died which precede the month following the month of his death and 12 being the number of months in such partnership taxable year in which X and his estate had an interest in the partnership) or $200. X is also a member of the ABX farm partnership, the taxable year of which ends on May 31. His distributive share of the partnership loss described in section 702(a)(9) for the partnership taxable year ending May 31, 1967, is $300. Section 1402(f) and this section do not apply with respect to such $300 since X's last taxable year ends, as a result of his death, with the taxable year of the ABX partnership. Under this paragraph the $200 loss must be included in determining X's distributive share of XYZ partnership income described in section 702(a)(9) for the purpose of applying the optional method available to farmers for computing net earnings from self-employment. Further, the resulting $1,400 of income must be aggregated, pursuant to paragraph (c) of §1.1402(a)–15, with the $300 loss, X's distributive share of ABX partnership loss described in section 702(a)(9), for purposes of applying such option. The representative of X's estate may exercise the option described in paragraph (a)(2)(ii) of §1.1402(a)–15, provided the portion of X's distributive share of XYZ partnership gross income for the taxable year ended March 31, 1968, attributable to an interest in the partnership prior to the month following the month in which he died (the allocation being made in the manner prescribed for allocating his $1,200 distributive share of XYZ partnership loss for such year), when aggregated with his distributive share of XYZ partnership gross income for the partnership taxable year ended March 31, 1967, and with his distributive share of ABX partnership gross income for the partnership taxable year ended May 31, 1967, results in X having more than $2,400 of gross income from the trade or business of farming. If such aggregate amount of gross income is not more than $2,400, the option described in paragraph (a)(2)(i) of §1.1402(a)–15, is available.

Example (2). A, a sole proprietor engaged in the business of farming, files his income tax returns on a calendar year basis. A is also a member of a partnership engaged in an agricultural activity. The partnership files its returns on the basis of a fiscal year ending March 31. A dies June 29, 1967. A's gross income from farming as a sole proprietor for the 6-month period comprising his taxable year which ends because of death is $1,600 and his actual net earnings from self-employment based thereon are $400. As of March 31, 1967, A's distributive share of the gross income of the farm partnership is $2,200 and his distributive share of income described in section 702(a)(9) based thereon is $1,000. The amount of A's distributive share of the partnership's ordinary income for its taxable year ended March 31, 1968, which may be included in his net earnings from self-employment under section 1402(f) and paragraph (a) of this section is $300. The amount of the deceased partner's distributive share of partnership gross income attributable to an interest in the partnership prior to the month following the month of his death as is determined, pursuant to subparagraph (1) of this paragraph, under paragraph (a) of this section is $2,000. An aggregation of the above figures produces a gross income from farming of $5,800 and actual net earnings from self-employment of $1,700. Under these circumstances none of the options provided by section 1402(a) may be used. If the actual net earnings from self-employment had been less than $1,600, the option described in paragraph (a)(2)(ii) of §1.1402(a)–15 would have been available.

(c) *Taxable years ending after 1955 and on or before August 28, 1958*—(1) *Requirement of election*. If a partner's taxable year ended, as a result of his death, after 1955 and on or before August 28, 1958, the rules set forth in paragraph (a) of this section may be made applicable in computing the deceased partner's net earnings from self-employment for his last taxable year provided that:

(i) Before January 1, 1960, there is filed, by the person designated in section 6012(b)(1) and paragraph (b)(1) of §1.6012–3, a return (or amended return) of the tax imposed by chapter 2 for the taxable year ending as a result of death, and

(ii) Such return, if filed solely for the purpose of reporting net earnings from self-employment resulting from the enactment of section 1402(f), is accompanied by the amount of tax attributable to such net earnings.

(2) *Administrative rule of special application.* Notwithstanding the provisions of sections 6601, 6651, and 6653 (see such sections and the regulations thereunder) no interest or penalty shall be assessed or collected on the amount of any self-employment tax due solely by reason of the operation of section 1402(f) in the case of an individual who died after 1955 and before August 29, 1958.

[T.D. 6691, 28 FR 12796, Dec. 3, 1963, as amended by T.D. 6993, 34 FR 830, Jan. 18, 1969]

§ 1.1402(g)–1 Treatment of certain remuneration erroneously reported as net earnings from self-employment.

(a) *General rule.* If an amount is erroneously paid as self-employment tax, for any taxable year ending after 1954 and before 1962, with respect to remuneration for service (other than service described in section 3121(b)(8)(A)) performed in the employ of an organization described in section 501(c)(3) and exempt from income tax under section 501(a), and if such remuneration is reported as self-employment income on a return filed on or before the due date prescribed for filing such return (including any extension thereof), the individual who paid such amount (or a fiduciary acting for such individual or his estate, or his survivor (within the meaning of section 205(c)(1)(C) of the Social Security Act)), may request that such remuneration be deemed to constitute net earnings from self-employment. If such request is filed during the period September 14, 1960, to April 16, 1962, inclusive, and on or after the date on which the organization which paid such remuneration to such individual for services performed in its employ has filed, pursuant to section 3121(k), a certificate waiving exemption from taxes under the Federal Insurance Contributions Act, and if no credit or refund of any portion of the amount erroneously paid for such taxable year as self-employment tax (other than a credit or refund which would be allowable if such tax were applicable with respect to such remuneration) has been obtained before the date on which such request is filed or, if obtained, the amount credited or refunded (including any interest under section 6611) is repaid on or before such date, then, for purposes of the Self-Employment Contributions Act of 1954 and the Federal Insurance Contributions Act, any amount of such remuneration which is paid to such individual before the calendar quarter in which such request is filed (or before the succeeding quarter if such certificate first becomes effective with respect to services performed by such individual in such succeeding quarter) and with respect to which no tax (other than an amount erroneously paid as tax) has been paid under the Federal Insurance Contributions Act, shall be deemed to constitute net earnings from self-employment and not remuneration for employment. If the certificate filed by such organization pursuant to section 3121(k) is not effective with respect to services performed by such individual on or before the first day of the calendar quarter in which the request is filed, then, for purposes of section 3121(b)(8)(B) (ii) and (iii), such individual shall be deemed to have become an employee of such organization (or to have become a member of a group, described in section 3121(k)(1)(E), of employees of such organization) on the first day of the succeeding quarter.

(b) *Request for validation.* (1) No particular form is prescribed for making a request under paragraph (a) of this section. The request should be in writing, should be signed and dated by the person making the request, and should indicate clearly that it is a request that, pursuant to section 1402(g) of the Code, remuneration for service described in section 3121(b)(8) (other than service described in section 3121(b)(8)(A)) erroneously reported as self-employment income for one or more specified years be deemed to constitute net earnings from self-employment and not remuneration for employment. In addition, the following information shall be shown in connection with the request:

(i) The name, address, and social security account number of the individual with respect to whose remuneration the request is made.

(ii) The taxable year or years (ending after 1954 and before 1962) to which the request relates.

(iii) A statement that the remuneration was erroneously reported as self-employment income on the individual's return for each year specified and that the return was filed on or before its due date (including any extension thereof).

(iv) Location of the office of the district director with whom each return was filed.

(v) A statement that no portion of the amount erroneously paid by the individual as self-employment tax with respect to the remuneration has been credited or refunded (other than a credit or refund which would have been allowable if the tax had been applicable with respect to the remuneration); or, if a credit or refund of any portion of such amount has been obtained, a statement identifying the credit or refund and showing how and when the amount credited or refunded, together with any interest received in connection therewith, was repaid.

(vi) The name and address of the organization which paid the remuneration to the individual.

(vii) The date on which the organization filed a waiver certificate on Form SS–15, and the location of the office of the district director with whom it was filed.

(viii) The date on which the certificate became effective with respect to services performed by the individual.

(ix) If the request is made by a person other than the individual to whom the remuneration was paid, the name and address of that person and evidence which shows the authority of such person to make the request.

(2) The request should be filed with the district director of internal revenue with whom the latest of the returns specified in the request pursuant to subparagraph (1)(iii) of this paragraph was filed.

(c) *Cross references.* For regulations relating to section 3121 (b)(8) and (k), see §§ 31.3121(b)(8)–2 and 31.3121(k)–1 of subpart B of part 31 of this chapter (Employment Tax Regulations). For regulations relating to exemption from income tax of an organization described in section 501(c)(3), see § 1.501(c)(3)–1.

§ 1.1402(h)–1 Members of certain religious groups opposed to insurance.

(a) *In general.* An individual—(1) Who is a member of a recognized religious sect or division thereof and,

(2) Who is an adherent of established tenets or teachings of such sect or division and by reason thereof is conscientiously opposed to acceptance of the benefits of any private or public insurance which makes payments in the event of death, disability, old age, or retirement or makes payments toward the cost of, or provides services for, medical care (including the benefits of any insurance system established by the Social Security Act),

may file an application for exemption from the tax under section 1401. The form of insurance to which section 1402(h) and this section refer does not include liability insurance of a kind that provides only for the protection of other persons, or property of other persons, who may be injured or damaged by or on property belonging to, or by an action of, an individual who otherwise meets the requirements of this section. An application for exemption under section 1402(h) and this section shall be made in the manner provided in paragraph (b) of this section and within the time specified in paragraph (c) of this section. For provisions relating to the filing of an application for exemption by a fiduciary or survivor, see paragraph (d) of this section.

(b) *Application for exemption.* The application for exemption shall be filed on Form 4029 in duplicate with the internal revenue official or office designated on the form. The filing of a return by a member of a religious group opposed to insurance showing no self-employment income or self-employment tax shall not be construed as an application for exemption referred to in paragraph (a) of this section.

(c) *Time limitation for filing application for exemption*—(1) *Taxable years ending before December 31, 1967.* A member of a religious group opposed to insurance within the meaning of paragraph (a) of this section:

(i) Who has self-employment income (determined without regard to subsections (c)(6) and (h) of section 1402 and this section) for one or more taxable years ending before December 31, 1967, and

(ii) Who desires to be exempt from the payment of the self-employment tax under section 1401,

must file the application for exemption on or before December 31, 1968.

(2) *Taxable year ending on or after December 31, 1967*—(i) *General rule.* Except as provided in subdivision (ii) of this subparagraph, a member of a religious group opposed to insurance within the meaning of paragraph (a) of this section:

(*a*) Who has no self-employment income (determined without regard to subsections (c)(6) and (h) of section 1402 and this section) for any taxable year ending before December 31, 1967, and

(*b*) Who desires to be exempt from the payment of the self-employment tax under section 1401 for any taxable year ending on or after December 31, 1967,

must file the application for exemption on or before the due date of the income tax return (see section 6072), including any extension thereof (see section 6081), for the first taxable year ending on or after December 31, 1967, for which he has self-employment income (determined without regard to subsections (c)(6) and (h) of section 1402 and this section.

(ii) *Exception to general rule.* If an individual to whom subdivision (i) of this subparagraph applies:

(*a*) Is notified in writing by a district director of internal revenue or the Director of International Operations that he has not filed the application for exemption on or before the date specified in such subdivision (i), and

(*b*) Files the application for exemption on or before the last day of the third calendar month following the calendar month in which he is so notified,

such application shall be considered a timely filed application for exemption.

(d) *Application by fiduciary or survivor.* If an individual who was a member of a religious group opposed to insurance dies before the expiration of the time prescribed in section 1402(h)(2) and paragraph (c) of this section during which an application could have been filed by him, an application for exemption with respect to such deceased individual may be filed by a fiduciary acting for such individual's estate or by such individual's survivor within the meaning of section 205(c)(1)(C) of the Social Security Act. An application for exemption with respect to a deceased individual executed by a fiduciary or survivor may be approved only if it could have been approved if the individual were not deceased and had filed the application on the date the application was filed by the fiduciary or executor.

(e) *Approval of application for exemption*—(1) *In general.* The filing of an application for exemption on Form 4029 by a member of a religious group opposed to insurance does not constitute an exemption from the payment of the tax on self-employment income. An individual who files such an application is exempt from the payment of the tax only if the application is approved by the official with whom the application is required to be filed (see paragraph (b) of this section).

(2) *Conditions relating to approval or disapproval of application.* An application for exemption on Form 4029 will not be approved unless the Secretary of Health, Education, and Welfare finds with respect to the religious sect or division thereof of which the individual filing the application is a member:

(i) That the sect or division thereof has the established tenets or teachings by reason of which the individual applicant is conscientiously opposed to the benefits of insurance of the type referred to in section 1402(h) (see paragraph (a) of this section),

(ii) That it is the practice, and has been for a period of time which the Secretary of Health, Education, and Welfare deems to be substantial, for members of such sect or division thereof to make provisions for their dependent members which, in the judgment of such Secretary, is reasonable in view of the general level of living of the members of the sect or division thereof; and

(iii) That the sect or division thereof has been in existence continuously since December 31, 1950.

In addition, an application for exemption on Form 4029 will not be approved

if any benefit or other payment under title II of title XVIII of the Social Security Act became payable (or, but for section 203, relating to reduction of insurance benefits, or 222(b), relating to reduction of insurance benefits on account of refusal to accept rehabilitation services, of the Social Security Act would have been payable) at or before the time of the filing of the application for exemption. Any determination required to be made pursuant to the preceding sentence will be made by the Secretary of Health, Education, and Welfare.

(f) *Period for which exemption is effective*—(1) *General rule*. An application for exemption shall be in effect (if approved as provided in paragraph (e) of this section) for all taxable years beginning after December 31, 1950, except as otherwise provided in subparagraph (2) of this paragraph.

(2) *Exceptions*. An application for exemption referred to in subparagraph (1) of this paragraph shall not be effective for any taxable year which:

(i) Begins (*a*) before the taxable year in which the individual filing the application first met the requirements of subparagraphs (1) and (2) of paragraph (a) of this section, or (*b*) before the time as of which the Secretary of Health, Education, and Welfare finds that the sect or division thereof of which the individual is a member met the requirements of subparagraphs (C) and (D) of section 1402(h)(1) (see subdivisions (i) and (ii) of paragraph (e)(2) of this section), or

(ii) Ends (*a*) after the time at which the individual filing the application ceases to meet the requirements of subparagraphs (1) and (2) of paragraph (a) of this section, or (*b*) after the time as of which the Secretary of Health, Education, and Welfare finds that the sect or division thereof of which the individual is a member ceases to meet the requirements of subparagraphs (C) and (D) of section 1402(h)(1) (see subdivisions (i) and (ii) of paragraph (e)(2) of this section).

(g) *Refund or credit*. An application for exemption on Form 4029 filed on or before December 31, 1968 (if approved as provided in paragraph (e) of this section), shall constitute a claim for refund or credit of any tax on self-employment income under section 1401 (or under section 480 of the Internal Revenue Code of 1939) paid or incurred in respect of any taxable year beginning after December 31, 1950, and ending before December 31, 1967, for which an exemption is granted. Refund or credit of any tax referred to in the preceding sentence may be made, pursuant to the provisions of section 501(c) of the Social Security Amendments of 1967 (81 Stat. 933), notwithstanding that the refund or credit would otherwise be prevented by operation of any law or rule of law. No interest shall be allowed or paid in respect of any refund or credit made or allowed in connection with a claim for refund or credit made on Form 4029.

[T.D. 6993, 34 FR 831, Jan. 18, 1969]

§ 1.1403–1 Cross references.

For provisions relating to the requirement for filing returns with respect to net earnings from self-employment, see § 1.6017–1. For provisions relating to declarations of estimated tax on self-employment income, see §§ 1.6015(a) to 1.6015(j)–1, inclusive. For other administrative provisions relating to the tax on self-employment income, see the applicable sections of the regulations in this part (§ 1.6001–1 *et seq.*) and the applicable sections of the regulations in part 301 of this chapter (Regulations on Procedure and Administration).

[T.D. 7427, 41 FR 34026, Aug. 12, 1976]

NET INVESTMENT INCOME TAX

§ 1.1411–0 Table of contents of provisions applicable to section 1411.

This section lists the table of contents for §§ 1.1411–1 through 1.1411–10.

§ 1.1411–1 General rules.

(a) General rule.
(b) Adjusted gross income.
(c) Effect of section 1411 and the regulations thereunder for other purposes.
(d) Definitions.
(e) Disallowance of certain credits against the section 1411 tax.
(f) Application to taxable years beginning before January 1, 2014.
(1) Retroactive application of regulations.
(2) Reliance and transitional rules.
(g) Effective/applicability date.

§ 1.1411–2 Application to individuals.

(a) Individual to whom tax applies.
(1) In general.
(2) Special rules.
(i) Dual resident individuals treated as residents of a foreign country under an income tax treaty.
(ii) Dual-status resident aliens.
(iii) Joint returns in the case of a nonresident alien individual married to a United States citizen or resident.
(A) Default treatment.
(B) Taxpayer election.
(*1*) Effect of election.
(*2*) Procedural requirements for making election.
(*3*) Ineffective elections.
(iv) Joint returns for a year in which nonresident alien married to a United States citizen or resident becomes a United States resident.
(A) Default treatment.
(B) Taxpayer election.
(*1*) Effect of election.
(*2*) Procedural requirements for making election.
(v) Grantor trusts.
(vi) Bankruptcy estates.
(vii) Bona fide residents of United States territories.
(A) Applicability.
(B) Coordination with exception for nonresident aliens.
(C) Definitions.
(*1*) Bona fide resident.
(*2*) United States territory.
(b) Calculation of tax.
(1) In general.
(2) Example.
(c) Modified adjusted gross income.
(1) General rule.
(2) Rules with respect to CFCs and PFICs.
(d) Threshold amount.
(1) In general.
(2) Taxable year of less than twelve months.
(i) General rule.
(ii) Change of annual accounting period.
(e) Effective/applicability date.

§ 1.1411–3 Application to Estates and Trusts

(a) Estates and trusts to which tax applies.
(1) In general.
(i) General application.
(ii) Calculation of tax.
(2) Taxable year of less than twelve months.
(i) General rule.
(ii) Change of annual accounting period.
(3) Rules with respect to CFCs and PFICs.
(b) Application to certain trusts and estates.
(1) Exception for certain trusts and estates.
(2) Special rules for certain taxable trusts and estates.
(i) Qualified funeral trusts.
(ii) Bankruptcy estates.
(c) Application to electing small business trusts (ESBTs).
(1) General application.
(2) Computation of tax.
(i) Step one.
(ii) Step two.
(iii) Step three.
(3) Example.
(d) Application to charitable remainder trusts (CRTs).
(1) Operational rules.
(i) Treatment of annuity or unitrust distributions.
(ii) Apportionment among multiple beneficiaries.
(iii) Accumulated net investment income.
(2) Application of section 664.
(i) General rule.
(ii) Special rules for CRTs with income from CFCs or PFICs [Reserved]
(iii) Examples.
(3) Elective simplified method. [Reserved]
(e) Calculation of undistributed net investment income.
(1) In general.
(2) Undistributed net investment income.
(3) Distributions of net investment income to beneficiaries.
(4) Deduction for amounts paid or permanently set aside for a charitable purpose.
(5) Examples.
(f) Effective/applicability date.

§ 1.1411–4 Definition of Net Investment Income

(a) In general.
(b) Ordinary course of a trade or business exception.
(c) Other gross income from a trade or business described in § 1.1411–5.
(d) Net gain.
(1) Definition of disposition.
(2) Limitation.
(3) Net gain attributable to the disposition of property.
(i) General rule.
(ii) Examples.
(4) Gains and losses excluded from net investment income.
(i) Exception for gain or loss attributable to property held in a trade or business not described in § 1.1411–5.
(A) General rule.
(B) Special rules for determining whether property is held in a trade or business.
(C) Examples.
(ii) Adjustments to gain or loss attributable to the disposition of interests in a partnership or S corporation.
(iii) Adjustment for capital loss carryforwards for previously excluded income. [Reserved]
(e) Net investment income attributable to certain entities.
(1) Distributions from estates and trusts.
(i) In general.

(ii) Distributions of accumulated net investment income from foreign nongrantor trusts to United States beneficiaries. [Reserved]
(2) CFCs and PFICs.
(3) Treatment of income from common trust funds. [Reserved]
(f) Properly allocable deductions.
(1) General rule.
(i) In general.
(ii) Limitations.
(2) Properly allocable deductions described in section 62.
(i) Deductions allocable to gross income from rents and royalties.
(ii) Deductions allocable to gross income from trades or businesses described in § 1.1411–5.
(iii) Penalty on early withdrawal of savings.
(iv) Net operating loss.
(v) Examples.
(3) Properly allocable deductions described in section 63(d).
(i) Investment interest expense.
(ii) Investment expenses.
(iii) Taxes described in section 164(a)(3).
(iv) Items described in section 72(b)(3).
(v) Items described in section 691(c).
(vi) Items described in section 212(3).
(vii) Amortizable bond premium.
(viii) Fiduciary expenses.
(4) Loss deductions.
(i) General rule.
(ii) Examples.
(5) Ordinary loss deductions for certain debt instruments.
(6) Other deductions.
(7) Application of limitations under sections 67 and 68.
(i) Deductions subject to section 67.
(ii) Deductions subject to section 68.
(iii) Itemized deductions.
(iv) Example.
(g) Special rules.
(1) Deductions allocable to both net investment income and excluded income.
(2) Recoveries of properly allocable deductions.
(i) General rule.
(ii) Recoveries of items allocated between net investment income and excluded income.
(iii) Recoveries with no prior year benefit.
(iv) Examples.
(3) Deductions described in section 691(b).
(4) Amounts described in section 642(h).
(5) Treatment of self-charged interest income.
(6) Treatment of certain nonpassive rental activities.
(i) Gross income from rents.
(ii) Gain or loss from the disposition of property.
(7) Treatment of certain real estate professionals.
(i) Safe harbor.
(ii) Definitions.
(A) Participation.
(B) Rental real estate activity.
(iii) Effect of safe harbor.
(8) Treatment of former passive activities.
(i) Section 469(f)(1)(A) losses.
(ii) Section 469(f)(1)(C) losses.
(iii) Examples.
(9) Treatment of section 469(g)(1) losses.
(10) Treatment of section 707(c) guaranteed payments. [Reserved]
(11) Treatment of section 736 payments. [Reserved]
(12) Income and deductions from certain notional principal contracts. [Reserved]
(13) Treatment of income or loss from REMIC residual interests. [Reserved]
(h) Net operating loss.
(1) In general.
(2) Applicable portion of a net operating loss.
(3) Section 1411 NOL amount of a net operating loss carried to and deducted in a taxable year.
(4) Total section 1411 NOL amount of a net operating loss deduction.
(5) Examples.
(i) Effective/applicability date.

§ 1.1411–5 Trades and Businesses to Which Tax Applies

(a) In general.
(b) Passive activity.
(1) In general.
(2) Application of income recharacterization rules.
(i) Income and gain recharacterization.
(ii) Gain recharacterization.
(iii) Exception for certain portfolio recharacterizations.
(3) Examples.
(c) Trading in financial instruments or commodities.
(1) Definition of financial instruments.
(2) Definition of commodities.
(d) Effective/applicability date.

§ 1.1411–6 Income on Investment of Working Capital Subject to Tax

(a) General rule.
(b) Example.
(c) Effective/applicability date.

§ 1.1411–7 Exception for Dispositions of Certain Active Interests in Partnerships and S Corporations [Reserved]

§ 1.1411–8 Exception for Distributions From Qualified Plans

(a) General rule.
(b) Rules relating to distributions.
(1) Actual distributions.
(2) Amounts treated as distributed.
(3) Amounts includible in gross income.
(4) Amounts related to employer securities.
(i) Dividends related to employer securities.

(ii) Amounts related to the net unrealized appreciation in employer securities.
(c) Effective/applicability date.

§ 1.1411–9 Exception for Self-Employment Income

(a) General rule.
(b) Special rule for traders.
(c) Examples.
(d) Effective/applicability date.

§ 1.1411–10 Controlled Foreign Corporations and Passive Foreign Investment Companies

(a) In general.
(b) Amounts derived from a trade or business described in § 1.1411–5.
(1) In general.
(2) Coordination rule for changes in trade or business status.
(c) Calculation of net investment income.
(1) Dividends.
(i) Distributions of previously taxed earnings and profits.
(A) Rules when an election under paragraph (g) of this section is not in effect with respect to the shareholder.
(*1*) General rule.
(*2*) Exception for distributions attributable to earnings and profits previously taken into account for purposes of section 1411.
(B) Rule when an election under paragraph (g) of this section is in effect with respect to the shareholder.
(C) Special rule for certain distributions related to 2013 taxable years.
(*1*) Scope.
(*2*) Rule.
(*3*) Ordering rule.
(ii) Excess distributions that constitute dividends.
(2) Net gain.
(i) Gains treated as excess distributions.
(ii) Inclusions and deductions with respect to section 1296 mark to market elections.
(iii) Gain or loss attributable to the disposition of stock of CFCs and QEFs.
(iv) Gain or loss attributable to the disposition of interests in domestic partnerships or S corporations that own directly or indirectly stock of CFCs or QEFs.
(3) Application of section 1248.
(4) Amounts distributed by an estate or trust.
(5) Properly allocable deductions.
(i) General rule.
(ii) Additional rules.
(d) Conforming basis adjustments.
(1) Basis adjustments under sections 961 and 1293.
(i) Stock held by individuals, estates, or trusts.
(ii) Stock held by domestic partnerships or S corporations.
(A) Rule when an election under paragraph (g) of this section is not in effect.
(B) Rules when an election under paragraph (g) of this section is in effect.
(2) Special rules for partners that own interests in domestic partnerships that own directly or indirectly stock of CFCs or QEFs.
(3) Special rules for S corporation shareholders that own interests in S corporations that own directly or indirectly stock of CFCs or QEFs.
(4) Special rules for participants in common trust funds.
(e) Conforming adjustments to modified adjusted gross income and adjusted gross income.
(1) Individuals.
(2) Estates and trusts.
(f) Application to estates and trusts.
(g) Election with respect to CFCs and QEFs.
(1) Effect of election.
(2) Years to which election applies.
(i) In general.
(ii) Termination of interest in CFC or QEF.
(iii) Termination of partnership.
(3) Who may make the election.
(4) Time and manner for making the election.
(i) Individuals, estates, and trusts.
(A) General rule.
(B) Special rule for charitable remainder trusts (CRTs).
(ii) Certain domestic passthrough entities.
(iii) Taxable years that begin before January 1, 2014.
(A) Individuals, estates, or trusts.
(B) Certain domestic passthrough entities.
(iv) Time for making election.
(h) Examples.
(i) Effective/applicability date.

[T.D. 9644, 78 FR 72422, Dec. 2, 2013, as amended at 79 FR 18160, Apr. 1, 2014]

§ 1.1411–1 General rules.

(a) *General rule.* Except as otherwise provided, all Internal Revenue Code (Code) provisions that apply for chapter 1 purposes in determining taxable income (as defined in section 63(a)) of a taxpayer also apply in determining the tax imposed by section 1411.

(b) *Adjusted gross income.* All references to an individual's adjusted gross income are treated as references to adjusted gross income as defined in section 62, and all references to an estate's or trust's adjusted gross income are treated as references to adjusted gross income as defined in section 67(e). However, there may be additional adjustments to adjusted gross income because of investments in controlled foreign corporations (CFCs) or passive foreign investment companies (PFICs). See § 1.1411–10(e).

(c) *Effect of section 1411 and the regulations thereunder for other purposes.* The inclusion or exclusion of items of income, gain, loss, or deduction in determining net investment income for purposes of section 1411, and the assignment of items of income, gain, loss, or deduction to a particular category of net investment income under section 1411(c)(1)(A), does not affect the treatment of any item of income, gain, loss, or deduction under any provision of the Code other than section 1411.

(d) *Definitions.* The following definitions apply for purposes of calculating net investment income under section 1411 and the regulations thereunder—

(1) The term *gross income from annuities* under section 1411(c)(1)(A) includes the amount received as an annuity under an annuity, endowment, or life insurance contract that is includible in gross income as a result of the application of section 72(a) and section 72(b), and an amount not received as an annuity under an annuity contract that is includible in gross income under section 72(e). In the case of a sale of an annuity, to the extent the sales price of the annuity does not exceed its surrender value, the gain recognized would be treated as gross income from an annuity within the meaning of section 1411(c)(1)(A)(i) and §1.1411–4(a)(1)(i). However, if the sales price of the annuity exceeds its surrender value, the seller would treat the gain equal to the difference between the basis in the annuity and the surrender value as gross income from an annuity described in section 1411(c)(1)(A)(i) and §1.1411–4(a)(1)(i) and the excess of the sales price over the surrender value as gain from the disposition of property included in section 1411(c)(1)(A)(iii) and §1.1411–4(a)(1)(iii). The term *gross income from annuities* does not include amounts paid in consideration for services rendered. For example, distributions from a foreign retirement plan that are paid in the form of an annuity and include investment income that was earned by the retirement plan does not constitute income from an annuity within the meaning of section 1411(c)(1)(A)(i).

(2) The term *controlled foreign corporation (CFC)* is as defined in section 953(c)(1)(B) or 957(a).

(3) The term *gross income from dividends* includes any item treated as a dividend for purposes of chapter 1. See also §1.1411–10 for additional amounts that constitute gross income from dividends. The term *gross income from dividends* includes, but is not limited to, amounts treated as dividends—

(i) Pursuant to subchapter C that are included in gross income (including constructive dividends);

(ii) Pursuant to section 1248(a), other than as provided in §1.1411–10;

(iii) Pursuant to §1.367(b)–2(e)(2);

(iv) Pursuant to section 1368(c)(2); and

(v) Substitute dividends that represent payments made to the transferor of a security in a securities lending transaction or a sale-repurchase transaction.

(4) The term *excluded income* means:

(i) Items of income excluded from gross income in chapter 1. For example, interest on state and local bonds excluded from gross income under section 103 and gain from the sale of a principal residence excluded from gross income under section 121.

(ii) Items of income not included in net investment income, as determined under §§1.1411–4 and 1.1411–10. For example, wages, unemployment compensation, Alaska Permanent Fund Dividends, alimony, and Social Security Benefits.

(iii) Items of gross income and net gain specifically excluded by section 1411, the regulations thereunder, or other guidance published in the Internal Revenue Bulletin. For example, gains from the disposition of property used in a trade of business not described in section 1411(c)(2) under §1.1411–4(d)(4)(i), distributions from certain Qualified Plans described in section 1411(c)(5) and §1.1411–8, income taken into account in determining self-employment income that is subject to tax under section 1401(b) described in section 1411(c)(6) and §1.1411–9, and section 951(a) inclusions from a CFC for which a §1.1411–10(g) election is not in effect.

(5) The term *individual* means any natural person.

(6) The term *gross income from interest* includes any item treated as interest income for purposes of chapter 1 and

substitute interest that represents payments made to the transferor of a security in a securities lending transaction or a sale-repurchase transaction.

(7) The term *married* and *married taxpayer* has the same meaning as in section 7703.

(8) The term *net investment income (NII)* means net investment income as defined in section 1411(c) and § 1.1411–4, as adjusted pursuant to the rules described in § 1.1411–10(c).

(9) The term *passive foreign investment company (PFIC)* is as defined in section 1297(a).

(10) The term *gross income from rents* includes amounts paid or to be paid principally for the use of (or the right to use) tangible property.

(11) The term *gross income from royalties* includes amounts received from mineral, oil, and gas royalties, and amounts received for the privilege of using patents, copyrights, secret processes and formulas, goodwill, trademarks, tradebrands, franchises, and other like property.

(12) The term *trade or business* refers to a trade or business within the meaning of section 162.

(13) The term *United States person* is as defined in section 7701(a)(30).

(14) The term *United States shareholder* is as defined in section 951(b).

(e) *Disallowance of certain credits against the section 1411 tax.* Amounts that may be credited against only the tax imposed by chapter 1 of the Code may not be credited against the section 1411 tax imposed by chapter 2A of the Code unless specifically provided in the Code. For example, the foreign income, war profits, and excess profits taxes that are allowed as a foreign tax credit by section 27(a), section 642(a), and section 901, respectively, are not allowed as a credit against the section 1411 tax.

(f) *Application to taxable years beginning before January 1, 2014*—(1) *Retroactive application of regulations.* Taxpayers that are subject to section 1411, and any other taxpayer to which these regulations may apply (such as partnerships and S corporations), may apply §§ 1.1411–1 through 1.1411–10 (including the ability to make any election(s) contained therein) in any taxable year that begins after December 31, 2012, but before January 1, 2014, for which the period of limitation under section 6501 has not expired.

(2) *Reliance and transitional rules.* For taxable years beginning before January 1, 2014, the Internal Revenue Service will not challenge a taxpayer's computation of tax under section 1411 if the taxpayer has made a reasonable, good faith effort to comply with the requirements of section 1411. For example, a taxpayer's compliance with the provisions of the proposed and final regulations under section 1411 (REG–130507–11 or REG–130843–13), generally, will be considered a reasonable, good faith effort to comply with the requirements of section 1411 if reliance on such regulation projects under section 1411 are applied in their entirety, and the taxpayer makes reasonable adjustments to ensure that their section 1411 tax liability in the taxable years beginning after December 31, 2013, is not inappropriately distorted by the positions taken in taxable years beginning after December 31, 2012, but before January 1, 2014. A similar rule applies to any other taxpayer to which these regulations may apply (such as partnerships and S corporations).

(g) *Effective/applicability date.* This section applies to taxable years beginning after December 31, 2013. However, taxpayers may apply this section to taxable years beginning after December 31, 2012, in accordance with paragraph (f) of this section.

[T.D. 9644, 78 FR 72424, Dec. 2, 2013]

§ 1.1411–2 Application to individuals.

(a) *Individual to whom tax applies*—(1) *In general.* Section 1411 applies to an individual who is a citizen or resident of the United States (within the meaning of section 7701(a)(30)(A)). Section 1411 does not apply to nonresident alien individuals (within the meaning of section 7701(b)(1)(B)). See paragraph (a)(2)(vi) of this section for special rules regarding bona fide residents of United States territories.

(2) *Special rules*—(i) *Dual resident individuals treated as residents of a foreign country under an income tax treaty.* A dual resident taxpayer (as defined in § 301.7701(b)–7(a)(1)) who determines that he or she is a resident of a foreign country for treaty purposes pursuant to an income tax treaty between the

United States and the foreign country and who claims benefits of the treaty as a nonresident of the United States will be treated as a nonresident alien of the United States for purposes of paragraph (a)(1) of this section.

(ii) *Dual-status resident aliens.* A dual-status individual who is a resident of the United States for a portion of a taxable year and a nonresident alien for the other portion of the taxable year will not be subject to section 1411 with respect to the portion of the year for which that individual is treated as a nonresident alien. The only income the individual must take into account for purposes of section 1411 is the income he or she receives during the portion of the year for which he or she is treated as a resident of the United States. The threshold amount under paragraph (d)(1) of this section applies.

(iii) *Joint returns in the case of a nonresident alien individual married to a United States citizen or resident*—(A) *Default treatment.* In the case of a United States citizen or resident who is married to a nonresident alien individual, the spouses will be treated as married filing separately for purposes of section 1411. For purposes of calculating the tax imposed under section 1411(a)(1), the United States citizen or resident spouse will be subject to the threshold amount for a married taxpayer filing a separate return in paragraph (d)(1)(ii) of this section, and the nonresident alien spouse will not be subject to tax under section 1411. In accordance with the rules for married individuals filing separate returns, the spouse that is a United States citizen or resident must determine his or her own net investment income and modified adjusted gross income.

(B) *Taxpayer election.* Married taxpayers who file a joint Federal income tax return pursuant to a section 6013(g) election for purposes of chapter 1 and chapter 24 also may elect to be treated as making a section 6013(g) election for purposes of chapter 2A (relating to the tax imposed by section 1411).

(*1*) *Effect of election.* For purposes of calculating the tax imposed under section 1411(a)(1), the effect of an election under section 6013(g) is to include the combined income of the United States citizen or resident spouse and the nonresident spouse in the section 1411(a)(1) calculation and to apply the threshold amount for a taxpayer making a joint return as set out in paragraph (d)(1)(i) of this section.

(*2*) *Procedural requirements for making election.* Taxpayers with a section 6013(g) election in effect for chapter 1 and chapter 24 purposes for any taxable year beginning after December 31, 2012, or taxpayers making a section 6013(g) election for chapter 1 and chapter 24 purposes in any taxable year beginning after December 31, 2012, who want to apply their section 6013(g) election for purposes of chapter 2A must make the election for the first taxable year beginning after December 31, 2013, in which the United States taxpayer is subject to tax under section 1411. The determination of whether the United States taxpayer is subject to tax under section 1411 is made without regard to the effect of the section 6013(g) election described in paragraph (a)(2)(iii)(B) of this section. The election, if made, must be made in the manner prescribed by forms, instructions, or in other guidance on an original or amended return for the taxable year for which the election is made. An election can be made on an amended return only if the taxable year for which the election is made, and all taxable years that are affected by the election, are not closed by the period of limitations on assessments under section 6501. Further, once made, the duration and termination of the section 6013(g) election for chapter 2A is governed by the rules of section 6013(g)(2) through (g)(6) and the regulations thereunder.

(*3*) *Ineffective elections.* In the event a taxpayer makes an election described in paragraph (a)(2)(iii)(B) of this section and subsequently determines that such taxpayer does not meet the criteria for making such election in such tax year described in paragraph (a)(2)(iii)(B)(*2*) of this section, then such original election will have no effect for that year and all future years. In such a case, the taxpayer should make appropriate adjustments to properly reflect the ineffective election. However, notwithstanding the previous sentence, if a taxpayer meets the criteria for the same election in a subsequent year, such taxpayer is deemed to

treat such original election as being made in that subsequent year unless the taxpayer files (or amends) the return for such subsequent year to report the taxpayer's net investment income tax without the original election. Furthermore, this paragraph (a)(2)(iii)(B)(*3*) shall not apply if a taxpayer does not meet the criteria described in paragraph (a)(2)(iii)(B)(*2*) of this section for making such election in such tax year solely as a result of the carryback of a net operating loss pursuant to section 172.

(iv) *Joint returns for a year in which nonresident alien married to a United States citizen or resident becomes a United States resident*—(A) *Default treatment*. In the case of a United States citizen or resident who is married to an individual who is a nonresident alien individual at the beginning of any taxable year, but is a United States resident at the close of such taxable year, each spouse will be treated as married filing separately for the entire year for purposes of section 1411. For purposes of calculating the tax imposed under section 1411(a)(1), each spouse will be subject to the threshold amount for a married taxpayer filing a separate return in paragraph (d)(1)(ii) of this section. The spouse who becomes a United States resident during the tax year will be subject to section 1411 only with respect to income received for the portion of the year for which he or she is treated as a United States resident. Each spouse must determine his or her own net investment income and modified adjusted gross income.

(B) *Taxpayer election*. Married taxpayers who file a joint Federal income tax return pursuant to a section 6013(h) election for purposes of chapter 1 and chapter 24 also may elect to be treated as making a section 6013(h) election for purposes of chapter 2A for such tax year.

(*1*) *Effect of election*. For purposes of calculating the tax imposed under section 1411(a)(1), the effect of an election under section 6013(h) is to include the combined income of the United States citizen or resident spouse and the dual-status resident spouse in the section 1411(a)(1) calculation and to apply the threshold amount for a taxpayer making a joint return as set out in paragraph (d)(1)(i) of this section.

(*2*) *Procedural requirements for making election*. Taxpayers who make a section 6013(h) election for purposes of chapter 1 and chapter 24 for any taxable year beginning after December 31, 2012, may elect to have their section 6013(h) election apply for purposes of chapter 2A. The election, if made, must be made in the manner prescribed by forms, instructions, or in other guidance on an original or amended return for the taxable year for which the election is made. An election can be made on an amended return only if the taxable year for which the election is made, and all taxable years that are affected by the election, are not closed by the period of limitations on assessments under section 6501. Further, in all cases, once made, the section 6013(h) election is governed by the rules of section 6013(h)(2) and the regulations thereunder.

(iv) *Grantor trusts*. For rules regarding the treatment of owners of grantor trusts, see §1.1411–3(b)(1)(v).

(v) *Bankruptcy estates*. A bankruptcy estate administered under chapter 7 (relating to liquidations) or chapter 11 (relating to reorganizations) of the Bankruptcy Code (Title 11 of the United States Code) of a debtor who is an individual is treated as a married taxpayer filing a separate return for purposes of section 1411. See §1.1411–2(d)(1)(ii).

(vi) *Bona fide residents of United States territories*—(A) *Applicability*. An individual who is a bona fide resident of a United States territory is subject to the tax imposed by section 1411(a)(1) only if the individual is required to file an income tax return with the United States upon application of section 931, 932, 933, or 935 and the regulations thereunder. With respect to an individual described in this paragraph (a)(2)(vi)(A), the amount excluded from gross income under section 931 or 933 and any deduction properly allocable or chargeable against amounts excluded from gross income under section 931 or 933, respectively, is not taken into account in computing modified adjusted gross income under paragraph

(c) of this section or net investment income (within the meaning of §1.1411–1(d)).

(B) *Coordination with exception for nonresident aliens.* An individual who is both a bona fide resident of a United States territory and a nonresident alien individual with respect to the United States is not subject to taxation under section 1411(a)(1).

(C) *Definitions.* For purposes of this section—

(*1*) *Bona fide resident.* The term *bona fide resident* has the meaning provided under section 937(a).

(*2*) *United States territory.* The term *United States territory* means American Samoa, Guam, the Northern Mariana Islands, Puerto Rico, or the United States Virgin Islands.

(b) *Calculation of tax*—(1) *In general.* In the case of an individual described in paragraph (a)(1) of this section, the tax imposed by section 1411(a)(1) for each taxable year is equal to 3.8 percent of the lesser of—

(i) Net investment income for such taxable year; or

(ii) The excess (if any) of—

(A) The modified adjusted gross income (as defined in paragraph (c) of this section) for such taxable year; over

(B) The threshold amount (as defined in paragraph (d) of this section).

(2) *Example.* During Year 1 (a year in which section 1411 is in effect), A, an unmarried United States citizen, has modified adjusted gross income (as defined in paragraph (c) of this section) of $190,000, which includes $50,000 of net investment income. A has a zero tax imposed under section 1411 because the threshold amount for a single individual is $200,000 (as provided in paragraph (d)(1)(iii) of this section). If during Year 2, A has modified adjusted gross income of $220,000, which includes $50,000 of net investment income, then the individual has a section 1411 tax of $760 (3.8% multiplied by $20,000, the lesser of $50,000 net investment income or $20,000 excess of modified adjusted gross income over the threshold amount).

(c) *Modified adjusted gross income*—(1) *General rule.* For purposes of section 1411, the term *modified adjusted gross income* means adjusted gross income increased by the excess of—

(i) The amount excluded from gross income under section 911(a)(1); over

(ii) The amount of any deductions (taken into account in computing adjusted gross income) or exclusions disallowed under section 911(d)(6) with respect to the amounts described in paragraph (c)(1)(i) of this section.

(2) *Rules with respect to CFCs and PFICs.* Additional rules in §1.1411–10(e)(1) apply to an individual that is a United States shareholder of a controlled foreign corporation (CFC) or that is a United States person that directly or indirectly owns an interest in a passive foreign investment company (PFIC).

(d) *Threshold amount*—(1) *In general.* The term *threshold amount* means—

(i) In the case of a taxpayer making a joint return under section 6013 or a surviving spouse (as defined in section 2(a)), $250,000;

(ii) In the case of a married taxpayer filing a separate return, $125,000; and

(iii) In the case of any other individual, $200,000.

(2) *Taxable year of less than twelve months*—(i) *General rule.* In the case of an individual who has a taxable year consisting of less than twelve months (short taxable year), the threshold amount under paragraph (d)(1) of this section is not reduced or prorated. For example, in the case of an unmarried decedent who dies on June 1, the threshold amount is $200,000 for the decedent's short taxable year that begins on January 1 and ends on June 1.

(ii) *Change of annual accounting period.* Notwithstanding paragraph (d)(2)(i) of this section, an individual who has a short taxable year resulting from a change of annual accounting period reduces the threshold amount to an amount that bears the same ratio to the full threshold amount provided under paragraph (d)(1) of this section as the number of months in the short taxable year bears to twelve.

(e) *Effective/applicability date.* This section applies to taxable years beginning after December 31, 2013. However, taxpayers may apply this section to

taxable years beginning after December 31, 2012, in accordance with § 1.1411–1(f).

[T.D. 9644, 78 FR 72424, Dec. 2, 2013, as amended at 79 FR 18160, Apr. 1, 2014]

§ 1.1411–3 Application to estates and trusts.

(a) *Estates and trusts to which tax applies*—(1) *In general*—(i) *General application*. Section 1411 and the regulations thereunder apply to all estates and trusts that are subject to the provisions of part I of subchapter J of chapter 1 of subtitle A of the Internal Revenue Code, unless specifically exempted under paragraph (b) of this section.

(ii) *Calculation of tax*. The tax imposed by section 1411(a)(2) for each taxable year is equal to 3.8 percent of the lesser of—

(A) The estate's or trust's undistributed net investment income for such taxable year; or

(B) The excess (if any) of—

(*1*) The estate's or trust's adjusted gross income (as defined in section 67(e) and as adjusted under § 1.1411–10(e)(2), if applicable) for such taxable year; over

(*2*) The dollar amount at which the highest tax bracket in section 1(e) begins for such taxable year.

(2) *Taxable year of less than twelve months*—(i) *General rule*. In the case of an estate or trust that has a taxable year consisting of less than twelve months (short taxable year), the dollar amount described in paragraph (a)(1)(ii)(B)(*2*) of this section is not reduced or prorated.

(ii) *Change of annual accounting period*. Notwithstanding paragraph (a)(2)(i) of this section, an estate or trust that has a short taxable year resulting from a change of annual accounting period (but not from an individual's death) reduces the dollar amount described in paragraph (a)(1)(ii)(B)(*2*) of this section to an amount that bears the same ratio to that dollar amount as the number of months in the short taxable year bears to twelve.

(3) *Rules with respect to CFCs and PFICs*. Additional rules in § 1.1411–10 apply to an estate or trust that holds an interest in a controlled foreign corporation (CFC) or a passive foreign investment company (PFIC).

(b) *Application to certain trusts and estates*—(1) *Exception for certain trusts and estates*. The following trusts are not subject to the tax imposed by section 1411:

(i) A trust or decedent's estate all of the unexpired interests in which are devoted to one or more of the purposes described in section 170(c)(2)(B).

(ii) A trust exempt from tax under section 501.

(iii) A charitable remainder trust described in section 664. However, see paragraph (d) of this section for special rules regarding the treatment of annuity or unitrust distributions from such a trust to persons subject to tax under section 1411.

(iv) Any other trust, fund, or account that is statutorily exempt from taxes imposed in subtitle A. For example, see sections 220(e)(1), 223(e)(1), 529(a), and 530(a).

(v) A trust, or a portion thereof, that is treated as a grantor trust under subpart E of part I of subchapter J of chapter 1. However, in the case of any such trust or portion thereof, each item of income or deduction that is included in computing taxable income of a grantor or another person under section 671 is treated as if it had been received by, or paid directly to, the grantor or other person for purposes of calculating such person's net investment income.

(vi) Electing Alaska Native Settlement Trusts subject to taxation under section 646.

(vii) Cemetery Perpetual Care Funds to which section 642(i) applies.

(viii) Foreign trusts (as defined in section 7701(a)(31)(B) and § 301.7701–7(a)(2)) (but see §§ 1.1411–3(e)(3)(ii) and 1.1411–4(e)(1)(ii) for rules related to distributions from foreign trusts to United States beneficiaries).

(ix) Foreign estates (as defined in section 7701(a)(31)(A)) (but see § 1.1411–3(e)(3)(ii) for rules related to distributions from foreign estates to United States beneficiaries).

(2) *Special rules for certain taxable trusts and estates*—(i) *Qualified funeral trusts*. For purposes of the calculation

of any tax imposed by section 1411, section 1411 and the regulations thereunder are applied to each qualified funeral trust (within the meaning of section 685) by treating each beneficiary's interest in each such trust as a separate trust.

(ii) *Bankruptcy estates*. A bankruptcy estate in which the debtor is an individual is treated as a married taxpayer filing a separate return for purposes of section 1411. See §1.1411–2(a)(2)(v) and (d)(1)(ii).

(c) *Application to electing small business trusts (ESBTs)*—(1) *General application*. The S portion and non-S portion (as defined in §1.641(c)–1(b)(2) and (3), respectively) of a trust that has made an ESBT election under section 1361(e)(3) and §1.1361–1(m)(2) are treated as separate trusts for purposes of the computation of undistributed net investment income in the manner described in paragraph (e) of this section, but are treated as a single trust for purposes of determining the amount subject to tax under section 1411. If a grantor or another person is treated as the owner of a portion of the ESBT, the items of income and deduction attributable to the grantor portion (as defined in §1.641(c)–1(b)(1)) are included in the grantor's calculation of net investment income and are not included in the ESBT's computation of tax described in paragraph (c)(1)(ii) of this section.

(2) *Computation of tax*. This paragraph (c)(2) provides the method for an ESBT to compute the tax under section 1411.

(i) *Step one*. The S portion and non-S portion computes each portion's undistributed net investment income as separate trusts in the manner described in paragraph (e) of this section and then combine these amounts to calculate the ESBT's undistributed net investment income.

(ii) *Step two*. The ESBT calculates its adjusted gross income (as defined in paragraph (a)(1)(ii)(B)(*1*) of this section). The ESBT's adjusted gross income is the adjusted gross income of the non-S portion, increased or decreased by the net income or net loss of the S portion, after taking into account all deductions, carryovers, and loss limitations applicable to the S portion, as a single item of ordinary income (or ordinary loss).

(iii) *Step three*. The ESBT pays tax on the lesser of—

(A) The ESBT's total undistributed net investment income; or

(B) The excess of the ESBT's adjusted gross income (as calculated in paragraph (c)(2)(ii) of this section) over the dollar amount at which the highest tax bracket in section 1(e) begins for the taxable year.

(3) *Example*. (i) In Year 1 (a year that section 1411 is in effect), the non-S portion of Trust, an ESBT, has dividend income of $15,000, interest income of $10,000, and capital loss of $5,000. Trust's S portion has net rental income of $21,000 and a capital gain of $7,000. The Trustee's annual fee of $1,000 is allocated 60% to the non-S portion and 40% to the S portion. Trust makes a distribution from income to a single beneficiary of $9,000.

(ii) *Step one*. (A) Trust must compute the undistributed net investment income for the S portion and non-S portion in the manner described in paragraph (c) of this section.

The undistributed net investment income for the S portion is $27,600 and is determined as follows:

Net Rental Income	$21,000
Capital Gain	7,000
Trustee Annual Fee	(400)
Total S portion undistributed net investment income	27,600

(B) The undistributed net investment income for the non-S portion is $12,400 and is determined as follows:

Dividend Income	$15,000
Interest Income	10,000
Deductible Capital Loss	(3,000)
Trustee Annual Fee	(600)
Distributable net income distribution	(9,000)
Total non-S portion undistributed net investment income	12,400

(C) Trust combines the undistributed net investment income of the S portion and non-S portion from (ii)(A) and (B) to arrive at Trust's combined undistributed net investment income.

S portion's undistributed net investment income	$27,600
Non-S portion's undistributed net investment income	12,400

Combined undistributed net investment income	40,000

(iii) *Step two*. (A) The ESBT calculates its adjusted gross income. Pursuant to paragraph (c)(2)(ii) of this section, the ESBT's adjusted gross income is the non-S portion's adjusted gross income increased or decreased by the net income or net loss of the S portion.

(B) The adjusted gross income for the ESBT is $40,000 and is determined as follows:

Dividend Income	$15,000
Interest Income	10,000
Deductible Capital Loss	(3,000)
Trustee Annual Fee	(600)
Distributable net income distribution	(9,000)
S Portion Income	27,600
Adjusted gross income	40,000

(C) The S portion's single item of ordinary income used in the ESBT's adjusted gross income calculation is $27,600. This item of income is determined by starting with net rental income of $21,000 and capital gain of $7,000 and reducing it by the S portion's $400 share of the annual trustee fee.

(iv) *Step three*. Trust pays tax on the lesser of—

(A) The combined undistributed net investment income ($40,000); or

(B) The excess of adjusted gross income ($40,000) over the dollar amount at which the highest tax bracket in section 1(e) applicable to a trust begins for the taxable year.

(d) *Application to charitable remainder trusts (CRTs)*—(1) *Operational rules*—(i) *Treatment of annuity or unitrust distributions*. If one or more items of net investment income comprise all or part of an annuity or unitrust distribution from a CRT, such items retain their character as net investment income in the hands of the recipient of that annuity or unitrust distribution.

(ii) *Apportionment among multiple beneficiaries*. In the case of a CRT with more than one annuity or unitrust beneficiary, the net investment income is apportioned among such beneficiaries based on their respective shares of the total annuity or unitrust amount paid by the CRT for that taxable year.

(iii) *Accumulated net investment income*. The accumulated net investment income of a CRT is the total amount of net investment income received by a CRT for all taxable years that begin after December 31, 2012, less the total amount of net investment income distributed for all prior taxable years of the trust that begin after December 31, 2012.

(2) *Application of Section 664*—(i) *General rule*. The Federal income tax rate of the item of net investment income, to be used to determine the proper classification of that item within the appropriate income category as described in §1.664–1(d)(1)(i)(b), is the sum of the income tax rate applicable to that item under chapter 1 and the tax rate under section 1411. Thus, the accumulated net investment income and excluded income (as defined in §1.1411–1(d)(4)) of a CRT in the same income category constitute separate classes of income within that category as described in §1.664–1(d)(1)(i)(b).

(ii) *Special rules for CRTs with income from CFCs or PFICs*. [Reserved]

(iii) *Examples*. The following examples illustrate the provisions of this paragraph (d)(2).

Example 1. (i) In 2009, A formed CRT as a charitable remainder annuity trust. The trust document requires an annual annuity payment of $50,000 to A for 15 years. For purposes of this example, assume that CRT is a valid charitable remainder trust under section 664 and has not received any unrelated business taxable income during any taxable year.

(ii) As of January 1, 2013, CRT has the following items of undistributed income within its §1.664–1(d)(1) categories and classes:

Category	Class	Tax rate (percent)	Amount
Ordinary Income	Interest	39.6	$4,000
	Net Rental Income	39.6	8,000
	Non-Qualified Dividend Income	39.6	2,000
	Qualified Dividend Income	20.0	10,000
Capital Gain	Short-Term	39.6	39,000
	Unrecaptured Section 1250 Gain	25.0	1,000
	Long-Term	20.0	560,000
Other Income			None

Category	Class	Tax rate (percent)	Amount
Total undistributed income as of January 1, 2013.			624,000

Pursuant to §1.1411–3(d)(1)(iii), none of the $624,000 of undistributed income is accumulated net investment income (ANII) because none of it was received by CRT after December 31, 2012. Thus, the entire $624,000 of undistributed income is excluded income (as defined in §1.1411–1(d)(4)).

(iii) During 2013, CRT receives $7,000 of interest income, $9,000 of qualified dividend income, $4,000 of short-term capital gain, and $11,000 of long-term capital gain. Prior to the 2013 distribution of $50,000 to A, CRT has the following items of undistributed income within its §1.664–1(d)(1) categories and classes after the application of paragraph (d)(2) of this section:

Category	Class	Excluded/ANII	Tax rate (percent)	Amount
Ordinary Income	Interest	NII	43.4	$7,000
	Interest	Excluded	39.6	4,000
	Net Rental Income	Excluded	39.6	8,000
	Non-Qualified Dividend Income	Excluded	39.6	2,000
	Qualified Dividend Income	NII	23.8	9,000
	Qualified Dividend Income	Excluded	20.0	10,000
Capital Gain	Short-Term	NII	43.4	4,000
	Short-Term	Excluded	39.6	39,000
	Unrecaptured Section 1250 Gain	Excluded	25.0	1,000
	Long-Term	NII	23.8	11,000
	Long-Term	Excluded	20.0	560,000
Other Income				None

(iv) The $50,000 distribution to A for 2013 will include the following amounts:

Category	Class	Excluded/ANII	Tax rate (percent)	Amount
Ordinary Income	Interest	NII	43.4	$7,000
	Interest	Excluded	39.6	4,000
	Net Rental Income	Excluded	39.6	8,000
	Non-Qualified Dividend Income	Excluded	39.6	2,000
	Qualified Dividend Income	NII	23.8	9,000
	Qualified Dividend Income	Excluded	20.0	10,000
Capital Gain	Short-Term	NII	43.4	4,000
	Short-Term	Excluded	39.6	6,000
	Unrecaptured Section 1250 Gain	Excluded	25.0	None
	Long-Term	NII	23.8	None
	Long-Term	Excluded	20.0	None

The amount included in A's 2013 net investment income is $20,000. This amount is comprised of $7,000 of interest income, $9,000 of qualified dividend income, and $4,000 of short-term capital gain.

(v) As a result, as of January 1, 2014, CRT has the following items of undistributed income within its §1.664–1(d)(1) categories and classes:

Category	Class	Excluded/ANII	Tax rate (percent)	Amount
Ordinary Income	Interest			None
	Net Rental Income			None
	Non-Qualified Dividend Income			None
	Qualified Dividend Income			None
Capital Gain	Short-Term	Excluded	39.6	$33,000
	Unrecaptured Section 1250 Gain	Excluded	25.0	1,000
	Long-Term	ANII	23.8	11,000
	Long-Term	Excluded	20.0	560,000
Other Income				None

Example 2. [Reserved]

(3) *Elective simplified method.* [Reserved]

(e) *Calculation of undistributed net investment income*—(1) *In general.* This paragraph (e) provides special rules for the computation of certain deductions and for the allocation of net investment income between an estate or trust and its beneficiaries. Generally, an estate's or trust's net investment income is calculated in the same manner as that of an individual. See § 1.1411–10(c) for special rules regarding CFCs, PFICs, and estates and trusts holding interests in such entities.

(2) *Undistributed net investment income.* An estate's or trust's undistributed net investment income is the estate's or trust's net investment income reduced by distributions of net investment income to beneficiaries and by deductions under section 642(c) in the manner described in paragraphs (e)(3) and (e)(4) of this section.

(3) *Distributions of net investment income to beneficiaries.* (i) In computing the estate's or trust's undistributed net investment income, net investment income is reduced by distributions of net investment income made to beneficiaries. The deduction allowed under this paragraph (e)(3) is limited to the lesser of the amount deductible to the estate or trust under section 651 or section 661, as applicable, or the net investment income of the estate or trust. In the case of a deduction under section 651 or section 661 that consists of both net investment income and excluded income (as defined in § 1.1411–1(d)(4)), the distribution must be allocated between net investment income and excluded income in a manner similar to § 1.661(b)–1 as if net investment income constituted gross income and excluded income constituted amounts not includible in gross income. See § 1.661(c)–1 and *Example 1* in paragraph (e)(5) of this section.

(ii) If one or more items of net investment income comprise all or part of a distribution for which a deduction is allowed under paragraph (e)(3)(i) of this section, such items retain their character as net investment income under section 652(b) or section 662(b), as applicable, for purposes of computing net investment income of the recipient of the distribution who is subject to tax under section 1411. The provisions of this paragraph (e)(3)(ii) also apply to distributions to United States beneficiaries of current year income described in section 652 or section 662, as applicable, from foreign estates and foreign nongrantor trusts.

(4) *Deduction for amounts paid or permanently set aside for a charitable purpose.* In computing the estate's or trust's undistributed net investment income, the estate or trust is allowed a deduction for amounts of net investment income that are allocated to amounts allowable under section 642(c). In the case of an estate or trust that has items of income consisting of both net investment income and excluded income, the allowable deduction under this paragraph (e)(4) must be allocated between net investment income and excluded income in accordance with § 1.642(c)–2(b) as if net investment income constituted gross income and excluded income constituted amounts not includible in gross income. For an estate or trust with deductions under both sections 642(c) and 661, see § 1.662(b)–2 and *Example 2* in paragraph (e)(5) of this section.

(5) *Examples.* The following examples illustrate the provisions of this paragraph (e). In each example, Year 1 is a year in which section 1411 is in effect and the taxpayer is not a foreign estate or trust:

Example 1. Calculation of undistributed net investment income (with no deduction under section 642(c)). (i) In Year 1, Trust has dividend income of $15,000, interest income of $10,000, capital gain of $5,000, and $75,000 of taxable income relating to a distribution from an individual retirement account (as defined under section 408). Trust has no expenses. Trust distributes $10,000 of its current year trust accounting income to A, a beneficiary of Trust.

(ii) Trust's distributable net income is $100,000 ($15,000 in dividends plus $10,000 in interest plus $75,000 of taxable income from an individual retirement account), from which the $10,000 distribution to A is paid. Trust's deduction under section 661 is $10,000. Under § 1.662(b)–1, the deduction reduces each class of income comprising distributable net income on a proportional basis. The $10,000 distribution equals 10% of distributable net income ($10,000 divided by $100,000). Therefore, the distribution consists of dividend income

of $1,500, interest income of $1,000, and ordinary income attributable to the individual retirement account of $7,500. Because the $5,000 of capital gain allocated to principal for trust accounting purposes did not enter into distributable net income, no portion of that amount is included in the $10,000 distribution, nor does it qualify for the deduction under section 661.

(iii) Trust's net investment income is $30,000 ($15,000 in dividends plus $10,000 in interest plus $5,000 in capital gain). Trust's $75,000 of taxable income attributable to the individual retirement account is excluded income under § 1.1411–1(d)(4). Trust's undistributed net investment income under paragraph (e)(2) of this section is $27,500, which is Trust's net investment income ($30,000) less the amount of dividend income ($1,500) and interest income ($1,000) distributed to A. The $27,500 of undistributed net investment income is comprised of the capital gain allocated to principal ($5,000), the remaining undistributed dividend income ($13,500), and the remaining undistributed interest income ($9,000).

(iv) Under paragraph (e)(3) of this section and pursuant to § 1.1411–4(a)(1), A's net investment income includes dividend income of $1,500 and interest income of $1,000, but does not include the $7,500 of ordinary income attributable to the individual retirement account because it is excluded from net investment income under § 1.1411–8.

Example 2. Calculation of undistributed net investment income (with deduction under section 642(c)). (i) Same facts as *Example 1*, except Trust is required to distribute $30,000 to A. In addition, Trust has a $10,000 deduction under section 642(c) (deduction for amounts paid for a charitable purpose). Trust also makes an additional discretionary distribution of $20,000 to B, a beneficiary of Trust. As in *Example 1*, Trust's net investment income is $30,000 ($15,000 in dividends plus $10,000 in interest plus $5,000 in capital gain). In accordance with §§ 1.661(b)–2 and 1.662(b)–2, the items of income must be allocated between the mandatory distribution to A, the discretionary distribution to B, and the $10,000 distribution to a charity.

(ii) For purposes of the mandatory distribution to A, Trust's distributable net income is $100,000. See § 1.662(b)–2, *Example* 1(b). Trust's deduction under section 661 for the distribution to A is $30,000. Under § 1.662(b)–1, the deduction reduces each class of income comprising distributable net income on a proportional basis. The $30,000 distribution equals 30% of distributable net income ($30,000 divided by $100,000). Therefore, the distribution consists of dividend income of $4,500, interest income of $3,000, and ordinary income attributable to the individual retirement account of $22,500. A's mandatory distribution thus consists of $7,500 of net investment income and $22,500 of excluded income.

(iii) Trust's remaining distributable net income is $70,000. Trust's remaining undistributed net investment income is $22,500. The $10,000 deduction under section 642(c) is allocated in the same manner as the distribution to A, where the $10,000 distribution equals 10% of distributable net income ($10,000 divided by $100,000). For purposes of determining undistributed net investment income, Trust's net investment income is reduced by $2,500 under paragraph (e)(4) of this section (dividend income of $1,500, interest income of $1,000, but with no reduction for amounts attributable to the individual retirement account of $7,500).

(iv) With respect to the discretionary distribution to B, Trust's remaining distributable net income is $60,000. Trust's remaining undistributed net investment income is $20,000. Trust's deduction under section 661 for the distribution to B is $20,000. The $20,000 distribution equals 20% of distributable net income ($20,000 divided by $100,000). Therefore, the distribution consists of dividend income of $3,000, interest income of $2,000, and ordinary income attributable to the individual retirement account of $15,000. B's distribution consists of $5,000 of net investment income and $15,000 of excluded income.

(v) Trust's undistributed net investment income is $15,000 after taking into account distribution deductions and section 642(c) in accordance with paragraphs (e)(3) and (e)(4) of this section, respectively. To arrive at Trust's undistributed net investment income of $15,000, Trust's net investment income of $30,000 is reduced by $7,500 of the mandatory distribution to A, $2,500 of the section 642(c) deduction, and $5,000 of the discretionary distribution to B. The undistributed net investment income consists of the remaining dividend income of $6,000 ($15,000 less $4,500 less $1,500 less $3,000), interest income of $4,000 ($10,000 less $1,000 less $3,000 less $2,000), and the $5,000 of undistributed capital gain.

Example 3. Fiscal Year Estate. (i) D died in 2011. D's estate (Estate) filed its first return that established its fiscal year ending October 31, 2011. During Estate's fiscal year ending October 31, 2013, it earned $10,000 of interest, $1,000 of dividends, and $15,000 of short-term gains. The Estate distributed its interest and dividends to S, D's spouse and sole beneficiary, on a quarterly basis; the last quarter's payment for that taxable year was made to S on December 5, 2013. Pursuant to § 1.662(c)–1, S is deemed to have received the first three payments for that taxable year, regardless of the actual payment dates, on October 31, 2013, the last day of Estate's taxable year. Estate makes a timely section 663(b) election to treat the fourth quarter distribution to S as having been made on October 31, 2013, the last day of Estate's preceding taxable year. Accordingly, S is

deemed to have received $10,000 of interest and $1,000 of dividends on October 31, 2013.

(ii) Because Estate's fiscal year ending October 31, 2013, began on November 1, 2012, the Estate is not subject to section 1411 on income received during that taxable year. Therefore, none of the income received by Estate during its fiscal year ending October 31, 2013, is net investment income. Pursuant to paragraph (e)(3)(ii) of this section, because none of the distributed interest or dividend income constituted net investment income to Estate, the $10,000 of interest and $1,000 of dividends that Estate distributed to S does not constitute net investment income to S.

(f) *Effective/applicability date.* This section applies to taxable years beginning after December 31, 2013, except that paragraph (d) of this section applies to taxable years of CRTs that begin after December 31, 2012. However, taxpayers other than CRTs may apply this section to taxable years beginning after December 31, 2012, in accordance with § 1.1411–1(f).

[T.D. 9644, 78 FR 72424, Dec. 2, 2013, as amended at 79 FR 18160, Apr. 1, 2014]

§ 1.1411–4 Definition of net investment income.

(a) *In general.* For purposes of section 1411 and the regulations thereunder, net investment income means the excess (if any) of—

(1) The sum of—

(i) Gross income from interest, dividends, annuities, royalties, and rents, except to the extent excluded by the ordinary course of a trade or business exception described in paragraph (b) of this section;

(ii) Other gross income derived from a trade or business described in § 1.1411–5; and

(iii) Net gain (to the extent taken into account in computing taxable income) attributable to the disposition of property, except to the extent excluded by the exception described in paragraph (d)(4)(i)(A) of this section for gain or loss attributable to property held in a trade or business not described in § 1.1411–5; over

(2) The deductions allowed by subtitle A that are properly allocable to such gross income or net gain (as determined in paragraph (f) of this section).

(b) *Ordinary course of a trade or business exception.* Gross income described in paragraph (a)(1)(i) of this section is excluded from net investment income if it is derived in the ordinary course of a trade or business not described in § 1.1411–5. See § 1.1411–6 for rules regarding working capital. To determine whether gross income described in paragraph (a)(1)(i) of this section is derived in a trade or business, the following rules apply.

(1) In the case of an individual, estate, or trust that owns or engages in a trade or business directly (or indirectly through ownership of an interest in an entity that is disregarded as an entity separate from its owner under § 301.7701–3), the determination of whether gross income described in paragraph (a)(1)(i) of this section is derived in a trade or business is made at the individual, estate, or trust level.

(2) In the case of an individual, estate, or trust that owns an interest in a passthrough entity (for example, a partnership or S corporation), and that entity is engaged in a trade or business, the determination of whether gross income described in paragraph (a)(1)(i) of this section is—

(i) Derived in a trade or business described in § 1.1411–5(a)(1) is made at the owner level; and

(ii) Derived in a trade or business described in § 1.1411–5(a)(2) is made at the entity level.

(3) The following examples illustrate the provisions of this paragraph (b). For purposes of these examples, assume that the taxpayer is a United States citizen, uses a calendar taxable year, and Year 1 and all subsequent years are taxable years in which section 1411 is in effect:

Example 1. Multiple passthrough entities. A, an individual, owns an interest in UTP, a partnership, which is engaged in a trade or business. UTP owns an interest in LTP, also a partnership, which is not engaged in a trade or business. LTP receives $10,000 in dividends, $5,000 of which is allocated to A through UTP. The $5,000 of dividends is not derived in a trade or business because LTP is not engaged in a trade or business. This is true even though UTP is engaged in a trade or business. Accordingly, the ordinary course of a trade or business exception described in paragraph (b) of this section does not apply, and A's $5,000 of dividends is net investment income under paragraph (a)(1)(i) of this section.

Example 2. Multiple passthrough entities. B, an individual, owns an interest in UTP2, a partnership, which is not engaged in a trade or business. UTP2 owns an interest in LTP2, also a partnership, which is engaged in a commercial lending trade or business. LTP2 is not engaged in a trade or business described in §1.1411–5(a)(2). LTP2's trade or business is not a passive activity (within the meaning of section 469) with respect to B. LTP2 earns $10,000 of interest income from its trade or business which is allocated to B through UTP2. Although UTP2 is not engaged in a trade or business, the $10,000 of interest income is derived in the ordinary course of LTP2's lending trade or business. Because LTP2 is not engaged in a trade or business described in §1.1411–5(a)(2) and because LTP2's trade or business is not a passive activity with respect to B (as described in §1.1411–5(a)(1)), the ordinary course of a trade or business exception described in paragraph (b) of this section applies, and B's $10,000 of interest is not included as net investment income under paragraph (a)(1)(i) of this section.

Example 3. Entity engaged in trading in financial instruments. C, an individual, owns an interest in PRS, a partnership, which is engaged in a trade or business of trading in financial instruments (as defined in §1.1411–5(a)(2)). PRS' trade or business is not a passive activity (within the meaning of section 469) with respect to C. In addition, C is not directly engaged in a trade or business of trading in financial instruments or commodities. PRS earns interest of $50,000, and C's distributive share of the interest is $25,000. Because PRS is engaged in a trade or business described in §1.1411–5(a)(2), the ordinary course of a trade or business exception described in paragraph (b) of this section does not apply, and C's $25,000 distributive share of the interest is net investment income under paragraph (a)(1)(i) of this section.

Example 4. Application of ordinary course of a trade or business exception. D, an individual, owns stock in S corporation, S. S is engaged in a banking trade or business (that is not a trade or business of trading in financial instruments or commodities), and S's trade or business is not a passive activity (within the meaning of section 469) with respect to D because D materially participates in the activity. S earns $100,000 of interest in the ordinary course of its trade or business, of which $5,000 is D's pro rata share. For purposes of paragraph (b) of this section, the interest income is derived in the ordinary course of S's banking business because it is not working capital under section 1411(c)(3) and §1.1411–6(a) (because it is considered to be derived in the ordinary course of a trade or business under the principles of §1.469–2T(c)(3)(ii)(A)). Because S is not engaged in a trade or business described in §1.1411–5(a)(2) and because S's trade or business is not a passive activity with respect to D (as described in §1.1411–5(a)(1)), the ordinary course of a trade or business exception described in paragraph (b) of this section applies, and D's $5,000 of interest is not included under paragraph (a)(1)(i) of this section.

(c) *Other gross income from a trade or business described in §1.1411–5.* For a trade or business described in §1.1411–5, paragraph (a)(1)(ii) of this section includes all other gross income (within the meaning of section 61) that is not gross income described in paragraph (a)(1)(i) of this section or net gain described in paragraph (a)(1)(iii) of this section.

(d) *Net gain.* This paragraph (d) describes special rules for purposes of paragraph (a)(1)(iii) of this section.

(1) *Definition of disposition.* For purposes of section 1411 and the regulations thereunder, the term *disposition* means a sale, exchange, transfer, conversion, cash settlement, cancellation, termination, lapse, expiration, or other disposition (including a deemed disposition, for example, under section 877A).

(2) *Limitation.* The calculation of net gain may not be less than zero. Losses allowable under section 1211(b) are permitted to offset gain from the disposition of assets other than capital assets that are subject to section 1411.

(3) *Net gain attributable to the disposition of property*—(i) *General rule.* Net gain attributable to the disposition of property is the gain described in section 61(a)(3) recognized from the disposition of property reduced, but not below zero, by losses deductible under section 165, including losses attributable to casualty, theft, and abandonment or other worthlessness. The rules in subchapter O of chapter 1 and the regulations thereunder apply. See, for example, §1.61–6(b). For purposes of this paragraph, net gain includes, but is not limited to, gain or loss attributable to the disposition of property from the investment of working capital (as defined in §1.1411–6); gain or loss attributable to the disposition of a life insurance contract; and gain attributable to the disposition of an annuity contract to the extent the sales price of the annuity exceeds the annuity's surrender value.

(ii) *Examples*. The following examples illustrate the provisions of this paragraph (d)(3). For purposes of these examples, assume that the taxpayer is a United States citizen, uses a calendar taxable year, and Year 1 and all subsequent years are taxable years in which section 1411 is in effect:

Example 1. Calculation of net gain. (i) In Year 1, A, an unmarried individual, realizes a capital loss of $40,000 on the sale of P stock and realizes a capital gain of $10,000 on the sale of Q stock, resulting in a net capital loss of $30,000. Both P and Q are C corporations. A has no other capital gain or capital loss in Year 1. In addition, A receives wages of $300,000 and earns $5,000 of gross income from interest. For income tax purposes, under section 1211(b), A may use $3,000 of the net capital loss against other income. Under section 1212(b)(1), the remaining $27,000 is a capital loss carryover. For purposes of determining A's Year 1 net gain under paragraph (a)(1)(iii) of this section, A's gain of $10,000 on the sale of the Q stock is reduced by A's loss of $40,000 on the sale of the P stock. In addition, A may reduce net investment income by the $3,000 of the excess of capital losses over capital gains allowed for income tax purposes under section 1211(b).

(ii) In Year 2, A has a capital gain of $30,000 on the sale of Y stock. Y is a C corporation. A has no other capital gain or capital loss in Year 2. For income tax purposes, A may reduce the $30,000 gain by the Year 1 section 1212(b) $27,000 capital loss carryover. For purposes of determining A's Year 2 net gain under paragraph (a)(1)(iii) of this section, A's $30,000 gain may also be reduced by the $27,000 capital loss carryover from Year 1. Therefore, in Year 2, A has $3,000 of net gain for purposes of paragraph (a)(1)(iii) of this section.

Example 2. Calculation of net gain. The facts are the same as in *Example 1*, except that in Year 1, A also realizes a gain of $20,000 on the sale of Rental Property D, all of which is treated as ordinary income under section 1250. For income tax purposes, under section 1211(b), A may use $3,000 of the net capital loss against other income. Under section 1212(b)(1) the remaining $27,000 is a capital loss carryover. For purposes of determining A's net gain under paragraph (a)(1)(iii) of this section, A's gain of $10,000 on the sale of the Q stock is reduced by A's loss of $40,000 on the sale of the P stock. A's $20,000 gain on the sale of Rental Property D is reduced to the extent of the $3,000 loss allowed under section 1211(b). Therefore, A's net gain for Year 1 is $17,000 ($20,000 gain treated as ordinary income on the sale of Rental Property D reduced by $3,000 loss allowed under section 1211).

Example 3. Section 121(a) exclusion. (i) In Year 1, A, an unmarried individual, sells a house that A has owned and used as A's principal residence for the five years preceding the sale and realizes $200,000 in gain. In addition to the gain realized from the sale of A's principal residence, A also realizes $7,000 in long-term capital gain. A has a $5,000 short-term capital loss carryover from a year preceding the effective date of section 1411.

(ii) For income tax purposes, under section 121(a), A excludes the $200,000 gain realized from the sale of A's principal residence from A's Year 1 gross income. In determining A's Year 1 adjusted gross income, A also reduces the $7,000 capital gain by the $5,000 capital loss carryover allowed under section 1211(b).

(iii) For section 1411 purposes, under section 121(a), A excludes the $200,000 gain realized from the sale of A's principal residence from A's Year 1 gross income and, consequently, from A's net investment income. In determining A's Year 1 net gain under paragraph (a)(1)(iii) of this section, A reduces the $7,000 capital gain by the $5,000 capital loss carryover allowed under section 1211(b).

Example 4. Section 1031 like-kind exchange. (i) In Year 1, A, an unmarried individual who is not a dealer in real estate, purchases Greenacre, a piece of undeveloped land, for $10,000. A intends to hold Greenacre for investment.

(ii) In Year 3, A enters into an exchange in which A transfers Greenacre, now valued at $20,000, and $5,000 cash for Blackacre, another piece of undeveloped land, which has a fair market value of $25,000. The exchange is a transaction for which no gain or loss is recognized under section 1031.

(iii) In Year 3, for income tax purposes, A does not recognize any gain from the exchange of Greenacre for Blackacre. A's basis in Blackacre is $15,000 ($10,000 substituted basis in Greenacre plus $5,000 additional cost of acquisition). For purposes of section 1411, A's net investment income for Year 3 does not include any realized gain from the exchange of Greenacre for Blackacre.

(iv) In Year 5, A sells Blackacre to an unrelated party for $35,000 in cash.

(v) In Year 5, for income tax purposes, A recognizes capital gain of $20,000 ($35,000 sale price minus $15,000 basis). For purposes of section 1411, A's net investment income includes the $20,000 gain recognized from the sale of Blackacre.

(4) *Gains and losses excluded from net investment income*—(i) *Exception for gain or loss attributable to property held in a trade or business not described in § 1.1411–5*—(A) *General rule.* Net gain does not include gain or loss attributable to property (other than property from the

investment of working capital (as described in § 1.1411–6)) held in a trade or business not described in § 1.1411–5.

(B) *Special rules for determining whether property is held in a trade or business.* To determine whether net gain described in paragraph (a)(1)(iii) of this section is from property held in a trade or business—

(*1*) A partnership interest or S corporation stock generally is not property held in a trade or business. Therefore, gain from the sale of a partnership interest or S corporation stock is generally gain described in paragraph (a)(1)(iii) of this section. However, net gain does not include certain gain or loss attributable to the disposition of certain interests in partnerships and S corporations as provided in § 1.1411–7.

(*2*) In the case of an individual, estate, or trust that owns or engages in a trade or business directly (or indirectly through ownership of an interest in an entity that is disregarded as an entity separate from its owner under § 301.7701–3), the determination of whether net gain described in paragraph (a)(1)(iii) of this section is attributable to property held in a trade or business is made at the individual, estate, or trust level.

(*3*) In the case of an individual, estate, or trust that owns an interest in a passthrough entity (for example, a partnership or S corporation), and that entity is engaged in a trade or business, the determination of whether net gain described in paragraph (a)(1)(iii) of this section from such entity is attributable to—

(*i*) Property held in a trade or business described in § 1.1411–5(a)(1) is made at the owner level; and

(*ii*) Property held in a trade or business described in § 1.1411–5(a)(2) is made at the entity level.

(C) *Examples.* The following examples illustrate the provisions of this paragraph (d)(4)(i). For purposes of these examples, assume the taxpayer is a United States citizen, uses a calendar taxable year, and Year 1 and all subsequent years are taxable years in which section 1411 is in effect:

Example 1. Gain from rental activity. A, an unmarried individual, rents a boat to B for $100,000 in Year 1. A's rental activity does not involve the conduct of a section 162 trade or business, and under section 469(c)(2), A's rental activity is a passive activity. In Year 2, A sells the boat to B, and A realizes and recognizes taxable gain attributable to the disposition of the boat of $500,000. Because the exception provided in paragraph (d)(4)(i)(A) of this section requires a trade or business, this exception is inapplicable, and therefore, A's $500,000 gain will be taken into account under § 1.1411–4(a)(1)(iii).

Example 2. Installment sale. (i) PRS, a partnership for Federal income tax purposes, operates an automobile dealership. Therefore, with respect to B and C, PRS is not a trade or business described in section 1411(c)(2) and § 1.1411–5. D owns the remaining 20% of PRS. Assume, for purposes of this example, that PRS is a passive activity with respect to D, and therefore is a trade or business described in section 1411(c)(2)(A) and § 1.1411–5(a)(1).

(ii)(A) In Year 0, a year preceding the effective date of section 1411, PRS relocates its dealership to a larger location. As a result of the relocation, PRS sells its old dealership facility to a real estate developer in exchange for $1,000,000 cash and a $4,500,000 promissory note, fully amortizing over the subsequent 15 years, and bearing adequate stated interest. PRS reports the sale transaction under section 453. PRS's adjusted tax basis in the old dealership facility is $1,075,000. Assume for purposes of this example that PRS has $300,000 of recapture income (within the meaning of section 453(i)); the buyer is not related to PRS, B, C, or D; and the buyer is not assuming any liabilities of PRS in the transaction.

(B) For chapter 1 purposes, PRS has realized gain on the transaction of $4,425,000 ($5,500,000 less $1,075,000). Pursuant to section 453(i), PRS will take into account $300,000 of the recapture income in Year 0, and the gain in excess of the recapture income ($4,125,000) will be taken into account under the installment method. For purposes of section 453, PRS's profit percentage is 75% ($4,125,000 gain divided by $5,500,000 gross selling price). In Year 0, PRS will take into account $750,000 of capital gain attributable to the $1,000,000 cash payment. In the subsequent 15 years, PRS will receive annual payments of $300,000 (plus interest). Each payment will result in PRS recognizing $225,000 of capital gain (75% of $300,000).

(iii)(A) In Year 1, PRS receives a payment of $300,000 plus the applicable amount of interest. For purposes of chapter 1, PRS recognizes $225,000 of capital gain. B and C's distributive share of the gain is $90,000 each and D's distributive share of the gain is $45,000.

(B) The old dealership facility constituted property held in PRS's trade or business. In the case of section 453 installment sales, section 453 governs the timing of the gain recognition, but does not alter the character of the gain. See § 1.1411–1(a). The determination of whether the gain is attributable to the

disposition of property used in a trade or business described in paragraph (d)(4)(i) of this section constitutes an element of the gain's character for Federal tax purposes. As a result, the applicability of paragraph (d)(4)(i) of this section is determined in Year 0 and applies to all gain received on the promissory note during the 15 year payment period. This result is consistent with the section 469 determination of the passive or nonpassive classification of the gain under § 1.469–2T(c)(2)(i)(A).

(C) In the case of D, PRS's trade or business is described in section 1411(c)(2)(A) and § 1.1411–5(a)(1). Therefore, the exclusion in paragraph (d)(4)(i) of this section does not apply, and D must include the $45,000 of gain in D's net investment income.

(D) In the case of B and C, PRS's trade or business is not described in section 1411(c)(2) or § 1.1411–5. Therefore, B and C exclude the $90,000 gain from net investment income pursuant to paragraph (d)(4)(i) of this section.

(iv) In Year 2, C dies and C's 40% interest in PRS passes to Estate.

(v)(A) In Year 3, PRS receives a payment of $300,000 plus the applicable amount of interest. For purposes of chapter 1, PRS recognizes $225,000 of capital gain. B and Estate each have a distributive share of the gain equal to $90,000 and D's distributive share of the gain is $45,000.

(B) The calculation of net investment income for B and D in Year 3 is the same as in (iii) for Year 1.

(C) In the case of Estate, the distributive share of the $90,000 gain constitutes income in respect of a decedent (IRD) under section 691(a)(4) and subchapter K. See § 1.1411–1(a). Assume that Estate paid estate taxes of $5,000 that were attributable to the $90,000 of IRD. Pursuant to section 691(c)(4), the amount of gain taken into account in computing Estate's taxable income in Year 3 is $85,000 ($90,000 reduced by the $5,000 of allocable estate taxes). Pursuant to section 691(a)(3) and § 1.691(a)–3(a), the character of the gain to the Estate is the same character as the gain would have been if C had survived to receive it. Although the amount of taxable gain for chapter 1 has been reduced, the remaining $85,000 retains its character attributable to the disposition of property used in a trade or business described in paragraph (d)(4)(i) of this section. Therefore, Estate may exclude the $85,000 gain from net investment income pursuant to paragraph (d)(4)(i) of this section.

(ii) *Other gains and losses excluded from net investment income.* Net gain, as determined under paragraph (d) of this section, does not include gains and losses excluded from net investment income by any other provision in §§ 1.1411–1 through 1.1411–10. For example, see § 1.1411–7 (certain gain or loss attributable to the disposition of certain interests in partnerships and S corporations) and § 1.1411–8(b)(4)(ii) (net unrealized appreciation attributable to employer securities realized on a disposition of those employer securities).

(iii) *Adjustment for capital loss carryforwards for previously excluded income.* [Reserved]

(e) *Net investment income attributable to certain entities*—(1) *Distributions from estates and trusts*—(i) *In general.* Net investment income includes a beneficiary's share of distributable net income, as described in sections 652(a) and 662(a), to the extent that, under sections 652(b) and 662(b), the character of such income constitutes gross income from items described in paragraphs (a)(1)(i) and (ii) of this section or net gain attributable to items described in paragraph (a)(1)(iii) of this section, with further computations consistent with the principles of this section, as provided in § 1.1411–3(e).

(ii) *Distributions of accumulated net investment income from foreign nongrantor trusts to United States beneficiaries.* [Reserved]

(2) *CFCs and PFICs.* For purposes of calculating net investment income, additional rules in § 1.1411–10(c) apply to an individual, an estate, or a trust that is a United States shareholder that owns an interest in a controlled foreign corporation (CFC) or that is a United States person that directly or indirectly owns an interest in a passive foreign investment company (PFIC).

(3) *Treatment of income from common trust funds.* [Reserved]

(f) *Properly allocable deductions*—(1) *General rule*—(i) *In general.* Unless provided elsewhere in §§ 1.1411–1 through 1.1411–10, only properly allocable deductions described in this paragraph (f) may be taken into account in determining net investment income.

(ii) *Limitations.* Any deductions described in this paragraph (f) in excess of gross income and net gain described in section 1411(c)(1)(A) are not taken into account in determining net investment income in any other taxable year, except as allowed under chapter 1.

(2) *Properly allocable deductions described in section 62*—(i) *Deductions allocable to gross income from rents and royalties.* Deductions described in section 62(a)(4) allocable to rents and royalties described in paragraph (a)(1)(i) of this section are taken into account in determining net investment income.

(ii) *Deductions allocable to gross income from trades or businesses described in § 1.1411–5.* Deductions described in section 62(a)(1) allocable to income from a trade or business described in § 1.1411–5 are taken into account in determining net investment income to the extent the deductions have not been taken into account in determining self-employment income within the meaning of § 1.1411–9.

(iii) *Penalty on early withdrawal of savings.* Deductions described in section 62(a)(9) are taken into account in determining net investment income.

(iv) *Net operating loss.* The total section 1411 NOL amount of a net operating loss deduction allowed under section 172 is allowed as a properly allocable deduction in determining net investment income for any taxable year. See paragraph (h) of this section for the calculation of the total section 1411 NOL amount of a net operating loss deduction.

(v) *Examples.* The following examples illustrate the provisions of this paragraph (f)(2). For purposes of these examples, assume the taxpayer is a United States citizen, uses a calendar taxable year, and Year 1 and all subsequent years are taxable years in which section 1411 is in effect:

Example 1. (i) A, an individual, is a 40% shareholder in SCo, an S corporation. SCo is engaged in a trade or business described in section 1411(c)(2)(A). SCo is the only passive activity owned by A. In Year 1, SCo reported a loss of $11,000 to A which was comprised of gross operating income of $29,000 and operating deductions of $40,000. A's at risk amount at the beginning of Year 1 is $7,000. There were no other events that affected A's at risk amount in Year 1.

(ii) For purposes of calculating A's net investment income, A's $29,000 distributive share of SCo's gross operating income is income within the meaning of section 1411(c)(1)(A)(ii).

(iii) As a result of A's at risk limitation, for chapter 1 purposes, A may only deduct $7,000 of the operating deductions in excess of the gross operating income. The remaining $4,000 deductions are suspended because A's amount at risk at the end of Year 1 is zero.

(iv) For purposes of section 469, A has passive activity gross income of $29,000 and passive activity deductions of $36,000 ($40,000 of operating deductions allocable to A less $4,000 suspended under section 465). Because A has no other passive activity income from any other source, section 469 limits A's passive activity deductions to A's passive activity gross income. As a result, section 469 allows A to deduct $29,000 of SCo's operating deductionsand suspends the remaining $7,000.

(v) For purposes of calculating A's net investment income, A has $29,000 of properly allocable deductions allowed by section 1411(c)(1)(B) and paragraph (f)(2)(ii) of this section.

Example 2. (i) Same facts as *Example 1.* In Year 2, SCo reported net income of $13,000 to A, which was comprised of gross operating income of $43,000 and operating deductions of $30,000. There were no other events that affected A's at risk amount in Year 2.

(ii) For purposes of calculating A's net investment income, A's $43,000 distributive share of gross operating income is income within the meaning of section 1411(c)(1)(A)(ii).

(iii) Pursuant to section 465(a)(2), A's deductions attributable to the gross income of SCo include the $30,000 deduction allocable to A in Year 2 plus the $4,000 loss that was suspended and carried over to Year 2 from Year 1 pursuant to section 465(a)(2). Under section 465(a)(2), the $4,000 of losses from Year 1 are treated as deductions from the activity in Year 2. As a result, A's net operating income from SCo in Year 2 is $9,000 ($43,000 − $30,000 − $4,000) in Year 2. A's amount at risk at the end of Year 2 is $9,000.

(iv) For purposes of section 469, A has passive activity gross income of $43,000. A's passive activity deductions attributable to SCo are the sum of the Year 2 operating deductions allocable to A from S ($30,000), deductions formerly suspended by section 465 ($4,000), and passive activity losses suspended by section 469 ($7,000). Therefore, in Year 2, A has passive activity deductions of $41,000. Because A's passive activity gross income exceeds A's passive activity deductions, section 469 does not limit any of the deductions in Year 2. At the end of Year 2, A has no suspended passive activity losses.

(v) Although A's distributive share of Year 2 deductions allocable to SCo's operating income was $30,000; the operative provisions of sections 465 and 469 do not change the character of the deductions when such amounts are suspended under either section. Furthermore, section 465(a)(2) and §§ 1.469–1(f)(4) and 1.469–2T(d)(1) treat amounts suspended from prior years as deductions in the current year. See § 1.1411–1(a). Therefore, for purposes of calculating A's net investment income, A

has $41,000 of properly allocable deductions allowed by section 1411(c)(1)(B) and paragraph (f)(2)(ii) of this section.

(3) *Properly allocable deductions described in section 63(d).* In determining net investment income, the following itemized deductions are taken into account:

(i) *Investment interest expense.* Investment interest (as defined in section 163(d)(3)) to the extent allowed under section 163(d)(1). Any investment interest not allowed under section 163(d)(1) is treated as investment interest paid or accrued by the taxpayer in the succeeding taxable year. The following example illustrates the provisions of this paragraph. For purposes of this example, assume that the taxpayer uses a calendar taxable year, and Year 1 and all subsequent years are taxable years in which section 1411 is in effect:

(A) In Year 1, A, an unmarried individual, pays interest of $4,000 on debt incurred to purchase stock. Under § 1.163–8T, this interest is allocable to the stock and is investment interest within the meaning of section 163(d)(3). A has no investment income as defined by section 163(d)(4). A has $10,000 of income from a trade or business that is a passive activity (as defined in § 1.1411–5(a)(1)) with respect to A. For income tax purposes, under section 163(d)(1), A may not deduct the $4,000 investment interest in Year 1 because A does not have any section 163(d)(4) net investment income. Under section 163(d)(2), the $4,000 investment interest is a carryforward of disallowed interest that is treated as investment interest paid by A in the succeeding taxable year. Similarly, for purposes of determining A's Year 1 net investment income, A may not deduct the $4,000 investment interest.

(B) In Year 2, A has $5,000 of section 163(d)(4) net investment income. For both income tax purposes and for determining section 1411 net investment income, A's $4,000 carryforward of interest expense disallowed in Year 1 may be deducted in Year 2.

(ii) *Investment expenses.* Investment expenses (as defined in section 163(d)(4)(C)).

(iii) *Taxes described in section 164(a)(3).* State, local, and foreign income, war profits, and excess profit taxes described in section 164(a)(3) that are allocable to net investment income pursuant to paragraph (g)(1) of this section. Except to the extent specifically expected from section 275(a)(4), foreign income, war profits, and excess profit taxes are not allowed as deductions under section 164(a)(3) in determining net investment income if the taxpayer claims the benefit of the foreign tax credit under section 901 with respect to the same taxable year. For rules applicable to refunds of taxes described in this paragraph, see paragraph (g)(2) of this section.

(iv) *Items described in section 72(b)(3).* In the case of an amount allowed as a deduction to the annuitant for the annuitant's last taxable year under section 72(b)(3), such amount is allowed as a properly allocable deduction in the same taxable year if the income from the annuity (had the annuitant lived to receive such income) would have been included in net investment income under paragraph (a)(1)(i) of this section (and not excluded from net investment income by reason of § 1.1411–8).

(v) *Items described in section 691(c).* Deductions for estate and generation-skipping taxes allowed by section 691(c) that are allocable to net investment income; provided, however, that any portion of the section 691(c) deduction described in section 691(c)(4) is taken into account instead in computing net gain under paragraph (d) and not under this paragraph (f)(3)(v).

(vi) *Items described in section 212(3).* Amounts described in section 212(3) and § 1.212–1(l) to the extent they are allocable to net investment income pursuant to paragraph (g)(1) of this section.

(vii) *Amortizable bond premium.* A deduction allowed under section 171(a)(1) for the amortizable bond premium on a taxable bond (for example, see § 1.171–2(a)(4)(i)(C) for the treatment of a bond premium carryforward as a deduction under section 171(a)(1)).

(viii) *Fiduciary expenses.* In the case of an estate or trust, amounts described in § 1.212–1(i) to the extent they are allocable to net investment income pursuant to paragraph (g)(1) of this section.

(4) *Loss deductions*—(i) *General rule.* Losses described in section 165, whether described in section 62 or section

63(d), are allowed as properly allocable deductions to the extent such losses exceed the amount of gain described in section 61(a)(3) and are not taken into account in computing net gain by reason of paragraph (d) of this section.

(ii) *Examples*. The following examples illustrate the provisions of this paragraph (f)(4). For purposes of these examples, assume the taxpayer is a United States citizen, uses a calendar taxable year, and Year 1 and all subsequent years are taxable years in which section 1411 is in effect:

Example 1. (i) A, an unmarried individual, owns an interest in PRS, a partnership for Federal income tax purposes. PRS is engaged in a trading business described in section 1411(c)(2)(B) and § 1.1411–5(a)(2) and has made a valid and timely election under section 475(f)(2). A's distributive share from PRS in Year 1 consists of $125,000 of interest and dividends and $60,000 of ordinary losses from the trading business. In addition to A's investment in PRS, A sold undeveloped land in Year 1 for a long-term capital gain of $50,000. A has no capital losses carried over from a preceding year.

(ii) For purposes of chapter 1, A includes the $125,000 of interest and dividends, $60,000 of ordinary loss, and $50,000 of long-term capital gain in the computation of A's adjusted gross income.

(iii) For purposes of calculating net investment income, A includes the $125,000 of interest and dividends. Pursuant to paragraph (d) of this section, A takes into account the $60,000 at ordinary loss from PRS and the $50,000 of long term capital gain in the computation of A's net gain. A's losses ($60,000) exceed A's gains ($50,000). Therefore, A's net gain under paragraph (d) of this section is zero. Additionally, A is allowed a deduction under paragraph (f)(4)(i) of this section for $10,000 (the amount of ordinary losses that were allowable under chapter 1 in excess of the amounts taken into account in computing net gain). A's net investment income in Year 1 is $115,000.

Example 2. (i) In Year 1, T, a nongrantor trust, incurs a capital loss of $5,000 on the sale of publicly traded stocks. In addition, T receives $17,000 of interest and dividend income. T has no capital losses carried over from a preceding year.

(ii) For purposes of chapter 1, T includes the $17,000 of interest and dividends and only $3,000 of the capital loss in the computation of adjusted gross income. The remaining $2,000 capital loss is carried over to Year 2.

(iii) For purposes of calculating net investment income, T includes the $17,000 of interest and dividends in net investment income. Pursuant to paragraph (d) of this section, T takes into account the $3,000 capital loss allowed by chapter 1. T's losses ($3,000) exceed T's gains ($0). Therefore, T's net gain under paragraph (d) of this section is zero. However, T is allowed a deduction under paragraph (f)(4)(i) of this section for $3,000 (the amount of losses that were allowable under chapter 1 in excess of the amounts taken into account in computing net gain). T's net investment income in Year 1 is $14,000.

Example 3. (i) In Year 1, B, an unmarried individual, incurs a short-term capital loss of $15,000 on the sale of publicly traded stocks. B also receives annuity income of $50,000. In addition, B disposes of property used in his sole proprietorship (which is not a trade or business described in section 1411(c)(2) or § 1.1411–5(a) for a gain of $21,000. Pursuant to section 1231, the gain of $21,000 is treated as a long-term capital gain for purposes of chapter 1. B has no capital losses carried over from a preceding year.

(ii) For purposes of chapter 1, B includes the $50,000 of annuity income in the computation of adjusted gross income. The $21,000 long-term capital gain is offset by the $15,000 short-term capital loss, so B includes $6,000 of net long-term capital gain in the computation of adjusted gross income.

(iii) For purposes of calculating net investment income, B includes the $50,000 of annuity income in net investment income. Pursuant to paragraph (d)(4)(i) of this section, B's net gain does not include the $21,000 long-term capital gain because it is attributable to property held in B's sole proprietorship (a nonpassive activity). Pursuant to paragraph (d) of this section, T takes into account the $15,000 capital loss allowed by chapter 1. B's losses ($15,000) exceed B's gains ($0). Therefore, A's net gain under paragraph (d) of this section is zero. However, B is allowed a deduction under paragraph (f)(4)(i) of this section for $15,000 (the amount of losses that were allowable under chapter 1 in excess of the amounts taken into account in computing net gain). B's net investment income in Year 1 is $35,000.

(5) *Ordinary loss deductions for certain debt instruments*. An amount treated as an ordinary loss by a holder of a contingent payment debt instrument under § 1.1275–4(b) or an inflation-indexed debt instrument under § 1.1275–7(f)(1).

(6) *Other deductions*. Any other deduction allowed by subtitle A that is identified in published guidance in the FEDERAL REGISTER or in the Internal Revenue Bulletin (see § 601.601(d)(2)(ii)(*b*) of this chapter) as properly allocable to gross income or net gain under this section.

(7) *Application of limitations under sections 67 and 68.* Any deductions described in this paragraph (f) that are subject to section 67 (the 2-percent floor on miscellaneous itemized deductions) or section 68 (the overall limitation on itemized deductions) are allowed in determining net investment income only to the extent the items are deductible for chapter 1 purposes after the application of sections 67 and 68. For this purpose, section 67 applies before section 68. The amount of deductions subject to sections 67 and 68 that may be deducted in determining net investment income after the application of sections 67 and 68 is determined as described in paragraph (f)(7)(i) and (f)(7)(ii) of this section.

(i) *Deductions subject to section 67.* The amount of miscellaneous itemized deductions (as defined in section 67(b)) tentatively deductible in determining net investment income after applying section 67 (but before applying section 68) is the lesser of:

(A) The portion of the taxpayer's miscellaneous itemized deductions (before the application of section 67) that is properly allocable to items of income or net gain included in determining net investment income, or

(B) The taxpayer's total miscellaneous itemized deductions allowed after the application of section 67, but before the application of section 68.

(ii) *Deductions subject to section 68.* The amount of itemized deductions allowed in determining net investment income after applying sections 67 and 68 is the lesser of:

(A) The sum of the amount determined under paragraph (f)(7)(i) of this section and the amount of itemized deductions not subject to section 67 that are properly allocable to items of income or net gain included in determining net investment income, or

(B) The total amount of itemized deductions allowed after the application of sections 67 and 68.

(iii) *Itemized deductions.* For purposes of paragraph (f)(7)(ii), itemized deductions do not include any deduction described in section 68(c).

(iv) *Example.* The following example illustrates the provisions of this paragraph (f)(7). For purposes of these examples, assume the taxpayer is a United States citizen, uses a calendar taxable year, and Year 1 and all subsequent years are taxable years in which section 1411 is in effect:

(A) A, an unmarried individual, has adjusted gross income in Year 1 as follows:

Wages	$1,600,000
Interest income	400,000
Adjusted gross income	2,000,000

In addition, A has the following items of expense qualifying as itemized deductions:

Investment expenses	$70,000
Job-related expenses	30,000
Investment interest expense	75,000
State income taxes	120,000

A's investment expenses and job-related expenses are miscellaneous itemized deductions. In addition, A's investment interest expense and investment expenses are properly allocable to net investment income (within the meaning of this section). A's job-related expenses are not properly allocable to net investment income. Of the state income tax expense, A applied a reasonable method pursuant to paragraph (g)(1) of this section to properly allocate $20,000 to net investment income.

(B) A's 2-percent floor under section 67 is $40,000 (2% of $2,000,000). For Year 1, assume the section 68 limitation starts at adjusted gross income of $200,000. The section 68 overall limitation disallows $54,000 of A's itemized deductions that are subject to section 68 (3% of the excess of the $2,000,000 adjusted gross income over the $200,000 limitation threshold).

(C)(1) A's total miscellaneous itemized deductions allowable before the application of section 67 is $100,000 ($70,000 in investment expenses plus $30,000 in job-related expenses), and the total miscellaneous deductions allowed after the application of section 67 is $60,000 ($100,000 minus $40,000).

(2) The amount of the miscellaneous itemized deductions properly allocable to net investment income after the application of section 67 is $60,000 (the lesser of $70,000 in investment expenses that are deductible as a miscellaneous itemized deduction and properly allocable to net investment income or

$60,000 of miscellaneous itemized deductions allocable to net investment income allowed after the application of section 67).

(D)(1) The amount of itemized deductions allocable to net investment income after applying section 67 to deductions that are also miscellaneous itemized deductions but before applying section 68 is $155,000. This amount is the sum of $60,000 of miscellaneous itemized deductions determined in (C)(2), plus $20,000 in state income tax properly allocable to net investment income, plus $75,000 of investment interest expense. However, under section 68(c)(2), the $75,000 deduction for investment interest expenses is not subject to the section 68 limitation on itemized deductions and is excluded from the computation under § 1.1411–4(f)(7). Thus, the amount of itemized deductions allocable to net investment income and subject to section 68, after applying section 67 but before applying section 68, is $80,000.

(2) A's total itemized deductions allowed subject to the limitation under section 68 and after application of section 67, but before the application of section 68, are the following:

Miscellaneous itemized deductions	$60,000
State income tax	120,000
Deductions subject to section 68	180,000

(3) Of A's itemized deductions that are subject to the limitation under section 68, the amount allowed after the application of section 68 is $126,000 ($180,000 minus the $54,000 disallowed in (B)).

(E) Under paragraph (f)(7)(ii) of this section, the amount of itemized deductions allowed in determining net investment income after applying sections 67 and 68 is the lesser of $80,000 (the sum of $60,000 determined under paragraph (C)(2) and $20,000 state income tax allocable to net investment income) or $126,000 (determined under (D)(3)). Therefore, A's itemized deductions that are properly allocable to net investment income are $155,000 ($80,000 of properly allocable itemized deductions subject to section 67 or 68 plus $75,000 of investment interest expense (which is not subject to either section 67 or section 68 limitations)).

(g) *Special rules*—(1) *Deductions allocable to both net investment income and excluded income.* In the case of a properly allocable deduction described in section 1411(c)(1)(B) and paragraph (f) of this section that is allocable to both net investment income and excluded income, the portion of the deduction that is properly allocable to net investment income may be determined by taxpayers using any reasonable method. Examples of reasonable methods of allocation include, but are not limited to, an allocation of the deduction based on the ratio of the amount of a taxpayer's gross income (including net gain) described in § 1.1411–4(a)(1) to the amount of the taxpayer's adjusted gross income (as defined under section 62 (or section 67(e) in the case of an estate or trust)). In the case of an estate or trust, an allocation of a deduction pursuant to rules described in § 1.652(b)–3(b) (and § 1.641(c)–1(h) in the case of an ESBT) is also a reasonable method.

(2) *Recoveries of properly allocable deductions*—(i) *General rule.* If a taxpayer is refunded, reimbursed, or otherwise recovers any portion of an amount deducted as a section 1411(c)(1)(B) properly allocable deduction in a prior year, and such amount is not otherwise included in net investment income in the year of recovery under section 1411(c)(1)(A), the amount of the recovery will reduce the taxpayer's total section 1411(c)(1)(B) properly allocable deductions in the year of recovery (but not below zero). The preceding sentence applies regardless of whether the amount of the recovery is excluded from gross income by reason of section 111.

(ii) *Recoveries of items allocated between net investment income and excluded income.* In the case of a refund of any item that was deducted under section 1411(c)(1)(B) in a prior year and the gross amount of the deduction was allocated between items of net investment income and excluded income pursuant to paragraph (g)(1) of this section, the amount of the reduction in section 1411(c)(1)(B) properly allocable deductions in the year of receipt under this paragraph (g)(2) is the total amount of the refund multiplied by a

fraction. The numerator of the fraction is the amount of the total deduction allocable to net investment income in the prior year to which the refund relates. The denominator of the fraction is the total amount of the deduction in the prior year to which the refund relates.

(iii) *Recoveries with no prior year benefit.* For purposes of this paragraph (g)(2), section 111 applies to reduce the amount of any reduction required by paragraph (g)(2)(i) of this section to the extent that such previously deducted amount did not reduce the tax imposed by section 1411. To the extent a deduction is taken into account in computing a taxpayer's net operating loss deduction under paragraph (h) of this section, section 111(c) applies. Except as provided in the preceding sentence, for purposes of this paragraph (g)(2), no reduction of section 1411(c)(1)(B) properly allocable deductions is required in a year when such recovered item is attributable to an amount deducted in a taxable year—

(A) Preceding the effective date of section 1411, or

(B) In which the taxpayer was not subject to section 1411 solely because that individual's (as defined in § 1.1411–2(a)) modified adjusted gross income (as defined in § 1.1411–2(c)) does not exceed the applicable threshold in § 1.1411–2(d) or such estate's or trust's (as defined in § 1.1411–3(a)(1)(i)) adjusted gross income does not exceed the amount described in section 1411(a)(2)(B)(ii) and § 1.1411–3(a)(1)(ii)(B)(*2*).

(iv) *Examples.* The following examples illustrate the provisions of this paragraph (g)(2). For purposes of these examples, assume the taxpayer is a United States citizen, uses a calendar taxable year, and Year 1 and all subsequent years are taxable years in which section 1411 is in effect:

Example 1. Recovery of amount included in income. A, an individual, is a 40% limited partner in LP. LP is a passive activity to A. In Year 1, A's distributable share of section 1411(c)(1)(A)(ii) income and properly allocable deductions described in § 1.1411–4(f)(2)(ii) were $50,000 and $37,000, respectively. In Year 2, LP received a refund of a properly allocable deduction described in § 1.1411–4(f)(2)(ii). A's distributable share of the recovered deduction is $2,000. Since the $2,000 recovery constitutes gross income described in section 1411(c)(1)(A)(ii) in Year 2, A does not reduce any properly allocable deductions attributable to Year 2.

Example 2. State income tax refund. In Year 1, D, an individual, allocated $15,000 of taxes out of a total of $75,000 to net investment income under paragraph (f)(3)(iii) of this section. D received no tax benefit from the deduction in Year 1 for chapter 1 purposes due to the alternative minimum tax, but it did reduce D's section 1411 tax. In Year 3, D received a refund of $5,000. For chapter 1 purposes, D excludes the $5,000 refund from gross income in Year 3 by reason of section 111. In Year 3, D allocated $30,000 of state income taxes out of a total of $90,000 to net investment income under paragraph (f)(3)(iii) of this section. Although the refund is excluded from D's gross income, D must nonetheless reduce Year 3's section 1411(c)(1)(B) properly allocable deductions by $1,000 ($5,000 × ($15,000/$75,000)). D's allocation of 33⅓% of section 164(a)(3) taxes in Year 3 to net investment income is irrelevant to the calculation of the amount of the reduction required by this paragraph (g)(2).

Example 3. State income tax refund with no prior year benefit. Same facts as *Example 2,* except in Year 1, D's section 1411(c)(1)(B) properly allocable deductions exceeded D's section 1411(c)(1)(A) income by $300. As a result, D was not subject to section 1411 in Year 1. Pursuant to paragraph (g)(2)(iii) of this section, D does not reduce Year 3's section 1411(c)(1)(B) properly allocable deductions for recoveries of amounts to the extent that such deductions did not reduce the tax imposed by section 1411. Therefore, D must reduce Year 3's section 1411(c)(1)(B) properly allocable deductions by $700 ($1,000 less $300).

(3) *Deductions described in section 691(b).* For purposes of paragraph (f) of this section, properly allocable deductions include items of deduction described in section 691(b), provided that the item otherwise would have been deductible to the decedent under § 1.1411–4(f). For example, an estate may deduct the decedent's unpaid investment interest expense in computing its net investment income because section 691(b) specifically allows the deduction under section 163, and § 1.1411–4(f)(3)(i) allows those deductions as well. However, an estate or trust may not deduct a payment of real estate taxes on the decedent's principal residence that were unpaid at death in computing its net investment income because, although real estate taxes are deductible under section 164 and specifically are allowed by section 691(b), the real estate taxes

would not have been a properly allocable deduction of the decedent under § 1.1411–4(f).

(4) *Amounts described in section 642(h).* For purposes of the calculation of net investment income under this section, one or more beneficiaries succeeding to the property of the estate or trust, within the meaning of section 642(h), shall—

(i) Treat excess capital losses of the estate or trust described in section 642(h)(1) as capital losses of the beneficiary in the calculation of net gain in paragraph (d) and paragraph (f)(4) of this section, as applicable, in a manner consistent with section 642(h)(1);

(ii) Treat excess net operating losses of the estate or trust described in section 642(h)(1) as net operating losses of the beneficiary in the calculation of net investment income in paragraphs (f)(2)(iv) and (h) of this section in a manner consistent with section 642(h)(1); and

(iii) Treat the deductions described in paragraph (f) of this section (other than those taken into account under paragraph (g)(4)(i) or (ii) of this section) that exceed the gross investment income described in paragraph (a)(1) of this section (after taking into account any modifications, adjustments, and special rules for calculating net investment income in section 1411 and the regulations thereunder) of a terminating estate or trust as a section 1411(c)(1)(B) deduction of the beneficiary in a manner consistent with section 642(h)(2).

(5) *Treatment of self-charged interest income.* Gross income from interest (within the meaning of section 1411(c)(1)(A)(i) and paragraph (a)(1)(i) of this section) that is received by the taxpayer from a nonpassive activity of such taxpayer, solely for purposes of section 1411, is treated as derived in the ordinary course of a trade or business not described in § 1.1411–5. The amount of interest income that is treated as derived in the ordinary course of a trade or business not described in § 1.1411–5, and thus excluded from the calculation of net investment income, under this paragraph (g)(5) is limited to the amount that would have been considered passive activity gross income under the rules of § 1.469–7 if the payor was a passive activity of the taxpayer. For purposes of this rule, the term nonpassive activity does not include a trade or business described in § 1.1411–5(a)(2). However, this rule does not apply to the extent the corresponding deduction is taken into account in determining self-employment income that is subject to tax under section 1401(b).

(6) *Treatment of certain nonpassive rental activities*—(i) *Gross income from rents.* To the extent that gross rental income described in paragraph (a)(1)(i) of this section is treated as not derived from a passive activity by reason of § 1.469–2(f)(6) or as a consequence of a taxpayer grouping a rental activity with a trade or business activity under § 1.469–4(d)(1), such gross rental income is deemed to be derived in the ordinary course of a trade or business within the meaning of paragraph (b) of this section.

(ii) *Gain or loss from the disposition of property.* To the extent that gain or loss resulting from the disposition of property is treated as nonpassive gain or loss by reason of § 1.469–2(f)(6) or as a consequence of a taxpayer grouping a rental activity with a trade or business activity under § 1.469–4(d)(1), then such gain or loss is deemed to be derived from property used in the ordinary course of a trade or business within the meaning of paragraph (d)(4)(i) of this section.

(7) *Treatment of certain real estate professionals*—(i) *Safe Harbor.* In the case of a real estate professional (as defined in section 469(c)(7)(B)) that participates in a rental real estate activity for more than 500 hours during such year, or has participated in such real estate activities for more than 500 hours in any five taxable years (whether or not consecutive) during the ten taxable years that immediately precede the taxable year, then—

(A) Such gross rental income from that rental activity is deemed to be derived in the ordinary course of a trade or business within the meaning of paragraph (b) of this section; and

(B) Gain or loss resulting from the disposition of property used in such rental real estate activity is deemed to be derived from property used in the ordinary course of a trade or business

within the meaning of paragraph (d)(4)(i) of this section.

(ii) *Definitions*—(A) *Participation*. For purposes of establishing participation under this paragraph (g)(7), any participation in the activity that would count towards establishing material participation under section 469 shall be considered.

(B) *Rental real estate activity*. The term *rental real estate activity* used in this paragraph (g)(7) is a rental activity within the meaning of §1.469–1T(e)(3). An election to treat all rental real estate as a single rental activity under §1.469–9(g) also applies for purposes of this paragraph (g)(7). However, any rental real estate that the taxpayer grouped with a trade or business activity under §1.469–4(d)(1)(i)(A) or (d)(1)(i)(C) is not a rental real estate activity.

(iii) *Effect of safe harbor*. The inability of a real estate professional to satisfy the safe harbor in this paragraph (g)(7) does not preclude such taxpayer from establishing that such gross rental income and gain or loss from the disposition of property, as applicable, is not included in net investment income under any other provision of section 1411.

(8) *Treatment of former passive activities*—(i) *Section 469(f)(1)(A) losses*. Losses allowed in computing taxable income by reason of the rules governing former passive activities in section 469(f)(1)(A) are taken into account in computing net gain under paragraph (d) of this section or as properly allocable deductions under paragraph (f) of this section, as applicable, in the same manner as such losses are taken into account in computing taxable income (as defined in section 63). The preceding sentence applies only to the extent the net income or net gain from the former passive activity (as defined in section 469(f)(3)) is included in net investment income.

(ii) *Section 469(f)(1)(C) losses*. Losses allowed in computing taxable income by reason of section 469(f)(1)(C) are taken into account in computing net gain under paragraph (d) of this section or as properly allocable deductions under paragraph (f) of this section, as applicable, in the same manner as such losses are taken into account in computing taxable income (as defined in section 63).

(iii) *Examples*. The following examples illustrate the provisions of this paragraph (g)(8). For purposes of these examples, assume the taxpayer is a United States citizen, uses a calendar taxable year, and Year 1 and all subsequent years are taxable years in which section 1411 is in effect:

Example 1. (i) B, an individual taxpayer, owns a 50% interest in SCorp, an S corporation engaged in the trade or business of retail clothing sales. B also owns a single family rental property, a passive activity. B materially participates in the retail sales activity of SCorp, but B has $10,000 of suspended losses from prior years when the retail sales activity of SCorp was a passive activity of B. Therefore, the retail sales activity of SCorp is a former passive activity within the meaning of section 469(f)(3).

(ii) In Year 1, B reports $205,000 of wages, $7,000 of nonpassive net income, $500 of interest income (attributable to working capital) from SCorp's retail sales activity, and $1,000 of net rental income from the single family rental property. B's Year 1 modified adjusted gross income (as defined in §1.1411–2(c)) is $205,500; which includes $205,000 of wages, $500 of interest income, $7,000 of nonpassive income from SCorp, $7,000 of section 469(f)(1)(A) losses, $1,000 of passive income from the single family rental property and $1,000 of section 469(f)(1)(C) losses.

(iii) For purposes of the calculation of B's Year 1 net investment income, B includes the $500 of interest income and $1,000 of net passive income from the single family rental property. The $7,000 of nonpassive income from SCorp's retail sales activity is excluded from net investment income because the income is not attributable to a trade or business described in §1.1411–5. Therefore, pursuant to the rules of paragraph (g)(8)(i) of this section, the $7,000 of section 469(f)(1)(A) losses are not taken into account in computing B's net investment income. However, pursuant to the rules of paragraph (g)(8)(ii) of this section, the $1,000 of passive losses allowed by reason of section 469(f)(1)(C), which are allowed as a deduction in Year 1 by reason of B's $1,000 of passive income from the single family rental property are allowed in computing B's net investment income. As a result, B's net investment income is $500 ($500 of interest income plus $1,000 of passive rental income less $1,000 of section 469(f)(1)(C) losses). Although the $500 of interest income is attributable to SCorp and includable in B's net investment income, such income is not taken into account when calculating the amount of section 469(f)(1)(A) losses allowed in the current year. Therefore, such income is not taken into account in

computing the amount of section 469(f)(1)(A) losses allowed by reason of paragraph (g)(8)(i) of this section. Pursuant to section 469(b), B carries forward $2,000 of suspended passive losses attributable to SCorp's retail sales activity to Year 2.

Example 2. Same facts as *Example 1.* In Year 2, B materially participates in the retail sales activity of SCorp, and disposes of his entire interest in SCorp for a $9,000 long-term capital gain. Pursuant to §1.469–2T(e)(3), the $9,000 gain is characterized as nonpassive income. Pursuant to section 469(f)(1)(A), the remaining $2,000 of suspended passive loss is allowed because the $9,000 gain is treated as nonpassive income. Assume that under section 1411(c)(4) and §1.1411–7, B takes into account only $700 of the $9,000 gain in computing net investment income for Year 2. Pursuant to paragraph (g)(8)(i) of this section, B may take into account $700 of the $2,000 loss allowed by section 469(f)(1)(A) in computing net investment income for Year 2. Pursuant to paragraph (g)(8)(i) of this section, B may not deduct the remaining $1,300 passive loss allowed for chapter 1 in calculating net investment income for Year 2.

(9) *Treatment of section 469(g)(1) losses.* Losses allowed in computing taxable income by reason of section 469(g) are taken into account in computing net gain under paragraph (d) of this section or as properly allocable deductions under paragraph (f) of this section, as applicable, in the same manner as such losses are taken into account in computing taxable income (as defined in section 63).

(10) *Treatment of section 707(c) guaranteed payments.* [Reserved]

(11) *Treatment of section 736 payments.* [Reserved]

(12) *Income and deductions from certain notional principal contracts.* [Reserved]

(13) *Treatment of income or loss from REMIC residual interests.* [Reserved]

(h) *Net operating loss*—(1) *General rule.* For purposes of paragraph (f)(2)(iv) of this section, the total section 1411 NOL amount of a net operating loss deduction for a taxable year is calculated by first determining the applicable portion of the taxpayer's net operating loss for each loss year under paragraph (h)(2) of this section. Next, the applicable portion for each loss year is used to determine the section 1411 NOL amount for each net operating loss carried from a loss year and deducted in the taxable year as provided in paragraph (h)(3) of this section. The section 1411 NOL amounts of each net operating loss carried from a loss year and deducted in the taxable year are then added together as provided in paragraph (h)(4) of this section. This sum is the total section 1411 NOL amount of the net operating loss deduction for the taxable year that is allowed as a properly allocable deduction in determining net investment income for the taxable year. For purposes of this paragraph (h), both the amount of a net operating loss for a loss year and the amount of a net operating loss deduction refer to such amounts as determined for purposes of chapter 1.

(2) *Applicable portion of a net operating loss.* In any taxable year beginning after December 31, 2012, in which a taxpayer incurs a net operating loss, the applicable portion of such loss is the lesser of:

(i) The amount of the net operating loss for the loss year that the taxpayer would incur if only items of gross income that are used to determine net investment income and only properly allocable deductions are taken into account in determining the net operating loss in accordance with section 172(c) and (d); or

(ii) The amount of the taxpayer's net operating loss for the loss year.

(3) *Section 1411 NOL amount of a net operating loss carried to and deducted in a taxable year.* The section 1411 NOL amount of each net operating loss that is carried from a loss year that is allowed as a deduction is the total amount of such net operating loss carried from the loss year allowed as a deduction under section 172(a) in the taxable year multiplied by a fraction. The numerator of the fraction is the applicable portion of the net operating loss for that loss year, as determined under paragraph (h)(2) of this section. The denominator of the fraction is the total amount of the net operating loss for the same loss year.

(4) *Total section 1411 NOL amount of a net operating loss deduction.* The section 1411 NOL amounts of each net operating loss carried to and deducted in the taxable year as determined under paragraph (h)(3) of this section are added together to determine the *total* section 1411 NOL amount of the net operating loss deduction for the taxable

year that is properly allocable to net investment income.

(5) *Examples*. The following examples illustrate the provisions of this paragraph (h). For purposes of these examples, assume the taxpayer is a United States citizen, uses a calendar taxable year, and Year 1 and all subsequent years are taxable years in which section 1411 is in effect:

Example 1. (i)(A) In Year 1, A, an unmarried individual, has the following items of income and deduction: $200,000 in wages, $50,000 in gross income from a trade or business of trading in financial instruments or commodities (as defined in §1.1411–5(a)(2)) (trading activity), $10,000 of dividends, $1,000,000 in loss from his sole proprietorship (which is not a trade or business described in §1.1411–5), $12,000 of non-business investment expenses, and $250,000 in trading loss deductions. As a result, for income tax purposes A sustains a section 172(c) net operating loss of $1,000,000. A makes an election under section 172(b)(3) to waive the carryback period for this net operating loss.

(B) For purposes of section 1411, A's net investment income for Year 1 is the excess (if any) of $60,000 ($50,000 trading activity gross income plus $10,000 dividend income) over $262,000 ($250,000 trading loss deductions plus $12,000 nonbusiness expenses).

(C) The amount of the net operating loss for Year 1 determined under section 172 that A would incur if only items of gross income that are used to determine net investment income and only properly allocable deductions are taken into account is $200,000. This amount is the excess of $250,000 trading loss deductions, over $50,000 trading activity gross income. Under section 172(d)(4), in determining the net operating loss, the $12,000 nonbusiness expenses are allowed only to the extent of the $10,000 dividend income. The $200,000 net operating loss determined using only properly allocable deductions and gross income items used in determining net investment income is less than A's actual net operating loss for Year 1 of $1,000,000, and accordingly the applicable portion for Year 1 is $200,000. The ratio used to calculate section 1411 NOL amounts of A's Year 1 net operating loss is $200,000 (net operating loss determined using only properly allocable deductions and gross income items used in determining net investment income)/$1,000,000 (net operating loss), or 0.2.

(ii) For Year 2, A has $250,000 of wages, no gross income from the trading activity, $300,000 of income from his sole proprietorship, and $10,000 in trading loss deductions. For income tax purposes, A deducts $540,000 of the net operating loss carried over from Year 1. In addition, under §1.1411–2(c), the $540,000 net operating loss will be allowed as a deduction in computing A's Year 2 modified adjusted gross income. Because A's modified adjusted gross income is $0, A is not subject to net investment income tax. For purposes of A's net investment income calculation, the section 1411 NOL amount of the $540,000 net operating loss from Year 1 that A deducts in Year 2 is $108,000 ($540,000 multiplied by 0.2 (the fraction determined based on the applicable portion of the net operating loss in the loss year)). The amount of the Year 1 net operating loss carried over to Year 3 is $460,000. For purposes of A's net investment income calculation, this net operating loss carryover amount includes a section 1411 NOL amount of $92,000 ($460,000 multiplied by 0.2). The section 1411 NOL amount may be applied in determining A's net investment income in Year 3.

(iii)(A) For Year 3, A has $400,000 of wages, $200,000 in trading gains which are gross income from the trading activity, $250,000 of income from his sole proprietorship, and $10,000 in trading loss deductions. For income tax purposes, A deducts the remaining $460,000 of the net operating loss from Year 1. In addition, under §1.1411–2(c), the $460,000 net operating loss deduction reduces A's Year 3 modified adjusted gross income to $380,000.

(B) A's section 1411 NOL amount of the net operating loss deduction for Year 3 is $92,000, which is the $460,000 net operating loss deduction for Year 3 multiplied by 0.2.

(C) A's net investment income for Year 3 before the application of paragraph (f)(2)(iv) of this section is $190,000 ($200,000 in gross income from the trading activity, minus $10,000 in trading loss deductions). After the application of paragraph (f)(2)(iv) of this section, A's net investment income for Year 3 is $98,000 ($190,000 minus $92,000, the total section 1411 NOL amount of the net operating loss deduction).

Example 2. (i) The facts for Year 1 are the same as in *Example 1*.

(ii)(A) For Year 2, A has $100,000 in wages, $200,000 in gross income from the trading activity, $15,000 of dividends, $250,000 in losses from the sole proprietorship, $10,000 of nonbusiness investment expenses, and $355,000 in trading loss deductions. As a result, for income tax purposes A sustains a section 172(c) net operating loss of $300,000. A makes an election under section 172(b)(3) to waive the carryback period for the Year 2 net operating loss.

(B) For purposes of section 1411, A's net investment income for Year 2 is the excess (if any) of $215,000 ($200,000 trading activity gross income plus $15,000 dividend income) over $365,000 ($355,000 trading loss deductions plus $10,000 nonbusiness expenses).

(C) The amount of the net operating loss for Year 2 determined under section 172 that A would incur if only items of gross income that are used to determine net investment

income and only properly allocable deductions are taken into account is $150,000. This amount is the excess of $365,000 ($355,000 trading loss deductions plus $10,000 nonbusiness expenses) over $215,000 ($200,000 trading activity gross income plus $15,000 dividend income). Under section 172(d)(4), in determining the net operating loss, the $10,000 nonbusiness expenses are allowed in full against the $15,000 dividend income. The $150,000 net operating loss determined using only properly allocable deductions and gross income items used in determining net investment income is less than A's actual net operating loss for Year 2 of $300,000, and accordingly the applicable portion is $150,000. The ratio used to calculate the section 1411 NOL amount of A's Year 2 net operating loss is $150,000 (the applicable portion)/$300,000 (net operating loss), or 0.5.

(iii) For Year 3, A has $250,000 of wages, no gross income from the trading activity, $300,000 of income from his sole proprietorship, and $10,000 in trading loss deductions. For income tax purposes, A deducts $540,000 of the net operating loss from Year 1. In addition, under §1.1411–2(c), the $540,000 net operating loss will be allowed as a deduction in computing A's Year 3 modified adjusted gross income. Because A's modified adjusted gross income is $0, A is not subject to net investment income tax. The section 1411 NOL amount of the $540,000 net operating loss from Year 1 that A deducts in Year 3 is $108,000 ($540,000 multiplied by 0.2 (the fraction used to calculate the section 1411 NOL amount of the net operating loss)), and this is also the total section 1411 NOL amount for Year 3. The amount of the Year 1 net operating loss carried over to Year 4 is $460,000. This net operating loss carryover amount includes a section 1411 NOL amount of $92,000 ($460,000 multiplied by 0.2) that may be applied in determining net investment income in Year 4. None of the Year 2 net operating loss is deducted in Year 3 so that the $300,000 Year 2 net operating loss (including the section 1411 NOL amount of $150,000) is carried to Year 4.

(iv)(A) For Year 4, A has $150,000 of wages, $450,000 in trading gains which are gross income from the trading activity, $250,000 of income from his sole proprietorship, and $10,000 in trading loss deductions. For income tax purposes, A deducts the remaining $460,000 of the net operating loss carryover from Year 1 and the $300,000 net operating loss carryover from Year 2, for a total net operating loss deduction in Year 4 of $760,000. In addition, under §1.1411–2(c), the $760,000 net operating loss deduction reduces A's Year 4 modified adjusted gross income to $80,000.

(B) A's total section 1411 NOL amount of the net operating loss deduction for Year 4 is $242,000, which is the sum of the $92,000 ($460,000 net operating loss carryover from Year 1 and deducted in Year 4 multiplied by 0.2 (the ratio used to calculate the section 1411 NOL amount of the Year 1 net operating loss)) plus $150,000 ($300,000 net operating loss carryover from Year 2 and deducted in Year 4 multiplied by 0.5 (the ratio used to calculate the section 1411 NOL amount of the Year 2 net operating loss)).

(C) A's net investment income for Year 4 before the application of paragraph (f)(2)(iv) of this section is $440,000 ($450,000 in gross income from the trading activity, minus $10,000 in trading loss deductions). After the application of paragraph (f)(2)(iv) of this section, A's net investment income for Year 4 is $198,000 ($440,000 minus $242,000, the total section 1411 NOL amount of the Year 4 net operating loss deduction).

(i) *Effective/applicability date.* This section applies to taxable years beginning after December 31, 2013. However, taxpayers may apply this section to taxable years beginning after December 31, 2012, in accordance with §1.1411–1(f).

[T.D. 9644, 78 FR 72424, Dec. 2, 2013, as amended at 79 FR 18160, Apr. 1, 2014]

§1.1411–5 Trades or businesses to which tax applies.

(a) *In general.* A trade or business is described in this section if such trade or business involves the conduct of a trade or business, and such trade or business is either—

(1) A passive activity (within the meaning of paragraph (b) of this section) with respect to the taxpayer; or

(2) The trade or business of a trader trading in financial instruments (as defined in paragraph (c)(1) of this section) or commodities (as defined in paragraph (c)(2) of this section).

(b) *Passive activity*—(1) *In general.* A passive activity is described in this section if—

(i) Such activity is a trade or business; and

(ii) Such trade or business is a passive activity with respect to the taxpayer within the meaning of section 469 and the regulations thereunder.

(2) *Application of income recharacterization rules*—(i) *Income and gain recharacterization.* To the extent that any income or gain from a trade or business is recharaterized as ''not from a passive activity'' by reason of §1.469–2T(f)(2), §1.469–2(f)(5), or §1.469–2(f)(6), such trade or business does not constitute a passive activity within the

meaning of paragraph (b)(1)(ii) of this section solely with respect to such recharaterized income or gain.

(ii) *Gain recharacterization*. To the extent that any gain from a trade or business is recharacterized as ''not from a passive activity'' by reason of §1.469–2(c)(2)(iii) and does not constitute portfolio income under §1.469–2(c)(2)(iii)(F), such trade or business does not constitute a passive activity within the meaning of paragraph (b)(1)(ii) of this section solely with respect to such recharacterized gain.

(iii) *Exception for certain portfolio recharacterizations*. To the extent that any income or gain from a trade or business is recharacterized as ''not from a passive activity'' and is further characterized as portfolio income under §1.469–2(f)(10) or §1.469–2(c)(2)(iii)(F), then such trade or business constitutes a passive activity within the meaning of paragraph (b)(1)(ii) of this section solely with respect to such recharacterized income or gain.

(3) *Examples*. The following examples illustrate the principles of paragraph (b)(1) of this section and the ordinary course of a trade or business exception in §1.1411–4(b). In each example, unless otherwise indicated, the taxpayer uses a calendar taxable year, the taxpayer is a United States citizen, and Year 1 and all subsequent years are taxable years in which section 1411 is in effect:

Example 1. Rental activity. A, an unmarried individual, rents a commercial building to B for $50,000 in Year 1. A is not involved in the activity of the commercial building on a regular and continuous basis, therefore, A's rental activity does not involve the conduct of a trade or business, and under section 469(c)(2), A's rental activity is a passive activity. Because paragraph (b)(1)(i) of this section is not satisfied, A's rental income of $50,000 is not derived from a trade or business described in paragraph (b)(1) of this section. However, A's rental income of $50,000 still constitutes gross income from rents within the meaning of §1.1411–4(a)(1)(i) because rents are included in the determination of net investment income under §1.1411–4(a)(1)(i) whether or not derived from a trade or business described in paragraph (b)(1) of this section.

Example 2. Application of grouping rules under section 469. In Year 1, A, an unmarried individual, owns an interest in PRS, a partnership for Federal income tax purposes. PRS is engaged in two activities, X and Y, which constitute trades or businesses, and neither of which constitute trading in financial instruments or commodities (within the meaning of paragraph (a)(2) of this section). Pursuant to §1.469–4, A has properly grouped X and Y together as one activity (the grouped activity). A participates in X for more than 500 hours during Year 1 and would be treated as materially participating in activity X within the meaning of §1.469–5T(a)(1) if A's material participation were determined only with respect to activity X. A only participates in Y for 50 hours during Year 1. If not for the grouping of the X and Y activities together, A would not be treated as materially participating in Y within the meaning of §1.469–5T(a). However, pursuant to §§1.469–4 and 1.469–5T(a)(1), A materially participates in the grouped activity. Therefore, for purposes of paragraph (b)(1)(ii) of this section, neither X nor Y is a passive activity with respect to A. Accordingly, with respect to A, neither X nor Y is a trade or business described in paragraph (b)(1) of this section.

Example 3. Application of the rental activity exceptions. B, an unmarried individual, is a partner in PRS, which is engaged in an equipment leasing activity. The average period of customer use of the equipment is seven days or less (and therefore meets the exception in §1.469–1T(e)(3)(ii)(A)). B materially participates in the equipment leasing activity (within the meaning of §1.469–5T(a)). The equipment leasing activity constitutes a trade or business. In Year 1, B has modified adjusted gross income (as defined in §1.1411–2(c)) of $300,000, all of which is derived from PRS. All of the income from PRS is derived in the ordinary course of the equipment leasing activity, and all of PRS's property is held in the equipment leasing activity. Of B's allocable share of income from PRS, $275,000 constitutes gross income from rents (within the meaning of §1.1411–4(a)(1)(i)). While $275,000 of the gross income from the equipment leasing activity meets the definition of rents in §1.1411–4(a)(1)(i), the activity meets one of the exceptions to rental activity in §1.469–1T(e)(3)(ii) and B materially participates in the activity. Therefore, the trade or business is not a passive activity with respect to B for purposes of paragraph (b)(1)(ii) of this section. Because the rents are derived in the ordinary course of a trade or business not described in paragraph (a) of this section, the ordinary course of a trade or business exception in §1.1411–4(b) applies, and the rents are not described in §1.1411–4(a)(1)(i). Furthermore, because the equipment leasing trade or business is not a trade or business described in paragraph (a)(1) or (a)(2) of this section, the $25,000 of other gross income is not net investment income under §1.1411–4(a)(1)(ii). However, the $25,000 of other gross income may be net investment

income by reason of section 1411(c)(3) and §1.1411–6 if it is attributable to PRS's working capital. Finally, gain or loss from the sale of the property held in the equipment leasing activity will not be subject to §1.1411–4(a)(1)(iii) because, although it is attributable to a trade or business, it is not a trade or business to which the section 1411 tax applies.

Example 4. Application of section 469 and other gross income under §1.1411–4(a)(1)(ii). Same facts as *Example 3*, except B does not materially participate in the equipment leasing trade or business and therefore the trade or business is a passive activity with respect to B for purposes of paragraph (b)(1)(ii) of this section. Accordingly, the $275,000 of gross income from rents is described in §1.1411–4(a)(1)(i) because the rents are derived from a trade or business that is a passive activity with respect to B. Furthermore, the $25,000 of other gross income from the equipment leasing trade or business is described in §1.1411–4(a)(1)(ii) because the gross income is derived from a trade or business described in paragraph (a)(1) of this section. Finally, gain or loss from the sale of the property used in the equipment leasing trade or business is subject to §1.1411–4(a)(1)(iii) because the trade or business is a passive activity with respect to B, as described in paragraph (b)(1)(ii) of this section.

Example 5. Application of the portfolio income rule and section 469. C, an unmarried individual, is a partner in PRS, a partnership engaged in a trade or business that does not involve a rental activity. C does not materially participate in PRS within the meaning of §1.469–5T(a). Therefore, the trade or business of PRS is a passive activity with respect to C for purposes of paragraph (a)(1) of this section. C's $500,000 allocable share of PRS's income consists of $450,000 of gross income from a trade or business and $50,000 of gross income from dividends and interest (within the meaning of §1.1411–4(a)(1)(i)) that is not derived in the ordinary course of the trade or business of PRS. Therefore, C's $500,000 allocable share of PRS's income is subject to section 1411. C's $50,000 allocable share of PRS's income from dividends and interest is subject to §1.1411–4(a)(1)(i) because the share is gross income from dividends and interest that is not derived in the ordinary course of a trade or business (that is, the ordinary course of a trade or business exception in §1.1411–4(b) is inapplicable). C's $450,000 allocable share of PRS's income is subject to §1.1411–4(a)(1)(ii) because it is gross income from a trade or business that is a passive activity.

(c) *Trading in financial instruments or commodities*—(1) *Definition of financial instruments.* For purposes of section 1411 and the regulations thereunder, the term *financial instruments* includes stocks and other equity interests, evidences of indebtedness, options, forward or futures contracts, notional principal contracts, any other derivatives, or any evidence of an interest in any of the items described in this paragraph (c)(1). An evidence of an interest in any of the items described in this paragraph (c)(1) includes, but is not limited to, short positions or partial units in any of the items described in this paragraph (c)(1).

(2) *Definition of commodities.* For purposes of section 1411 and the regulations thereunder, the term *commodities* refers to items described in section 475(e)(2).

(d) *Effective/applicability date.* This section applies to taxable years beginning after December 31, 2013. However, taxpayers may apply this section to taxable years beginning after December 31, 2012, in accordance with §1.1411–1(f).

[T.D. 9644, 78 FR 72424, Dec. 2, 2013, as amended at 79 FR 18160, Apr. 1, 2014]

§1.1411–6 Income on investment of working capital subject to tax.

(a) *General rule.* For purposes of section 1411, any item of gross income from the investment of working capital will be treated as not derived in the ordinary course of a trade or business, and any net gain that is attributable to the investment of working capital will be treated as not derived in the ordinary course of a trade or business. In determining whether any item is gross income from or net gain attributable to an investment of working capital, principles similar to those described in §1.469–2T(c)(3)(ii) apply. See §1.1411–4(f) for rules regarding properly allocable deductions with respect to an investment of working capital and §1.1411–7 for rules relating to the adjustment to net gain on the disposition of interests in a partnership or S corporation.

(b) *Example.* The following example illustrates the principles of this section. Assume for purposes of the example that the taxpayer uses a calendar taxable year, the taxpayer is a United States citizen, and Year 1 and all subsequent years are taxable years in which section 1411 is in effect:

Example. (i) A, an unmarried individual, operates a restaurant, which is a section 162

trade or business but is not a trade or business described in § 1.1411–5(a)(1) with respect to A. A owns and conducts the restaurant business through S, an S corporation wholly-owned by A. S is able to pay all of the restaurant's current obligations with cash flow generated by the restaurant. S utilizes an interest-bearing checking account at a local bank to make daily deposits of cash receipts generated by the restaurant, and also to pay the recurring ordinary and necessary business expenses of the restaurant. The average daily balance of the checking account is approximately $2,500, but at any given time the balance may be significantly more or less than this amount depending on the short-term cash flow needs of the business. In addition, S has set aside $20,000 for the potential future needs of the business in case the daily cash flow into and from the checking account becomes insufficient to pay the restaurant's recurring business expenses. S does not currently need to spend or use the $20,000 capital to conduct the restaurant business, and S deposits and maintains the $20,000 in an interest-bearing savings account at a local bank.

(ii) Both the $2,500 average daily balance of the checking account and the $20,000 savings account balance constitute working capital under § 1.469–2T(c)(3)(ii) and, pursuant to paragraph (a) of this section, the interest generated by this working capital will not be treated as derived in the ordinary course of S's restaurant business. Accordingly, the interest income derived by S from its checking and savings accounts and allocated to A under section 1366 constitutes gross income from interest under § 1.1411–4(a)(1)(i).

(c) *Effective/applicability date.* This section applies to taxable years beginning after December 31, 2013. However, taxpayers may apply this section to taxable years beginning after December 31, 2012, in accordance with § 1.1411–1(f).

[T.D. 9644, 78 FR 72424, Dec. 2, 2013]

§ 1.1411–7 Exception for dispositions of interests in partnerships and S corporations. [Reserved]

§ 1.1411–8 Exception for distributions from qualified plans.

(a) *General rule.* Net investment income does not include any distribution from a qualified plan or arrangement. For this purpose, the term qualified plan or arrangement means any plan or arrangement described in section 401(a), 403(a), 403(b), 408, 408A, or 457(b).

(b) *Rules relating to distributions.* This paragraph (b) provides rules for purposes of paragraph (a) of this section. For purposes of section 1411(c)(5) and this section, a distribution means the following:

(1) *Actual distributions.* Any amount actually distributed from a qualified plan or arrangement, as defined in paragraph (a) of this section, is a distribution within the meaning of section 1411(c)(5), and thus is not included in net investment income. Examples include a rollover to an eligible retirement plan within the meaning of section 402(c)(8)(B), a distribution of a plan loan offset amount within the meaning of Q&A–13(b) of § 1.72(p)–1, and certain corrective distributions under the Internal Revenue Code (Code).

(2) *Amounts treated as distributed.* Any amount that is treated as distributed from a qualified plan or arrangement under the Code for purposes of income tax is a distribution within the meaning of section 1411(c)(5), and thus is not included in net investment income. Examples include a conversion to a Roth IRA described in section 408A and a deemed distribution under section 72(p).

(3) *Amounts includible in gross income.* Any amount that is not treated as a distribution but is otherwise includible in gross income pursuant to a rule relating to amounts held in a qualified plan or arrangement described in paragraph (a) of this section is a distribution within the meaning of section 1411(c)(5), and thus is not included in net investment income. For example, any income of the trust of a qualified plan or arrangement that is applied to purchase a participant's life insurance coverage (the P.S. 58 costs) is a distribution within the meaning of section 1411(c)(5), and thus is not included in net investment income.

(4) *Amounts related to employer securities*—(i) *Dividends related to employer securities.* Any dividend that is deductible under section 404(k) and is paid in cash directly to plan participants or beneficiaries is a distribution within the meaning of section 1411(c)(5), and thus is not included in net investment income. However, any amount paid as a dividend after the employer securities have been distributed from a qualified plan is not a distribution within the

meaning of section 1411(c)(5), and thus is included in net investment income.

(ii) *Amounts related to the net unrealized appreciation in employer securities.* The amount of any net unrealized appreciation attributable to employer securities (within the meaning of section 402(e)(4)) realized on a disposition of those employer securities is a distribution within the meaning of section 1411(c)(5), and thus is not included in net investment income. However, any appreciation in value of the employer securities after the distribution from the qualified plan is not a distribution within the meaning of section 1411(c)(5), and is included in net investment income.

(c) *Effective/applicability date.* This section applies to taxable years beginning after December 31, 2013. However, taxpayers may apply this section to taxable years beginning after December 31, 2012, in accordance with § 1.1411–1(f).

[T.D. 9644, 78 FR 72424, Dec. 2, 2013]

§ 1.1411–9 Exception for self-employment income.

(a) *General rule.* Except as provided in paragraph (b) of this section, net investment income does not include any item taken into account in determining self-employment income that is subject to tax under section 1401(b) for such taxable year. For purposes of section 1411(c)(6) and this section, *taken into account* means income included and deductions allowed in determining net earnings from self-employment. However, amounts excepted in determining net earnings from self-employment under section 1402(a)(1)–(17), and thus excluded from self-employment income under section 1402(b), are not taken into account in determining self-employment income and thus may be included in net investment income if such amounts are described in § 1.1411–4. Except as provided in paragraph (b) of this section, if net earnings from self-employment consist of income or loss from more than one trade or business, all items taken into account in determining the net earnings from self-employment with respect to these trades or businesses (see § 1.1402(a)–2(c)) are considered taken into account in determining the amount of self-employment income that is subject to tax under section 1401(b) and therefore not included in net investment income.

(b) *Special rule for traders.* In the case of gross income described in §§ 1.1411–4(a)(1)(ii) and (a)(1)(iii) derived from a trade or business of trading in financial instruments or commodities (as described in § 1.1411–5(a)(2)), the deductions described in § 1.1411–4(f)(2)(ii) properly allocable to the taxpayer's trade or business of trading in financial instruments or commodities are taken into account in determining the taxpayer's self-employment income only to the extent that such deductions reduce the taxpayer's net earnings from self-employment (after aggregating under § 1.1402(a)–2(c) the net earnings from self-employment from any trade or business carried on by the taxpayer as an individual or as a member of a partnership). Any deductions described in § 1.1411–4(f)(2)(ii) that exceed the amount of net earnings from self-employment, in the aggregate (if applicable), are allowed in determining the taxpayer's net investment income under section 1411 and the regulations thereunder.

(c) *Examples.* The following examples illustrate the provisions of this section. For purposes of these examples, assume the taxpayer is a United States citizen, uses a calendar taxable year, and Year 1 and all subsequent years are taxable years in which section 1411 is in effect:

Example 1. Exclusion from self-employment income. A is a general partner in PRS, a partnership carrying on a trade or business that is not a trade or business of trading in financial instruments or commodities (within the meaning of § 1.1411–5(a)(2)). During Year 1, A's distributive share from PRS is $1 million, $300,000 of which is attributable to the gain on the sale of PRS's capital assets. Section 1402(a)(3)(A) provides an exclusion from net earnings from self-employment for any gain or loss from the sale or exchange of a capital asset. For Year 1, A has $700,000 self-employment income subject to self-employment tax. This $700,000 subject to self-employment tax is not included as part of net investment income under paragraph (a) of this section. However, the $300,000 attributable to the gain on PRS's sale of a capital asset is excluded from net earnings from self-employment, and from self-employment income, and thus is not covered by the exception in section 1411(c)(6). Therefore, the

$300,000 attributable to the gain on PRS's sale of a capital asset is included as net investment income if the other requirements of section 1411 are satisfied.

Example 2. Two trades or businesses. B is an individual engaged in two trades or businesses, Business X and Business Y, neither of which is the trade or business of trading in financial instruments or commodities (as described in §1.1411–5(a)(2)). B carries on Business X as a sole proprietor and B is also a general partner in a partnership that carries on Business Y. Business Y is a nonpassive activity of B. During Year 1, B had net earnings from self-employment consisting of the aggregate of a $50,000 loss (that is, after application of the exclusions under section 1402(a)(1)–(17)) from Business X, and $70,000 in income (after application of the exclusions under section 1402(a)(1)–(17)) from B's distributive share from the partnership from carrying on Business Y. Thus, B's net earnings from self-employment in Year 1 are $20,000. For Year 1, all of B's income, deductions, gains, and losses from Business X and distributive share from the partnership carrying on Business Y, other than those amounts excluded due to application of section 1402(a)(1)–(17), are taken into account in determining B's net earnings from self-employment and self-employment income for such taxable year. Accordingly, in calculating B's net investment income (as defined in §1.1411–4) for Year 1, B will not take into account the items of income, loss, gain, and deduction that comprise B's $50,000 loss attributable to Business X (after application of the exclusions under section 1402(a)(1)–(17)), and the items of income, loss, gain, and deduction that comprise B's $70,000 distributable share attributable to B's general partnership interest (after application of the exclusions under section 1402(a)(1)–(17)). Rather, only items of income, loss, gain, and deduction from the two separate businesses that were excluded from the calculation of B's net earnings from self-employment income due to the application of the exclusions under section 1402(a)(1)–(17), such as any capital gains and losses excluded under section 1402(a)(3), are considered for purposes of calculating B's net investment income for Year 1 in connection with these two trades or businesses.

Example 3. Special rule for trader with single trade or business. D is an individual engaged in the trade or business of trading in commodities (as described in §1.1411–5(a)(2)). D made a valid and timely election under section 475(f)(2). D derives $400,000 of trading gains, which are gross income described in §1.1411–4(a)(1) and $15,000 of expenses described in §1.1411–4(f)(2)(ii) from carrying on the trade or business. Pursuant to sections 475(f)(1)(D) and 1402(a)(3)(A), none of the gross income is taken into account in determining D's net earnings from self-employment and self-employment income. Therefore, under paragraph (a) of this section, the $400,000 of gross income is not covered by the exception in section 1411(c)(6). Because D had $0 net earnings from self-employment, the $15,000 of deductions did not reduce D's net earnings from self-employment under paragraph (b) of this section and §1.1411–(4)(f)(2)(ii). Therefore, the $15,000 of deductions may reduce D's gross income of $400,000 for purposes of section 1411.

Example 4. Special rule for trader with multiple trades or businesses. E is an individual engaged in two trades or businesses, Business X (which is not a trade or business of trading in financial instruments or commodities) and Business Y (which is a trade or business of trading in financial instruments or commodities (as described in §1.1411–5(a)(2)). E made a valid and timely election under section 475(f) with respect to Business Y. During Year 1, E had net earnings from self-employment from Business X of $35,000. During Year 1, E also had $300,000 of trading gains, which are gross income described in §1.1411–4(a)(1) and $40,000 of expenses described in §1.1411–4(f)(2)(ii) from Business Y. E's $300,000 of gross income from Business Y is excluded from net earnings from self-employment and self-employment income pursuant to sections 475(f)(1)(D) and 1402(a)(3)(A). E's $40,000 of deductions from Business Y reduce E's $35,000 of net earnings from self-employment from Business X to $0. Pursuant to paragraph (b) of this section and §1.1411–4(f)(2)(ii), the remaining $5,000 of deductions from Business Y are taken into account in determining E's net investment income (by reducing E's gross income of $300,000 from Business Y to $295,000) for purposes of section 1411.

(d) *Effective/applicability date.* This section applies to taxable years beginning after December 31, 2013. However, taxpayers may apply this section to taxable years beginning after December 31, 2012, in accordance with §1.1411–1(f).

[T.D. 9644, 78 FR 72424, Dec. 2, 2013]

§1.1411–10 Controlled foreign corporations and passive foreign investment companies.

(a) *In general.* This section provides rules that apply to an individual, estate, or trust that is a United States shareholder of a controlled foreign corporation (CFC), or that is a United States person that directly or indirectly owns an interest in a passive foreign investment company (PFIC). In addition, this section provides rules that apply to an individual, estate, or

trust that owns an interest in a domestic partnership or an S corporation that is either a United States shareholder of a CFC or that has made an election under section 1295 to treat a PFIC as a qualified electing fund (QEF). References in this section to an election under paragraph (g) of this section being in effect relate to an election that is applicable to the person that is determining the section 1411 consequences with respect to holding a particular CFC or QEF.

(b) *Amounts derived from a trade or business described in §1.1411–5*—(1) *In general*. Except as provided in paragraph (b)(2) of this section, an amount included in gross income under section 951(a) or section 1293(a) that is also income derived from a trade or business described in section 1411(c)(2) and §1.1411–5 (applying the relevant rules in §1.1411–4(b)) is taken into account as net investment income under section 1411(c)(1)(A)(ii) and §1.1411–4(a)(1)(ii) for purposes of section 1411 and the regulations thereunder when it is taken into account for purposes of chapter 1, and the rules in paragraphs (c) through (g) of this section do not apply to that amount. For purposes of section 1411 and the regulations thereunder, an amount included in gross income under section 1296(a) that is also income derived from a trade or business described in section 1411(c)(2) and §1.1411–5 (applying the relevant rules in §1.1411–4(b)), is net investment income within the meaning of section 1411(c)(1)(A)(ii) and §1.1411–4(a)(1)(ii), and the rules in paragraph (c)(2)(ii) of this section do not apply to that amount.

(2) *Coordination rule for changes in trade or business status*. With respect to stock of a CFC or QEF for which an election under paragraph (g) of this section is not in effect, the rules in paragraphs (c) through (f) of this section apply to a distribution of earnings and profits described in paragraph (c)(1)(i)(A) of this section that was not taken into account as net investment income under paragraph (b) of this section.

(c) *Calculation of net investment income*—(1) *Dividends*. For purposes of section 1411(c)(1)(A)(i) and §1.1411–4(a)(1)(i), net investment income is calculated by taking into account the amount of dividends described in this paragraph (c)(1).

(i) *Distributions of previously taxed earnings and profits*—(A) *Rules when an election under paragraph (g) of this section is not in effect with respect to the shareholder*—(*1*) *General rule*. Except as otherwise provided in this paragraph (c)(1)(i), with respect to stock of a CFC or QEF for which an election under paragraph (g) of this section is not in effect, a distribution of earnings and profits that is not treated as a dividend for chapter 1 purposes under section 959(d) or section 1293(c) is a dividend for purposes of section 1411(c)(1)(A)(i) and §1.1411–4(a)(1)(i) if the distribution is attributable to amounts that are or have been included in gross income for chapter 1 purposes under section 951(a) or section 1293(a) in a taxable year beginning after December 31, 2012. Solely, for this purpose, distributions of earnings and profits attributable to amounts that are or have been included in gross income for chapter 1 purposes under section 951(a) or section 1293(a) are considered first attributable to those earnings and profits, if any, derived from the current taxable year, and then from prior taxable years beginning with the most recent prior taxable year, and with respect to amounts included under section 951(a), without regard to whether the earnings and profits are described in section 959(c)(1) or section 959(c)(2).

(*2*) *Exception for distributions attributable to earnings and profits previously taken into account for purposes of section 1411*. A distribution of earnings and profits that is not treated as a dividend for chapter 1 purposes under section 959(d) or section 1293(c) is not treated as a dividend for purposes of section 1411(c)(1)(A)(i) and §1.1411–4(a)(1)(i), to the extent that an individual, estate, or trust establishes, by providing information that is similar to, and in the same manner as, the information described in §1.959–1(d) (relating to previously taxed earnings and profits), that the distribution is attributable to—

(*i*) Amounts included in gross income by any person for chapter 1 purposes under section 951(a) or section 1293(a) that have been taken into account by

any person as net investment income by reason of paragraph (b) of this section or an election under paragraph (g) of this section; or

(*ii*) Amounts included in gross income by any person as a dividend pursuant to section 1248(a) that, by reason of paragraph (c)(3)(ii) of this section, have been taken into account by any person as net investment income under section 1411(c)(1)(A)(i) and § 1.1411–4(a)(1)(i).

(B) *Rule when an election under paragraph (g) of this section is in effect with respect to the shareholder*. Except as otherwise provided in this paragraph (c)(1)(i), if an election under paragraph (g) of this section is in effect, a distribution of earnings and profits that is not treated as a dividend for chapter 1 purposes under section 959(d) or section 1293(c) is not treated as a dividend for purposes of section 1411(c)(1)(A)(i) and § 1.1411–4(a)(1)(i).

(C) *Special rule for certain distributions related to 2013 taxable years—(1) Scope*. The rule in this paragraph (c)(1)(i)(C) applies to individuals, estates, and trusts that were subject to section 1411 during a taxable year that began after December 31, 2012, and before January 1, 2014, and that satisfy all of the conditions set forth in paragraph (c)(1)(i)(C)(*2*) of this section. This rule also applies to all domestic partnerships and S corporations that satisfy all of the conditions set forth in paragraph (c)(1)(i)(C)(*2*) of this section.

(*2*) *Rule*. A distribution of earnings and profits from a CFC or QEF, with respect to which an election under paragraph (g) is in effect, that is not treated as a dividend for chapter 1 purposes under section 959(d) or section 1293(c) is a dividend for purposes of section 1411(c)(1)(A)(i) and § 1.1411–4(a)(1)(i) to the extent that—

(*i*) The distribution of earnings and profits is attributable to an amount included by an individual, estate, trust, domestic partnership, S corporation or common trust fund in gross income for chapter 1 purposes under section 951(a) or section 1293(a) with respect to the CFC or QEF for a taxable year that began after December 31, 2012, and before January 1, 2014;

(*ii*) The individual, estate, trust, domestic partnership, S corporation, or common trust fund made the election under paragraph (g) of this section with respect to the CFC or QEF in a taxable year that began after December 31, 2013; and

(*iii*) The individual, estate, trust, domestic partnership, S corporation, or common trust fund did not make the election described in paragraph (g)(4)(iii) of this section (concerning making an election under paragraph (g) of this section for a taxable year that begins before January 1, 2014).

(*3*) *Ordering rule*. Solely, for purposes of this paragraph (c)(1)(i)(C)(*3*), distributions of earnings and profits attributable to amounts that have been included in gross income for chapter 1 purposes under section 951(a) or section 1293(a) are considered first attributable to the earnings and profits derived from a taxable year that began after December 31, 2012, and before January 1, 2014.

(ii) *Excess distributions that constitute dividends*. To the extent an excess distribution within the meaning of section 1291(b) constitutes a dividend within the meaning of section 316(a), the amount is included in net investment income for purposes of section 1411(c)(1)(A)(i) and § 1.1411–4(a)(1)(i).

(2) *Net gain*. For purposes of section 1411(c)(1)(A)(iii) and § 1.1411–4(a)(1)(iii), the rules in this paragraph (c)(2) apply in determining net gain attributable to the disposition of property.

(i) *Gains treated as excess distributions*. Gains treated as excess distributions under section 1291(a)(2) are included in determining net gain attributable to the disposition of property for purposes of section 1411(c)(1)(A)(iii) and § 1.1411–4(a)(1)(iii).

(ii) *Inclusions and deductions with respect to section 1296 mark to market elections*. Amounts included in gross income under section 1296(a)(1) and amounts allowed as a deduction under section 1296(a)(2) are taken into account in determining net gain attributable to the disposition of property for purposes of section 1411(c)(1)(A)(iii) and § 1.1411–4(a)(1)(iii).

(iii) *Gain or loss attributable to the disposition of stock of CFCs and QEFs*. With respect to stock of a CFC or QEF for which an election under paragraph (g)

of this section is not in effect, for purposes of calculating the net gain under §§ 1.1411–4(a)(1)(iii) and 1.1411–4(d) that is attributable to the direct or indirect disposition of that stock (including for purposes of determining gain or loss on the direct or indirect disposition of that stock by a domestic partnership, S corporation, or common trust fund), basis is determined in accordance with the provisions of paragraph (d) of this section.

(iv) *Gain or loss attributable to the disposition of interests in domestic partnerships or S corporations that own directly or indirectly stock of CFCs or QEFs.* With respect to stock of a CFC or QEF for which an election under paragraph (g) of this section is not in effect, for purposes of calculating the net gain under §§ 1.1411–4(a)(1)(iii) and 1.1411–4(d) that is attributable to the disposition of an interest in a domestic partnership or S corporation that directly or indirectly owns that stock, basis is determined in accordance with the provisions of paragraph (d) of this section.

(3) *Application of section 1248.* With respect to stock of a CFC or QEF for which an election under paragraph (g) of this section is not in effect, for purposes of section 1411 and § 1.1411–4—

(i) In determining the gain recognized on the sale or exchange of stock of a foreign corporation for section 1248(a) purposes, basis is determined in accordance with the provisions of paragraph (d) of this section; and

(ii) Section 1248(a) applies without regard to the exclusion for certain earnings and profits under sections 1248(d)(1) and (d)(6), except that those exclusions will apply with respect to the earnings and profits of a foreign corporation that are attributable to:

(A) Amounts taken into account as net investment income under paragraph (b) of this section; and

(B) Amounts previously included in gross income for chapter 1 purposes under section 951(a) or section 1293(a) in a taxable year beginning before December 31, 2012, and that have not yet been distributed. For this purpose, the determination of whether earnings and profits that are attributable to amounts previously taxed in a taxable year beginning before December 31, 2012, have been distributed is determined based on the rules described in paragraph (c)(1)(i) of this section.

(4) *Amounts distributed by an estate or trust.* Net investment income of a beneficiary of an estate or trust includes the beneficiary's share of distributable net income, as described in sections 652 and 662 and as modified by paragraph (f) of this section, to the extent that the beneficiary's share of distributable net income includes items that, if they had been received directly by the beneficiary, would have been described in this paragraph (c).

(5) *Properly allocable deductions*—(i) *General rule.* For purposes of section 1411(c)(1)(B) and § 1.1411–4(f), the section 163(d)(1) investment expense deduction may be calculated by—

(A) Increasing the amount of investment income determined for chapter 1 purposes under section 163(d)(4)(B) by the amount of dividends described in § 1.1411–10(c) that are derived from a CFC or QEF with respect to which an election under paragraph (g) of this section is not in effect;

(B) Decreasing the amount of investment income determined for chapter 1 purposes under section 163(d)(4)(B) by the amount included in gross income for chapter 1 purposes under section 951(a) or section 1293(a) that is attributable to a CFC or QEF with respect to which an election under paragraph (g) of this section is not in effect; and

(C) Increasing or decreasing, as applicable, the amount of investment income for chapter 1 purposes under section 163(d)(4)(B) by the difference between the amount calculated with respect to a disposition under paragraphs (c)(2)(iii) and (c)(2)(iv) of this section and the amount of the gain or loss attributable to the relevant disposition as calculated for chapter 1 purposes.

(ii) *Additional rules.* For purposes of section 1411(c)(1)(B) and § 1.1411–4(f), if the method of calculation described in paragraph (c)(5)(i) of this section is applied:

(A) The amount of investment interest not allowed as a deduction under section 163(d)(2) must be calculated consistent with the method of calculation described in paragraph (c)(5)(i).

(B) The method of calculation must be adopted by an individual, estate, or trust no later than the first year in

which the individual, estate, or trust is subject to section 1411.

(C) The method of calculation must be applied with respect to all CFCs and QEFs for all taxable years with respect to which an election under paragraph (g) of this section is not in effect.

(D) A method of calculation under this paragraph is a method of accounting, which must be applied consistently, and may only be changed by the taxpayer by securing the consent of the Commissioner in accordance with §1.446–1(e) and following the administrative procedures issued under §1.446–1(e)(3)(ii).

(d) *Conforming basis adjustments*—(1) *Basis adjustments under sections 961 and 1293*—(i) *Stock held by individuals, estates, or trusts.* With respect to stock of a CFC or QEF which is held by an individual, estate, or trust, either directly or indirectly through one or more entities each of which is foreign, for which an election under paragraph (g) of this section is not in effect—

(A) The basis increases made pursuant to sections 961(a) and 1293(d) for amounts included in gross income for chapter 1 purposes under sections 951(a) and 1293(a) in taxable years beginning after December 31, 2012, are not taken into account for purposes of section 1411 and the regulations thereunder; and

(B) The basis decreases made pursuant to sections 961(b) and 1293(d) attributable to amounts treated as dividends for purposes of section 1411 under paragraph (c)(1)(i) of this section are not taken into account for purposes of section 1411 and the regulations thereunder.

(ii) *Stock held by domestic partnerships or S corporations*—(A) *Rule when an election under paragraph (g) of this section is not in effect.* The rules of this paragraph (d)(1)(ii)(A) apply with respect to stock of a CFC or QEF held directly by a domestic partnership or S corporation, or indirectly through one or more entities each of which is foreign, for which an election under paragraph (g) of this section is not in effect. If an individual, estate, or trust is a shareholder of an S corporation, or if an individual, estate, or trust directly, or through one or more tiers of passthrough entities (including an S corporation), owns an interest in a domestic partnership, the S corporation or domestic partnership, as the case may be, will not take into account for purposes of section 1411 and the regulations thereunder the basis increases made by the domestic partnership or S corporation pursuant to sections 961(a) and 1293(d) for amounts included in gross income for chapter 1 purposes under sections 951(a) and 1293(a) for taxable years beginning after December 31, 2012, and the basis decreases made by the domestic partnership or S corporation pursuant to sections 961(b) and 1293(d) attributable to amounts treated as dividends for purposes of section 1411 under paragraph (c)(1)(i) of this section (the section 1411 recalculated basis). If the domestic partnership or S corporation disposes of the stock of a CFC or QEF, the section 1411 recalculated basis will be used to determine the distributive share or pro rata share of the gain or loss for purposes of section 1411 for partners or shareholders.

(B) *Rules when an election under paragraph (g) of this section is in effect.* If an election under paragraph (g) of this section is in effect with respect to stock of a CFC or QEF held directly or indirectly by a domestic partnership or S corporation, the partner's distributive share or the shareholder's pro rata share of the gain or loss for purposes of section 1411 is the same as the distributive share or pro rata share of the gain or loss for purposes of chapter 1. See *Example 6* of paragraph (h) of this section.

(2) *Special rules for partners that own interests in domestic partnerships that own directly or indirectly stock of CFCs or QEFs.* The rules of this paragraph (d)(2) apply with respect to stock of a CFC or QEF for which an election under paragraph (g) of this section is not in effect, and that is held by a domestic partnership, either directly or indirectly through one or more entities each of which is foreign. In such a case, the basis increases provided under section 705(a)(1)(A) to the partners for purposes of chapter 1 that are attributable to amounts that the domestic partnership includes or included in gross income under section 951(a) or section 1293(a)

for a taxable year beginning after December 31, 2012, are not taken into account for purposes of section 1411. Instead, each partner's adjusted basis in the partnership interest is increased by its share of any distributions to the partnership from the CFC or QEF that are treated as dividends for purposes of section 1411 under paragraph (c)(1)(i) of this section. Similar rules apply when the stock of the CFC or QEF is held in a tiered partnership structure. For purposes of determining net investment income under section 1411 and the regulations thereunder, the partner's adjusted basis in the partnership interest as calculated under this paragraph (d)(2) is used to determine all tax consequences related to tax basis (for example, loss limitation rules and the characterization of partnership distributions).

(3) *Special rules for S corporation shareholders that own interests in S corporations that own directly or indirectly stock of CFCs or QEFs.* The rules of this paragraph (d)(3) apply with respect to stock of a CFC or QEF for which an election under paragraph (g) of this section is not in effect, and that is held by an S corporation, directly or indirectly through one or more entities each of which is foreign. In such case, the basis increases provided in section 1367(a)(1)(A) to its shareholders for chapter 1 purposes that are attributable to amounts that the S corporation includes or included in gross income for chapter 1 purposes under section 951(a) or section 1293(a) for taxable years beginning after December 31, 2012, are not taken into account for purposes of section 1411. Instead, each shareholder's adjusted basis of stock in the S corporation is increased by its share of the distributions to the S corporation from the CFC or QEF that are treated as dividends for purposes of section 1411 under paragraph (c)(1)(i) of this section. Similar rules apply when the S corporation holds an interest in a CFC or QEF through a partnership. For purposes of determining net investment income under section 1411 and the regulations thereunder, the shareholder's adjusted basis in the stock of the S corporation as calculated under this paragraph (d)(3) is used to determine all tax consequences related to tax basis (for example, loss limitation rules and the characterization of S corporation distributions).

(4) *Special rules for participants in common trust funds.* Rules similar to the rules in paragraphs (d)(2) and (3) of this section apply to ownership interests in common trust funds (as defined in section 584).

(e) *Conforming adjustments to modified adjusted gross income and adjusted gross income*—(1) *Individuals.* Solely for purposes of section 1411(a)(1)(B)(i) and the regulations thereunder, the term *modified adjusted gross income* means modified adjusted gross income as defined in §1.1411–2(c)(1)—

(i) Increased by amounts included in net investment income under paragraphs (c)(1)(i), (c)(1)(ii), (c)(2)(i), and (c)(4) of this section that are not otherwise included in gross income for chapter 1 purposes;

(ii) Increased or decreased, as applicable, by the difference between the amount calculated with respect to a disposition under paragraphs (c)(2)(iii) and (iv) of this section and the amount of the gain or loss attributable to the relevant disposition as calculated for chapter 1 purposes;

(iii) Decreased by any amount included in gross income for chapter 1 purposes under section 951(a) or section 1293(a) attributable to a CFC or QEF with respect to which no election under paragraph (g) of this section is in effect; and

(iv) To the extent the section 163(d)(1) investment interest expense deduction is calculated using the method of calculation set forth in paragraph (c)(5) of this section and the deduction is taken into account under §1.1411–4(f)(2), increased or decreased, as appropriate, by the difference between the amount of the section 163(d)(1) investment interest expense deduction calculated under paragraph (c)(5) of this section and the amount calculated for chapter 1 purposes.

(2) *Estates and trusts.* Solely for purposes of section 1411(a)(2)(B)(i) and the regulations thereunder, the term *adjusted gross income* means adjusted gross income as defined in §1.1411–3(a)(1)(ii)(B)(*1*) adjusted by the following amounts to the extent those

amounts are not distributed by the estate or trust—

(i) Increased by amounts included in net investment income under paragraphs (c)(1)(i), (c)(1)(ii), (c)(2)(i), and (c)(4) of this section that are not otherwise included in gross income for chapter 1 purposes;

(ii) Increased or decreased, as applicable, by the difference between the amount calculated with respect to a disposition under paragraphs (c)(2)(iii) and (iv) of this section and the amount of the gain or loss attributable to the relevant disposition as calculated for chapter 1 purposes;

(iii) Decreased by any amount included in gross income for chapter 1 purposes under section 951(a) or section 1293(a) attributable to a CFC or QEF with respect to which no election under paragraph (g) of this section is in effect; and

(iv) To the extent the section 163(d)(1) investment interest expense deduction is calculated using the method of calculation set forth in paragraph (c)(5) of this section and taken into account under §1.1411–4(f)(2), increased or decreased, as appropriate, by the difference between the amount of the section 163(d)(1) investment interest expense deduction calculated under paragraph (c)(5) of this section and the amount calculated for chapter 1 purposes.

(f) *Application to estates and trusts.* All of the items described in paragraph (c) of this section are included in the net investment income of an estate or trust or its beneficiaries. The amounts described in paragraphs (e)(2)(i) through (iv) of this section, regardless of whether the estate or trust receives those amounts directly or indirectly through another estate or trust, increase or decrease, as applicable, the estate's or trust's distributable net income for purposes of section 1411. The estate or trust, or the beneficiaries thereof, must take those amounts into account in a manner reasonably consistent with the general operating rules for estates and trusts in §1.1411–3 and subchapter J in computing the undistributed net investment income of the estate or trust and the net investment income of the beneficiaries.

(g) *Election with respect to CFCs and QEFs*—(1) *Effect of election.* If an election under paragraph (g) of this section is made with respect to a CFC or QEF, amounts included in gross income for chapter 1 purposes under section 951(a) or section 1293(a)(1)(A) with respect to the CFC or QEF in taxable years beginning with the taxable year for which the election is made are treated as net investment income for purposes of §1.1411–4(a)(1)(i), and amounts included in gross income under section 1293(a)(1)(B) with respect to the QEF in taxable years beginning with the taxable year for which the election is made are taken into account in calculating net gain attributable to the disposition of property under §1.1411–4(a)(1)(iii). See paragraphs (c)(1)(i)(B) and (c)(1)(i)(C) of this section for the effect of this election on certain distributions of previously taxed earnings and profits.

(2) *Years to which election applies*—(i) *In general.* An election under paragraph (g) of this section applies to the taxable year for which it is made and all subsequent taxable years, and applies to all subsequently acquired interests in the CFC or QEF. An election under paragraph (g) of this section is irrevocable.

(ii) *Termination of interest in CFC or QEF.* Complete termination of a person's interest in the CFC or QEF does not terminate the person's election under paragraph (g) of this section with respect to the CFC or QEF. Thus, if the person reacquires stock of the CFC or QEF, that stock is considered to be stock for which an election under paragraph (g) of this section has been made and is in effect.

(iii) *Termination of partnership.* If a domestic partnership that makes the election under paragraph (g) of this section is terminated pursuant to section 708(b)(1)(B), the election is binding on the new partnership.

(3) *Who may make the election.* An individual, estate, trust, domestic partnership, S corporation, or common trust fund may make an election under paragraph (g) of this section with respect to each CFC or QEF that it holds directly or indirectly through one or more entities, each of which is foreign. In addition, an individual, estate,

trust, domestic partnership, S corporation, or common trust fund may make an election under paragraph (g) of this section with respect to a CFC or QEF that it holds indirectly through a domestic partnership, S corporation, estate, trust, or common trust fund if the domestic partnership, S corporation, estate, trust, or common trust fund does not make the election. The election, if made, for an estate or trust must be made by the fiduciary of that estate or trust.

(4) *Time and manner for making the election*—(i) *Individuals, estates, and trusts*—(A) *General rule.* Except as otherwise provided in this paragraph, in order for an election under paragraph (g) of this section by an individual, estate, or trust (other than a CRT) with respect to a CFC or QEF to be effective, the election must be made no later than the first taxable year beginning after December 31, 2013, during which the individual, estate, or trust—

(*1*) Includes an amount in gross income for chapter 1 purposes under section 951(a) or section 1293(a) with respect to the CFC or QEF; and

(*2*) Is subject to tax under section 1411 or would be subject to tax under section 1411 if the election were made with respect to the stock of the CFC or QEF.

(B) *Special rule for charitable remainder trusts (CRTs).* Except as otherwise provided in this paragraph, in order for an election under paragraph (g) of this section by a CRT with respect to a CFC or QEF to be effective, the election must be made no later than the first taxable year beginning after December 31, 2013, during which the CRT includes an amount in gross income for chapter 1 purposes under section 951(a) or section 1293(a) with respect to the CFC or QEF.

(ii) *Certain domestic passthrough entities.* Except as otherwise provided in this paragraph, in order for an election under paragraph (g) of this section by a domestic partnership, S corporation, or common trust fund with respect to a CFC or a QEF to be effective, the election must be made no later than the first taxable year beginning after December 31, 2013, during which the domestic partnership S corporation, or common trust fund—

(A) Includes an amount in gross income for chapter 1 purposes under section 951(a) or section 1293(a) with respect to the CFC or QEF; and

(B) Has a direct or indirect owner that is subject to tax under section 1411 or would be subject to tax under section 1411 if the election were made.

(iii) *Taxable years that begin before January 1, 2014*—(A) *Individuals, estates, or trusts.* An individual, estate, or trust may make an election under paragraph (g) of this section for a taxable year that begins before January 1, 2014.

(B) *Certain domestic passthrough entities.* A domestic partnership, S corporation, or common trust fund may make an election under paragraph (g) of this section for a taxable year that begins before January 1, 2014, provided that all of its partners, shareholders, or participants, as the case may be, consent to the election. In the case of a partner, shareholder, or participant that is a partnership, S corporation, or common trust fund, all of the partners, shareholders, and participants also must consent to the election.

(iv) *Time for making election.* In all cases, the election under paragraph (g) of this section must be made in the manner prescribed by forms, instructions, or in other guidance on the individual's, estate's, trust's, domestic partnership's, S corporation's, or common trust fund's original or amended return for the taxable year for which the election is made. An election can be made on an amended return only if the taxable year for which the election is made, and all taxable years that are affected by the election, are not closed by the period of limitations on assessments under section 6501. An individual, estate, trust, domestic partnership, S corporation, or common trust fund may not seek an extension of time to make the election under any other provision of the law, including § 301.9100 of this chapter.

(h) *Examples.* The following examples illustrate the rules of this section. In each example, unless otherwise indicated, the individuals, the foreign corporation (FC), the QEF (QEF), and the partnership (PRS) use a calendar taxable year. Further, the gross income or gain with respect to an interest in FC

is not derived in a trade or business described in § 1.1411–5.

Example 1. (i) *Facts.* A, a United States citizen, is the sole shareholder of FC, a controlled foreign corporation (within the meaning of section 957). A is a United States shareholder (within the meaning of section 951(b)) with respect to FC. In 2012, A includes $40,000 in gross income for chapter 1 purposes under section 951(a)(1)(A) with respect to FC. On December 31, 2012, A's basis in the stock of FC for chapter 1 purposes is $500,000, which includes an increase to basis under section 961(a) of $40,000. The amount of FC's earnings and profits that are described in section 959(c)(2) is $40,000, the amount of FC's earnings and profits that are described in section 959(c)(3) is $20,000, and FC does not have any earnings and profits that are described in section 959(c)(1). No election is made under paragraph (g) of this section. During 2013, A does not include any amounts in income under section 951(a) with respect to FC, A does not receive any distributions from FC, and there is no change in the amount of FC's earnings and profits. In 2014, A includes $10,000 in gross income for chapter 1 purposes under section 951(a)(1)(A) with respect to FC. As a result, A's basis in the stock of FC for chapter 1 purposes increases by $10,000 to $510,000 pursuant to section 961(a). During 2015, FC distributes $30,000 to A, which is not treated as a dividend for purposes of chapter 1 under section 959(d). As a result, A's basis in the stock of FC for chapter 1 purposes is decreased by $30,000 to $480,000 pursuant to section 961(b).

(ii) *Results for section 1411 purposes.* In 2014, A does not include the $10,000 section 951(a) income inclusion in A's net investment income under section 1411(c)(1)(A)(i) and § 1.1411–4(a)(1)(i). Pursuant to paragraph (e)(1)(iii) of this section, A decreases A's modified adjusted gross income for section 1411 purposes by $10,000 in 2014, and pursuant to paragraph (d)(1)(i) of this section, A's adjusted basis is not increased by $10,000 and remains at $500,000. In 2015, pursuant to paragraph (c)(2)(i) of this section, A includes $10,000 of the distribution of previously taxed earnings and profits as a dividend for purposes of determining A's net investment income because $10,000 of the $30,000 distribution is attributable to amounts that A included in gross income for chapter 1 purposes under section 951(a) in a tax year that began after December 31, 2012. Pursuant to paragraph (e)(1)(i) of this section, A increases A's modified adjusted gross income for section 1411 purposes by $10,000 in 2015. Under paragraph (d)(1)(i) of this section, A's adjusted basis is not decreased by the $10,000 that is treated as a dividend for section 1411 purposes, and thus, A's adjusted basis in FC for section 1411 purposes is decreased under section 961 only by $20,000 to $480,000.

Example 2. (i) *Facts.* Same facts as *Example 1.* In addition, during 2016, A includes $15,000 in gross income for chapter 1 purposes under section 951(a)(1)(A) with respect to FC. As a result, A's basis in the stock of FC for chapter 1 purposes increases by $15,000 to $495,000 pursuant to section 961(a). During 2017, A sells all of A's shares of FC for $550,000 and, prior to the application of section 1248, recognizes $55,000 ($550,000 minus $495,000) of long-term capital gain for chapter 1 purposes. For purposes of calculating the amount included in income as a dividend pursuant to section 1248(a) for chapter 1 purposes, the earnings and profits of FC attributable to A's shares in FC which were accumulated after December 31,1962 and during the period which A held the stock while FC was a controlled foreign corporation is $55,000, $35,000 of which is excluded pursuant to section 1248(d)(1). Therefore, after the application of section 1248, for chapter 1 purposes, upon the sale of the FC stock, A recognizes $35,000 of long-term capital gain and a $20,000 dividend.

(ii) *Results for section 1411 purposes.* (A) In 2016, A does not include the $15,000 section 951(a)(1)(A) income inclusion in A's net investment income under section 1411(c)(1)(A)(i) and § 1.1411–1(a)(1)(i). Pursuant to paragraph (e)(1)(ii) of this section, A decreases A's modified adjusted gross income for section 1411 purposes by $15,000, and, pursuant to paragraph (d)(1)(i) of this section, A's adjusted basis remains at $480,000.

(B) During 2017, prior to the application of section 1248, A recognizes $70,000 ($550,000 minus $480,000) of gain for section 1411 purposes. Pursuant to paragraph (c)(3) of this section, for section 1411 purposes, section 1248(a) applies to the gain on the sale of FC calculated for section 1411 purposes ($70,000) and section 1248(d)(1) does not apply, except with respect to the $20,000 of earnings and profits of FC that are attributable to amounts previously included in income for chapter 1 purposes under section 951 for a taxable year beginning before December 31, 2012. Accordingly, for purposes of calculating the amount of income includible as a dividend under section 1248(a), A has $55,000 of earnings and profits, $20,000 of which is excluded pursuant to section 1248(d)(1). Therefore, after the application of section 1248, for section 1411 purposes A has $35,000 of long-term capital gain and a $35,000 dividend. For purposes of calculating net investment income in 2017, A includes $35,000 as a dividend under section 1411(c)(1)(A)(i) and § 1.1411–4(a)(1)(i) and $35,000 as a gain under section 1411(c)(1)(A)(iii) and § 1.1411–4(a)(1)(iii).

Example 3. (i) *Facts.* Same facts as *Example 2,* except that A timely makes an election under paragraph (g)(4)(i) of this section for 2014 (and thus for all subsequent years).

(ii) *Results for section 1411 purposes.* A does not have any adjustments to A's modified

adjusted gross income for section 1411 purposes for 2014, 2015, 2016 or 2017 because the election under paragraph (g)(4)(i) of this section was timely made. Pursuant to paragraph (g)(2) of this section, for purposes of calculating A's net investment income in 2014, the $10,000 that A included in income for chapter 1 purposes under section 951(a) is net investment income for purposes of section 1411(c)(1)(A)(i) and §1.1411–4(a)(1)(i). A has no amount of net investment income with respect to FC in 2015. Pursuant to paragraph (g)(2) of this section, for purposes of calculating A's net investment income in 2016, the $15,000 that A included in income for chapter 1 purposes under section 951(a) is net investment income for purposes of section 1411(c)(1)(A)(i) and §1.1411–4(a)(1)(i). For purposes of calculating A's net investment income in 2017, the amount of gain on the disposition of the FC shares is the same as the amount calculated for chapter 1 purposes. Applying section 1248, A includes $35,000 as a gain under section 1411(c)(1)(A)(iii) and §1.1411–4(a)(1)(iii), and $20,000 as a dividend under section 1411(c)(1)(A)(i) and §1.1411–4(a)(1)(i).

Example 4. Domestic partnership holding QEF stock. (i) *Facts.* (A) C, a United States citizen, owns a 50% interest in PRS, a domestic partnership. D, a United States citizen, and E, a United States citizen, each own a 25% interest in PRS. All allocations of partnership income and losses are pro rata based on ownership interests. PRS owns an interest in QEF, a foreign corporation that is a passive foreign investment company (within the meaning of section 1297(a)). PRS, a United States person, made an election under section 1295 with respect to QEF applicable to the first year of its holding period in QEF. As of December 31, 2012, for chapter 1 purposes, C's basis in his partnership interest is $100,000, D's basis in his partnership interest is $50,000, E's basis in his partnership interest is $50,000, and PRS's adjusted basis in its QEF stock is $80,000, which includes an increase in basis under section 1293(d) of $40,000. As of December 31, 2012, the amount of QEF's earnings that have been included in income by PRS under section 1293(a), but have not been distributed by QEF, is $40,000. PRS also has cash of $60,000 and domestic C corporation stock with an adjusted basis of $60,000. During 2013, PRS does not include any amounts in income under section 1293(a) with respect to QEF, PRS does not receive any distributions from QEF, and there are no adjustments to the basis of C, D, or E in their interests in PRS.

(B) During 2014, PRS has income of $40,000 under section 1293(a) with respect to QEF and has no other partnership income. PRS does not make an election under paragraph (g) of this section.

(C) During 2015, QEF distributes $60,000 to PRS. PRS has no income for the year.

(ii) *Results for 2014.* (A) For chapter 1 purposes, as a result of the $40,000 income inclusion under section 1293(a), PRS's basis in its QEF stock is increased by $40,000 under section 1293(d)(1) to $120,000. Under §1.1293–1(c)(1) and section 702, C's, D's, and E's distributive shares of the section 1293(a) income inclusion are $20,000, $10,000, and $10,000, respectively. Under section 705(a)(1)(A), C increases his adjusted basis in his partnership interest by $20,000 to $120,000, and D and E each increase his adjusted basis in his partnership interest by $10,000 to $60,000.

(B) For section 1411 purposes, pursuant to paragraph (d)(1)(ii) of this section, PRS's basis in QEF is not increased by the $40,000 income inclusion (it remains at $80,000). Because PRS did not make an election under paragraph (g) of this section, C, D and E do not have net investment income with respect to the income inclusion, and pursuant to paragraph (d)(2) of this section, they do not increase their adjusted bases in their interests in PRS (each remains at $50,000). Pursuant to paragraph (e)(1)(ii) of this section, C reduces his modified adjusted gross income by $20,000, and D and E each reduce their modified adjusted gross income by $10,000.

(iii) *Results for 2015.* (A) For chapter 1 purposes, the distribution of $60,000 from QEF to PRS is not a dividend under section 1293(c), and PRS decreases its basis in QEF by $60,000 under section 1293(d)(2) to $60,000.

(B) Pursuant to paragraph (c)(1)(i) of this section, $40,000 of the distribution is a dividend for section 1411 purposes because PRS included $40,000 in gross income for chapter 1 purposes under section 1293(a) in a tax year that began after December 31, 2012. For section 1411 purposes, pursuant to paragraph (d)(1)(ii) of this section, section 1293(d) will not apply to reduce PRS's basis in QEF to the extent of the $40,000 of the distribution that is treated as a dividend under paragraph (c)(2)(i) of this section. Thus, PRS's basis in QEF is decreased only by $20,000 for purposes of section 1411 and is $60,000. The $40,000 distribution of previously taxed earnings and profits that is treated as a dividend for section 1411 purposes is allocated $20,000 to C, $10,000 to D, and $10,000 to E. Because PRS did not make an election under paragraph (g) of this section, pursuant to paragraph (c)(2)(i) of this section, C has $20,000 of net investment income, and D and E each has $10,000 of net investment income as a result of the distribution by QEF, and pursuant to paragraph (d)(2) of this section, C increases his adjusted basis in PRS by $20,000 to $120,000, and D and E each increases his adjusted basis in PRS by $10,000 to $60,000. Pursuant to paragraph (e)(1)(i) of this section, C increases his modified adjusted gross income by $20,000, and D and E each increases his modified adjusted gross income by $10,000.

Example 5. Sale of partnership interest. (i) *Facts.* Same facts as *Example 4.* In addition,

in 2016, D sells his entire interest in PRS to F for $100,000.

(ii) *Results for 2016*. For chapter 1 purposes, D has a gain of $40,000 ($100,000 minus $60,000). For section 1411 purposes, D has a gain of $40,000 ($100,000 minus $60,000), and thus, has net investment income of $40,000. No adjustments to modified adjusted gross income are necessary under paragraph (e) of this section.

Example 6. Domestic partnership's sale of QEF stock. (i) *Facts*. Same facts as *Example 4*. In addition, in 2016 PRS has income of $60,000 under section 1293(a) with respect to QEF, and in 2017, PRS sells its entire interest in QEF for $170,000.

(ii) *Results for 2016*. (A) For chapter 1 purposes, as a result of the $60,000 income inclusion under section 1293(a), PRS's basis in its QEF stock is increased by $60,000 under section 1293(d)(1) to $120,000. Under § 1.1293–1(c)(1) and section 702, C's, D's, and E's distributive shares of the section 1293(a) income inclusion are $30,000, $15,000, and $15,000 respectively. Under section 705(a)(1)(A), C increases his adjusted basis in his partnership interest by $30,000 to $150,000, and D and E each increases his adjusted basis in his partnership interest by $15,000 to $75,000.

(B) For section 1411 purposes, pursuant to paragraph (d)(1)(ii) of this section, PRS's basis in QEF is not increased by the $60,000 income inclusion (it remains at $60,000). Because PRS did not make an election under paragraph (g) of this section, C, D and E do not have net investment income with respect to the income inclusion, and pursuant to paragraph (d)(2) of this section, they do not increase their adjusted bases in their interests in PRS (C remains at $120,000, and D and E each remain at $60,000). Pursuant to paragraph (e)(1)(ii) of this section, C reduces his modified adjusted gross income by $30,000, and D and E each reduce their modified adjusted gross income by $15,000.

(iii) *Results for 2017*. (A) For chapter 1 purposes, PRS has a gain of $50,000 ($170,000 minus $120,000), which is allocated 50% ($25,000) to C, 25% ($12,500) to D, and 25% ($12,500) to E.

(B) Based on PRS's basis in the stock of QEF for section 1411 purposes, PRS has a gain for section 1411 purposes of $110,000 ($170,000 minus $60,000), which in the absence of an election by PRS under paragraph (g) of this section, results in gain of $55,000 to C, $27,500 to D, and $27,500 to E. Therefore, C has net investment income of $55,000, and D and E each have net investment income of $27,500. Pursuant to paragraph (e)(1)(ii) of this section, C increases his modified adjusted gross income by $30,000, and D and E each increase their modified adjusted gross income by $15,000.

(i) *Effective/applicability date*. This section applies to taxable years beginning after December 31, 2013. However, taxpayers may apply this section to taxable years beginning after December 31, 2012, in accordance with § 1.1411–1(f).

[T.D. 9644, 78 FR 72424, Dec. 2, 2013, as amended at 79 FR 18160, Apr. 1, 2014]

WITHHOLDING OF TAX ON NONRESIDENT ALIENS AND FOREIGN CORPORATIONS AND TAX-FREE COVENANT BONDS

NONRESIDENT ALIENS AND FOREIGN CORPORATIONS

§ 1.1441–0 Outline of regulation provisions for section 1441.

This section lists captions contained in §§ 1.1441–1 through 1.1441–9.

§ 1.1441–1 Requirement for the deduction and withholding of tax on payments to foreign persons.

(a) Purpose and scope.
(b) General rules of withholding.
(1) Requirement to withhold on payments to foreign persons.
(2) Determination of payee and payee's status.
(i) In general.
(ii) Payments to a U.S. agent of a foreign person.
(iii) Payments to wholly-owned entities.
(A) Foreign-owned domestic entity.
(B) Foreign entity.
(iv) Payments to a U.S. branch of certain foreign banks or foreign insurance companies.
(A) U.S. branch treated as a U.S. person in certain cases.
(B) Consequences to the withholding agent.
(C) Consequences to the U.S. branch.
(D) Definition of payment to a U.S. branch.
(E) Payments to other U.S. branches.
(v) Payments to a foreign intermediary.
(A) Payments treated as made to persons for whom the intermediary collects the payment.
(B) Payments treated as made to foreign intermediary.
(vi) Other payees.
(vii) Rules for reliably associating a payment with a withholding certificate or other appropriate documentation.
(A) Generally.
(B) Special rules applicable to a withholding certificate from a nonqualified intermediary or flow-through entity.
(C) Special rules applicable to a withholding certificate provided by a qualified intermediary that does not assume primary withholding responsibility.
(D) Special rules applicable to a withholding certificate provided by a qualified

intermediary that assumes primary withholding responsibility under chapter 3 of the Internal Revenue Code.

(E) Special rules applicable to a withholding certificate provided by a qualified intermediary that assumes primary Form 1099 reporting and backup withholding responsibility but not primary withholding under chapter 3.

(F) Special rules applicable to a withholding certificate provided by a qualified intermediary that assumes primary withholding responsibility under chapter 3 and primary Form 1099 reporting and backup withholding responsibility and a withholding certificate provided by a withholding foreign partnership.

(3) Presumptions regarding payee's status in the absence of documentation.

(i) General rules.

(ii) Presumptions of classification as individual, corporation, partnership, etc.

(A) In general.

(B) No documentation provided.

(C) Documentary evidence furnished for offshore account.

(iii) Presumption of U.S. or foreign status.

(A) Payments to exempt recipients.

(B) Scholarships and grants.

(C) Pensions, annuities, etc.

(D) Certain payments to offshore accounts.

(iv) Grace period.

(v) Special rules applicable to payments to foreign intermediaries.

(A) Reliance on claim of status as foreign intermediary.

(B) Beneficial owner documentation or allocation information is lacking or unreliable.

(C) Information regarding allocation of payment is lacking or unreliable.

(D) Certification that the foreign intermediary has furnished documentation for all of the persons to whom the intermediary certificate relates is lacking or unreliable.

(vi) U.S. branches.

(vii) Joint payees.

(A) In general.

(B) Special rule for offshore accounts.

(viii) Rebuttal of presumptions.

(ix) Effect of reliance on presumptions and of actual knowledge or reason to know otherwise.

(A) General rule.

(B) Actual knowledge or reason to know that amount of withholding is greater than is required under the presumptions or that reporting of the payment is required.

(x) Examples.

(4) List of exemptions from, or reduced rates of, withholding under chapter 3 of the Code.

(5) Establishing foreign status under applicable provisions of chapter 61 of the Code.

(6) Rules of withholding for payments by a foreign intermediary or certain U.S. branches.

(i) In general.

(ii) Example.

(7) Liability for failure to obtain documentation timely or to act in accordance with applicable presumptions.

(i) General rule.

(ii) Proof that tax liability has been satisfied.

(iii) Liability for interest and penalties.

(iv) Special effective date.

(v) Examples.

(8) Adjustments, refunds, or credits of overwithheld amounts.

(9) Payments to joint owners.

(c) Definitions.

(1) Withholding.

(2) Foreign and U.S. person.

(3) Individual.

(i) Alien individual.

(ii) Nonresident alien individual.

(4) Certain foreign corporations.

(5) Financial institution and foreign financial institution.

(6) Beneficial owner.

(i) General rule.

(ii) Special rules.

(A) General rule.

(B) Foreign partnerships.

(C) Foreign simple trusts and foreign grantor trusts.

(D) Other foreign trusts and foreign estates.

(7) Withholding agent.

(8) Person.

(9) Source of income.

(10) Chapter 3 of the Code.

(11) Reduced rate.

(12) Payee.

(13) Intermediary.

(14) Nonqualified intermediary.

(15) Qualified intermediary.

(16) Withholding certificate.

(17) Documentary evidence; other appropriate documentation.

(18) Documentation.

(19) Payor.

(20) Exempt recipient.

(21) Non-exempt recipient.

(22) Reportable amounts.

(23) Flow-through entity.

(24) Foreign simple trust.

(25) Foreign complex trust.

(26) Foreign grantor trust.

(27) Partnership.

(28) Nonwithholding foreign partnership.

(29) Withholding foreign partnership.

(d) Beneficial owner's or payee's claim of U.S. status.

(1) In general.

(2) Payments for which a Form W–9 is otherwise required.

(3) Payments for which a Form W–9 is not otherwise required.

(4) When a payment to an intermediary or flow-through entity may be treated as made to a U.S. payee.

(e) Beneficial owner's claim of foreign status.
(1) Withholding agent's reliance.
(i) In general.
(ii) Payments that a withholding agent may treat as made to a foreign person that is a beneficial owner.
(A) General rule.
(B) Additional requirements.
(2) Beneficial owner withholding certificate.
(i) In general.
(ii) Requirements for validity of certificate.
(3) Intermediary, flow-through, or U.S. branch withholding certificate.
(i) In general.
(ii) Intermediary withholding certificate from a qualified intermediary.
(iii) Intermediary withholding certificate from a nonqualified intermediary.
(iv) Withholding statement provided by nonqualified Intermediary.
(A) In general.
(B) General requirements.
(C) Content of withholding statement.
(D) Alternative procedures.
(E) Notice procedures.
(v) Withholding certificate from certain U.S. branches.
(vi) Reportable amounts.
(4) Applicable rules.
(i) Who may sign the certificate.
(ii) Period of validity.
(A) Three-year period.
(B) Indefinite validity period.
(C) Withholding certificate for effectively connected income.
(D) Change in circumstances.
(iii) Retention of withholding certificate.
(iv) Electronic transmission of information.
(A) In general.
(B) Requirements.
(C) Special requirements for transmission of Forms W–8 by an intermediary. [Reserved]
(v) Electronic confirmation of taxpayer identifying number on withholding certificate.
(vi) Acceptable substitute form.
(vii) Requirement of taxpayer identifying number.
(viii) Reliance rules.
(A) Classification.
(B) Status of payee as an intermediary or as a person acting for its own account.
(ix) Certificates to be furnished for each account unless exception applies.
(A) Coordinated account information system in effect.
(B) Family of mutual funds.
(C) Special rule for brokers.
(5) Qualified intermediaries.
(i) General rule.
(ii) Definition of qualified intermediary.
(iii) Withholding agreement.
(A) In general.
(B) Terms of the withholding agreement.
(iv) Assignment of primary withholding responsibility.
(v) Withholding statement.
(A) General rule.
(B) Content of withholding statement.
(C) Withholding rate pools.
(f) Effective date.
(1) In general.
(2) Transition rules.
(i) Special rules for existing documentation.
(ii) Lack of documentation for past years.

§ 1.1441–2 Amounts subject to withholding.

(a) In general.
(b) Fixed or determinable annual or periodical income.
(1) In general.
(i) Definition.
(ii) Manner of payment.
(iii) Determinability of amount.
(2) Exceptions.
(3) Original issue discount.
(i) Amount subject to tax.
(ii) Amounts subject to withholding.
(4) Securities lending transactions and equivalent transactions.
(5) REMIC residual interests.
(c) Other income subject to withholding.
(d) Exceptions to withholding where no money or property is paid or lack of knowledge.
(1) General rule.
(2) Cancellation of debt.
(3) Satisfaction of liability following underwithholding by withholding agent.
(4) Withholding exemption inapplicable.
(e) Payment.
(1) General rule.
(2) Income allocated under section 482.
(3) Blocked income.
(4) Special rules for dividends.
(5) Certain interest accrued by a foreign corporation.
(6) Payments other than in U.S. dollars.
(f) Effective/applicability date.

§ 1.1441–3 Determination of amounts to be withheld.

(a) Withholding on gross amount.
(b) Withholding on payments on certain obligations.
(1) Withholding at time of payment of interest.
(2) No withholding between interest payment dates.
(i) In general.
(ii) Anti-abuse rule.
(c) Corporate distributions.
(1) General rule.
(2) Exception to withholding on distributions.
(i) In general.
(ii) Reasonable estimate of accumulated and current earnings and profits on the date of payment.

(A) General rule.
(B) Procedures in case of underwithholding.
(C) Reliance by intermediary on reasonable estimate.
(D) Example.
(3) Special rules in the case of distributions from a regulated investment company.
(i) General rule
(ii) Reliance by intermediary on reasonable estimate.
(4) Coordination with withholding under section 1445.
(i) In general.
(A) Withholding under section 1441.
(B) Withholding under both sections 1441 and 1445.
(C) Coordination with REIT withholding.
(ii) Intermediary reliance rule.
(d) Withholding on payments that include an undetermined amount of income.
(1) In general.
(2) Withholding on certain gains.
(e) Payments other than in U.S. dollars.
(1) In general.
(2) Payments in foreign currency.
(f) Tax liability of beneficial owner satisfied by withholding agent.
(1) General rule.
(2) Example.
(g) Conduit financing arrangements
(h) Effective date.

§ 1.1441–4 Exemptions from withholding for certain effectively connected income and other amounts.

(a) Certain income connected with a U.S. trade or business.
(1) In general.
(2) Withholding agent's reliance on a claim of effectively connected income.
(i) In general.
(ii) Special rules for U.S. branches of foreign persons.
(A) U.S. branches of certain foreign banks or foreign insurance companies.
(B) Other U.S. branches.
(3) Income on notional principal contracts.
(i) General rule.
(ii) Exception for certain payments.
(b) Compensation for personal services of an individual.
(1) Exemption from withholding.
(2) Manner of obtaining withholding exemption under tax treaty.
(i) In general.
(ii) Withholding certificate claiming withholding exemption.
(iii) Review by withholding agent.
(iv) Acceptance by withholding agent.
(v) Copies of Form 8233.
(3) Withholding agreements.
(4) Final payments exemption.
(i) General rule.
(ii) Final payment of compensation for personal services.
(iii) Manner of applying for final payment exemption.
(iv) Letter to withholding agent.
(5) Requirement of return.
(6) Personal exemption.
(i) In general.
(ii) Multiple exemptions.
(iii) Special rule where both certain scholarship and compensation income are received.
(c) Special rules for scholarship and fellowship income.
(1) In general.
(2) Alternate withholding election.
(d) Annuities received under qualified plans.
(e) Per diem of certain alien trainees.
(f) Failure to receive withholding certificates timely or to act in accordance with applicable presumptions.
(g) Effective date.
(1) General rule.
(2) Transition rules.

§ 1.1441–5 Withholding on payments to partnerships, trusts, and estates.

(a) In general.
(b) Rules applicable to U.S. partnerships, trusts, and estates.
(1) Payments to U.S. partnerships, trusts, and estates.
(2) Withholding by U.S. payees.
(i) U.S. partnerships.
(A) In general.
(B) Effectively connected income of partners.
(ii) U.S. simple trusts.
(iii) U.S. complex trusts and U.S. estates.
(iv) U.S. grantor trusts.
(v) Subsequent distribution.
(c) Foreign partnerships.
(1) Determination of payee.
(i) Payments treated as made to partners.
(ii) Payments treated as made to the partnership.
(iii) Rules for reliably associating a payment with documentation.
(iv) Examples.
(2) Withholding foreign partnerships.
(i) Reliance on claim of withholding foreign partnership status.
(ii) Withholding agreement.
(iii) Withholding responsibility.
(iv) Withholding certificate from a withholding foreign partnership.
(3) Nonwithholding foreign partnerships.
(i) Reliance on claim of foreign partnership status.
(ii) Reliance on claim of reduced withholding by a partnership for its partners.
(iii) Withholding certificate from a nonwithholding foreign partnership.
(iv) Withholding statement provided by nonwithholding foreign partnership.
(v) Withholding and reporting by a foreign partnership.
(d) Presumption rules.

(1) In general.
(2) Determination of partnership's status as domestic or foreign in the absence of documentation.
(3) Determination of partners' status in the absence of certain documentation.
(4) Determination by a withholding foreign partnership of the status of its partners.
(e) Foreign trusts and estates.
(1) In general.
(2) Payments to foreign complex trusts and estates.
(3) Payees of payments to foreign simple trusts and foreign grantor trusts.
(i) Payments for which beneficiaries and owners are payees.
(ii) Payments for which trust is payee.
(4) Reliance on claim of foreign complex trust or foreign estate status.
(5) Foreign simple trust and foreign grantor trust.
(i) Reliance on claim of foreign simple trust or foreign grantor trust status.
(ii) Reliance on claim of reduced withholding by a foreign simple trust or foreign grantor trust for its beneficiaries or owners.
(iii) Withholding certificate from foreign simple trust or foreign grantor trust.
(iv) Withholding statement provided by a foreign simple trust or foreign grantor trust.
(v) Withholding foreign trusts.
(6) Presumption rules.
(i) In general.
(ii) Determination of status as U.S. or foreign trust or estate in the absence of documentation.
(iii) Determination of beneficiary or owner's status in the absence of certain documentation.
(f) Failure to receive withholding certificate timely or to act in accordance with applicable presumptions.
(g) Effective date.
(1) General rule.
(2) Transition rules.

§ 1.1441–6 Claim of reduced withholding under an income tax treaty.

(a) In general.
(b) Reliance on claim of reduced withholding under an income tax treaty.
(1) In general.
(2) Payment to fiscally transparent entity.
(i) In general.
(ii) Certification by qualified intermediary.
(iii) Dual treatment.
(iv) Examples.
(3) Certified TIN.
(4) Claim of benefits under an income tax treaty by a U.S. person.
(c) Exemption from requirement to furnish a taxpayer identifying number and special documentary evidence rules for certain income.
(1) In general.
(2) Income to which special rules apply.
(3) Certificate of residence.
(4) Documentary evidence establishing residence in the treaty country.
(i) Individuals.
(ii) Persons other than individuals.
(5) Statements regarding entitlement to treaty benefits.
(i) Statement regarding conditions under a limitation on benefits provision.
(ii) Statement regarding whether the taxpayer derives the income.
(d) Joint owners.
(e) Competent authority.
(f) Failure to receive withholding certificate timely.
(g) Special taxpayer identifying number rule for certain foreign individuals claiming treaty benefits.
(1) General rule.
(2) Special rule.
(3) Requirement that an ITIN be requested during the first business day following payment.
(4) Definition of unexpected payment.
(5) Examples.
(h) Effective dates.
(1) General rule.
(2) Transition rules.

§ 1.1441–7 General provisions relating to withholding agents.

(a) Withholding agent defined.
(1) In general.
(2) Examples.
(b) Standards of knowledge.
(1) In general.
(2) Reason to know.
(3) Financial institutions—limits on reason to know.
(4) Rules applicable to withholding certificates.
(i) In general.
(ii) Examples.
(5) Withholding certificate—establishment of foreign status.
(6) Withholding certificate—claim of reduced rate of withholding under treaty.
(7) Documentary evidence.
(8) Documentary evidence—establishment of foreign status.
(9) Documentary evidence—claim of reduced rate of withholding under treaty.
(10) Limits on reason to know—indirect account holders.
(11) Additional guidance.
(c) Authorized agent.
(1) In general.
(2) Authorized foreign agent.
(3) Notification.
(4) Liability of U.S. withholding agent.
(5) Filing of returns.
(d) United States obligations.
(e) Assumed obligations.
(f) Conduit financing arrangements.
(g) Effective date.

§ 1.1441–8 Exemption from withholding for payments to foreign governments, international organizations, foreign central banks of issue, and the Bank for International Settlements.

(a) Foreign governments.
(b) Reliance on claim of exemption by foreign government.
(c) Income of a foreign central bank of issue or the Bank for International Settlements.
(1) Certain interest income.
(2) Bankers' acceptances.
(d) Exemption for payments to international organizations.
(e) Failure to receive withholding certificate timely and other applicable procedures.
(f) Effective date.
(1) In general.
(2) Transition rules.

§ 1.1441–9 Exemption from withholding on exempt income of a foreign tax-exempt organization, including foreign private foundations.

(a) Exemption from withholding for exempt income.
(b) Reliance on foreign organization's claim of exemption from withholding.
(1) General rule.
(2) Withholding certificate.
(3) Presumptions in the absence of documentation.
(4) Reason to know.
(c) Failure to receive withholding certificate timely and other applicable procedures.
(d) Effective date.
(1) In general.
(2) Transition rules.

[T.D. 8734, 62 FR 53421, Oct. 14, 1997, as amended by T.D. 8881, 66 FR 32168, May 22, 2000; T.D. 9023, 67 FR 70312, Nov. 22, 2002; T.D. 9272, 71 FR 43366, Aug. 1, 2006; T.D. 9415, 73 FR 40172, July 14, 2008]

§ 1.1441–1 Requirement for the deduction and withholding of tax on payments to foreign persons.

(a) [Reserved] For further guidance, see § 1.1441–1T(a).

(b) *General rules of withholding*—(1) [Reserved] For further guidance, see § 1.1441–1T(b)(1).

(2) *Determination of payee and payee's status*—(i) [Reserved] For further guidance, see § 1.1441–1T(b)(2)(i).

(ii) *Payments to a U.S. agent of a foreign person.* A withholding agent making a payment to a U.S. person (other than to a U.S. branch that is treated as a U.S. person pursuant to paragraph (b)(2)(iv) of this section) and who has actual knowledge that the U.S. person receives the payment as an agent of a foreign person must treat the payment as made to the foreign person. However, the withholding agent may treat the payment as made to the U.S. person if the U.S. person is a financial institution and the withholding agent has no reason to believe that the financial institution will not comply with its obligation to withhold. See paragraph (c)(5) of this section for the definition of a financial institution.

(iii) *Payments to wholly-owned entities*—(A) [Reserved] For further guidance, see § 1.1441–1T(b)(2)(iii)(A).

(B) *Foreign entity.* A payment to a wholly-owned foreign entity that is disregarded under § 301.7701–2(c)(2) of this chapter as an entity separate from its owner shall be treated as a payment to the single owner of the entity, subject to the provisions of paragraph (b)(2)(iv) of this section if the foreign entity has a U.S. branch in the United States. For purposes of this paragraph (b)(2)(iii)(B), a foreign entity means a person that would be treated as a foreign person if it had an election in effect under § 301.7701–3(c)(1)(i) of this chapter to be treated as a corporation. See §§ 1.894–1T(d) and 1.1441–6(b)(2) for special rules where the foreign entity or its owner is claiming a reduced rate of withholding under an income tax treaty. Thus, for example, if the foreign entity's single owner is a U.S. person, the payment shall be treated as a payment to a U.S. person. Therefore, based on the saving clause in U.S. income tax treaties, such an entity may not claim benefits under an income tax treaty even if the entity is organized in a country with which the United States has an income tax treaty in effect and treats the entity as a non-fiscally transparent entity. See § 1.894–1T(d)(6), *Example 10.* Unless it has actual knowledge or reason to know that the foreign entity to whom the payment is made is disregarded under § 301.7701–2(c)(2) of this chapter, a withholding agent may treat a foreign entity as an entity separate from its owner unless it can reliably associate the payment with a withholding certificate from the entity's owner.

(iv) *Payments to a U.S. branch of certain foreign banks or foreign insurance companies*—(A) [Reserved] For further guidance, see § 1.1441–1T(b)(2)(iv)(A).

(B) *Consequences to the withholding agent.* Any person that is otherwise a withholding agent regarding a payment to a U.S. branch described in paragraph (b)(2)(iv)(A) of this section shall treat the payment in one of the following ways—

(*1*) As a payment to a U.S. person, in which case the withholding agent is not responsible for withholding on such payment to the extent it can reliably associate the payment with a withholding certificate described in paragraph (e)(3)(v) of this section that has been furnished by the U.S. branch under its agreement with the withholding agent to be treated as a U.S. person;

(*2*) through (*4*) [Reserved] For further guidance, see § 1.1441–1T(b)(2)(iv)(B)(*2*) through (b)(2)(iv)(B)(*4*).

(C) [Reserved] For further guidance, see § 1.1441–1T(b)(2)(iv)(C).

(D) *Definition of payment to a U.S. branch.* A payment is treated as a payment to a U.S. branch of a foreign bank or foreign insurance company if the payment is credited to an account maintained in the United States in the name of a U.S. branch of the foreign person, or the payment is made to an address in the United States where the U.S. branch is located and the name of the U.S. branch appears on documents (in written or electronic form) associated with the payment (e.g., the check mailed or a letter addressed to the branch).

(E) [Reserved] For further guidance, see § 1.1441–1T(b)(2)(iv)(E).

(v) *Payments to a foreign intermediary*—(A) *Payments treated as made to persons for whom the intermediary collects the payment.* Except as otherwise provided in paragraph (b)(2)(v)(B) of this section, the payee of a payment to a person that the withholding agent may treat as a foreign intermediary in accordance with the provisions of paragraph (b)(3)(ii)(C) or (b)(3)(v)(A) of this section is the person or persons for whom the intermediary collects the payment. Thus, for example, the payee of a payment that the withholding agent can reliably associate with a withholding certificate from a qualified intermediary (defined in paragraph (e)(5)(ii) of this section) that does not assume primary withholding responsibility or a payment to a nonqualified intermediary are the persons for whom the qualified intermediary or nonqualified intermediary acts and not to the intermediary itself. See paragraph (b)(3)(v) of this section for presumptions that apply if the payment cannot be reliably associated with valid documentation. For similar rules for payments to flow-through entities, see § 1.1441–5(c)(1) and (e)(3).

(B) *Payments treated as made to foreign intermediary.* The payee of a payment to a person that the withholding agent may treat as a qualified intermediary is the qualified intermediary to the extent that the qualified intermediary assumes primary withholding responsibility under paragraph (e)(5)(iv) of this section for the payment. For example if a qualified intermediary assumes primary withholding responsibility under chapter 3 of the Internal Revenue Code but does not assume primary reporting or withholding responsibility under chapter 61 or section 3406 of the Internal Revenue Code and therefore provides Forms W–9 for U.S. non-exempt recipients, the qualified intermediary is the payee except to the extent the payment is reliably associated with a Form W–9 from a U.S. non-exempt recipient.

(vi) [Reserved] For further guidance, see § 1.1441–1T(b)(2)(vi).

(vii) *Rules for reliably associating a payment with a withholding certificate or other appropriate documentation*—(A) *Generally.* The presumption rules of paragraph (b)(3) of this section and §§ 1.1441–5(d) and (e)(6) and 1.6049–5(d) apply to any payment, or portion of a payment, that a withholding agent cannot reliably associate with valid documentation. Generally, a withholding agent can reliably associate a payment with valid documentation if, prior to the payment, it holds valid documentation (either directly or through an agent), it can reliably determine how much of the payment relates to the valid documentation, and it has no actual knowledge or reason to know that any of the information, certifications, or statements in, or associated with, the documentation are incorrect. Special rules apply for payments made to intermediaries, flow-through entities, and certain U.S.

branches. See paragraph (b)(2)(vii)(B) through (F) of this section. The documentation referred to in this paragraph (b)(2)(vii) is documentation described in paragraphs (c)(16) and (17) of this section upon which a withholding agent may rely to treat the payment as a payment made to a payee or beneficial owner, and to ascertain the characteristics of the payee or beneficial owner that are relevant to withholding or reporting under chapter 3 of the Internal Revenue Code and the regulations thereunder. A withholding agent that is not required to obtain documentation with respect to a payment is considered to lack documentation for purposes of this paragraph (b)(2)(vii). For example, a withholding agent paying U.S. source interest to a person that is an exempt recipient, as defined in §1.6049–4(c)(1)(ii), is not required to obtain documentation from that person in order to determine whether an amount paid to that person is reportable under an applicable information reporting provision under chapter 61 of the Internal Revenue Code. The withholding agent must, however, treat the payment as made to an undocumented person for purposes of chapter 3 of the Internal Revenue Code. Therefore, the presumption rules of paragraph (b)(3)(iii) of this section apply to determine whether the person is presumed to be a U.S. person (in which case, no withholding is required under this section), or whether the person is presumed to be a foreign person (in which case 30-percent withholding is required under this section). See paragraph (b)(3)(v) of this section for special reliance rules in the case of a payment to a foreign intermediary and §1.1441–5(d) and (e)(6) for special reliance rules in the case of a payment to a flow-through entity.

(B) through (F) [Reserved]. For further guidance, see §1.1441–1T(b)(2)(vii)(B) through (F).

(3) *Presumptions regarding payee's status in the absence of documentation*—(i) [Reserved] For further guidance, see §1.1441–1T(b)(3)(i).

(ii) *Presumptions of classification as individual, corporation, partnership, etc.* (A) through (C) [Reserved] For further guidance, see §1.1441–1T(b)(3)(ii)(A) trough (b)(3)(ii)(C).

(iii) [Reserved] For further guidance, see §1.1441–1T(b)(3)(iii).

(A) [Reserved] For further guidance, see §1.1441–1T(b)(3)(iii)(A).

(*1*) [Reserved] For further guidance, see §1.1441–1T(b)(3)(iii)(A)(*1*).

(B) *Scholarships and grants.* A payment representing taxable scholarship or fellowship grant income that does not represent compensation for services (but is not excluded from tax under section 117) and that a withholding agent cannot reliably associate with documentation is presumed to be made to a foreign person if the withholding agent has a record that the payee has a U.S. visa that is not an immigrant visa. See section 871(c) and §1.1441–4(c) for applicable tax rate and withholding rules.

(C) *Pensions, annuities, etc.* A payment from a trust described in section 401(a), an annuity plan described in section 403(a), a payment with respect to any annuity, custodial account, or retirement income account described in section 403(b), or a payment from an individual retirement account or individual retirement annuity described in section 408 that a withholding agent cannot reliably associate with documentation is presumed to be made to a U.S. person only if the withholding agent has a record of a Social Security number for the payee and relies on a mailing address described in the following sentence. A mailing address is an address used for purposes of information reporting or otherwise communicating with the payee that is an address in the United States or in a foreign country with which the United States has an income tax treaty in effect and the treaty provides that the payee, if an individual resident in that country, would be entitled to an exemption from U.S. tax on amounts described in this paragraph (b)(3)(iii)(C). Any payment described in this paragraph (b)(3)(iii)(C) that is not presumed to be made to a U.S. person is presumed to be made to a foreign person. A withholding agent making a payment to a person presumed to be a foreign person may not reduce the 30-percent amount of withholding required on such payment unless it receives a withholding certificate described in

paragraph (e)(2)(i) of this section furnished by the beneficial owner. For reduction in the 30-percent rate, see §§ 1.1441–4(e) or 1.1441–6(b).

(D) [Reserved] For further guidance, see § 1.1441–1T(b)(3)(iii)(D).

(E) *Certain payments for services.* A payment for services is presumed to be made to a foreign person if—

(*1*) The payee is an individual;

(*2*) The withholding agent does not know, or have reason to know, that the payee is a U.S. citizen or resident;

(*3*) The withholding agent does not know, or have reason to know, that the income is (or may be) effectively connected with the conduct of a trade or business within the United States; and

(*4*) All of the services for which the payment is made were performed by the payee outside of the United States.

(iv) [Reserved] For further guidance, see § 1.1441–1T(b)(3)(iv).

(A) [Reserved] For further guidance, see § 1.1441–1T(b)(3)(iv)(A).

(B) If, at the end of the grace period, the documentation is not furnished in the manner required under this section, or if documentation is furnished that does not support the claimed rate reduction, and the account holder is presumed to be a foreign person then adjustments must be made to correct any underwithholding on amounts credited to the account during the grace period, based on the adjustment procedures described in § 1.1461–2.

(v) *Special rules applicable to payments to foreign intermediaries*—(A) *Reliance on claim of status as foreign intermediary.* The presumption rules of paragraph (b)(3)(v)(B) of this section apply to a payment made to an intermediary (whether the intermediary is a qualified or nonqualified intermediary) that has provided a valid withholding certificate under paragraph (e)(3)(ii) or (iii) of this section (or has provided documentary evidence described in paragraph (b)(3)(ii)(C) of this section that indicates it is a bank, broker, custodian, intermediary, or other agent) to the extent the withholding agent cannot treat the payment as being reliably associated with valid documentation under the rules of paragraph (b)(2)(vii) of this section. For this purpose, a U.S. person's foreign branch that is a qualified intermediary defined in paragraph (e)(5)(ii) of this section shall be treated as a foreign intermediary. A payee that the withholding agent may not reliably treat as a foreign intermediary under this paragraph (b)(3)(v)(A) is presumed to be a payee other than an intermediary whose classification as an individual, corporation, partnership, etc., must be determined in accordance with paragraph (b)(3)(ii) of this section to the extent relevant. In addition, such payee is presumed to be a U.S. or a foreign payee based upon the presumptions described in paragraph (b)(3)(iii) of this section. The provisions of paragraph (b)(3)(v)(B) of this section are not relevant to a withholding agent that can reliably associate a payment with a withholding certificate from a person representing to be a qualified intermediary to the extent the qualified intermediary has assumed primary withholding responsibility in accordance with paragraph (e)(5)(iv) of this section.

(B) [Reserved] For further guidance, see § 1.1441–1T(b)(3)(v)(B).

(vi) [Reserved] For further guidance, see § 1.1441–1T(b)(3)(vi).

(vii) [Reserved] For further guidance, see § 1.1441–1T(b)(3)(vii).

(viii) *Rebuttal of presumptions.* A payee or beneficial owner may rebut the presumptions described in this paragraph (b)(3) by providing reliable documentation to the withholding agent or, if applicable, to the IRS.

(ix) *Effect of reliance on presumptions and of actual knowledge or reason to know otherwise*—(A) [Reserved] For further guidance, see § 1.1441–1T(b)(3)(ix)(A).

(B) *Actual knowledge or reason to know that amount of withholding is greater than is required under the presumptions or that reporting of the payment is required.* Notwithstanding the provisions of paragraph (b)(3)(ix)(A) of this section, a withholding agent may not rely on the presumptions described in this paragraph (b)(3) to the extent it has actual knowledge or reason to know that the status or characteristics of the payee or of the beneficial owner are other than what is presumed under this paragraph (b)(3) and, if based on such knowledge or reason to know, it should withhold (under this section or another withholding provision of the Code) an

amount greater than would be the case if it relied on the presumptions described in this paragraph (b)(3) or it should report (under this section or under another provision of the Code) an amount that would not otherwise be reportable if it relied on the presumptions described in this paragraph (b)(3). In such a case, the withholding agent must rely on its actual knowledge or reason to know rather than on the presumptions set forth in this paragraph (b)(3). Failure to do so and, as a result, failure to withhold the higher amount or to report the payment, shall result in liability for tax, interest, and penalties to the extent provided under sections 1461 and 1463 and the regulations under those sections.

(x) [Reserved] For further guidance, see §1.1441–1T(b)(3)(x).

(4) [Reserved] For further guidance, see §1.1441–1T(b)(4).

(i) [Reserved] For further guidance, see §1.1441–1T(b)(4)(i).

(ii) Bank deposit interest and similar types of deposit interest (including original issue discount) described in section 871(i)(2)(A) or 881(d) that are from sources within the United States are exempt from withholding under section 1441(a). See section 1441(c)(10). Documentation establishing foreign status is not required for purposes of this withholding exemption but may have to be furnished for purposes of the information reporting provisions of section 6049 and backup withholding under section 3406. See §1.6049–5(d)(3)(iii) for exceptions to the foreign payee and exempt recipient rules regarding this type of income. See also §1.6049–5(b)(11) for applicable documentation exemptions for certain bank deposit interest paid on obligations in bearer form.

(iii) Bank deposit interest (including original issue discount) described in section 861(a)(1)(B) is exempt from withholding under sections 1441(a) as income that is not from U.S. sources. Documentation establishing foreign status is not required for purposes of this withholding exemption but may have to be furnished for purposes of the information reporting provisions of section 6049 and backup withholding under section 3406. Reporting requirements for payments of such interest are governed by section 6049 and the regulations under that section. See §1.6049–5(b)(12) and alternative documentation rules under §1.6049–5(c)(1).

(iv) Interest or original issue discount from sources within the United States on certain short-term obligations described in section 871(g)(1)(B) or 881(a)(3) is exempt from withholding under sections 1441(a). Documentation establishing foreign status is not required for purposes of this withholding exemption but may have to be furnished for purposes of the information reporting provisions of section 6049 and backup withholding under section 3406. See §1.6049–5(b)(12) for applicable documentation for establishing foreign status and §1.6049–5(d)(3)(iii) for exceptions to the foreign payee and exempt recipient rules regarding this type of income. See also §1.6049–5(b)(10) for applicable documentation exemptions for certain obligations in bearer form.

(v) Income from sources without the United States is exempt from withholding under sections 1441(a). Documentation establishing foreign status is not required for purposes of this withholding exemption but may have to be furnished for purposes of the information reporting provisions of section 6049 or other applicable provisions of chapter 61 of the Code and backup withholding under section 3406. See, for example, §1.6049–5(b) (6) and (12) and alternative documentation rules under §1.6049–5(c). See also paragraph (b)(5) of this section for cross references to other applicable provisions of the regulations under chapter 61 of the Code.

(vi) Distributions from certain domestic corporations described in section 871(i)(2)(B) or 881(d) are exempt from withholding under section 1441(a). See section 1441(c)(10). Documentation establishing foreign status is not required for purposes of this withholding exemption but may have to be furnished for purposes of the information reporting provisions of section 6042 and backup withholding under section 3406. See §1.6042–3(b)(1) (iii) through (vi).

(vii) Dividends paid by certain foreign corporations that are treated as income from sources within the United States by reason of section 861(a)(2)(B) are exempt from withholding under section 884(e)(3) to the extent that the

distributions are paid out of earnings and profits in any taxable year that the corporation was subject to branch profits tax for that year. Documentation establishing foreign status is not required for purposes of this withholding exemption but may have to be furnished for purposes of the information reporting provisions of section 6042 and backup withholding under section 3406. See §1.6042–3(b)(1) (iii) through (vii).

(viii) Certain income that is effectively connected with the conduct of a U.S. trade or business is exempt from withholding under section 1441(a). See section 1441(c)(1). Documentation establishing foreign status and status of the income as effectively connected must be furnished for purposes of this withholding exemption to the extent required under the provisions of §1.1441–4(a). Documentation furnished for this purpose also serves as documentation establishing foreign status for purposes of applicable information reporting provisions under chapter 61 of the Code and for backup withholding under section 3406. See, for example, §1.6041–4(a)(1).

(ix) Certain income with respect to compensation for personal services of an individual that are performed in the United States is exempt from withholding under section 1441(a). See section 1441(c)(4) and §1.1441–4(b). However, such income may be subject to withholding as wages under section 3402. Documentation establishing foreign status must be furnished for purposes of any withholding exemption or reduction to the extent required under §1.1441–4(b) or 31.3401(a)(6)–1 (e) and (f) of this chapter. Documentation furnished for this purpose also serves as documentation establishing foreign status for purposes of information reporting under section 6041. See §1.6041–4(a)(1).

(x) Amounts described in section 871(f) that are received as annuities from certain qualified plans are exempt from withholding under section 1441(a). See section 1441(c)(7). Documentation establishing foreign status must be furnished for purposes of the withholding exemption as required under §1.1441–4(d). Documentation furnished for this purpose also serves as documentation establishing foreign status for purposes of information reporting under section 6041. See §1.6041–4(a)(1).

(xi) Payments to a foreign government (including a foreign central bank of issue) that are excludable from gross income under section 892(a) are exempt from withholding under section 1442. See §1.1441–8(b). Documentation establishing status as a foreign government is required for purposes of this withholding exemption. Payments to a foreign government are exempt from information reporting under chapter 61 of the Code (see §1.6049–4(c)(1)(ii)(F)).

(xii) Payments of certain interest income to a foreign central bank of issue or the Bank for International Settlements that are exempt from tax under section 895 are exempt from withholding under section 1442. Documentation establishing eligibility for such exemption is required to the extent provided in §1.1441–8(c)(1). Payments to a foreign central bank of issue or to the Bank for International Settlements are exempt from information reporting under chapter 61 of the Code (see §1.6049–4(c)(1)(ii) (H) and (M)).

(xiii) Amounts derived by a foreign central bank of issue from bankers' acceptances described in section 871(i)(2)(C) or 881(d) are exempt from tax and, therefore, from withholding. See section 1441(c)(10). Documentation establishing foreign status is not required for purposes of this withholding exemption if the name of the payee and other facts surrounding the payment reasonably indicate that the beneficial owner of the payment is a foreign central bank of issue as defined in §1.861–2(b)(4). See §1.1441–8(c)(2) for withholding procedures. See also §§1.6049–4(c)(1)(ii)(H) and 1.6041–3(q)(8) for a similar exemption from information reporting.

(xiv) Payments to an international organization from investments in the United States of stocks, bonds, or other domestic securities or from interest on deposits in banks in the United States of funds belonging to such international organization are exempt from tax under section 892(b) and, thus, from withholding. Documentation establishing status as an international organization is not required if the name of the payee and other facts

surrounding the payment reasonably indicate that the beneficial owner of the payment is an international organization within the meaning of section 7701(a)(18). See §1.1441–8(d). Payments to an international organization are exempt from information reporting under chapter 61 of the Code (see §1.6049–4(c)(1)(ii)(G)).

(xv) Amounts may be exempt from, or subject to a reduced rate of, withholding under an income tax treaty. Documentation establishing eligibility for benefits under an income tax treaty is required for this purpose as provided under §§1.1441–6. Documentation furnished for this purpose also serves as documentation establishing foreign status for purposes of applicable information reporting provisions under chapter 61 of the Code and for backup withholding under section 3406. See, for example, §1.6041–4(a)(1).

(xvi) Amounts of scholarships and grants paid to certain exchange or training program participants that do not represent compensation for services but are not excluded from tax under section 117 are subject to a reduced rate of withholding of 14-percent under section 1441(b). Documentation establishing foreign status is required for purposes of this reduction in rate as provided under §1.1441–4(c). This income is not subject to information reporting under chapter 61 of the Code nor to backup withholding under section 3406. The compensatory portion of a scholarship or grant is reportable as wage income. See §1.6041–3(o).

(xvii) Amounts paid to a foreign organization described in section 501(c) are exempt from withholding under section 1441 to the extent that the amounts are not income includible under section 512 in computing the organization's unrelated business taxable income and are not subject to the tax imposed by section 4948(a). Documentation establishing status as a tax-exempt organization is required for purposes of this exemption to the extent provided in §1.1441–9. Amounts includible under section 512 in computing the organization's unrelated business taxable income are subject to withholding to the extent provided in section 1443(a) and §1.1443–1(a). Gross investment income (as defined in section 4940(c)(2)) of a private foundation is subject to withholding at a 4-percent rate to the extent provided in section 1443(b) and §1.1443–1(b). Payments to a tax-exempt organization are exempt from information reporting under chapter 61 of the Code and the regulations thereunder (see §1.6049–4(c)(1)(ii)(B)(1)).

(xviii) Per diem amounts for subsistence paid by the U.S. government to a nonresident alien individual who is engaged in any program of training in the United States under the Mutual Security Act of 1954 are exempt from withholding under section 1441(a). See section 1441(c)(6). Documentation of foreign status is not required under §1.1441–4(e) for purposes of establishing eligibility for this exemption. See §1.6041–3(p).

(xix) Interest with respect to tax-free covenant bonds issued prior to 1934 is subject to special withholding procedures set forth in §1.1461–1 in effect prior to January 1, 2001 (see §1.1461–1 as contained in 26 CFR part 1, revised April 1, 1999).

(xx) Income from certain gambling winnings of a nonresident alien individual is exempt from tax under section 871(j) and from withholding under section 1441(a). See section 1441(c)(11). Documentation establishing foreign status is not required for purposes of this exemption but may have to be furnished for purposes of the information reporting provisions of section 6041 and backup withholding under section 3406. See §§1.6041–1 and 1.6041–4(a)(1).

(xxi) Any payments not otherwise mentioned in this paragraph (b)(4) shall be subject to withholding at the rate of 30-percent if it is an amount subject to withholding (as defined in §1.1441–2(a)) unless and to the extent the IRS may otherwise prescribe in published guidance (see §601.601(d)(2) of this chapter) or unless otherwise provided in regulations under chapter 3 of the Code.

(5) *Establishing foreign status under applicable provisions of chapter 61 of the Code.* This paragraph (b)(5) identifies relevant provisions of the regulations under chapter 61 of the Code that exempt payments from information reporting, and therefore, from backup withholding under section 3406, based

on the payee's status as a foreign person. Many of these exemptions require that the payee's foreign status be established in order for the exemption to apply. The regulations under applicable provisions of chapter 61 of the Code generally provide that the documentation described in this section may be relied upon for purposes of determining foreign status.

(i) Payments to a foreign person that are governed by section 6041 (dealing with certain trade or business income) are exempt from information reporting under § 1.6041–4(a).

(ii) Payments to a foreign person that are governed by section 6041A (dealing with remuneration for services and certain sales) are exempt from information reporting under § 1.6041A–1(d)(3).

(iii) Payments to a foreign person that are governed by section 6042 (dealing with dividends) are exempt from information reporting under § 1.6042–3(b)(1) (iii) through (vi).

(iv) Payments to a foreign person that are governed by section 6044 (dealing with patronage dividends) are exempt from information reporting under § 1.6044–3(c)(1).

(v) Payments to a foreign person that are governed by section 6045 (dealing with broker proceeds) are exempt from information reporting under § 1.6045–1(g).

(vi) Payments to a foreign person that are governed by section 6049 (dealing with interest) to a foreign person are exempt from information reporting under § 1.6049–5(b) (6) through (15).

(vii) Payments to a foreign person that are governed by section 6050N (dealing with royalties) are exempt from information reporting under § 1.6050N–1(c).

(viii) Payments to a foreign person that are governed by section 6050P (dealing with income from cancellation of debt) are exempt from information reporting under section 6050P or the regulations under that section except to the extent provided in Notice 96–61 (1996–2 C.B. 227); see also § 601.601(b)(2) of this chapter.

(ix) [Reserved] For further guidance, see § 1.1441–1T(b)(5)(ix).

(6) [Reserved] For further guidance, see § 1.1441–1T(b)(6).

(7) *Liability for failure to obtain documentation timely or to act in accordance with applicable presumptions*—(i) [Reserved] For further guidance, see § 1.1441–1T(b)(7)(i).

(A) through (C) [Reserved] For further guidance, see § 1.1441–1T(b)(7)(i)(A) through (b)(7)(i)(C).

(D) The withholding agent has complied with the provisions of § 1.1441–6(c) or (g).

(ii) [Reserved] For further guidance, see § 1.1441–1T(b)(7)(ii).

(iii) *Liability for interest and penalties.* For payments made after December 31, 2000, if a withholding agent fails to deduct and withhold any tax imposed under sections 1441 or 1442, and the tax against which such tax may be credited under section 1462 is paid, then the amount of tax required to be deducted and withheld shall not be collected from the withholding agent. However, the withholding agent is not relieved from liability for interest or any penalties or additions to the tax otherwise applicable in respect of the failure to deduct and withhold. See section 1463. Further, in the event that a tax liability is assessed against the beneficial owner under section 871, 881, or 882 and interest under section 6601(a) is assessed against, and collected from, the beneficial owner, the interest charge imposed on the withholding agent shall be abated to that extent so as to avoid the imposition of a double interest charge.

(iv) [Reserved] For further guidance, see § 1.1441–1T(b)(7)(iv).

(v) [Reserved] For further guidance, see § 1.1441–1T(b)(7)(v).

(8) *Adjustments, refunds, or credits of overwithheld amounts.* If the amount withheld under section 1441, 1442, or 1443 is greater than the tax due by the withholding agent or the taxpayer, adjustments may be made in accordance with the procedures described in § 1.1461–2(a). Alternatively, refunds or credits may be claimed in accordance with the procedures described in § 1.1464–1, relating to refunds or credits claimed by the beneficial owner, or § 1.6414–1, relating to refunds or credits claimed by the withholding agent. If an amount was withheld under section 3406 or is subsequently determined to have been paid to a foreign person, see

paragraph (b)(3)(vii) of this section and § 31.6413(a)–3(a)(1) of this chapter.

(9) *Payments to joint owners.* A payment to joint owners that requires documentation in order to reduce the rate of withholding under chapter 3 of the Code and the regulations thereunder does not qualify for such reduced rate unless the withholding agent can reliably associate the payment with documentation from each owner. Notwithstanding the preceding sentence, a payment to joint owners qualifies as a payment exempt from withholding under this section if any one of the owners provides a certificate of U.S. status on a Form W–9 in accordance with paragraph (d) (2) or (3) of this section or the withholding agent can associate the payment with an intermediary or flow-through withholding certificate upon which it can rely to treat the payment as made to a U.S. payee under paragraph (d)(4) of this section. See § 31.3406(h)–2(a)(3)(i)(B) of this chapter.

(c) [Reserved] For further guidance, see § 1.1441–1T(c).

(1) *Withholding.* The term *withholding* means the deduction and withholding of tax at the applicable rate from the payment.

(2) [Reserved] For further guidance, see § 1.1441–1T(c)(2).

(3) *Individual*—(i) *Alien individual.* The term *alien individual* means an individual who is not a citizen or a national of the United States. See § 1.1–1(c).

(ii) *Nonresident alien individual.* The term *nonresident alien individual* means a person described in section 7701(b)(1)(B), an alien individual who is a resident of a foreign country under the residence article of an income tax treaty and § 301.7701(b)–7(a)(1) of this chapter, or an alien individual who is a resident of Puerto Rico, Guam, the Commonwealth of Northern Mariana Islands, the U.S. Virgin Islands, or American Samoa as determined under § 301.7701(b)–1(d) of this chapter. An alien individual who has made an election under section 6013 (g) or (h) to be treated as a resident of the United States is nevertheless treated as a nonresident alien individual for purposes of withholding under chapter 3 of the Code and the regulations thereunder.

(4) *Certain foreign corporations.* For purposes of this section, a corporation created or organized in Guam, the Commonwealth of Northern Mariana Islands, the U.S. Virgin Islands, and American Samoa, is not treated as a foreign corporation if the requirements of sections 881(b)(1) (A), (B), and (C) are met for such corporation. Further, a payment made to a foreign government or an international organization shall be treated as a payment made to a foreign corporation for purposes of withholding under chapter 3 of the Code and the regulations thereunder.

(5) [Reserved] For further guidance, see § 1.1441–1T(c)(5).

(6) *Beneficial owner*—(i) *General rule.* This paragraph (c)(6) defines the term *beneficial owner* for payments of income other than a payment for which a reduced rate of withholding is claimed under an income tax treaty. The term *beneficial owner* means the person who is the owner of the income for tax purposes and who beneficially owns that income. A person shall be treated as the owner of the income to the extent that it is required under U.S. tax principles to include the amount paid in gross income under section 61 (determined without regard to an exclusion or exemption from gross income under the Internal Revenue Code). Beneficial ownership of income is determined under the provisions of section 7701(l) and the regulations under that section and any other applicable general U.S. tax principles, including principles governing the determination of whether a transaction is a conduit transaction. Thus, a person receiving income in a capacity as a nominee, agent, or custodian for another person is not the beneficial owner of the income. In the case of a scholarship, the student receiving the scholarship is the beneficial owner of that scholarship. In the case of a payment of an amount that is not income, the beneficial owner determination shall be made under this paragraph (c)(6) as if the amount were income.

(ii) *Special rules*—(A) *General rule.* The beneficial owners of income paid to an entity described in this paragraph (c)(6)(ii) are those persons described in paragraphs (c)(6)(ii)(B) through (D) of this section.

(B) *Foreign partnerships.* The beneficial owners of income paid to a foreign partnership (whether a nonwithholding or a withholding foreign partnership) are the partners in the partnership, unless they themselves are not the beneficial owners of the income under this paragraph (c)(6). For example, a partnership (first tier) that is a partner in another partnership (second tier) is not the beneficial owner of income paid to the second tier partnership since the first tier partnership is not the owner of the income under U.S. tax principles. Rather, the partners of the first tier partnership are the beneficial owners (to the extent they are not themselves persons that are not beneficial owners under this paragraph (c)(6)). See §1.1441–5(b) for applicable withholding procedures for payments to a domestic partnership. See also §1.1441–5(c)(3)(ii) for applicable withholding procedures for payments to a foreign partnership where one of the partners (at any level in the chain of tiers) is a domestic partnership.

(C) *Foreign simple trusts and foreign grantor trusts.* The beneficial owners of income paid to a foreign simple trust, as described in paragraph (c)(23) of this section, are the beneficiaries of the trust, unless they themselves are not the beneficial owners of the income under this paragraph (c)(6). The beneficial owners of income paid to a foreign grantor trust, as described in paragraph (c)(26) of this section, are the persons treated as the owners of the trust, unless they themselves are not the beneficial owners of the income under this paragraph (c)(6).

(D) *Other foreign trusts and foreign estates.* The beneficial owner of income paid to a foreign complex trust as defined in paragraph (c)(25) of this section or to a foreign estate is the foreign complex trust or estate itself.

(7) *Withholding agent.* For a definition of the term *withholding agent* and applicable rules, see §1.1441–7.

(8) *Person.* For purposes of the regulations under chapter 3 of the Code, the term *person* shall mean a person described in section 7701(a)(1) and the regulations under that section and a U.S. branch to the extent treated as a U.S. person under paragraph (b)(2)(iv) of this section. For purposes of the regulations under chapter 3 of the Code, the term *person* does not include a wholly-owned entity that is disregarded for federal tax purposes under §301.7701–2(c)(2) of this chapter as an entity separate from its owner. See paragraph (b)(2)(iii) of this section for procedures applicable to payments to such entities.

(9) *Source of income.* The source of income is determined under the provisions of part I (section 861 and following) , subchapter N, chapter 1 of the Code and the regulations under those provisions.

(10) [Reserved] For further guidance, see §1.1441–1T(c)(10).

(11) *Reduced rate.* For purposes of regulations under chapter 3 of the Code, and other withholding provisions of the Code, the term *reduced rate,* when used in regulations under chapter 3 of the Code, shall include an exemption from tax.

(12) [Reserved] For further guidance, see §1.1441–1T(c)(12).

(13) *Intermediary.* An *intermediary* means, with respect to a payment that it receives, a person that, for that payment, acts as a custodian, broker, nominee, or otherwise as an agent for another person, regardless of whether such other person is the beneficial owner of the amount paid, a flow-through entity, or another intermediary.

(14) *Nonqualified intermediary.* A *nonqualified intermediary* means any intermediary that is not a U.S. person and not a qualified intermediary, as defined in paragraph (e)(5)(ii) of this section, or a qualified intermediary that is not acting in its capacity as a qualified intermediary with respect to a payment. For example, to the extent an entity that is a qualified intermediary provides another withholding agent with a foreign beneficial owner withholding certificate as defined in paragraph (e)(2)(i) of this section, the entity is not acting in its capacity as a qualified intermediary. Notwithstanding the preceding sentence, a qualified intermediary is acting as a qualified intermediary to the extent it provides another withholding agent with Forms W–9, or other information regarding U.S. non-exempt recipients

pursuant to its qualified intermediary agreement with the IRS.

(15) *Qualified intermediary*. The term *qualified intermediary* is defined in paragraph (e)(5)(ii) of this section.

(c)(16) through (c)(17) [Reserved] For further guidance, see §1.1441–1T(c)(16) through (c)(17).

(18) *Documentation*. The term *documentation* refers to both withholding certificates, as defined in paragraph (c)(16) of this section, and documentary evidence or other appropriate documentation, as defined in paragraph (c)(17) of this section.

(19) *Payor*. The term *payor* is defined in §31.3406(a)–2 of this chapter and §1.6049–4(a)(2) and generally includes a withholding agent, as defined in §1.1441–7(a). The term also includes any person that makes a payment to an intermediary, flow-through entity, or U.S. branch that is not treated as a U.S. person to the extent the intermediary, flow-through, or U.S. branch provides a Form W–9 or other appropriate information relating to a payee so that the payment can be reported under chapter 61 of the Internal Revenue Code and, if required, subject to backup withholding under section 3406. This latter rule does not preclude the intermediary, flow-through entity, or U.S. branch from also being a payor.

(20) *Exempt recipient*. The term *exempt recipient* means a person that is exempt from reporting under chapter 61 of the Internal Revenue Code and backup withholding under section 3406 and that is described in §§1.6041–3(q), 1.6045–2(b)(2)(i), and 1.6049–4(c)(1)(ii), and §5f.6045–1(c)(3)(i)(B) of this chapter. Exempt recipients are not exempt from withholding under chapter 3 of the Internal Revenue Code unless they are U.S. persons or foreign persons entitled to an exemption from withholding under chapter 3.

(21) *Non-exempt recipient*. A *non-exempt recipient* is any person that is not an exempt recipient under paragraph (c)(20) of this section.

(22) *Reportable amounts*. *Reportable amounts* are defined in paragraph (e)(3)(vi) of this section.

(23) *Flow-through entity*. A *flow-through entity* means any entity that is described in this paragraph (c)(23) and that may provide documentation on behalf of others to a withholding agent. The entities described in this paragraph are a foreign partnership (other than a withholding foreign partnership), a foreign simple trust (other than a withholding foreign trust) that is described in paragraph (c)(24) of this section, a foreign grantor trust (other than a withholding foreign trust) that is described in paragraph (c)(25) of this section, or, for any payments for which a reduced rate of withholding under an income tax treaty is claimed, any entity to the extent the entity is considered to be fiscally transparent under section 894 with respect to the payment by an interest holder's jurisdiction.

(24) *Foreign simple trust*. A *foreign simple trust* is a foreign trust that is described in section 651(a).

(25) [Reserved] For further guidance, see §1.1441–1T(c)(25).

(26) *Foreign grantor trust*. A *foreign grantor trust* is a foreign trust but only to the extent all or a portion of the income of the trust is treated as owned by the grantor or another person under sections 671 through 679.

(27) *Partnership*. The term *partnership* means any entity treated as a partnership under §301.7701–2 or –3 of this chapter.

(c)(28) through (c)(56) [Reserved] For further guidance, see §1.1441–1T(c)(28) through (c)(56).

(d) *Beneficial owner's or payee's claim of U.S. status*—(1) *In general*. Under paragraph (b)(1) of this section, a withholding agent is not required to withhold under chapter 3 of the Code on payments to a U.S. payee, to a person presumed to be a U.S. payee in accordance with the provisions of paragraph (b)(3) of this section, or to a person that the withholding agent may treat as a U.S. beneficial owner of the payment. Absent actual knowledge or reason to know otherwise, a withholding agent may rely on the provisions of this paragraph (d) in order to determine whether to treat a payee or beneficial owner as a U.S. person.

(2) *Payments for which a Form W–9 is otherwise required*. A withholding agent may treat as a U.S. payee any person who is required to furnish a Form W–9 and who furnishes it in accordance with the procedures described in §§31.3406(d)–1 through 31.3406(d)–5 of

this chapter (including the requirement that the payee furnish its taxpayer identifying number (TIN)) if the withholding agent meets all the requirements described in § 31.3406(h)–3(e) of this chapter regarding reliance by a payor on a Form W–9. Providing a Form W–9 or valid substitute form shall serve as a statement that the person whose name is on the form is a U.S. person. Therefore, a foreign person, including a U.S. branch treated as a U.S. person under paragraph (b)(2)(iv) of this section, shall not provide a Form W–9. A U.S. branch of a foreign person may establish its status as a foreign person exempt from reporting under chapter 61 and backup withholding under section 3406 by providing a withholding certificate on Form W–8.

(3) *Payments for which a Form W–9 is not otherwise required.* In the case of a payee who is not required to furnish a Form W–9 under section 3406 (e.g., a person exempt from reporting under chapter 61 of the Internal Revenue Code), the withholding agent may treat the payee as a U.S. payee if the payee provides the withholding agent with a Form W–9 or a substitute form described in § 31.3406(h)–3(c)(2) of this chapter (relating to forms for exempt recipients) that contains the payee's name, address, and TIN. The form must be signed under penalties of perjury by the payee if so required by the form or by § 31.3406(h)–3 of this chapter. Providing a Form W–9 or valid substitute form shall serve as a statement that the person whose name is on the certificate is a U.S. person. A Form W–9 or valid substitute form shall not be provided by a foreign person, including any U.S. branch of a foreign person whether or not the branch is treated as a U.S. person under paragraph (b)(2)(iv) of this section. See paragraph (e)(3)(v) of this section for withholding certificates provided by U.S. branches described in paragraph (b)(2)(iv) of this section. The procedures described in § 31.3406(h)–2(a) of this chapter shall apply to payments to joint payees. A withholding agent that receives a Form W–9 to satisfy this paragraph (d)(3) must retain the form in accordance with the provisions of § 31.3406(h)–3(g) of this chapter, if applicable, or of paragraph (e)(4)(iii) of this section (relating to the retention of withholding certificates) if § 31.3406(h)–3(g) of this chapter does not apply. The rules of this paragraph (d)(3) are only intended to provide a method by which a withholding agent may determine that a payee is a U.S. person and do not otherwise impose a requirement that documentation be furnished by a person who is otherwise treated as an exempt recipient for purposes of the applicable information reporting provisions under chapter 61 of the Internal Revenue Code (e.g., § 1.6049–4(c)(1)(ii) for payments of interest).

(4) [Reserved] For further guidance, see § 1.1441–1T(d)(4).

(e) *Beneficial owner's claim of foreign status*—(1) *Withholding agent's reliance*—(i) *In general.* Absent actual knowledge or reason to know otherwise, a withholding agent may treat a payment as made to a foreign beneficial owner in accordance with the provisions of paragraph (e)(1)(ii) of this section. See paragraph (e)(4)(viii) of this section for applicable reliance rules. See paragraph (b)(4) of this section for a description of payments for which a claim of foreign status is relevant for purposes of claiming a reduced rate of withholding for purposes of section 1441, 1442, or 1443. See paragraph (b)(5) of this section for a list of payments for which a claim of foreign status is relevant for other purposes, such as claiming an exemption from information reporting under chapter 61 of the Code.

(ii) *Payments that a withholding agent may treat as made to a foreign person that is a beneficial owner*—(A) *General rule.* The withholding agent may treat a payment as made to a foreign person that is a beneficial owner if it complies with the requirements described in paragraph (e)(1)(ii)(B) of this section and, then, only to the extent—

(*1*) That the withholding agent can reliably associate the payment with a beneficial owner withholding certificate described in paragraph (e)(2) of this section furnished by the person whose name is on the certificate or attached to a valid foreign intermediary, flow-through, or U.S. branch withholding certificate;

(*2*) through (e)(1)(ii)(A)(*3*) [Reserved] For further guidance, see §1.1441–1T(e)(1)(ii)(A)(*2*) through (e)(1)(ii)(A)(*3*).

(*4*) That the withholding agent can reliably associate the payment with a withholding certificate described in §1.1441–5(c)(3)(iii) or (e)(5)(iii) from a flow-through entity claiming the income is effectively connected income;

(*5*) That the withholding agent identifies the payee as a U.S. branch described in paragraph (b)(2)(iv) of this section, the payment to which it treats as effectively connected income in accordance with §1.1441–4(a) (2)(ii) or (3);

(*6*) That the withholding agent identifies the payee as an international organization (or any wholly-owned agency or instrumentality thereof) as defined in section 7701(a)(18) that has been designated as such by executive order (pursuant to 22 U.S.C. 288 through 288(f)); or

(*7*) That the withholding agent pays interest from bankers' acceptances and identifies the payee as a foreign central bank of issue (as defined in §1.861–2(b)(4)).

(B) *Additional requirements.* In order for a payment described in paragraph (e)(1)(ii)(A) of this section to be treated as made to a foreign beneficial owner, the withholding agent must hold the documentation (if required) prior to the payment, comply with the electronic confirmation procedures described in paragraph (e)(4)(v) of this section (if required), and must not have been notified by the IRS that any of the information on the withholding certificate or other documentation is incorrect or unreliable. If the withholding agent has been so notified, it may rely on the withholding certificate or other documentation only to the extent provided under procedures prescribed by the IRS (see §601.601(d)(2) of this chapter). See paragraph (b)(2)(vii) of this section for rules regarding reliable association of a payment with a withholding certificate or other appropriate documentation.

(2) *Beneficial owner withholding certificate*—(i) *In general.* A beneficial owner withholding certificate is a statement by which the beneficial owner of the payment represents that it is a foreign person and, if applicable, claims a reduced rate of withholding under section 1441. A separate withholding certificate must be submitted to each withholding agent. If the beneficial owner receives more than one type of payment from a single withholding agent, the beneficial owner may have to submit more than one withholding certificate to the single withholding agent for the different types of payments as may be required by the applicable forms and instructions, or as the withholding agent may require (such as to facilitate the withholding agent's compliance with its obligations to determine withholding under this section or the reporting of the amounts under §1.1461–1 (b) and (c)). For example, if a beneficial owner claims that some but not all of the income it receives is effectively connected with the conduct of a trade or business in the United States, it may be required to submit two separate withholding certificates, one for income that is not effectively connected and one for income that is so connected. See §1.1441–6(b)(2) for special rules for determining who must furnish a beneficial owner withholding certificate when a benefit is claimed under an income tax treaty. See paragraph (e)(4)(ix) of this section for reliance rules in the case of certificates held by another person or at a different branch location of the same person.

(ii) [Reserved] For further guidance, see §1.1441–1T(e)(2)(ii).

(3) *Intermediary, flow-through, or U.S. branch withholding certificate*—(i) *In general.* An intermediary withholding certificate is a Form W–8 by which a payee represents that it is a foreign person and that it is an intermediary (whether a qualified or nonqualified intermediary) with respect to a payment and not the beneficial owner. See paragraphs (e)(3)(ii) and (iii) of this section. A flow-through withholding certificate is a Form W–8 used by a flow-through entity as defined in paragraph (c)(23) of this section. See §1.1441–5(c)(3)(iii) (a nonwithholding foreign partnership), §1.1441–5(e)(5)(iii) (a foreign simple trust or foreign grantor trust) or §1.1441–6(b)(2) (foreign entity presenting claims on behalf of its interest holders for a reduced rate of withholding under an income tax treaty). A U.S. branch certificate is a Form W–8 furnished under paragraph

(e)(3)(v) of this section by a U.S. branch described in paragraph (b)(2)(iv) of this section. See paragraph (e)(4)(viii) of this section for applicable reliance rules.

(ii) [Reserved] For further guidance, see § 1.1441–1T(e)(3)(ii).

(A) [Reserved] For further guidance, see § 1.1441–1T(e)(3)(ii)(A).

(B) A certification that, with respect to accounts it identifies on its withholding statement (as described in paragraph (e)(5)(v) of this section), the qualified intermediary is not acting for its own account but is acting as a qualified intermediary;

(C) through (E) [Reserved] For further guidance, see § 1.1441–1T(e)(3)(ii)(C) through (e)(3)(ii)(E).

(iii) [Reserved] For further guidance, see § 1.1441–1T(e)(3)(iii).

(A) [Reserved] For further guidance, see § 1.1441–1T(e)(3)(iii)(A).

(B) A certification that the nonqualified intermediary is not acting for its own account;

(C) through (E) [Reserved] For further guidance, see § 1.1441–1T(e)(3)(iii)(C) through (e)(3)(iii)(E).

(iv) *Withholding statement provided by nonqualified intermediary*—(A) [Reserved] For further guidance, see § 1.1441–1T(e)(3)(iv)(A) through (C).

(D) *Alternative procedures*—(*1*) [Reserved] For further guidance, see § 1.1441–1T(e)(3)(iv)(D)(*1*).

(*2*) [Reserved] For further guidance, see § 1.1441–1T(e)(3)(iv)(D)(*2*).

(*3*) [Reserved] For further guidance, see § 1.1441–1T(e)(3)(iv)(D)(*3*).

(*4*) [Reserved] For further guidance, see § 1.1441–1T(e)(3)(iv)(D)(*4*).

(*5*) [Reserved] For further guidance, see § 1.1441–1T(e)(3)(iv)(D)(*5*).

(*6*) [Reserved] For further guidance, see § 1.1441–1T(e)(3)(iv)(D)(*6*).

(*7*) *Liability for tax, interest, and penalties*. If a nonqualified intermediary fails to provide allocation information by February 14 following the year of payment for all or a portion of the payments made to any withholding rate pool, the withholding agent from whom the nonqualified intermediary received payments of reportable amounts shall not be liable for any tax, interest, or penalties, due solely to the errors or omissions of the nonqualified intermediary. See § 1.1441–7(b)(2) through (10) for the due diligence requirements of a withholding agent. Because failure by the nonqualified intermediary to provide allocation information results in a payment not being reliably associated with valid documentation, the beneficial owners for whom the nonqualified intermediary acts are not entitled to a reduced rate of withholding. Therefore, the nonqualified intermediary, as a withholding agent, shall be liable for any tax not withheld by the withholding agent in accordance with the presumption rules, interest on the under withheld tax if the nonqualified intermediary fails to pay the tax timely, and any applicable penalties, including the penalties under sections 6656 (failure to deposit), 6721 (failure to file information returns) and 6722 (failure to file payee statements). Failure to provide allocation information for more than 10 percent of the payments made to a particular withholding rate pool will be presumed to be an intentional failure within the meaning of sections 6721(e) and 6722(c). The nonqualified intermediary may rebut the presumption.

(*8*) *Applicability to flow-through entities and certain U.S. branches*. See paragraph (e)(3)(v) of this section and § 1.1441–5(c)(3)(iv) and (e)(5)(iv) for the applicability of this paragraph (e)(3)(iv) to U.S. branches described in paragraph (b)(2)(iv) of this section (other than U.S. branches treated as U.S. persons) and flow-through entities.

(E) [Reserved] For further guidance, see § 1.1441–1T(e)(3)(iv)(E).

(v) [Reserved] For further guidance, see § 1.1441–1T(e)(3)(v).

(vi) *Reportable amounts*. For purposes of chapter 3 of the Internal Revenue Code, a nonqualified intermediary, qualified intermediary, flow-through entity, and U.S. branch described in paragraph (b)(2)(iv) of this section (other than a U.S. branch that agrees to be treated as a U.S. person) must provide a withholding certificate and associated documentation and other information with respect to reportable amounts. For purposes of the regulations under chapter 3 of the Internal Revenue Code, the term reportable amount means an amount subject to withholding within the meaning of

§ 1.1441–2(a), bank deposit interest (including original issue discount) and similar types of deposit interest described in section 871(i)(2)(A) or 881(d) that are from sources within the United States, and any amount of interest or original issue discount from sources within the United States on the redemption of certain short-term obligations described in section 871(g)(1)(B) or 881(e). Reportable amounts shall not include amounts received on the sale or exchange (other than a redemption) of an obligation described in section 871(g)(1)(B) or 881(e) that is effected at an office outside the United States. See § 1.6045–1(g)(3) to determine whether a sale is effected at an office outside the United States. Reportable amounts also do not include payments with respect to deposits with banks and other financial institutions that remain on deposit for a period of two weeks or less, to amounts of original issue discount arising from a sale and repurchase transaction that is completed within a period of two weeks or less, or to amounts described in § 1.6049–5(b)(7), (10) or (11) (relating to certain obligations issued in bearer form). While short-term OID and bank deposit interest are not subject to withholding under chapter 3 of the Internal Revenue Code, such amounts may be subject to information reporting under section 6049 if paid to a U.S. person who is not an exempt recipient described in § 1.6049–4(c)(1)(ii) and to backup withholding under section 3406 in the absence of documentation. See § 1.6049–5(d)(3)(iii) for applicable procedures when such amounts are paid to a foreign intermediary.

(4) [Reserved] For further guidance, see § 1.1441–1T(e)(4).

(i) [Reserved] For further guidance, see § 1.1441–1T(e)(4)(i).

(ii) *Period of validity*—(A) [Reserved] For further guidance, see § 1.1441–1T(e)(4)(ii)(A).

(B) [Reserved]. For further guidance, see § 1.1441–1T(e)(4)(ii)(B).

(*1–6*) [Reserved] For further guidance, see § 1.1441–1T(e)(4)(ii)(B).

(*7*) A certificate furnished by a person representing to be an integral part of a foreign government (within the meaning of § 1.892–2T(a)(2)) in accordance with § 1.1441–8(b), or by a person representing to be a foreign central bank of issue (within the meaning of § 1.861–2(b)(4)) or the Bank for International Settlements in accordance with § 1.1441–8(c)(1).

(*8*) [Reserved] For further guidance, see § 1.1441–1T(e)(4)(ii)(B)(*8*).

(*9*) [Reserved] For further guidance, see § 1.1441–1T(e)(4)(ii)(B)(*9*).

(*10*) [Reserved] For further guidance, see § 1.1441–1T(e)(4)(ii)(B)(*10*).

(*11*) [Reserved] For further guidance, see § 1.1441–1T(e)(4)(ii)(B)(*11*).

(*12*) [Reserved] For further guidance, see § 1.1441–1T(e)(4)(ii)(B)(*12*).

(C) [Reserved] For further guidance, see § 1.1441–1T(e)(4)(ii)(C).

(D) [Reserved] For further guidance, see § 1.1441–1T(e)(4)(ii)(D).

(iii) [Reserved] For further guidance, see § 1.1441–1T(e)(4)(iii).

(iv) *Electronic transmission of information*—(A) [Reserved] For further guidance, see § 1.1441–1T(e)(4)(iv)(A).

(B) *Requirements*—(*1*) *In general*. The electronic system must ensure that the information received is the information sent, and must document all occasions of user access that result in the submission renewal, or modification of a Form W–8. In addition, the design and operation of the electronic system, including access procedures, must make it reasonably certain that the person accessing the system and furnishing Form W–8 is the person named in the Form.

(*2*) *Same information as paper Form W–8*. The electronic transmission must provide the withholding agent or payor with exactly the same information as the paper Form W–8.

(*3*) *Perjury statement and signature requirements*. The electronic transmission must contain an electronic signature by the person whose name is on the Form W–8 and the signature must be under penalties of perjury in the manner described in this paragraph (e)(4)(iv)(B)(*3*).

(*i*) *Perjury statement*. The perjury statement must contain the language that appears on the paper Form W–8. The electronic system must inform the person whose name is on the Form W–8 that the person must make the declaration contained in the perjury statement and that the declaration is made

by signing the Form W–8. The instructions and the language of the perjury statement must immediately follow the person's certifying statements and immediately precede the person's electronic signature.

(*ii*) *Electronic signature*. The act of the electronic signature must be effected by the person whose name is on the electronic Form W–8. The signature must also authenticate and verify the submission. For this purpose, the terms *authenticate* and *verify* have the same meanings as they do when applied to a written signature on a paper Form W–8. An electronic signature can be in any form that satisfies the foregoing requirements. The electronic signature must be the final entry in the person's Form W–8 submission.

(*4*) *Requests for electronic Form W–8 data*. Upon request by the Internal Revenue Service during an examination, the withholding agent must supply a hard copy of the electronic Form W–8 and a statement that, to the best of the withholding agent's knowledge, the electronic Form W–8 was filed by the person whose name is on the form. The hard copy of the electronic Form W–8 must provide exactly the same information as, but need not be identical to, the paper Form W–8.

(C) [Reserved] For further guidance, see §1.1441–1T(e)(4)(iv)(C).

(v) through (vii) [Reserved] For further guidance, see §1.1441–1T(e)(4)(v) through (e)(4)(vii).

(A) [Reserved] For further guidance, see §1.1441–1T(e)(4)(vii)(A).

(B) A withholding certificate on which a beneficial owner is claiming exemption from withholding because income is effectively connected with a U.S. trade or business;

(C) A withholding certificate on which a beneficial owner is claiming exemption from withholding under section 871(f) for certain annuities received under qualified plans;

(D) A withholding certificate on which a beneficial owner is claiming an exemption based solely on a foreign organization's claim of tax exempt status under section 501(c) or private foundation status (however, a TIN is not required from a foreign private foundation that is subject to the 4-percent tax under section 4948(a) on income if that income would be exempt from withholding but for section 4948(a) (e.g., portfolio interest));

(E) A withholding certificate from a person representing to be a qualified intermediary described in paragraph (e)(5)(ii) of this section;

(F) [Reserved] For further guidance, see §1.1441–1T(e)(4)(vii)(F).

(G) A withholding certificate provided by a foreign organization that is described in section 501(c);

(H) [Reserved] For further guidance, see §1.1441–1T(e)(4)(vii)(H).

(I) [Reserved] For further guidance, see §1.1441–1T(e)(4)(vii)(I).

(viii) *Reliance rules*. A withholding agent may rely on the information and certifications stated on withholding certificates or other documentation without having to inquire into the truthfulness of this information or certification, unless it has actual knowledge or reason to know that the same is untrue. In the case of amounts described in §1.1441–6(c)(2), a withholding agent described in §1.1441–7(b)(2)(ii) has reason to know that the information or certifications on a certificate are untrue only to the extent provided in §1.1441–7(b)(2)(ii). See §1.1441–6(b)(1) for reliance on representations regarding eligibility for a reduced rate under an income tax treaty. Paragraphs (e)(4)(viii) (A) and (B) of this section provide examples of such reliance.

(A) *Classification*. A withholding agent may rely on the claim of entity classification indicated on the withholding certificate that it receives from or for the beneficial owner, unless it has actual knowledge or reason to know that the classification claimed is incorrect. A withholding agent may not rely on a person's claim of classification other than as a corporation if the name of the corporation indicates that the person is a per se corporation described in §301.7701–2(b)(8)(i) of this chapter unless the certificate contains a statement that the person is a grandfathered per se corporation described in §301.7701–2(b)(8) of this chapter and that its grandfathered status has not been terminated. In the absence of reliable representation or information regarding the classification of the payee or beneficial owner, see §1.1441–1(b)(3)(ii) for applicable presumptions.

(B) [Reserved] For further guidance, see § 1.1441–1T(e)(4)(viii)(B).

(C) [Reserved] For further guidance, see § 1.1441–1T(e)(4)(viii)(C).

(ix) [Reserved] For further guidance, see § 1.1441–1T(e)(4)(ix).

(5) [Reserved] For further guidance, see § 1.1441–1T(e)(5).

(f) *Effective date*—(1) *In general.* This section applies to payments made after December 31, 2000.

(2) *Transition rules*—(i) *Special rules for existing documentation.* For purposes of paragraphs (d)(3) and (e)(2)(i) of this section, the validity of a withholding certificate (namely, Form W–8, 8233, 1001, 4224, or 1078 , or a statement described in § 1.1441–5 in effect prior to January 1, 2001 (see § 1.1441–5 as contained in 26 CFR part 1, revised April 1, 1999)) that was valid on January 1, 1998 under the regulations in effect prior to January 1, 2001 (see 26 CFR parts 1 and 35a, revised April 1, 1999) and expired, or will expire, at any time during 1998, is extended until December 31, 1998. The validity of a withholding certificate that is valid on or after January 1, 1999, remains valid until its validity expires under the regulations in effect prior to January 1, 2001 (see 26 CFR parts 1 and 35a, revised April 1, 1999) but in no event will such withholding certificate remain valid after December 31, 2000. The rule in this paragraph (f)(2)(i), however, does not apply to extend the validity period of a withholding certificate that expires solely by reason of changes in the circumstances of the person whose name is on the certificate. Notwithstanding the first three sentences of this paragraph (f)(2)(i), a withholding agent may choose to not take advantage of the transition rule in this paragraph (f)(2)(i) with respect to one or more withholding certificates valid under the regulations in effect prior to January 1, 2001 (see 26 CFR parts 1 and 35a, revised April 1, 1999) and, therefore, to require withholding certificates conforming to the requirements described in this section (new withholding certificates). For purposes of this section, a new withholding certificate is deemed to satisfy the documentation requirement under the regulations in effect prior to January 1, 2001 (see 26 CFR parts 1 and 35a, revised April 1, 1999). Further, a new withholding certificate remains valid for the period specified in paragraph (e)(4)(ii) of this section, regardless of when the certificate is obtained.

(ii) *Lack of documentation for past years.* A taxpayer may elect to apply the provisions of paragraphs (b)(7)(i)(B), (ii), and (iii) of this section, dealing with liability for failure to obtain documentation timely, to all of its open tax years, including tax years that are currently under examination by the IRS. The election is made by simply taking action under those provisions in the same manner as the taxpayer would take action for payments made after December 31, 2000.

(3) [Reserved] For further guidance, see § 1.1441–1T(f)(3).

[T.D. 8734, 62 FR 53424, Oct. 14, 1997, as amended by T.D. 8804, 63 FR 72184, 72187, Dec. 31, 1998; T.D. 8856, 64 FR 73409, 73412, Dec. 30, 1999; T.D. 8881, 65 FR 32170, 32211, May 22, 2000; 66 FR 18188, Apr. 6, 2001; T.D. 9023, 67 FR 70312, Nov. 22, 2002; T.D. 9253, 71 FR 13005, Mar. 14, 2006; T.D. 9323, 72 FR 18388, Apr. 12, 2007; T.D. 9658, 79 FR 12747, Mar. 6, 2014; 79 FR 37182, July 1, 2014]

§ 1.1441–1T Requirement for the deduction and withholding of tax on payments to foreign persons (temporary).

(a) *Purpose and scope.* This section, §§ 1.1441–2 through 1.1441–9, and 1.1443–1 provide rules for withholding under sections 1441, 1442, and 1443 when a payment is made to a foreign person. This section provides definitions of terms used in chapter 3 of the Internal Revenue Code (Code) and regulations thereunder. It prescribes procedures to determine whether an amount must be withheld under chapter 3 of the Code and documentation that a withholding agent may rely upon to determine the status of a payee or a beneficial owner as a U.S. person or as a foreign person and other relevant characteristics of the payee that may affect a withholding agent's obligation to withhold under chapter 3 of the Code and the regulations thereunder. Special procedures regarding payments to foreign persons that act as intermediaries are also provided. Section 1.1441–2 defines the income subject to withholding under section 1441, 1442, and 1443 and the regulations under these sections.

Section 1.1441–3 provides rules regarding the amount subject to withholding and rules for coordinating withholding under this section with withholding under section 1445 and under chapter 4 of the Code. Section 1.1441–4 provides exemptions from withholding for, among other things, certain income effectively connected with the conduct of a trade or business in the United States, including certain compensation for the personal services of an individual. Section 1.1441–5 provides rules for withholding on payments made to flow-through entities and other similar arrangements. Section 1.1441–6 provides rules for claiming a reduced rate of withholding under an income tax treaty. Section 1.1441–7 defines the term withholding agent and provides due diligence rules governing a withholding agent's obligation to withhold. Section 1.1441–8 provides rules for relying on claims of exemption from withholding for payments to a foreign government, an international organization, a foreign central bank of issue, or the Bank for International Settlements. Sections 1.1441–9 and 1.1443–1 provide rules for relying on claims of exemption from withholding for payments to foreign tax exempt organizations and foreign private foundations.

(b) *General rules of withholding*—(1) *Requirement to withhold on payments to foreign persons.* A withholding agent must withhold 30-percent of any payment of an amount subject to withholding made to a payee that is a foreign person unless it can reliably associate the payment with documentation upon which it can rely to treat the payment as made to a payee that is a U.S. person or as made to a beneficial owner that is a foreign person entitled to a reduced rate of withholding. However, a withholding agent making a payment to a foreign person need not withhold where the foreign person assumes responsibility for withholding on the payment under chapter 3 of the Code and the regulations thereunder as a qualified intermediary (see paragraph (e)(5) of this section), as a U.S. branch of a foreign person (see paragraph (b)(2)(iv) of this section), as a withholding foreign partnership (see §1.1441–5(c)(2)(i)), or as a withholding foreign trust (see §1.1441–5(e)(5)(v)). Withholding is also not required under this section when withholding under chapter 4 was applied to the payment. See §1.1441–3(a)(2). This section (dealing with general rules of withholding and claims of foreign or U.S. status by a payee or a beneficial owner), and §§1.1441–4, 1.1441–5, 1.1441–6, 1.1441–8, 1.1441–9, and 1.1443–1 provide rules for determining whether documentation is required as a condition for reducing the rate of withholding on a payment to a foreign beneficial owner or to a U.S. payee and if so, the nature of the documentation upon which a withholding agent may rely in order to reduce such rate. Paragraph (b)(2) of this section prescribes the rules for determining who the payee is, the extent to which a payment is treated as made to a foreign payee, and reliable association of a payment with documentation. Paragraph (b)(3) of this section describes the applicable presumptions for determining the payee's status as U.S. or foreign and the payee's other characteristics (*i.e.*, as an owner or intermediary, as an individual, partnership, corporation, etc.). Paragraph (b)(4) of this section lists the types of payments for which the 30-percent withholding rate may be reduced. Because the treatment of a payee as a U.S. or a foreign person also has consequences for purposes of making an information return under the provisions of chapter 61 of the Code and for withholding under other provisions of the Code, such as sections 3402, 3405 or 3406, paragraph (b)(5) of this section lists applicable provisions outside chapter 3 of the Code that require certain payees to establish their foreign status (for example, in order to be exempt from information reporting). Paragraph (b)(6) of this section describes the withholding obligations of a foreign person making a payment that it has received in its capacity as an intermediary. Paragraph (b)(7) of this section describes the liability of a withholding agent that fails to withhold at the required 30-percent rate in the absence of documentation. Paragraph (b)(8) of this section deals with adjustments and refunds in the case of overwithholding. Paragraph (b)(9) of this section deals with determining the status of the payee when the payment is jointly

owned. See paragraph (c)(6) of this section for a definition of beneficial owner. See § 1.1441–7(a) for a definition of withholding agent. See § 1.1441–2(a) for the determination of an amount subject to withholding. See § 1.1441–2(e) for the definition of a payment and when it is considered made. Except as otherwise provided, the provisions of this section apply only for purposes of determining a withholding agent's obligation to withhold under chapter 3 of the Code and the regulations thereunder.

(2) *Determination of payee and payee's status*—(i) *In general*. Except as otherwise provided in this paragraph (b)(2) and § 1.1441–5(c)(1) and (e)(3), a payee is the person to whom a payment is made, regardless of whether such person is the beneficial owner of the amount (as defined in paragraph (c)(6) of this section). A foreign payee is a payee who is a foreign person. A U.S. payee is a payee who is a U.S. person. Generally, the determination by a withholding agent of the U.S. or foreign status of a payee and of its other relevant characteristics (e.g., as a beneficial owner or intermediary, or as an individual, corporation, or flow-through entity) is made on the basis of a withholding certificate that is a Form W–8 or a Form 8233 (indicating foreign status of the payee or beneficial owner) or a Form W–9 (indicating U.S. status of the payee). The provisions of this paragraph (b)(2), paragraph (b)(3) of this section, and § 1.1441–5 (c), (d), and (e) dealing with determinations of payee and applicable presumptions in the absence of documentation, apply only to payments of amounts subject to withholding under chapter 3 of the Code (within the meaning of § 1.1441–2(a)). However, for a payment that is both an amount subject to withholding under chapter 3 and a withholdable payment under chapter 4, first apply the rules of § 1.1471–3 for determining the payee of a withholdable payment under chapter 4 and applicable presumptions in the absence of documentation applicable to such payments. See also § 1.6049–5(d) for payments of amounts that are not subject to withholding under chapter 3 of the Code (or the regulations thereunder) but that may be reportable under provisions of chapter 61 of the Code (and the regulations thereunder). See paragraph (d) of this section for documentation upon which the withholding agent may rely in order to treat the payee or beneficial owner as a U.S. person. See paragraph (e) of this section for documentation upon which the withholding agent may rely in order to treat the payee or beneficial owner as a foreign person. For applicable presumptions of status in the absence of documentation, see paragraph (b)(3) of this section and § 1.1441–5(d). For definitions of a foreign person and U.S. person, see paragraph (c)(2) of this section.

(ii) [Reserved] For further guidance, see § 1.1441–1(b)(2)(ii).

(iii) *Payments to wholly-owned entities*—(A) *Foreign-owned domestic entity*. A payment to a wholly-owned domestic entity that is disregarded for federal tax purposes under § 301.7701–2(c)(2) of this chapter as an entity separate from its owner and whose single owner is a foreign person shall be treated as a payment to the owner of the entity, subject to the provisions of paragraph (b)(2)(iv) of this section. For purposes of this paragraph (b)(2)(iii)(A), a domestic entity means a person that would be treated as a U.S. person if it had an election in effect under § 301.7701–3(c)(1)(i) of this chapter to be treated as a corporation. For example, a limited liability company, A, organized under the laws of the State of Delaware, opens an account at a U.S. bank. Upon opening of the account, the bank requests A to furnish a Form W–9 as required under section 6049(a) and the regulations under that section. A does not have an election in effect under § 301.7701–3(c)(1)(i) of this chapter and, therefore, is not treated as an organization taxable as a corporation, including for purposes of the exempt recipient provisions in § 1.6049–4(c)(1). If A has a single owner and the owner is a foreign person (as defined in paragraph (c)(2) of this section), then A may not furnish a Form W–9 because it may not represent that it is a U.S. person for purposes of the provisions of chapters 3, 4, and 61 of the Code, and section 3406. Therefore, A must furnish a Form W–8 with the name, address, and taxpayer identifying number (TIN) (if required) of the foreign person who is the

single owner in the same manner as if the account were opened directly by the foreign single owner. See §§ 1.894–1T(d) and 1.1441–6(b)(2) for special rules where the entity's owner is claiming a reduced rate of withholding under an income tax treaty.

(B) [Reserved] For further guidance, see § 1.1441–1(b)(2)(iii)(B).

(iv) *Payments to a U.S. branch of certain foreign banks or foreign insurance companies*—(A) *U.S. branch treated as a U.S. person in certain cases.* A payment to a U.S. branch of a foreign person is a payment to a foreign person. However, a U.S. branch of a participating FFI, registered deemed compliant FFI or NFFE that is described in this paragraph (b)(2)(iv)(A) may agree to be treated as a U.S. person for purposes of withholding on specified payments to the U.S. branch. See § 1.1471–3(d) for rules regarding how a withholding agent may determine the chapter 4 status of an entity. If a U.S. branch agrees to be treated as a U.S. person with a withholding agent, it is required to act as a U.S. person with respect to all other withholding agents, including when acting as an intermediary with respect to withholdable payments for purposes of chapter 4. See § 1.1471–3(a)(3)(iv). In such cases, the U.S. branch is treated as a payee that is a U.S. person. Notwithstanding the preceding sentence, a withholding agent making a payment to a U.S. branch treated as a U.S. person under this paragraph (b)(2)(iv)(A) shall not treat the branch as a U.S. person for purposes of reporting the payment made to the branch. Therefore, a payment to such U.S. branch shall be reported on Form 1042–S under § 1.1461–1(c) and § 1.1474–1(d)(1)(i) for a payment of U.S. source FDAP income that is a chapter 4 reportable amount as defined in § 1.1471–1(b)(18). Further, a U.S. branch that is treated as a U.S. person under this paragraph (b)(2)(iv)(A) shall not be treated as a U.S. person for purposes of the withholding certificate it provides to a withholding agent. Therefore, the U.S. branch must furnish a U.S. branch withholding certificate on a Form W–8IMY as provided in paragraph (e)(3)(v) of this section and not a Form W–9. An agreement to treat a U.S. branch as a U.S. person must be evidenced by a U.S. branch withholding certificate described in paragraph (e)(3)(v) of this section furnished by the U.S. branch to the withholding agent. A U.S. branch described in this paragraph (b)(2)(iv)(A) is any U.S. branch of a foreign bank subject to regulatory supervision by the Federal Reserve Board or a U.S. branch of a foreign insurance company required to file an annual statement on a form approved by the National Association of Insurance Commissioners with the Insurance Department of a State, a Territory, or the District of Columbia. In addition, a territory financial institution (including a territory financial institution that is a flow-through entity) will be treated as a U.S. branch for purposes of this paragraph (b)(2)(iv)(A). The Internal Revenue Service (IRS) may approve a list of U.S. branches that may qualify for treatment as a U.S. person under this paragraph (b)(2)(iv)(A) (see § 601.601(d)(2) of this chapter). See § 1.6049–5(c)(5)(vi) for the treatment of U.S. branches as U.S. payors if they make a payment that is subject to reporting under chapter 61 of the Internal Revenue Code. Also see § 1.6049–5(d)(1)(ii) for the treatment of U.S. branches as foreign payees under chapter 61 of the Internal Revenue Code.

(B) [Reserved] For further guidance, see § 1.1441–1(b)(2)(iv)(B).

(*1*) [Reserved] For further guidance, see § 1.1441–1(b)(2)(iv)(B)(*1*).

(*2*) As a payment directly to the persons whose names are on withholding certificates or other appropriate documentation forwarded by the U.S. branch to the withholding agent when no agreement is in effect to treat the U.S. branch as a U.S. person for such payment, to the extent the withholding agent can reliably associate the payment with such certificates or documentation;

(*3*) As a payment to a foreign person of income that is effectively connected with the conduct of a trade or business in the United States if the withholding agent has obtained an EIN for the branch and cannot reliably associate the payment with a withholding certificate from a U.S. branch (or any other certificate or other appropriate documentation from another person). See § 1.1441–4(a)(2)(ii); or

(*4*) As a payment to a foreign person of income that is not effectively connected with the conduct of a trade or business in the United States if the withholding agent has not obtained an EIN for the branch and cannot reliably associate the payment with a withholding certificate from the U.S. branch.

(C) *Consequences to the U.S. branch.* A U.S. branch that is treated as a U.S. person under paragraph (b)(2)(iv)(A) of this section shall be treated as a separate person for purposes of section 1441(a) and all other provisions of chapters 3 and 4 of the Internal Revenue Code and the regulations thereunder (other than for purposes of reporting the payment to the U.S. branch under §1.1461–1(c) and §1.1474–1(d)(1)(i) for a chapter 4 reportable amount) or for purposes of the documentation such a branch must furnish under paragraph (e)(3)(v) of this section) for any payment that it receives as such. Thus, the U.S. branch shall be responsible for withholding on the payment in accordance with the provisions under chapters 3 and 4 of the Internal Revenue Code and the regulations thereunder and other applicable withholding provisions of the Internal Revenue Code. For this purpose, it shall obtain and retain documentation from payees or beneficial owners of the payments that it receives as a U.S. person in the same manner as if it were a separate entity. For example, if a U.S. branch receives a payment on behalf of its home office and the home office is a qualified intermediary, the U.S. branch must obtain a qualified intermediary withholding certificate described in paragraph (e)(3)(ii) of this section from its home office. In addition, a U.S. branch that has not provided documentation to the withholding agent for a payment that is, in fact, not effectively connected income is a withholding agent with respect to that payment. See paragraph (b)(6) of this section and §1.1441–4(a)(2)(ii).

(D) [Reserved] For further guidance, see §1.1441–1(b)(2)(iv)(D).

(E) *Payments to other U.S. branches.* Similar withholding procedures may apply to payments to U.S. branches that are not described in paragraph (b)(2)(iv)(A) of this section to the extent permitted by the IRS. Any such branch must establish that its situation is analogous to that of a U.S. branch described in paragraph (b)(2)(iv)(A) of this section. In the alternative, the branch must establish that the withholding and reporting requirements under chapter 3 of the Code and the regulations thereunder impose an undue administrative burden and that the collection of the tax imposed by section 871(a) or 881(a) on the foreign person (or its members in the case of a foreign partnership) will not be jeopardized by the exemption from withholding. Generally, an undue administrative burden will be found to exist in a case where the person entitled to the income, such as a foreign insurance company, receives from the withholding agent income on securities issued by a single corporation, some of which is, and some of which is not, effectively connected with conduct of a trade or business within the United States and the criteria for determining the effective connection are unduly difficult to apply because of the circumstances under which such securities are held. No exemption from withholding shall be granted under this paragraph (b)(2)(iv)(E) unless the person entitled to the income complies with such other requirements as may be imposed by the IRS and unless the IRS is satisfied that the collection of the tax on the income involved will not be jeopardized by the exemption from withholding. The IRS may prescribe such procedures as are necessary to make these determinations (see §601.601(d)(2) of this chapter).

(v) [Reserved] For further guidance, see §1.1441–1(b)(2)(v).

(vi) *Other payees.* A payment to a person described in §1.6049–4(c)(1)(ii) that the withholding agent would treat as a payment to a foreign person without obtaining documentation for purposes of information reporting under section 6049 (if the payment were interest) is treated as a payment to a foreign payee for purposes of chapter 3 of the Code and the regulations thereunder (or to a foreign beneficial owner to the extent provided in paragraph (e)(1)(ii)(A) (*6*) or (*7*) of this section). Further, a payment that the withholding agent can reliably associate

with documentary evidence described in § 1.6049–5(c)(1) relating to the payee is treated as a payment to a foreign payee. See § 1.1441–5(b)(1) and (c)(1) for payee determinations for payments to partnerships. See § 1.1441–5(e) for payee determinations for payments to foreign trusts or foreign estates.

(vii) [Reserved] For further guidance, see § 1.1441–1(b)(2)(vii) introductory text and (b)(2)(vii)(A).

(B) *Special rules applicable to a withholding certificate from a nonqualified intermediary or flow-through entity—(1)* In the case of a payment made to a nonqualified intermediary, a flow-through entity (as defined in paragraph (c)(23) of this section), or a U.S. branch described in paragraph (b)(2)(iv) of this section (other than a U.S. branch that is treated as a U.S. person), a withholding agent can reliably associate the payment with valid documentation only to the extent that, prior to the payment, the withholding agent can allocate the payment to a valid nonqualified intermediary, flow-through, or U.S. branch withholding certificate (and a withholding certificate provided by a nonparticipating FFI with respect to a portion of a payment that is a withholdable payment allocated to an exempt beneficial owner as described in § 1.1471–3(c)(3)(iii)(B)(*4*)); the withholding agent can reliably determine how much of the payment relates to valid documentation provided by a payee as determined under paragraph (c)(12) of this section (*i.e.*, a person that is not itself an intermediary, flow-through entity, or U.S. branch); and the withholding agent has sufficient information to report the payment on Form 1042–S or Form 1099, if reporting is required. See, however, paragraph (e)(3)(iv) of this section for when a nonqualified intermediary may report payees to the withholding agent in a chapter 4 withholding rate pool, in which case a withholding agent need not associate the portion of the payment attributable to such payees with documentation from each such payee. See also paragraph (e)(3)(iii) of this section for the requirements of a nonqualified intermediary withholding certificate, paragraph (e)(3)(v) of this section for the requirements of a U.S. branch certificate, and §§ 1.1441–5(c)(3)(iii) and (e)(5)(iii) for the requirements of a flow-through withholding certificate (including the requirements for a withholding certificate associated with a withholdable payment). Thus, a payment cannot be reliably associated with valid documentation provided by a payee to the extent such documentation is lacking or unreliable, or to the extent that information required to allocate and report all or a portion of the payment to each payee is lacking or unreliable. If a withholding certificate attached to an intermediary, U.S. branch, or flow-through withholding certificate is another intermediary, U.S. branch, or flow-through withholding certificate, the rules of this paragraph (b)(2)(vii)(B) apply by treating the share of the payment allocable to the other intermediary, U.S. branch, or flow-through entity as if the payment were made directly to such other entity. See paragraph (e)(3)(iv)(D) of this section for rules permitting information allocating a payment to documentation to be received after the payment is made.

(*2*) The rules of paragraph (b)(2)(vii)(B)(*1*) of this section are illustrated by the following examples. Each example illustrates a payment that is not a withholdable payment and, therefore, neither the chapter 4 status of the NQI nor payee specific documentation is required to be provided to the withholding agent (and no withholding applies under chapter 4 on each payment). See paragraph (e)(3)(iv)(C) of this section for the requirements of a withholding statement provided by a nonqualified intermediary that receives a withholdable payment and for an example illustrating the requirements of an NQI providing a withholding statement to a withholding agent for a withholdable payment.

Example 1. WA, a withholding agent, makes a payment of U.S. source interest with respect to a grandfathered obligation as described in § 1.1471–2(b) (and thus the payment is not a withholdable payment) to NQI, an intermediary that is a nonqualified intermediary. NQI provides a valid intermediary withholding certificate under paragraph (e)(3)(iii) of this section. NQI does not, however, provide valid documentation from the persons on whose behalf it receives the interest payment, and, therefore, the interest payment cannot be reliably associated with

valid documentation provided by a payee. WA must apply the presumption rules of paragraph (b)(3)(v) of this section to the payment.

Example 2. The facts are the same as in *Example 1,* except that NQI does attach valid beneficial owner withholding certificates (as defined in paragraph (e)(2)(i) of this section) from A, B, C, and D establishing their status as foreign persons. NQI does not, however, provide WA with any information allocating the payment among A, B, C, and D and, therefore, WA cannot determine the portion of the payment that relates to each beneficial owner withholding certificate. The interest payment cannot be reliably associated with valid documentation from a payee and WA must apply the presumption rules of paragraph (b)(3)(v) of this section to the payment. See, however, paragraph (e)(3)(iv)(D) of this section providing for alternative procedures that allow a nonqualified intermediary to provide allocation information after a payment is made.

Example 3. The facts are the same as in *Example 2,* except that NQI provides allocation information associated with its intermediary withholding certificate indicating that 25% of the interest payment is allocable to A and 25% to B. NQI does not provide any allocation information regarding the remaining 50% of the payment. WA may treat 25% of the payment as made to A and 25% as made to B. The remaining 50% of the payment cannot be reliably associated with valid documentation from a payee, however, since NQI did not provide information allocating the payment. Thus, the remaining 50% of the payment is subject to the presumption rules of paragraph (b)(3)(v) of this section.

Example 4. WA makes a payment of U.S. source interest to NQI1, an intermediary that is not a qualified intermediary. NQI1 provides WA with a valid nonqualified intermediary withholding certificate as well valid beneficial owner withholding certificates from A and B and a valid nonqualified intermediary withholding certificate from NQI2. NQI2 has provided valid beneficial owner documentation from C sufficient to establish C's status as a foreign person. Based on information provided by NQI1, WA can allocate 20% of the interest payment to A, and 20% to B. Based on information that NQI2 provided NQI1 and that NQI1 provides to WA, WA can allocate 60% of the payment to NQI2, but can only allocate one half of that payment (30%) to C. Therefore, WA cannot reliably associate the remainder of the payment made to NQI2 (30% of the total payment) with valid documentation and must apply the presumption rules of paragraph (b)(3)(v) of this section to that portion of the payment.

(C) *Special rules applicable to a withholding certificate provided by a qualified intermediary that does not assume primary withholding responsibility*—(*1*) If a payment is made to a qualified intermediary that does not assume primary withholding responsibility under chapter 3 of the Internal Revenue Code or primary Form 1099 reporting and backup withholding responsibility under chapter 61 and section 3406 of the Internal Revenue Code for the payment, a withholding agent can reliably associate the payment with valid documentation only to the extent that, prior to the payment, the withholding agent has received a valid qualified intermediary withholding certificate described in paragraph (e)(3)(ii) of this section and the withholding agent can reliably determine the portion of the payment that relates to a chapter 3 withholding rate pool, as defined in paragraph (c)(44) of this section, a chapter 4 withholding rate pool (including for a withholdable payment as described in paragraph (e)(5)(v)(C)(*2*) of this section) as defined in paragraph (c)(48) of this section, or a pool attributable to U.S. exempt recipients. In the case of a withholding rate pool attributable to a U.S. non-exempt recipient, a payment cannot be reliably associated with valid documentation unless, prior to the payment, the qualified intermediary has provided the U.S. person's Form W–9 (or, in the absence of the form, the name, address, and TIN, if available, of the U.S. person) and sufficient information for the withholding agent to report the payment on Form 1099. See, however, paragraph (e)(5)(v)(C)(*3*) of this section for alternative procedures for allocating payments among U.S. non-exempt recipients and paragraphs (e)(5)(v)(C)(*1*) and (*2*) of this section for when a chapter 4 withholding rate pool of U.S. payees may be provided by a qualified intermediary instead of documentation with respect to each U.S. non-exempt recipient.

(*2*) The rules of this paragraph (b)(2)(vii)(C) are illustrated by the following examples:

Example 1. WA, a withholding agent, makes a payment of U.S. source dividends that is a withholdable payment to QI. QI provides WA with a valid qualified intermediary withholding certificate on which it indicates that

it does not assume primary withholding responsibility under chapters 3 and 4 or primary Form 1099 reporting and backup withholding responsibility under chapter 61 and section 3406. QI does not provide any information allocating the dividend to withholding rate pools. WA cannot reliably associate the payment with valid payee documentation and therefore must apply the presumption rules applicable to a withholdable payment under §1.1471–3(f)(5) to determine the status of the payee for purposes of chapter 4. See *Example 2* for an application of the presumption rules under §1.1471–3(f).

Example 2. WA makes a payment of U.S. source dividends that is a withholdable payment to QI, which is an NFFE. QI has 5 customers: A, B, C, D, and E, all of whom are individuals except for C. QI has obtained valid documentation from A and B establishing their entitlement to a 15% rate of tax on U.S. source dividends under an income tax treaty. C is a U.S. person that is an exempt recipient as defined in paragraph (c)(20) of this section. D and E are U.S. non-exempt recipients who have provided Forms W–9 to QI. A, B, C, D, and E are each entitled to 20% of the dividend payment. QI provides WA with a valid qualified intermediary withholding certificate as described in paragraph (e)(3)(ii) of this section with which it associates the Forms W–9 from D and E. QI associates the following allocation information with its qualified intermediary withholding certificate: 40% of the payment is allocable to the 15% chapter 3 withholding rate pool, and 20% is allocable to each of D and E. QI does not provide any allocation information regarding the remaining 20% of the payment. WA cannot reliably associate 20% of the payment with valid documentation and, therefore, must apply the presumption rules applicable to a withholdable payment. Because QI is receiving a withholdable payment as an intermediary, under paragraph (b)(3)(iii) of this section WA must apply the presumption rule of §1.1471–3(f)(5) to treat the portion of the payment that cannot reliably be associated with valid documentation as made to a nonparticipating FFI account holder of QI. As a result, WA is required to withhold at a 30% rate of tax under chapter 4. See §1.1441–3(a)(2) permitting WA to credit the amount withheld under chapter 4 against the liability for tax due on the payment under section 1441. The 40% of the payment allocable to the 15% withholding rate pool, and the portion of the payments allocable to D and E are payments that can be reliably associated with documentation.

(D) Special rules applicable to a withholding certificate provided by a qualified intermediary that assumes primary withholding responsibility under chapter 3 of the Internal Revenue Code—(*1*) In the case of a payment made to a qualified intermediary that assumes primary withholding responsibility under chapter 3 of the Internal Revenue Code with respect to that payment (but does not assume primary Form 1099 reporting and backup withholding responsibility under chapter 61 of the Internal Code and section 3406), a withholding agent can reliably associate the payment with valid documentation only to the extent that, prior to the payment, the withholding agent has received a valid qualified intermediary withholding certificate and the withholding agent can reliably determine the portion of the payment that relates to the withholding rate pool for which the qualified intermediary assumes primary withholding responsibility and the portion of the payment attributable to withholding rate pools for each U.S. non-exempt recipient for whom the qualified intermediary has provided a Form W–9 (or, in absence of the form, the name, address, and TIN, if available, of the U.S. non-exempt recipient). See paragraph (e)(5)(iv) of this section (requiring a qualified intermediary assuming primary withholding responsibility under chapter 3 to assume primary withholding responsibility under chapter 4). See also paragraph (e)(5)(v)(C)(*3*) of this section for alternative allocation procedures for payments made to U.S. persons that are not exempt recipients and paragraphs (e)(5)(v)(C)(*1*) and (*2*) of this section for when a qualified intermediary may provide a chapter 4 withholding rate pool of U.S. payees to a withholding agent instead of documentation with respect to each U.S. non-exempt recipient.

(*2*) *Examples*. The following examples illustrate the rules of paragraph (b)(2)(vii)(D)(*1*) of this section. However, see the example in paragraph (e)(5)(v)(D) for rules for reporting of U.S. non-exempt recipients when a qualified intermediary that is an FFI reports a U.S. account under chapter 4.

Example 1. WA makes a payment of U.S. source interest that is a withholdable payment to QI, a qualified intermediary that is an NFFE. QI provides WA with a withholding certificate that indicates that QI will assume primary withholding responsibility under chapters 3 and 4 of the Internal Revenue

Code with respect to the payment. In addition, QI attaches a Form W–9 from A, a U.S. non-exempt recipient, as defined in paragraph (c)(21) of this section, and provides the name, address, and TIN of B, a U.S. person that is also a non-exempt recipient but who has not provided a Form W–9. QI associates a withholding statement with its qualified intermediary withholding certificate indicating that 10% of the payment is attributable to A, and 10% to B, and that QI will assume primary withholding responsibility for chapters 3 and 4 with respect to the remaining 80% of the payment. WA can reliably associate the entire payment with valid documentation. Although under the presumption rule of paragraph (b)(3)(v) of this section, an undocumented person receiving U.S. source interest is generally presumed to be a foreign person, WA has actual knowledge that B is a U.S. non-exempt recipient and therefore must report the payment on Form 1099 and backup withhold on the interest payment under section 3406.

Example 2. The facts are the same as in *Example 1*, except that no information has been provided for the 20% of the payment that is allocable to A and B. Thus, QI has accepted withholding responsibility for 80% of the payment, but has provided no information for the remaining 20%. In this case, 20% of the payment cannot be reliably associated with valid documentation, and, under paragraph (b)(3)(iii) of this section, WA must apply the presumption rule of § 1.1471–3(f)(5) (because the payment is a withholdable payment). See the *Example 2* in paragraph (b)(2)(vii)(C)(*2*).

(E) *Special rules applicable to a withholding certificate provided by a qualified intermediary that assumes primary Form 1099 reporting and backup withholding responsibility but not primary withholding under chapter 3*—(*1*) If a payment is made to a qualified intermediary that assumes primary Form 1099 reporting and backup withholding responsibility for the payment (but does not assume primary withholding responsibility under chapters 3 and 4 of the Internal Revenue Code), a withholding agent can reliably associate the payment with valid documentation only to the extent that, prior to the payment, the withholding agent has received a valid qualified intermediary withholding certificate and the withholding agent can reliably determine the portion of the payment that relates to a withholding rate pool or pools provided as part of the qualified intermediary's withholding statement and the portion of the payment for which the qualified intermediary assumes primary Form 1099 reporting and backup withholding responsibility. See paragraph (e)(5)(v)(C)(*2*) of this section for when a qualified intermediary may include a chapter 4 withholding rate pool on a withholding statement provided to a withholding agent with respect to a withholdable payment.

(*2*) The following example illustrates the rules of paragraph (b)(2)(vii)(D)(*1*) of this section:

Example. WA, a withholding agent, makes a payment of U.S. source dividends that is a withholdable payment to QI, a qualified intermediary and participating FFI. QI has provided WA with a valid qualified intermediary withholding certificate. QI states on its withholding statement accompanying the certificate that it assumes primary Form 1099 reporting and backup withholding responsibility but does not assume primary withholding responsibility under chapters 3 and 4 of the Internal Revenue Code. QI represents that 15% of the dividend is subject to a 30% rate of withholding, 75% of the dividend is subject to a 15% rate of withholding. QI represents that it assumes primary Form 1099 reporting and backup withholding for the remaining 10% of the payment, and therefore need not provide a chapter 4 withholding rate pool with respect to this portion of the payment or documentation with respect to U.S. non-exempt recipients. The entire payment can be reliably associated with valid documentation.

(F) *Special rules applicable to a withholding certificate provided by a qualified intermediary that assumes primary withholding responsibility under chapter 3 and primary Form 1099 reporting and backup withholding responsibility and a withholding certificate provided by a withholding foreign partnership or a withholding foreign trust*. If a payment is made to a qualified intermediary that assumes both primary withholding responsibility under chapters 3 and 4 of the Internal Revenue Code and primary Form 1099 reporting and backup withholding responsibility under chapter 61 and section 3406 of the Internal Revenue Code for the payment, a withholding agent can reliably associate a payment with valid documentation provided that it receives a valid qualified intermediary withholding certificate as described in paragraph (e)(3)(ii) of this section. In

the case of a payment made to a withholding foreign partnership or a withholding foreign trust, the withholding agent can reliably associate the payment with valid documentation to the extent it can associate the payment with a valid withholding certificate described in §1.1441–5(c)(2)(iv) or in §1.1441–5(e)(5)(v) (respectively). See paragraph (e)(5)(iv) of this section, providing that a qualified intermediary assuming primary withholding responsibility under chapter 3 must also assume primary withholding responsibility under chapter 4 with respect to a withholdable payment.

(3) *Presumptions regarding payee's status in the absence of documentation*—(i) *General rules.* A withholding agent that cannot, prior to the payment, reliably associate (within the meaning of paragraph (b)(2)(vii) of this section) a payment of an amount subject to withholding (as described in §1.1441–2(a)) with valid documentation may rely on the presumptions of this paragraph (b)(3) to determine the status of the person receiving the payment as a U.S. or a foreign person and the person's other relevant characteristics (for example, as an owner or intermediary, as an individual, trust, partnership, or corporation). The determination of withholding and reporting requirements applicable to payments to a person presumed to be a foreign person is governed only by the provisions of chapters 3 and 4 of the Code and the regulations thereunder. For the determination of withholding and reporting requirements applicable to payments to a person presumed to be a U.S. person, see chapter 61 of the Code, section 3402, 3405, or 3406, and, with respect to the reporting requirements of a participating FFI or registered deemed-compliant FFI, see chapter 4 of the Code and the related regulations. A presumption that a payee is a foreign payee is not a presumption that the payee is a foreign beneficial owner. Therefore, the provisions of this paragraph (b)(3) have no effect for purposes of reducing the withholding rate if associating the payment with documentation of foreign beneficial ownership is required as a condition for such rate reduction. See paragraph (b)(3)(ix) of this section for consequences to a withholding agent that fails to withhold in accordance with the presumptions set forth in this paragraph (b)(3) or if the withholding agent has actual knowledge or reason to know of facts that are contrary to the presumptions set forth in this paragraph (b)(3). See paragraph (b)(2)(vii) of this section for rules regarding the extent to which a withholding agent can reliably associate a payment with documentation.

(ii) *Presumptions of classification as individual, corporation, partnership, etc.*—(A) *In general.* A withholding agent that cannot reliably associate a payment with a valid withholding certificate or that has received valid documentary evidence under §§1.1441–1(e)(1)(ii)(A)(*2*) and 1.6049–5(c)(1) or (4) but cannot determine a payee's classification from the documentary evidence must apply the rules of this paragraph (b)(3)(ii) to determine the payee's classification as an individual, trust, estate, corporation, or partnership. The fact that a payee is presumed to have a certain status under the provisions of this paragraph (b)(3)(ii) does not mean that it is excused from furnishing documentation if documentation is otherwise required to obtain a reduced rate of withholding under this section. For example, if, for purposes of this paragraph (b)(3)(ii), a payee is presumed to be a tax-exempt organization based on §1.6049–4(c)(1)(ii)(B), the withholding agent cannot rely on this presumption to reduce the rate of withholding on payments to such person (if such person is also presumed to be a foreign person under paragraph (b)(3)(iii)(A) of this section) because a reduction in the rate of withholding for payments to a foreign tax-exempt organization generally requires that a valid Form W–8 described in §1.1441–9(b)(2) be furnished to the withholding agent.

(B) *No documentation provided.* If the withholding agent cannot reliably associate a payment with a valid withholding certificate or valid documentary evidence, it must presume that the payee is an individual, a trust, or an estate, if the payee appears to be such person (for example, based on the payee's name or information in the customer file). In the absence of reliable indications that the payee is an individual, trust, or an estate, the

withholding agent must presume that the payee is a corporation or one of the persons enumerated under §1.6049–4(c)(1)(ii)(B) through (Q) if it can be so treated under §1.6049–4(c)(1)(ii)(A)(*1*) or any one of the paragraphs under §1.6049–4(c)(1)(ii)(B) through (Q) without the need to furnish documentation. If the withholding agent cannot treat a payee as a person described in §1.6049–4(c)(1)(ii)(A)(*1*) through (Q), then the payee shall be presumed to be a partnership. If such a partnership is presumed to be foreign, it is not the beneficial owner of the income paid to it. See paragraph (c)(6) of this section. If such a partnership is presumed to be domestic, it is a U.S. non-exempt recipient for purposes of chapter 61 of the Internal Revenue Code.

(C) *Documentary evidence furnished for offshore obligation.* If the withholding agent receives valid documentary evidence, as described in §1.6049–5(c)(1) or (c)(4), with respect to an offshore obligation from an entity but the documentary evidence does not establish the entity's classification as a corporation, trust, estate, or partnership, the withholding agent may presume (in the absence of actual knowledge otherwise) that the entity is the type of person enumerated under §1.6049–4 (c)(1)(ii)(B) through (Q) if it can be so treated under any one of those paragraphs without the need to furnish documentation. If the withholding agent cannot treat a payee as a person described in §1.6049–4(c)(1)(ii)(B) through (Q), then the payee shall be presumed to be a corporation unless the withholding agent knows, or has reason to know, that the entity is not classified as a corporation for U.S. tax purposes. If a payee is, or is presumed to be, a corporation under this paragraph (b)(3)(ii)(C) and a foreign person under paragraph (b)(3)(iii) of this section, a withholding agent shall not treat the payee as the beneficial owner of income if the withholding agent knows, or has reason to know, that the payee is not the beneficial owner of the income. For this purpose, a withholding agent will have reason to know that the payee is not a beneficial owner if the documentary evidence indicates that the payee is a bank, broker, intermediary, custodian, or other agent, or is treated under §1.6049–4(c)(1)(ii)(B) through (Q) as such a person. A withholding agent may, however, treat such a person as a beneficial owner if the foreign person provides a statement, in writing and signed by a person with authority to sign the statement, that is attached to the documentary evidence stating it is the beneficial owner of the income.

(iii) *Presumption of U.S. or foreign status.* A payment that the withholding agent cannot reliably associate with documentation is presumed to be made to a U.S. person, except as otherwise provided in this paragraph (b)(3)(iii), in paragraphs (b)(3) (iv) and (v) of this section, or in §1.1441–5 (d) or (e). A withholding agent must treat a payee that is presumed or known to be a trust but for which the withholding agent cannot determine the type of trust in accordance with the presumptions specified in §1.1441–5(e)(6)(ii). In the case of a payment that is a withholdable payment, a withholding agent must apply the presumption rule under §1.1471–3(f) for purposes of chapter 4.

(A) *Payments to exempt recipients—(1) In general.* If a withholding agent cannot reliably associate a payment with documentation from the payee and the payee is an exempt recipient (as determined under the provisions of §1.6049–4(c)(1)(ii) in the case of interest, or under similar provisions under chapter 61 of the Code applicable to the type of payment involved, but not including a payee that the withholding agent may treat as a foreign intermediary in accordance with paragraph (b)(3)(v) of this section), the payee is presumed to be a foreign person and not a U.S. person—

(*i*) If the withholding agent has actual knowledge of the payee's employer identification number and that number begins with the two digits ''98'';

(*ii*) If the withholding agent's communications with the payee are mailed to an address in a foreign country;

(*iii*) If the name of the payee indicates that the entity is the type of entity that is on the per se list of foreign corporations contained in §301.7701–2(b)(8)(i) of this chapter (other than a name which contains the designation ''corporation'' or ''company'');

(*iv*) If the payment is made with respect to an offshore obligation (as defined in paragraph (c)(37) of this section); or

(*v*) Only with respect to an account opened after July 1, 2014, if the withholding agent has a telephone number for the person outside of the United States.

(*2*) *Special rule for withholdable payments made to exempt recipients.* Notwithstanding the provisions of paragraph (b)(3)(iii)(A)(*1*) of this section, a payment that is also a withholdable payment made to an entity determined to be an exempt recipient under § 1.6049–4(c)(1)(ii)(A)(*1*), (F), (G), (H), (M), (O), (P), or (Q) in the case of interest (or under similar provisions in chapter 61 applicable to the type of income) shall be presumed made to a foreign payee in the absence of documentation (including documentary evidence) establishing the entity as a U.S. person. Additionally, a withholding agent may apply the rule provided in this paragraph (b)(3)(iii)(A)(*2*) instead of the rule in provided in paragraph (b)(3)(iii)(A)(*1*) of this section for all payments with respect to an obligation. The provisions of this paragraph (b)(3)(iii)(A)(*2*) will not apply, however, to a withholdable payment made with respect to a preexisting obligation to a payee that the withholding agent determined prior to July 1, 2014 to be a U.S. exempt recipient.

(B) and (C) [Reserved] For further guidance, see § 1.1441–1(b)(3)(iii)(B) and (C).

(D) *Payments with respect to offshore obligations.* A payment is presumed made to a foreign payee if the payment is made outside the United States (as defined in § 1.6049–5(e)) with respect to an offshore obligation (as defined in paragraph (c)(37) of this section) and the withholding agent does not have actual knowledge that the payee is a U.S. person. See § 1.6049–5(d)(2) and (3) for exceptions to this rule.

(E) [Reserved] For further guidance, see § 1.1441–1(b)(3)(iii)(E).

(iv) *Grace period.* A withholding agent may choose to apply the provisions of § 1.6049–5(d)(2)(ii) regarding a 90-day grace period for purposes of this paragraph (b)(3) (by applying the term withholding agent instead of the term payor) to amounts described in § 1.1441–6(c)(2) and to amounts covered by a Form 8233 described in § 1.1441–4(b)(2)(ii). Thus, for these amounts, a withholding agent may choose to treat the payee as a foreign person and withhold under chapter 3 of the Internal Revenue Code (and the regulations thereunder) while awaiting documentation. For purposes of determining the rate of withholding under this section, the withholding agent must withhold at the unreduced 30-percent rate at the time that the amounts are credited to an account. For reporting of amounts credited both before and after the grace period, see § 1.1461–1(c)(4)(i)(A). The following adjustments shall be made at the expiration of the grace period:

(A) If, at the end of the grace period, the documentation is not furnished in the manner required under this section and the account holder is presumed to be a U.S. non-exempt recipient, then backup withholding only applies to amounts credited to the account after the expiration of the grace period. Amounts credited to the account during the grace period shall be treated as owned by a foreign payee and adjustments must be made to correct any underwithholding on such amounts in the manner described in § 1.1461–2.

(B) [Reserved] For further guidance, see § 1.1441–1(b)(3)(iv)(B).

(v) [Reserved] For further guidance, see § 1.1441–1(b)(3)(v) introductory text and (b)(3)(v)(A).

(B) *Beneficial owner documentation or allocation information is lacking or unreliable.* Except as otherwise provided in this paragraph (b)(3)(v)(B), any portion of a payment that the withholding agent may treat as made to a foreign intermediary (whether a nonqualified or a qualified intermediary) but that the withholding agent cannot treat as reliably associated with valid documentation under the rules of paragraph (b)(2)(vii) of this section is presumed made to an unknown, undocumented foreign payee. As a result, a withholding agent must deduct and withhold 30 percent from any payment of an amount subject to withholding. If a withholding certificate attached to an intermediary certificate is another intermediary withholding certificate

or a flow-through withholding certificate, the rules of this paragraph (b)(3)(v)(B) (or §1.1441–5(d)(3) or (e)(6)(iii)) apply by treating the portion of the payment allocable to the other intermediary or flow-through entity as if it were made directly to the other intermediary or flow-through entity. Any payment of an amount subject to withholding that is presumed made to an undocumented foreign person must be reported on Form 1042–S. See §1.1461–1(c). See §1.6049–5(d) for payments that are not subject to withholding under chapter 3. However, in the case of a payment that is a withholdable payment made to a foreign intermediary, the presumption rules under §1.1471–3(f)(5) shall apply.

(vi) *U.S. branches and territory financial institutions not treated as a U.S. person.* The rules of paragraph (b)(3)(v)(B) of this section shall apply to payments to a U.S. branch or a territory financial institution described in paragraph (b)(2)(iv)(A) of this section that has provided a withholding certificate as described in paragraph (e)(3)(v) of this section on which it has not agreed to be treated as a U.S. person.

(vii) *Joint payees*—(A) *In general.* Except as provided in paragraph (b)(3)(vii)(B) of this section and this paragraph (b)(3)(vii)(A), if a withholding agent makes a payment to joint payees and cannot reliably associate a payment with valid documentation from all payees, the payment is presumed made to an unidentified U.S. person. If, however, a withholding agent makes a payment that is a withholdable payment and any joint payee does not appear, by its name and other information contained in the account file, to be an individual, then the entire amount of the payment will be treated as made to an undocumented foreign person. See paragraph (b)(3)(iii) of this section for presumption rules that apply in the case of a payment that is a withholdable payment. However, if one of the joint payees provides a Form W–9 furnished in accordance with the procedures described in §§31.3406(d)–1 through 31.3406(d)–5 of this chapter, the payment shall be treated as made to that payee. See §31.3406(h)–2 of this chapter for rules to determine the relevant payee if more than one Form W–9 is provided. For purposes of applying this paragraph (b)(3), the grace period rules in paragraph (b)(3)(iv) of this section shall apply only if each payee meets the conditions described in paragraph (b)(3)(iv) of this section.

(B) *Special rule for offshore obligations.* If a withholding agent makes a payment to joint payees and cannot reliably associate a payment with valid documentation from all payees, the payment is presumed made to an unknown foreign payee if the payment is made outside the United States (as defined in §1.6049–5(e)) with respect to an offshore obligation (as defined in §1.6049–5(c)(1)).

(viii) [Reserved] For further guidance, see §1.1441–1(b)(3)(viii).

(ix) *Effect of reliance on presumptions and of actual knowledge or reason to know otherwise*—(A) *General rule.* Except as otherwise provided in paragraph (b)(3)(ix)(B) of this section, a withholding agent that withholds on a payment under section 3402, 3405 or 3406 in accordance with the presumptions set forth in this paragraph (b)(3) shall not be liable for withholding under this section even if it is later established that the beneficial owner of the payment is, in fact, a foreign person. Similarly, a withholding agent that withholds on a payment under this section in accordance with the presumptions set forth in this paragraph (b)(3) shall not be liable for withholding under section 3402 or 3405 or for backup withholding under section 3406 even if it is later established that the payee or beneficial owner is, in fact, a U.S. person. A withholding agent that, instead of relying on the presumptions described in this paragraph (b)(3), relies on its own actual knowledge to withhold a lesser amount, not withhold, or not report a payment, even though reporting of the payment or withholding a greater amount would be required if the withholding agent relied on the presumptions described in this paragraph (b)(3), shall be liable for tax, interest, and penalties to the extent provided under section 1461 and the regulations under that section. See paragraph (b)(7) of this section for provisions regarding such liability if the withholding agent fails to withhold in accordance with

the presumptions described in this paragraph (b)(3).

(B) [Reserved] For further guidance, see § 1.1441–1(b)(3)(ix)(B).

(x) *Examples*. The provisions of this paragraph (b)(3) are illustrated by the following examples:

Example 1. A withholding agent, W, makes a payment of U.S. source interest with respect to a grandfathered obligation as described in § 1.1471–2(b) (and thus the payment is not a withholdable payment) to person X, Inc. with respect to an account W maintains for X, Inc. outside the United States. W cannot reliably associate the payment to X, Inc. with documentation. Under § 1.6049–4(c)(1)(ii)(A)(*1*), W may treat X, Inc. as a corporation that is an exempt recipient under chapter 61. Thus, under the presumptions described in paragraph (b)(3)(iii) of this section as applicable to a payment to an exempt recipient that is not a withholdable payment, W must presume that X, Inc. is a foreign person (because the payment is made with respect to an offshore obligation). However, W knows that X, Inc. is a U.S. person who is an exempt recipient. W may not rely on its actual knowledge to not withhold under this section. If W's knowledge is, in fact, incorrect, W would be liable for tax, interest, and, if applicable, penalties, under section 1461. W would be permitted to reduce or eliminate its liability for the tax by establishing, in accordance with paragraph (b)(7) of this section, that the tax is not due or has been satisfied. If W's actual knowledge is, in fact, correct, W may nevertheless be liable for tax, interest, or penalties under section 1461 for the amount that W should have withheld based upon the presumptions. W would be permitted to reduce or eliminate its liability for the tax by establishing, in accordance with paragraph (b)(7) of this section, that its actual knowledge was, in fact, correct and that no tax or a lesser amount of tax was due.

Example 2. A withholding agent, W, makes a payment of U.S. source interest with respect to a grandfathered obligation as described in § 1.1471–2(b) (and thus the payment is not a withholdable payment) to Y who does not qualify as an exempt recipient under § 1.6049–4(c)(1)(ii). W cannot reliably associate the payment to Y with documentation. Under the presumptions described in paragraph (b)(3)(iii) of this section, W must presume that Y is a U.S. person who is not an exempt recipient for purposes of section 6049. However, W knows that Y is a foreign person. W may not rely on its actual knowledge to withhold under this section rather than backup withhold under section 3406. If W's knowledge is, in fact, incorrect, W would be liable for tax, interest, and, if applicable, penalties, under section 3403. If W's actual knowledge is, in fact, correct, W may nevertheless be liable for tax, interest, or penalties under section 3403 for the amount that W should have withheld based upon the presumptions. Paragraph (b)(7) of this section does not apply to provide relief from liability under section 3403.

Example 3. A withholding agent, W, makes a payment of U.S. source dividends to X, Inc. with respect to an account that X, Inc. opened with W after June 30, 2014. W cannot reliably associate the payment to X, Inc. with documentation but may treat X, Inc. as an exempt recipient for purposes of this section applying the rules of § 1.6042–3(b)(1)(vii). However, because the dividend payment is a withholdable payment and W did not determine the chapter 3 status of X, Inc. before July 1, 2014, W may treat X, Inc. as a U.S. person that is an exempt recipient only if W obtains documentary evidence supporting X, Inc.'s status as a U.S. person. See paragraph (b)(3)(iii)(A)(*2*) of this section.

Example 4. A withholding agent, W, is a plan administrator who makes pension payments to person X with a mailing address in a foreign country with which the United States has an income tax treaty in effect. Under that treaty, the type of pension income paid to X is taxable solely in the country of residence. The plan administrator has a record of X's U.S. social security number. W has no actual knowledge or reason to know that X is a foreign person. W may rely on the presumption of paragraph (b)(3)(iii)(C) of this section in order to treat X as a U.S. person. Therefore, any withholding and reporting requirements for the payment are governed by the provisions of section 3405 and the regulations under that section.

(4) *List of exemptions from, or reduced rates of, withholding under chapter 3 of the Code*. A withholding agent that has determined that the payee is a foreign person for purposes of paragraph (b)(1) of this section must determine whether the payee is entitled to a reduced rate of withholding under section 1441, 1442, or 1443. This paragraph (b)(4) identifies items for which a reduction in the rate of withholding may apply and whether the rate reduction is conditioned upon documentation being furnished to the withholding agent. Documentation required under this paragraph (b)(4) is documentation that a withholding agent must be able to associate with a payment upon which it can rely to treat the payment as made to a foreign person that is the beneficial owner of the payment in accordance with paragraph (e)(1)(ii) of this section. This paragraph (b)(4) also cross-references

other sections of the Code and applicable regulations in which some of these exceptions, exemptions, or reductions are further explained. See, for example, paragraph (b)(4)(viii) of this section, dealing with effectively connected income, that cross-references § 1.1441–4(a); see paragraph (b)(4)(xv) of this section, dealing with exemptions from, or reductions of, withholding under an income tax treaty, that cross-references § 1.1441–6. This paragraph (b)(4) is not an exclusive list of items to which a reduction of the rate of withholding may apply and, thus, does not preclude an exemption from, or reduction in, the rate of withholding that may otherwise be allowed under the regulations under the provisions of chapter 3 of the Code for a particular item of income identified in this paragraph (b)(4). The exclusions and limitations specified in this paragraph (b)(4) apply for purposes of chapter 3. Additional withholding and documentation requirements may apply to withholding agents under chapter 4 with respect to payments that are withholdable payments. See, for example, § 1.1471–2(a) requiring withholding on withholdable payments made to certain FFIs and § 1.1471–2(a)(4) for payments exempted from withholding under section 1471(a).

(i) Portfolio interest described in section 871(h) or 881(c) and substitute interest payments described in § 1.871–7(b)(2) or 1.881–2(b)(2) are exempt from withholding under section 1441(a). See § 1.871–14 for regulations regarding portfolio interest and section 1441(c)(9) for the exemption from withholding for portfolio interest. Documentation establishing foreign status is required for interest on an obligation in registered form to qualify as portfolio interest. See section 871(h)(2)(B)(ii) and § 1.871–14(c)(1)(ii)(C). For special documentation rules regarding foreign-targeted registered obligations described in § 1.871–14(e)(2) (and issued before January 1, 2016), see § 1.871–14(e) (3) and (4) and, in particular, § 1.871–14(e)(4)(i)(A) and (ii)(A) regarding when the withholding agent must receive the documentation. The documentation furnished for purposes of qualifying interest as portfolio interest serves as the basis for the withholding exemption for purposes of this section and establishing foreign status for purposes of section 6049. See § 1.6049–5(b)(8). Documentation establishing foreign status is not required for qualifying interest on an obligation in bearer form described in § 1.871–14(b)(1) (and issued before March 19, 2012) as portfolio interest. However, in certain cases, documentation for portfolio interest on a bearer obligation may have to be furnished in order to establish foreign status for purposes of the information reporting provisions of section 6049 and backup withholding under section 3406. See § 1.6049–5(b)(7).

(ii) through (xxi) [Reserved] For further guidance, see § 1.1441–1(b)(4)(ii) through (xxi).

(5)(i) through (viii) [Reserved] For further guidance, see § 1.1441–1(b)(5)(i) through (viii).

(ix) Payments to a foreign person that are governed by section 6050W (dealing with payment card and third party network transactions) are exempt from information reporting under § 1.6050W–1(a)(5)(ii).

(6) *Rules of withholding for payments by a foreign intermediary or certain U.S. branches*—(i) *In general.* A foreign intermediary described in paragraph (e)(3)(i) of this section or a U.S. branch or territory financial institution described in paragraph (b)(2)(iv) of this section that receives an amount subject to withholding (as defined in § 1.1441–2(a)) shall be required to withhold (if another withholding agent has not withheld the full amount required) and report such payment under chapter 3 of the Internal Revenue Code and the regulations thereunder except as otherwise provided in this paragraph (b)(6). A nonqualified intermediary, U.S. branch, or territory financial institution described in paragraph (b)(2)(iv) of this section (other than a U.S. branch or territory financial institution that is treated as a U.S. person) shall not be required to withhold or report if it has provided a valid nonqualified intermediary withholding certificate or a U.S. branch withholding certificate, it has provided all of the information required by paragraph (e)(3)(iv) of this section (withholding statement), and it does not know, and has no reason to know, that another withholding agent failed to withhold the correct amount

or failed to report the payment correctly under §1.1461–1(c). The withholding requirement of a nonqualified intermediary under the previous sentence also excludes a case in which withholding under chapter 4 was applied by a withholding agent on the payment. See §1.1441–3(a)(2) (coordinating withholding under chapter 3 with withholding applied under chapter 4 of the Code). A qualified intermediary's obligations to withhold and report shall be determined in accordance with its qualified intermediary withholding agreement.

(ii) *Examples*. The following examples illustrate the rules of paragraph (b)(6)(i) of this section and coordinate rules for withholding that apply under chapter 4 with those that apply under chapter 3. See also paragraph (e)(3)(iv)(C) of this section for the requirements of withholding statements provided by nonqualified intermediaries.

Example 1. FB, a foreign bank, acts as intermediary for five different individuals, A, B, C, D, and E, each of whom owns U.S. securities that generate U.S. source dividends (that are withholdable payments). The dividends are paid by USWA, a U.S. withholding agent. FB furnished USWA with a nonqualified intermediary withholding certificate, described in paragraph (e)(3)(iii) of this section, on which FB certifies its status as a participating FFI (such that withholding under chapter 4 does not apply), to which it attached valid withholding certificates for A, B, C, D, and E. The withholding certificates from A and B claim a 15% reduced rate of withholding under an income tax treaty. C, D, and E claim no reduced rate of withholding. FB provides a withholding statement that meets all of the requirements of paragraph (e)(3)(iv) of this section, including information allocating 20% of each dividend payment to each of A, B, C, D, and E. FB does not have actual knowledge or reason to know that USWA did not withhold the correct amounts or report the dividends on Forms 1042–S to each of A, B, C, D, and E. FB is not required to withhold or to report the dividends to A, B, C, D, and E.

Example 2. The facts are the same as in *Example 1*, except that FB did not provide any information for USWA to determine how much of the dividend payments were made to A, B, C, D, and E. Because USWA could not reliably associate the dividend payments with documentation under paragraph (b)(2)(vii) of this section with respect to a payment that is a withholdable payment, USWA applied the presumption rule of §1.1471–3(f)(5) and withheld 30% from all dividend payments under chapter 4 and filed a Form 1042–S reporting the payment to an account holder of FB that is a non-participating FFI. FB is deemed to know that USWA did not report the payment to A, B, C, D, and E because it did not provide all of the information required on a withholding statement under paragraph (e)(3)(iv) of this section (that is, allocation information). Although FB is not required to withhold on the payment under this section because the full 30% withholding was imposed by USWA, it is required to report the payments on Forms 1042–S to A, B, C, D, and E. FB's intentional failure to do so will subject it to intentional disregard penalties under sections 6721 and 6722.

(7) *Liability for failure to obtain documentation timely or to act in accordance with applicable presumptions*—(i) *General rule*. A withholding agent that cannot reliably associate a payment with valid documentation on the date of payment and that does not withhold under this section, or withholds at less than the 30-percent rate prescribed under section 1441(a) and paragraph (b)(1) of this section, is liable under section 1461 for the tax required to be withheld under chapter 3 of the Code and the regulations thereunder, without the benefit of a reduced rate unless—

(A) The withholding agent has appropriately relied on the presumptions described in paragraph (b)(3) of this section (including the grace period described in paragraph (b)(3)(iv) of this section) in order to treat the payee as a U.S. person or, if applicable, on the presumptions described in §1.1441–4(a)(2)(ii) or (3)(i) to treat the payment as effectively connected income;

(B) The withholding agent can demonstrate to the satisfaction of the district director or the Assistant Commissioner (International) that the proper amount of tax, if any, was in fact paid to the IRS;

(C) No documentation is required under section 1441 or this section in order for a reduced rate of withholding to apply; or

(D) [Reserved] For further guidance, see §1.1441–1(b)(7)(i)(D).

(ii) *Proof that tax liability has been satisfied*. Proof of payment of tax may be established for purposes of paragraph (b)(7)(i)(B) of this section on the basis of a Form 4669 (or such other form as the IRS may prescribe in published

guidance (see § 601.601(d)(2) of this chapter)), establishing the amount of tax, if any, actually paid by or for the beneficial owner on the income. Proof that a reduced rate of withholding was, in fact, appropriate under the provisions of chapter 3 of the Code and the regulations thereunder may also be established after the date of payment by the withholding agent on the basis of a valid withholding certificate or other appropriate documentation furnished after that date that was effective as of the date of payment. A withholding certificate furnished after the date of payment will be considered effective as of the date of the payment if the certificate contains a signed affidavit (either at the bottom of the form or on an attached page) that states that the information and representations contained on the certificate were accurate as of the time of the payment. A certificate obtained within 30 days after the date of the payment will not be considered to be unreliable solely because it does not contain an affidavit. However, in the case of a withholding certificate of an individual received more than a year after the date of payment, the withholding agent will be required to obtain, in addition to the withholding certificate and affidavit, documentary evidence, as described in § 1.1471–3(c)(5)(i), that supports the individual's claim of foreign status or documentary evidence described in § 1.1441–6(c)(4)(i) to support any treaty claim made on the certificate. In the case of a withholding certificate of an entity received more than a year after the date of payment, the withholding agent will be required to obtain, in addition to the withholding certificate and affidavit, documentary evidence described in § 1.1471–3(c)(5)(i) that supports the entity's claim of foreign status or documentary evidence described in § 1.1441–6(c)(4)(ii) to support any treaty claim made on the certificate. If documentation other than a withholding certificate is submitted from a payee more than a year after the date of payment, the withholding agent will be required to obtain from the payee a withholding certificate and affidavit supporting the claim of chapter 3 status as of the time of the payment. See § 1.1471–3(c)(7)(ii) for additional requirements that may apply under chapter 4 for documentation obtained after the date of payment of a withholdable payment.

(iii) [Reserved] For further guidance, see § 1.1441–1(b)(7)(iii).

(iv) *Special rule for determining validity of withholding certificate containing inconsequential errors.* A withholding agent may treat a withholding certificate as valid when the certificate includes an error described as an inconsequential error in § 1.1471–3(c)(7)(i) for which the withholding agent obtains documentation sufficient for supporting a payee's claim of status as a foreign person or, for a payee that is an entity, its classification to the extent permitted under § 1.1471–3(c)(7)(i). For example, if the country of residence is abbreviated in an ambiguous way on a beneficial owner withholding certificate provided to establish the beneficial owner's foreign status, a withholding agent may treat the withholding certificate as valid if it has obtained documentary evidence supporting that the beneficial owner's residence is in a country other than the United States.

(v) *Special effective date.* See paragraph (f)(2)(ii) of this section for the special effective date applicable to this paragraph (b)(7).

(8) and (9) [Reserved] For further guidance, see § 1.1441–1(b)(8) and (9).

(c) *Definitions.* The following definitions apply for purposes of sections 1441 through 1443, 1461, and regulations under those sections. For definitions of terms used in these regulations that are defined under sections 1471 through 1474, see subparagraphs (43) through (56) of this paragraph.

(1) [Reserved] For further guidance, see § 1.1441–1(c)(1).

(2) *Foreign and U.S. person.* The term foreign person means any person that is not a U.S. person, including a QI branch of a U.S. financial institution (as defined in § 1.1471–1(b)(109). Such a branch continues to be a U.S. payor for purposes of chapter 61 of the Internal Revenue Code. See § 1.6049–5(c)(4). A U.S. person is a person described in section 7701(a)(30), the U.S. government (including an agency or instrumentality thereof), a State (including an agency or instrumentality thereof), or

the District of Columbia (including an agency or instrumentality thereof).

(3) and (4) [Reserved] For further guidance, see § 1.1441–1(c)(3) and (4).

(5) *Financial institution and foreign financial institution (FFI).* The term financial institution means a person described in § 1.1471–5(e). The term foreign financial institution or FFI has the meaning set forth in § 1.1471–5(d).

(6) through (9) [Reserved] For further guidance, see § 1.1441–1(c)(6) through (9).

(10) *Chapter 3 of the Code (or chapter 3).* For purposes of the regulations under sections 1441, 1442, and 1443, any reference to chapter 3 of the Code (or chapter 3) shall not include references to sections 1445 and 1446, unless the context indicates otherwise.

(11) [Reserved] For further guidance, see § 1.1441–1(c)(11).

(12) *Payee.* For purposes of chapter 3 of the Internal Revenue Code, the term *payee* of a payment is determined under paragraph (b)(2) of this section, § 1.1441–5(c)(1) (relating to partnerships), and § 1.1441–5(e)(2) and (3) (relating to trusts and estates) and includes foreign persons, U.S. exempt recipients, and U.S. non-exempt recipients. A nonqualified intermediary and a qualified intermediary (to the extent it does not assume primary withholding responsibility) are not payees if they are acting as intermediaries and not the beneficial owner of income. In addition, a flow-through entity (other than a withholding foreign partnership, withholding foreign trust, or qualified intermediary that assumes primary withholding responsibility) is not a payee unless the income is (or is deemed to be) effectively connected with the conduct of a trade or business in the United States. See § 1.6049–5(d)(1) for rules to determine the payee for purposes of chapter 61 of the Internal Revenue Code. See §§ 1.1441–1(b)(3), 1.1441–5(d), and (e)(6) and § 1.6049–5(d)(3) for presumption rules that apply if a payee's identity cannot be determined on the basis of valid documentation. For purposes of chapter 4, the term payee has the meaning set forth in § 1.1471–3(a) with respect to a withholdable payment.

(13) through (15) [Reserved] For further guidance, see § 1.1441–1(c)(13) through (15).

(16) *Withholding certificate.* The term withholding certificate means a Form W–8 described in paragraph (e)(2)(i) of this section (relating to foreign beneficial owners), paragraphs (e)(3)(i) or (e)(5)(i) of this section (relating to foreign intermediaries), § 1.1441–5(c)(2)(iv), (c)(3)(iii), and (e)(5)(iii) (relating to flow-through entities), a Form 8233 described in § 1.1441–4(b)(2), a Form W–9 as described in paragraph (d) of this section, a statement described in § 1.871–14(c)(2)(v) (relating to portfolio interest), or any other certificates that under the Internal Revenue Code or regulations certifies or establishes the status of a payee or beneficial owner as a U.S. or a foreign person.

(17) *Documentary evidence; other appropriate documentation.* The terms documentary evidence or other appropriate documentation refer to documentary evidence that may be provided for payments made outside the United States with respect to offshore obligations in accordance with § 1.6049–5(c)(1) or any other evidence that under the Internal Revenue Code or regulations certifies or establishes the status of a payee or beneficial owner as a U.S. or foreign person. See §§ 1.1441–6(b)(2), (c)(3) and (4) (relating to treaty benefits), and 1.6049–5(c)(1) and (4) (relating to chapter 61 reporting). Also see § 1.1441–4(a)(3)(ii) regarding documentary evidence for notional principal contracts.

(18) through (24) [Reserved] For further guidance, see § 1.1441–1(c)(18) through (c)(24).

(25) *Foreign complex trust.* A foreign complex trust is a foreign trust other than a foreign simple trust or foreign grantor trust.

(26) through (27) [Reserved] For further guidance, see § 1.1441–1(c)(26) through (c)(27).

(28) *Nonwithholding foreign partnership (or NWP).* A nonwithholding foreign partnership is a foreign partnership that is not a withholding foreign partnership, as defined in § 1.1441–5(c)(2)(i).

(29) *Withholding foreign partnership (or WP).* A withholding foreign partnership is defined in § 1.1441–5(c)(2)(i).

(30) *Possessions of the United States or U.S. territory.* For purposes of the regulations under chapters 3 and 61 of the

Internal Revenue Code, the term possessions of the United States or U.S. territory means Guam, American Samoa, the Northern Mariana Islands, Puerto Rico, or the Virgin Islands.

(31) *Amount subject to chapter 3 withholding*. An amount subject to withholding under chapter 3 is an amount described in § 1.1441–2(a).

(32) *EIN*. The term EIN means an employer identification number (also known as a federal tax identification number) described in § 301.6109–1(a)(1)(i).

(33) *Flow-through withholding certificate*. The term flow-through withholding certificate means a Form W–8IMY submitted by a foreign partnership, foreign simple trust, or foreign grantor trust.

(34) *Foreign payee*. The term foreign payee means any payee other than a U.S. payee.

(35) *Intermediary withholding certificate*. The term intermediary withholding certificate means a Form W–8IMY submitted by an intermediary.

(36) *Nonwithholding foreign trust (or NWT)*. The term nonwithholding foreign trust or NWT means a foreign trust as defined in section 7701(a)(31)(B) that is a simple trust or grantor trust and is not a withholding foreign trust.

(37) *Payment with respect to an offshore obligation*. The term payment with respect to an offshore obligation means a payment made outside of the United States, within the meaning of § 1.6049–5(e), with respect to an offshore obligation (as defined in §§ 1.6049–5(c)(1)), 1.6041–1(d), or 1.6042–3(b) (depending on the type of payment).

(38) *Permanent residence address*. The term permanent residence address is the address in the country of which the person claims to be a resident for purposes of that country's income tax. In the case of a withholding certificate furnished in order to claim a reduced rate of withholding under an income tax treaty, the residence must be determined in the manner prescribed under the applicable treaty. See § 1.1441–6(b). The address of a financial institution with which the person maintains an account, a post office box, or an address used solely for mailing purposes is not a permanent residence address unless such address is the only permanent address used by the person and appears as the person's registered address in the person's organizational documents. Further, an address that is provided subject to instructions to hold all mail to that address is not a permanent residence address. If the person is an individual who does not have a tax residence in any country, the permanent address is the place at which the person normally resides. If the person is an entity and does not have a tax residence in any country, then the permanent residence address of the entity is the place at which the person maintains its principal office.

(39) *Standing instructions to pay amounts*. The term *standing instructions to pay amounts* has the meaning set forth in § 1.1471–1(b)(126).

(40) *Territory financial institution*. The term territory financial institution has the meaning set forth in § 1.1471–1(b)(130).

(41) *TIN*. The term TIN means the tax identifying number assigned to a person under section 6109.

(42) *Withholding foreign trust (or WT)*. The term withholding foreign trust (or WT) means a foreign grantor trust or foreign simple trust that has executed the agreement described in § 1.1441–5(e)(5)(v).

(43) *Certified deemed-compliant FFI*. The term certified deemed-compliant FFI means an FFI described in § 1.1471–5(f)(2).

(44) *Chapter 3 withholding rate pool*. The term chapter 3 withholding rate pool has the meaning described in paragraph (e)(5)(v)(C)(*1*) of this section.

(45) *Chapter 3 status*. The term chapter 3 status refers to the attributes of a payee relevant for determining the rate of withholding with respect to a payment made to the payee for purposes of chapter 3.

(46) *Chapter 4 of the Code (or chapter 4)*. The term chapter 4 of the Code (or chapter 4) means sections 1471 through 1474 and the regulations thereunder.

(47) *Chapter 4 status*. The term chapter 4 status means a person's status as a U.S. person, a specified U.S. person, an individual that is a foreign person, a participating FFI, a deemed-compliant

FFI, a restricted distributor, an exempt beneficial owner, a nonparticipating FFI, a territory financial institution, an excepted NFFE, or a passive NFFE.

(48) *Chapter 4 withholding rate pool.* The term chapter 4 withholding rate pool has the meaning set forth § 1.1471–1(b)(20). For when a withholding statement may include a chapter 4 withholding rate pool of U.S. payees for purposes of this section and § 1.1441–5, however, see paragraph (e)(3)(iv)(A) of this section (for a withholding statement provided by a nonqualified intermediary) or paragraph (e)(5)(v)(C)(2) of this section (for a withholding statement provided by a qualified intermediary).

(49) *Deemed-compliant FFI.* The term deemed-compliant FFI means an FFI that is treated, pursuant to section 1471(b)(2) and § 1.1471–5(f), as meeting the requirements of section 1471(b). The term deemed-compliant FFI also includes a QI branch of a U.S. financial institution that is a reporting Model 1 FFI.

(50) *GIIN (or Global Intermediary Identification Number).* The term GIIN or Global Intermediary Identification Number means the identification number that is assigned to a participating FFI or registered deemed-compliant FFI. The term GIIN or Global Intermediary Identification Number also includes the identification number assigned to a reporting Model 1 FFI (as defined in § 1.1471–1(b)(114)) for purposes of identifying such entity to withholding agents. All GIINs will appear on the IRS FFI list.

(51) *NFFE.* The term NFFE or non-financial foreign entity has the meaning set forth in § 1.1471–1(b)(80).

(52) *Nonparticipating FFI.* The term nonparticipating FFI means an FFI other than a participating FFI, a deemed-compliant FFI, or an exempt beneficial owner.

(53) *Participating FFI.* The term participating FFI has the meaning set forth in § 1.1471–1(b)(91).

(54) *Preexisting obligation.* The term preexisting obligation has the meaning set forth in § 1.1471–1(b)(104).

(55) *Registered deemed-compliant FFI.* The term registered deemed- compliant FFI has the meaning set forth in § 1.1471–5(f)(1).

(56) *Withholdable payment.* The term withholdable payment has the meaning set forth in § 1.1473–1(a).

(d) [Reserved] For further guidance, see § 1.1441–1(d) introductory text through (d)(3).

(4) *When a payment to an intermediary or flow-through entity may be treated as made to a U.S. payee.* A withholding agent that makes a payment to an intermediary (whether a qualified intermediary or nonqualified intermediary), a flow-through entity, or a U.S. branch or territory financial institution described in paragraph (b)(2)(iv) of this section may treat the payment as made to a U.S. payee to the extent that, prior to the payment, the withholding agent can reliably associate the payment with a Form W–9 described in paragraph (d)(2) or (3) of this section attached to a valid intermediary, flow-through, or U.S. branch withholding certificate described in paragraph (e)(3)(i) of this section or to the extent the withholding agent can reliably associate the payment with a Form W–8 described in paragraph (e)(3)(v) of this section that evidences an agreement to treat a U.S. branch or territory financial institution described in paragraph (b)(2)(iv) of this section as a U.S. person. In addition, a withholding agent may treat the payment as made to a U.S. payee only if it complies with the electronic confirmation procedures described in paragraph (e)(4)(v) of this section, if required, and it has not been notified by the IRS that any of the information on the withholding certificate or other documentation is incorrect or unreliable. In the case of a Form W–9 that is required to be furnished for a reportable payment that may be subject to backup withholding, the withholding agent may be notified in accordance with section 3406(a)(1)(B) and the regulations under that section. See applicable procedures under section 3406(a)(1)(B) and the regulations under that section for payors who have been notified with regard to such a Form W–9. Withholding agents who have been notified in relation to other Forms W–9, including under section 6724(b) pursuant to section 6721, may rely on the withholding

certificate or other documentation only to the extent provided under procedures as prescribed by the IRS (see § 601.601(d)(2) of this chapter).

(e) through (e)(1)(ii)(A)(*1*) [Reserved] For further guidance, see § 1.1441–1(e) introductory text through (e)(1)(ii)(A)(*1*).

(*2*) That the payment is made outside the United States (within the meaning of § 1.6049–5(e)) with respect to an offshore obligation (within the meaning of paragraph (c)(37) of this section) and the withholding agent can reliably associate the payment with documentary evidence described in §§ 1.1441–6(c)(3) or (4), or 1.6049–5(c)(1) relating to the beneficial owner;

(*3*) That the withholding agent can reliably associate the payment with a valid qualified intermediary withholding certificate, as described in paragraph (e)(3)(ii) of this section, and the qualified intermediary has provided sufficient information for the withholding agent to allocate the payment to a chapter 3 withholding rate pool;

(*4*) through (*7*) [Reserved] For further guidance, see § 1.1441–1(e)(1)(ii)(A)(*4*) through (*7*).

(B) [Reserved] For further guidance, see § 1.1441–1(e)(1)(ii)(B).

(2) [Reserved] For further guidance, see § 1.1441–1(e)(2) introductory text through (e)(2)(i).

(ii) *Requirements for validity of certificate*. A beneficial owner withholding certificate is valid for purposes of a payment of an amount subject to chapter 3 withholding only if it is provided on a Form W–8, or a Form 8233 in the case of personal services income described in § 1.1441–4(b) or certain scholarship or grant amounts described in § 1.1441–4(c) (or a substitute form described in paragraph (e)(4)(vi) of this section or such other form as the IRS may prescribe). A Form W–8 is valid only if its validity period has not expired, it is signed under penalties of perjury by the beneficial owner, and it contains all of the information required on the form. The required information is the beneficial owner's name, permanent residence address (as defined in § 1.1441–1(c)(38)), TIN (if required), a certification that the person is not a U.S. citizen (if the person is an individual) or a certification of the country under the laws of which the beneficial owner is created, incorporated, or governed (if a person other than an individual), the classification of the entity, and such other information as may be required by the regulations under section 1441 or by the form or accompanying instructions in addition to, or in lieu of, the information described in this paragraph (e)(2)(ii) (including when a foreign TIN and an individual's date of birth are required). A beneficial owner withholding certificate must also include the chapter 4 status of a beneficial owner when required for chapter 4 purposes in order to be valid. See paragraph (e)(4)(vii) of this section for circumstances in which a TIN is required on a beneficial owner withholding certificate.

(3) [Reserved] For further guidance, see § 1.1441–1(e)(3) introductory text and (e)(3)(i).

(ii) *Intermediary withholding certificate from a qualified intermediary*. A qualified intermediary shall provide a qualified intermediary withholding certificate for withholdable payments or reportable amounts received by the qualified intermediary. See paragraph (e)(3)(vi) of this section for the definition of reportable amount. A qualified intermediary withholding certificate is valid only if it is furnished on a Form W–8, an acceptable substitute form, or such other form as the IRS may prescribe, it is signed under penalties of perjury by a person with authority to sign for the qualified intermediary, its validity has not expired, and it contains the following information, statement, and certifications—

(A) The name, permanent residence address, qualified intermediary employer identification number (QI–EIN), and the country under the laws of which the intermediary is created, incorporated, or governed. If required for purposes of chapter 4 or if the qualified intermediary is a participating FFI or registered deemed-compliant FFI and certifies that it is providing (or will provide) a chapter 4 withholding rate pool of U.S. payees under § 1.6049–4(c)(4) with respect to accounts that the qualified intermediary maintains, the

withholding certificate must also include the chapter 4 status of the qualified intermediary and its GIIN (if applicable). See paragraph (e)(5)(ii) for the chapter 4 status required of a qualified intermediary, including when a qualified intermediary withholding certificate may include a chapter 4 status of limited FFI (as defined in §1.1471–1(b)(77)). A qualified intermediary that does not act in its capacity as a qualified intermediary must not use its QI–EIN. Rather, the intermediary should provide a nonqualified intermediary withholding certificate, if it is acting as an intermediary, and should use the taxpayer identification number (if any) and GIIN (if applicable) that it uses for all other purposes;

(B) [Reserved] For further guidance, see §1.1441–1(e)(3)(ii)(B).

(C) A certification that the qualified intermediary has provided, or will provide, a withholding statement as required by paragraph (e)(5)(v) of this section;

(D) A certification that the qualified intermediary meets the requirements of §1.6049–4(c)(4) when the qualified intermediary provides (or will provide) a withholding statement associated with its Form W–8 that allocates a payment to a chapter 4 withholding rate pool of U.S. payees that hold accounts with the qualified intermediary. Additionally, when the qualified intermediary provides a chapter 4 withholding rate pool of U.S. payees that do not hold accounts maintained by the qualified intermediary, the qualified intermediary provides a certification on the Form W–8 that the qualified intermediary has obtained (or will obtain) documentation from the intermediary or flow through entity allocating the payment to the pool to establish that the entity's status is as a participating FFI, registered deemed-compliant FFI, or qualified intermediary under §1.1471–3(d)(4) (or, as applicable, §1.1471–3(e)(4)(vi)(B) or §1.1441–1(b)(2)(vii)); and

(E) Any other information, certifications, or statements as may be required by the form or accompanying instructions in addition to, or in lieu of, the information and certifications described in this paragraph (e)(3)(ii) or paragraph (e)(3)(v) of this section. See paragraph (e)(5)(v) of this section for the requirements of a withholding statement associated with the qualified intermediary withholding certificate.

(iii) *Intermediary withholding certificate from a nonqualified intermediary.* A nonqualified intermediary shall provide a nonqualified intermediary withholding certificate for reportable amounts received by the nonqualified intermediary. See paragraph (e)(3)(vi) of this section for the definition of reportable amount. A nonqualified intermediary withholding certificate is valid only to the extent it is furnished on a Form W–8, an acceptable substitute form, or such other form as the IRS may prescribe, it is signed under penalties of perjury by a person authorized to sign for the nonqualified intermediary, it contains the information, statements, and certifications described in this paragraph (e)(3)(iii) and paragraph (e)(3)(iv) of this section, its validity has not expired, and it contains the withholding certificates and other appropriate documentation for all persons to whom the certificate relates are associated with the certificate. Withholding certificates and other appropriate documentation consist of beneficial owner withholding certificates described in paragraph (e)(2)(i) of this section, intermediary and flow-through withholding certificates described in paragraph (e)(3)(i) of this section, withholding foreign partnership and withholding foreign trust certificates described in §1.1441–5(c)(2)(iv) and (e)(5)(iii), documentary evidence described in §§1.1441–6(c)(3) or (4) and 1.6049–5(c)(1), and any other documentation or certificates applicable under other provisions of the Internal Revenue Code or regulations that certify or establish the status of the payee or beneficial owner as a U.S. or a foreign person. If a nonqualified intermediary is acting on behalf of another nonqualified intermediary or a flow-through entity, then the nonqualified intermediary must associate with its own withholding certificate the other nonqualified intermediary withholding certificate or the flow-through withholding certificate and separately identify all of the withholding certificates and other appropriate documentation

that are associated with the withholding certificate of the other nonqualified intermediary or flow-through entity. Nothing in this paragraph (e)(3)(iii) shall require an intermediary to furnish original documentation. Copies of certificates or documentary evidence may be transmitted to the U.S. withholding agent, in which case the nonqualified intermediary must retain the original documentation for the same time period that the copy is required to be retained by the withholding agent under paragraph (e)(4)(iii) of this section and must provide it to the withholding agent upon request. For purposes of this paragraph (e)(3)(iii), a valid intermediary withholding certificate also includes a statement described in § 1.871–14(c)(2)(v) furnished for interest to qualify as portfolio interest for purposes of sections 871(h) and 881(c). The information and certifications required on a Form W–8 described in this paragraph (e)(3)(iii) are as follows—

(A) The name and permanent resident address of the nonqualified intermediary, chapter 4 status (if required for chapter 4 purposes or if the nonqualified intermediary provides the certification described in paragraph (e)(3)(iii)(D) of this section,), GIIN (if applicable), and the country under the laws of which the nonqualified intermediary is created, incorporated, or governed;

(B) [Reserved] For further guidance, see § 1.1441–1(e)(3)(iii)(B).

(C) If the nonqualified intermediary withholding certificate is used to transmit withholding certificates or other appropriate documentation for more than one person on whose behalf the nonqualified intermediary is acting, a withholding statement associated with the Form W–8 that provides all the information required by paragraph (e)(3)(iv) of this section;

(D) If the nonqualified intermediary provides a withholding statement associated with the Form W–8 allocating a payment to a chapter 4 withholding rate pool of U.S. payees, a certification that the nonqualified intermediary meets the requirements of § 1.6049–4(c)(4) with respect to any payees included in such pool that hold accounts maintained (as defined in § 1.1471–5(b)(5)) by the nonqualified intermediary; and

(E) Any other information, certifications, or statements as may be required by the form or accompanying instructions in addition to, or in lieu of, the information, certifications, and statements described in this paragraph (e)(3)(iii) or paragraph (e)(5)(iv) of this section.

(iv) *Withholding statement provided by nonqualified intermediary*—(A) *In general.* A nonqualified intermediary shall provide a withholding statement required by this paragraph (e)(3)(iv) to the extent the nonqualified intermediary is required to furnish, or does furnish, documentation for payees on whose behalf it receives reportable amounts (as defined in paragraph (e)(3)(vi) of this section) or to the extent it otherwise provides the documentation of such payees to a withholding agent. A nonqualified intermediary, however, that is subject to withholding under chapter 4 due to its chapter 4 status as a nonparticipating FFI need not provide a withholding statement unless it is providing documentation with respect to an exempt beneficial owner as described in § 1.1471–3(c)(3)(iii)(B)(*4*). A nonqualified intermediary is not required to disclose to the withholding agent information regarding persons for whom it collects reportable amounts unless it has actual knowledge that any such person is a U.S. non-exempt recipient as defined in paragraph (c)(21) of this section. Information regarding U.S. non-exempt recipients required under this paragraph (e)(3)(iv) must be provided irrespective of any requirement under foreign law that prohibits the disclosure of the identity of an account holder of a nonqualified intermediary or financial information relating to such account holder. A nonqualified intermediary is not required to provide information on a withholding statement regarding U.S. non-exempt recipients, provided that the nonqualified intermediary is a participating FFI (including a reporting Model 2 FFI) or registered deemed-compliant FFI (including a reporting Model 1 FFI) that identifies on the withholding statement the portion of a payment allocable to a chapter 4 withholding rate pool of U.S.

payees to the extent that the nonqualified intermediary is permitted to include such U.S. payees in a pool under §1.6049–4(c)(4)(iii). See §1.1471–3(d)(4) for the requirements of an entity to identify itself as a participating FFI or registered deemed-compliant FFI to a withholding agent for purposes of chapter 4. Although a nonqualified intermediary is not required to provide documentation and other information required by this paragraph (e)(3)(iv) for persons other than U.S. non-exempt recipients not included in a chapter 4 withholding rate pool of U.S. payees, a withholding agent that does not receive documentation and such information must apply the presumption rules of paragraph (b) of this section, §§1.1441–5(d) and (e)(6), 1.6049–5(d), and 1.1471–3(f)(5) (for a withholdable payment) or the withholding agent shall be liable for tax, interest, and penalties. A withholding agent must apply the presumption rules even if it is not required under chapter 61 of the Internal Revenue Code to obtain documentation to treat a payee as an exempt recipient and even though it has actual knowledge that the payee is a U.S. person. For example, if a nonqualified intermediary receives a payment that is not a withholdable payment and fails to provide a withholding agent with a Form W–9 for an account holder that is a U.S. exempt recipient that is not included in a chapter 4 withholding rate pool of U.S. payees to the extent permitted in this paragraph (e)(3)(iv)(A), the withholding agent must presume (even if it has actual knowledge that the account holder is a U.S. exempt recipient) that the account holder is an undocumented foreign person with respect to amounts subject to chapter 3 withholding. See paragraph (b)(3)(v) of this section for applicable presumptions. Therefore, the withholding agent must withhold 30 percent from the payment even though if a Form W–9 had been provided, no withholding or reporting on the payment attributable to a U.S. exempt recipient would apply. Further, a nonqualified intermediary that fails to provide the documentation and the information under this paragraph (e)(3)(iv) for another withholding agent to report the payments on Forms 1042–S (including under the requirements of §1.1474–1(d)(2) for a payment of a chapter 4 reportable amount) and Forms 1099 is not relieved of its responsibility to file information returns. See paragraph (b)(6) of this section. Therefore, unless the nonqualified intermediary itself files such returns and provides copies to the payees, it shall be liable for penalties under sections 6721 (failure to file information returns), and 6722 (failure to furnish payee statements), including the penalties under those sections for intentional failure to file information returns. In addition, failure to provide either the documentation or the information required by this paragraph (e)(3)(iv) results in a payment not being reliably associated with valid documentation. Therefore, the beneficial owners of the payment are not entitled to reduced rates of withholding and if the full amount required to be held under the presumption rules is not withheld by the withholding agent, the nonqualified intermediary must withhold the difference between the amount withheld by the withholding agent and the amount required to be withheld. Failure to withhold shall result in the nonqualified intermediary being liable for tax under section 1461, interest, and penalties, including penalties under section 6656 (failure to deposit) and section 6672 (failure to collect and pay over tax).

(B) *General requirements.* A withholding statement must be provided prior to the payment of a reportable amount and must contain the information specified in paragraph (e)(3)(iv)(C) of this section. The statement must be updated as often as required to keep the information in the withholding statement correct prior to each subsequent payment. The withholding statement forms an integral part of the withholding certificate provided under paragraph (e)(3)(iii) of this section, and the penalties of perjury statement provided on the withholding certificate shall apply to the withholding statement. The withholding statement may be provided in any manner the nonqualified intermediary and the withholding agent mutually agree, including electronically. If the withholding statement is provided electronically as

part of a system established by the withholding agent or nonqualified intermediary to provide the statement, however, there must be sufficient safeguards to ensure that the information received by the withholding agent is the information sent by the nonqualified intermediary and all occasions of user access that result in the submission or modification of the withholding statement information must be recorded. In addition, the electronic system must be capable of providing a hard copy of all withholding statements provided by the nonqualified intermediary. A withholding statement may otherwise be transmitted by a nonqualified intermediary via email or facsimile to a withholding agent under the requirements specified in paragraph (e)(4)(iv)(C) of this section (substituting the term withholding statement for the term Form W–8 or the term document, as applicable). A withholding agent will be liable for tax, interest, and penalties in accordance with paragraph (b)(7) of this section to the extent it does not follow the presumption rules of paragraph (b)(3) of this section or §§ 1.1441–5(d) and (e)(6), and 1.6049–5(d) for any payment of a reportable amount, or portion thereof, for which it does not have a valid withholding statement prior to making a payment. A withholding agent may not treat as valid an allocation of a payment to a chapter 4 withholding rate pool of U.S. payees described in paragraph (e)(3)(iv)(A) of this section or an allocation of a payment to a chapter 4 withholding rate pool of recalcitrant account holders described in paragraph (e)(3)(iv)(C)(*2*) of this section unless the withholding agent identifies the nonqualified intermediary maintaining the account (as described in § 1.1471–5(b)(5)) as a participating FFI (including a reporting Model 2 FFI) or registered deemed-compliant FFI (including a reporting Model 1 FFI) by applying the rules of § 1.1471–3(d)(4).

(C) *Content of withholding statement.* The withholding statement provided by a nonqualified intermediary must contain the information required by this paragraph (e)(3)(iv)(C).

(*1*) *In general.* The withholding statement provided by a nonqualified intermediary must contain the information required by this paragraph (e)(3)(iv)(C).

(*i*) Except as otherwise provided in (e)(3)(iv)(A) of this section (which excludes reporting of information with respect to certain U.S. persons on the withholding statement), the withholding statement must contain the name, address, TIN (if any) and the type of documentation (documentary evidence, Form W–9, or type of Form W–8) for every person from whom documentation has been received by the nonqualified intermediary and provided to the withholding agent and whether that person is a U.S. exempt recipient, a U.S. non-exempt recipient, or a foreign person. See paragraphs (c)(2), (20), and (21) of this section for the definitions of foreign person, U.S. exempt recipient, and U.S. non-exempt recipient. In the case of a foreign person, the statement must indicate whether the foreign person is a beneficial owner or an intermediary, flow-through entity, U.S. branch, or territory financial institution described in paragraph (b)(2)(iv) of this section and include the type of recipient, based on recipient codes applicable for chapter 3 purposes used for filing Forms 1042–S, if the foreign person is a recipient as defined in § 1.1461–1(c)(1)(ii).

(*ii*) The withholding statement must allocate each payment, by income type, to every payee required to be reported on the withholding statement for whom documentation has been provided (including U.S. exempt recipients except as provided in paragraph (e)(3)(iv)(A) of this section). Any payment that cannot be reliably associated with valid documentation from a payee shall be treated as made to an unknown payee in accordance with the presumption rules of paragraph (b) of this section and §§ 1.1441–5(d) and (e)(6) and 1.6049–5(d). For this purpose, a type of income is determined by the types of income required to be reported on Forms 1042–S or 1099, as appropriate. Notwithstanding the preceding sentence, deposit interest (including original issue discount) described in section 871(i)(2)(A) or 881(d) and interest or original issue discount on short-term obligations as described in section 871(g)(1)(B) or 881(e) is only required to be allocated to the extent it is required

to be reported on Form 1099 or Form 1042–S. See § 1.6049–8 (regarding reporting of bank deposit interest to certain foreign persons). If a payee receives income through another nonqualified intermediary, flow-through entity, or U.S. branch or territory financial institution described in paragraph (e)(2)(iv) of this section (other than a U.S. branch or territory financial institution treated as a U.S. person), the withholding statement must also state, with respect to the payee, the name, address, and TIN, if known, of the other nonqualified intermediary or U.S. branch from which the payee directly receives the payment or the flow-through entity in which the payee has a direct ownership interest. If another nonqualified intermediary, flow-through entity, or U.S. branch fails to allocate a payment, the name of the nonqualified intermediary, flow-through entity, or U.S. branch that failed to allocate the payment shall be provided with respect to such payment.

(*iii*) If a payee is identified as a foreign person, the nonqualified intermediary must specify the rate of withholding to which the payee is subject, the payee's country of residence and, if a reduced rate of withholding is claimed, the basis for that reduced rate (e.g., treaty benefit, portfolio interest, exempt under section 501(c)(3), 892, or 895). The allocation statement must also include the taxpayer identification numbers of those foreign persons for whom such a number is required under paragraph (e)(4)(vii) of this section or § 1.1441–6(b)(1) (regarding claims for treaty benefits for which a TIN is provided unless a foreign tax identifying number described in § 1.1441–6(b)(1) is provided). In the case of a claim of treaty benefits, the nonqualified intermediary's withholding statement must also state whether the limitation on benefits and section 894 statements required by § 1.1441–6(c)(5) have been provided, if required, in the beneficial owner's Form W–8 or associated with such owner's documentary evidence.

(*iv*) The withholding statement must also contain any other information the withholding agent reasonably requests in order to fulfill its obligations under chapter 3, chapter 61 of the Internal Revenue Code, and section 3406.

(*2*) *Nonqualified intermediary withholding statement for withholdable payments.* This paragraph (e)(3)(iv)(C)(*2*) modifies the requirements of a withholding statement described in paragraph (e)(3)(iv)(C)(1) of this section that is provided by a nonqualified intermediary with respect to a reportable amount that is a withholdable payment. For such a payment, the requirements applicable to a withholding statement described in paragraph (e)(3)(iv)(A) through (e)(3)(iv)(C)(*1*) of this section shall apply, except that—

(*i*) The withholding statement must include the chapter 4 status (using the applicable status code used for filing Form 1042–S) and GIIN (when required for chapter 4 purposes under § 1.1471–3(d)) of each other intermediary or flow-through entity that is a foreign person and that receives the payment, excluding an intermediary or flow-through entity that is an account holder of or interest holder in a withholding foreign partnership, withholding foreign trust, or qualified intermediary;

(*ii*) If the nonqualified intermediary that is a participating FFI or registered deemed-compliant FFI provides a withholding statement described in § 1.1471–3(c)(3)(iii)(B)(*2*) (describing an FFI withholding statement), the withholding statement may include chapter 4 withholding rate pools with respect to the portions of the payment allocated to nonparticipating FFIs and recalcitrant account holders (to the extent permitted on an FFI withholding statement described in that paragraph) in lieu of providing specific payee information with respect to such persons reported on the statement (including persons subject to chapter 4 withholding) as described in paragraph (e)(3)(iv)(C)(*1*) of this section;

(*iii*) If the nonqualified intermediary provides a withholding statement described in § 1.1471–3(c)(3)(iii)(B)(*3*) (describing a chapter 4 withholding statement), the withholding statement may include chapter 4 withholding rate pools with respect to the portions of the payment allocated to nonparticipating FFIs; and

(*iv*) For a payment allocated to a payee that is a foreign person (other than a person included in a chapter 4 withholding rate pool described in paragraphs (e)(3)(iv)(C)(*2*)(*ii*) and (*iii*) of this section) that is reported on a withholding statement described in §1.1471–3(c)(3)(iii)(B)(*2*) or (c)(3)(iii)(B)(*3*), the withholding statement must include the chapter 4 status of the payee (unless an exception applies for purposes of providing such status under chapter 4) and, for a payee other than an individual, the recipient code for chapter 4 purposes used for filing Form 1042–S.

(3) Example. This example illustrates the principles of paragraph (e)(3)(iv)(C) of this section. WA makes a withholdable payment of U.S. source dividends to NQI, a nonqualified intermediary. NQI provides WA with a valid intermediary withholding certificate under paragraph (e)(3)(iii) of this section that includes NQI's certification of its status for chapter 4 purposes as a participating FFI. NQI provides a withholding statement on which NQI allocates 20% of the payment to a chapter 4 withholding rate pool of recalcitrant account holders of NQI for purposes of chapter 4 and allocates 80% of the payment equally to A and B, individuals that are account holders of NQI. NQI also provides WA with valid beneficial owner withholding certificates from A and B establishing their status as foreign persons entitled to a 15% rate of withholding under an applicable income tax treaty. Because NQI has certified its status as a participating FFI, withholding under chapter 4 is not required with respect to NQI. See §1.1471–2(a)(4). Based on the documentation NQI provided to WA with respect to A and B, WA can reliably associate the payment with valid documentation on the portion of the payment allocated to them and, because the payment is a withholdable payment, may rely on the allocation of the payment for NQI's recalcitrant account holders in a chapter 4 withholding rate pool in lieu of payee information with respect to such account holders. See paragraph (e)(3)(iv)(C)(*2*) of this section for the special rules for a withholding statement provided by a nonqualified intermediary for a withholdable payment. Also see §1.1471–2(a) for WA's withholding requirements under chapter 4 with respect to the portion of the payment allocated to NQI's recalcitrant account holders and §1.1441–3(a)(2) for coordinating withholding under chapter 3 for payments to which withholding is applied under chapter 4.

(D) *Alternative procedures—(1) In general.* Under the alternative procedures of this paragraph (e)(3)(iv)(D), a nonqualified intermediary may provide information allocating a payment of a reportable amount to each payee (including U.S. exempt recipients) otherwise required under paragraph (e)(3)(iv)(B)(2) of this section after a payment is made. To use the alternative procedure of this paragraph (e)(3)(iv)(D), the nonqualified intermediary must inform the withholding agent on a statement associated with its nonqualified intermediary withholding certificate that it is using the procedure under this paragraph (e)(3)(iv)(D) and the withholding agent must agree to the procedure. If the requirements of the alternative procedure are met, a withholding agent, including the nonqualified intermediary using the procedures, can treat the payment as reliably associated with documentation and, therefore, the presumption rules of paragraph (b)(3) of this section and §§1.1441–5(d) and (e)(6) and 1.6049–5(d) do not apply even though information allocating the payment to each payee has not been received prior to the payment. See paragraph (e)(3)(iv)(D)(*7*) of this section, however, for a nonqualified intermediary's liability for tax and penalties if the requirements of this paragraph (e)(3)(iv)(D) are not met. These alternative procedures shall not be used for payments that are allocable to U.S. non-exempt recipients except as provided in paragraph (e)(3)(iv)(D)(2)(*ii*) of this section. Therefore, a nonqualified intermediary is required to provide a withholding agent with information allocating payments of reportable amounts to U.S. non-exempt recipients prior to the payment being made by the withholding agent.

(*2*) *Withholding rate pools—*(*i*) *In general.* In place of the information required in paragraph (e)(3)(iv)(C)(*2*) of this section allocating payments to each payee, the nonqualified intermediary must provide a withholding agent with withholding rate pool information prior to the payment of a reportable amount. The withholding statement must contain all other information required by paragraph (e)(3)(iv)(C) of this section. Further, each payee listed in the withholding

statement must be assigned to an identified withholding rate pool. To the extent a nonqualified intermediary is required to, or does provide, documentation, the alternative procedures do not relieve the nonqualified intermediary from the requirement to provide documentation prior to the payment being made. Therefore, withholding certificates or other appropriate documentation and all information required by paragraph (e)(3)(iv)(C) of this section (other than allocation information) must be provided to a withholding agent before any new payee receives a reportable amount. In addition, the withholding statement must be updated by assigning a new payee to a withholding rate pool prior to the payment of a reportable amount. A withholding rate pool is a payment of a single type of income, determined in accordance with the categories of income used to file Form 1042–S, that is subject to a single rate of withholding. A withholding rate pool may be established by any reasonable method to which the nonqualified intermediary and a withholding agent agree (e.g., by establishing a separate account for a single withholding rate pool, or by dividing a payment made to a single account into portions allocable to each withholding rate pool). The nonqualified intermediary shall determine withholding rate pools based on valid documentation or, to the extent a payment cannot be reliably associated with valid documentation, the presumption rules of paragraph (b)(3) of this section and §§ 1.1441–5(d) and (e)(6) and 1.6049–5(d).

(*ii*) *Withholding rate pools for chapter 4 purposes.* This paragraph (e)(3)(iv)(D)(*2*)(*ii*) modifies the provisions of paragraph (e)(3)(iv)(D)(*2*)(*i*) of this section with respect to the withholding rate pools permitted for the alternative procedures described in paragraph (e)(3)(iv)(D)(*1*) of this section in the case of a payment that is allocable on a withholding statement to a chapter 4 withholding rate pool as described in this paragraph. In the case of a withholdable payment, a nonqualified intermediary may include reportable amounts allocable to a chapter 4 withholding rate pool (other than a chapter 4 withholding rate pool of U.S. payees) in a 30-percent rate pool together with a withholding rate pool for amounts subject to chapter 3 withholding at the 30-percent rate. For a payment of a reportable amount that is allocable to a chapter 4 withholding rate pool of U.S. payees on a withholding statement, a nonqualified intermediary may include such amount in a single withholding rate pool with the amount of the payment that is exempt from withholding under chapter 3 instead of providing documentation regarding U.S. non-exempt recipients included in the pool or separately allocating the amount to the chapter 4 withholding rate pool. To the extent that a nonqualified intermediary allocates an amount to any chapter 4 withholding rate pool, the nonqualified intermediary is required to notify the withholding agent of the allocation before receiving the payment and is not required to provide documentation with respect to the payees included in such pool. The nonqualified intermediary shall determine the chapter 4 withholding rate pools permitted to be used under this paragraph (e)(3)(iv)(D)(*2*)(*ii*) in accordance with the nonqualified intermediary's applicable chapter 4 status and under § 1.1471–3(c)(3)(iii)(B)(*2*) (for an FFI withholding statement) or (c)(3)(iii)(B)(*3*) (for a chapter 4 withholding statement) or under § 1.6049–4(c)(4) for a chapter 4 withholding rate pool of U.S. payees (or similar applicable coordination rule in chapter 61 for payments other than interest). Additionally, the nonqualified intermediary shall identify those payees to which withholding under chapter 4 applies that are not included in a chapter 4 reporting pool (including payees that could be included in a chapter 4 withholding rate pool for whom the nonqualified intermediary chooses to provide payee specific information).

(*3*) *Allocation information.* The nonqualified intermediary must provide the withholding agent with sufficient information to allocate the income in each withholding rate pool to each payee (including U.S. exempt recipients or any chapter 4 withholding rate pool identified by the withholding agent under paragraph (e)(3)(iv)(D)(*2*)(*ii*) of this section) within the pool no later than January 31 of

the year following the year of payment. Any payments that are not allocated to payees for whom documentation has been provided or a chapter 4 withholding rate pool referred to in the previous sentence shall be allocated to an undocumented payee in accordance with the presumption rules of paragraph (b)(3) of this section and §§ 1.1441–5(d) and (e)(6), 1.6049–5(d), and 1.1471–3(f)(5) (for a withholdable payment for chapter 4 purposes). Notwithstanding the preceding sentence, deposit interest (including original issue discount) described in section 871(i)(2)(A) or 881(d) and interest or original issue discount on short-term obligations as described in section 871(g)(1)(B) or 881(e) is not required to be allocated to a U.S. exempt recipient or a foreign payee, except as required under § 1.6049–8 (regarding reporting of deposit interest paid to certain foreign persons).

(*4*) *Failure to provide allocation information.* Except as provided in paragraph (e)(3)(iv)(D)(*5*) of this section, if a nonqualified intermediary fails to provide allocation information, if required, by January 31 for any withholding rate pool to the extent required in paragraph (e)(3)(iv)(D)(3) of this section, a withholding agent shall not apply the alternative procedures of this paragraph (e)(3)(iv)(D) to any payments of reportable amounts paid after January 31 in the taxable year following the calendar year for which allocation information was not given and any subsequent taxable year. Further, the alternative procedures shall be unavailable for any other withholding rate pool (other than a chapter 4 withholding rate pool as otherwise permitted) even though allocation information was given for that other pool. Therefore, the withholding agent must withhold on a payment of a reportable amount in accordance with the presumption rules of paragraph (b)(3) of this section, and §§ 1.1441–5(d) and (e)(6), 1.6049–5(d), and 1.1471–3(f)(5) (for a withholdable payment for chapter 4 purposes), unless the nonqualified intermediary provides all of the information, including information sufficient to allocate the payment to each specific payee or chapter 4 withholding rate pool (as permitted), required by paragraph (e)(3)(iv)(A) through (C) of this section prior to the payment. A nonqualified intermediary must allocate at least 90 percent of the income required to be allocated for each withholding rate pool as required under this paragraph (e)(3)(iv)(D)(*4*) or the nonqualified intermediary will be treated as having failed to provide allocation information for purposes of this paragraph (e)(3)(iv)(D). For purposes of the allocation, a nonqualified intermediary is required to identify by January 31 the portion of the payment that is allocated to each chapter 4 withholding rate pool (rather than the payees included in each such pool). See paragraph (e)(3)(iv)(D)(7) of this section for liability for tax and penalties if a nonqualified intermediary fails to provide allocation information in whole or in part.

(*5*) *Cure provision.* A nonqualified intermediary may cure any failure to provide allocation information by providing the required allocation information to the withholding agent no later than February 14 following the calendar year of payment. If the withholding agent receives the allocation information by that date, it may apply the adjustment procedures of § 1.1461–2 (or of § 1.1474–2 for an amount withheld under chapter 4) to any excess withholding for payments made on or after February 1 and on or before February 14. Any nonqualified intermediary that fails to cure by February 14, may request the ability to use the alternative procedures of this paragraph (e)(3)(iv)(D) by submitting a request, in writing, to the. The request must state the reason that the nonqualified intermediary did not comply with the alternative procedures of this paragraph (e)(3)(iv)(D) and steps that the nonqualified intermediary has taken, or will take, to ensure that no failures occur in the future. If the IRS determines that the alternative procedures of this paragraph (e)(3)(iv)(D) may apply, a determination to that effect will be issued by the IRS to the nonqualified intermediary.

(*6*) *Form 1042–S reporting in case of allocation failure.* If a nonqualified intermediary fails to provide allocation information by February 14 following the year of payment for a withholding rate pool, the withholding agent must file

Forms 1042–S for payments made to each payee in that pool (other than U.S. exempt recipients) in the prior calendar year by pro rating the payment to each payee (including U.S. exempt recipients) listed in the withholding statement for that withholding rate pool, treating as a payee for this purpose each chapter 4 withholding rate pool identified by the nonqualified intermediary under paragraph (e)(3)(iv)(D)(*2*)(*ii*) of this section. If the nonqualified intermediary fails to allocate 10 percent or less of an amount required to be allocated for a withholding rate pool, a withholding agent shall report the unallocated amount as paid to a single unknown payee in accordance with the presumption rules of paragraph (b) of this section and §§1.1441–5(d) and (e)(6), 1.6049–5(d), and §1.1471–3(f)(5) (for a withholdable payment for chapter 4 purposes). The portion of the payment that can be allocated to specific recipients, as defined in §1.1461–1(c)(1)(ii), shall be reported to each recipient in accordance with the rules of §1.1461–1(c) and §1.1474–1(d)(2) (for a withholdable payment).

(*7*) and (*8*) [Reserved] For further guidance, see §1.1441–1(e)(iv)(D)(*7*) and (*8*).

(E) *Notice procedures*. The IRS may notify a withholding agent that the alternative procedures of paragraph (e)(3)(iv)(D) of this section are not applicable to a specified nonqualified intermediary, a U.S. branch described in paragraph (b)(2)(iv) of this section, or a flow-through entity. If a withholding agent receives such a notice, it must commence withholding under this section or chapter 4 (if applicable) in accordance with the presumption rules of paragraph (b)(3) of this section and §§1.1441–5(d) and (e)(6), 1.6049–5(d), and1.1471–3(f)(5) (for a withholdable payment for chapter 4 purposes) unless the nonqualified intermediary, U.S. branch, or flow-through entity complies with the procedures in paragraphs (e)(3)(iv)(A) through (C) of this section. In addition, the IRS may notify a withholding agent, in appropriate circumstances, that it must apply the presumption rules of paragraph (b)(3) of this section and §§1.1441–5(d) and (e)(6), 1.6049–5(d), and §1.1471–3(f)(5) (for a withholdable payment for chapter 4 purposes) to payments made to a nonqualified intermediary, a U.S. branch, or a flow-through entity even if the nonqualified intermediary, U.S. branch or flow-through entity provides allocation information prior to the payment. A withholding agent that receives a notice under this paragraph (e)(3)(iv)(E) must commence withholding in accordance with the presumption rules within 30 days of the date of the notice. The IRS may withdraw its prohibition against using the alternative procedures of paragraph (e)(3)(iv)(D) of this section, or its requirement to follow the presumption rules, if the nonqualified intermediary, U.S. branch, or flow-through entity can demonstrate to the satisfaction of the IRS that it is capable of complying with the rules under chapter 3 of the Internal Revenue Code and any other conditions required by the IRS.

(v) *Withholding certificate from certain U.S. branches (including territory financial institutions)*. A U.S. branch certificate is a withholding certificate provided by a U.S. branch (including a territory financial institution) described in paragraph (b)(2)(iv) of this section that is not the beneficial owner of the income. The withholding certificate is provided with respect to reportable amounts and must state that such amounts are not effectively connected with the conduct of a trade or business in the United States. The withholding certificate must either transmit the appropriate documentation for the persons for whom the branch receives the payment (*i.e.*, as an intermediary) or be provided as evidence of its agreement with the withholding agent to be treated as a U.S. person with respect to any payment associated with the certificate. A U.S. branch withholding certificate is valid only if it is furnished on a Form W–8, an acceptable substitute form, or such other form as the IRS may prescribe, it is signed under penalties of perjury by a person authorized to sign for the branch, its validity has not expired, and it contains the information, statements, and certifications described in this paragraph (e)(3)(v). If the certificate is furnished to transmit withholding certificates and other documentation, it must contain the information, certifications, and statements

described in paragraphs (e)(3)(v)(A) through (C) of this section and in paragraphs (e)(3)(iii) and (iv) (alternative procedures) of this section, applying the term U.S. branch instead of the term nonqualified intermediary. If the certificate is furnished pursuant to an agreement to treat the U.S. branch or territory financial institution as a U.S. person (which agreement must be for purposes of chapter 4 in addition to this section in the case of a payment that is a withholdable payment), the information and certifications required on the withholding certificate are limited to the following—

(A) The name of the territory financial institution or person of which the U.S. branch is a part, the address of the territory financial institution or U.S. branch, and, for a withholding certificate provided by a U.S. branch, a certification that the person of which the branch is a part is a participating FFI, registered deemed-compliant FFI, or NFFE;

(B) A certification that the payments associated with the certificate are not effectively connected with the conduct of its trade or business in the United States;

(C) The EIN of the U.S. branch or territory financial institution;

(D) When required for chapter 4 purposes, the chapter 4 status and GIIN (if applicable) of the entity of which the U.S. branch is a part; and

(E) Any other information, certifications, or statements as may be required by the form or accompanying instructions in addition to, or in lieu of, the information and certification described in this paragraph (e)(3)(v).

(vi) [Reserved] For further guidance, see §1.1441–1(e)(3)(vi).

(4) *Applicable rules.* The provisions in this paragraph (e)(4) describe procedures applicable to withholding certificates on Form W–8 or Form 8233 (or a substitute form) or documentary evidence furnished to establish foreign status. These provisions do not apply to Forms W–9 (or their substitutes). For corresponding provisions regarding Form W–9 (or a substitute form), see section 3406 and the regulations under that section.

(i) *Who may sign the certificate.* A withholding certificate (including an acceptable substitute) may be signed by any person authorized to sign a declaration under penalties of perjury on behalf of the person whose name is on the certificate as provided in section 6061 and the regulations under that section (relating to who may sign generally for an individual, estate, or trust, which includes certain agents who may sign returns and other documents), section 6062 and the regulations under that section (relating to who may sign corporate returns), and section 6063 and the regulations under that section (relating to who may sign partnership returns). A person authorized to sign a withholding certificate includes an officer or director of a corporation, a partner of a partnership, a trustee of a trust, an executor of an estate, any foreign equivalent of the former titles, and any other person that has been provided written authorization by the individual or entity named on the certificate to sign documentation on such person's behalf.

(ii) Period of validity—(A) *General rule.* Except as provided otherwise in paragraphs (e)(4)(ii)(B) and (C) of this section and this paragraph (e)(4)(ii)(A), a withholding certificate described in paragraph (e)(2)(i) of this section, or a certificate described in §1.871–14(c)(2)(v) (furnished to qualify interest as portfolio interest for purposes of sections 871(h) and 881(c)), will remain valid until the [earlier of the] last day of the third calendar year following the year in which the withholding certificate is signed [or the day that a change in circumstances occurs that makes any information on the certificate incorrect]. For example, a withholding certificate signed on September 30, 2015, remains valid through December 31, 2018, unless circumstances change that make the information on the form no longer correct. Documentary evidence described in §1.1441–6(c)(3) or (4) or §1.6049–5(c)(1) shall remain valid until the last day of the third calendar year following the year in which the documentary evidence is provided to the withholding agent except as provided in paragraph (e)(4)(ii)(B) of this section. Documentary evidence described in §1.6049–5(c)(1) provided to establish a payee's foreign status that

contains an expiration date may, however, be treated as valid until that expiration date if doing so would provide a longer period of validity than the three-year period. Additionally, a withholding certificate or documentary evidence with a period of validity that is valid on December 31, 2013 will not be treated as invalid based solely on the period described in this paragraph (e)(4)(ii) before January 1, 2015. Notwithstanding the validity periods prescribed by this paragraph (e)(4)(ii)(A) and paragraphs (e)(4)(ii)(B) and (C) of this section, a withholding certificate and documentary evidence will cease to be valid if a change in circumstances makes the information on the documentation incorrect.

(B) *Indefinite validity period*. Notwithstanding paragraph (e)(4)(ii)(A) of this section, the following certificates (or parts of certificates) and documentary evidence described in paragraphs (e)(4)(ii)(B)(*1*) through (*11*) of this section shall remain valid until a change in circumstances makes the information on the documentation incorrect under paragraph (e)(4)(ii)(D)(*3*). See, however, §1.1471–3(c)(6)(ii) for when a withholding certificate or documentary evidence remains valid (or is subject to renewal) when also provided with respect to a withholdable payment made to an entity (including an intermediary) for purposes of whether a withholding agent may continue to rely on the entity's claim of chapter 4 status. Additionally, the provisions of paragraphs (e)(4)(ii)(B)(*1*), (*2*), and (*12*) of this section do not apply to documentary evidence or a withholding certificate furnished prior to July 1, 2014. (For documentary evidence or a withholding certificate furnished after December 31, 2000, and before July 1, 2014, see this section as in effect and contained in 26 CFR part 1, as revised April 1, 2013.)

(*1*) A beneficial owner withholding certificate (other than the portion of the certificate making a claim for treaty benefits) and documentary evidence supporting a claim of foreign status when both are provided together by an individual claiming foreign status if the withholding agent does not have a current U.S. residence address or U.S. mailing address for the payee, does not have one or more current U.S. telephone numbers that are the only telephone numbers the withholding agent has for the payee, and, for a payment described in §1.6049–5(c)(1), the withholding agent has not been provided standing instructions to make a payment to an account in the United States for the obligation.

(*2*) A beneficial owner withholding certificate (other than the portion of the certificate making a claim for treaty benefits) described in §1.1471–3(c)(6)(ii)(C)(*2*) and documentary evidence provided by an entity supporting the entity's claim of foreign status when both are provided together.

(*3*) A beneficial owner withholding certificate provided by an entity claiming status as a tax-exempt entity under section 501(c) that is not a foreign private foundation under section 509, provided that the withholding agent reports at least one payment annually to the entity under §1.1461–1(c).

(*4*) A certificate described in paragraph (e)(3)(ii) of this section (a qualified intermediary withholding certificate) but not including the withholding certificates, documentary evidence, statements or other information associated with the certificate.

(*5*) A certificate described in paragraph (e)(3)(iii) of this section (a nonqualified intermediary certificate), but not including the withholding certificates, documentary evidence, statements or other information associated with the certificate.

(*6*) A certificate described in paragraph (e)(3)(v) of this section (a U.S. branch (including a territory financial institution) withholding certificate that is not provided by the beneficial owner), but not including the withholding certificates, documentary evidence, statements or other information associated with the certificate.

(*7*) [Reserved] For further guidance, see §1.1441–1(e)(4)(ii)(B)(*7*).

(*8*) A withholding certificate provided by a withholding foreign trust described in §1.1441–5(e)(5)(v).

(*9*) A certificate described in §1.1441–5(c)(2)(iv) (dealing with a certificate from a person representing to be a withholding foreign partnership).

(*10*) A certificate described in §1.1441–5(c)(3)(iii) (a withholding certificate

from a nonwithholding foreign partnership) but not including the withholding certificates, documentary evidence, statements or other information required to be associated with the certificate.

(*11*) A certificate furnished by a person representing to be an integral part of a foreign government (within the meaning of §1.892–2T(a)(2)) in accordance with §1.1441–8(b), or by a person representing to be a foreign central bank of issue (within the meaning of §1.861–2(b)(4)) or the Bank for International Settlements in accordance with §1.1441–8(c)(1); and

(*12*) Documentary evidence that is not generally renewed or amended (such as a certificate of incorporation).

(C) *Withholding certificate for effectively connected income.* Notwithstanding paragraph (e)(4)(ii)(B) of this section, the period of validity of a withholding certificate furnished to a withholding agent to claim a reduced rate of withholding for income that is effectively connected with the conduct of a trade or business within the United States shall be limited to the three-year period described in paragraph (e)(4)(ii)(A) of this section.

(D) *Change in circumstances—(1) Defined.* A certificate or documentation becomes invalid from the date of a change in circumstances affecting the correctness of the certificate or documentation to the extent provided in this paragraph (e)(4)(ii)(D). For purposes of this section, a person is considered to have a change in circumstances only if such change affects the person's claim of chapter 3 status. Thus, for example, a change of address is not a change in circumstances with respect to a claim of only foreign status under this paragraph (e)(4)(ii)(D) if the change is to another address outside the United States, but is a change in circumstances if the change is to an address in the U.S.

(*2*) *Obligation to notify a withholding agent of a change in circumstances.* If a change in circumstances makes any information on a certificate or other documentary evidence incorrect, then the person whose name is on the certificate or other documentation must inform the withholding agent within 30 days of the change and furnish a new certificate or new documentary evidence. If an intermediary (including a U.S. branch or territory financial institution described in paragraph (b)(2)(iv)(A) of this section) or a flow-through entity becomes aware that a certificate or other appropriate documentation it has furnished to the person from whom it collects a payment is no longer valid because of a change in the circumstances of the person who issued the certificate or furnished the other appropriate documentation, then the intermediary or flow-through entity must notify the person from whom it collects the payment of the change of circumstances within 30 days of the date that it knows or has reason to know of the change in circumstances. It must also obtain a new withholding certificate or new appropriate documentation to replace the existing certificate or documentation the validity of which has expired due to the change in circumstances to continue to treat the person who provided the certificate or documentary evidence under its claimed chapter 3 status.

(*3*) *Withholding agent's obligation with respect to a change in circumstances.* A withholding agent may rely on a certificate without having to inquire into possible changes of circumstances that may affect the validity of the statement, unless it knows or has reason to know that circumstances have changed, as permitted under paragraph (e)(4)(viii) of this section. A withholding agent is required to notify any person providing documentary evidence (in lieu of a withholding certificate) of the person's obligation to notify the withholding agent of a change in circumstances. However, a withholding agent may choose to apply the provisions of paragraph (b)(3)(iv) of this section regarding the 90-day grace period as of that date while awaiting a new certificate or documentation or while seeking information regarding changes, or suspected changes, in the person's circumstances. A withholding agent may also require a new certificate at any time prior to a payment, even though the withholding agent has no actual knowledge or reason to know that any information stated on the certificate has changed.

(iii) *Retention of documentation.* A withholding agent must retain each withholding certificate and other documentation for purposes of this section for as long as it may be relevant to the determination of the withholding agent's tax liability under section 1461 and § 1.1461–1. A withholding agent may retain a withholding certificate or documentary evidence that is an original, certified copy, or a scanned document (as described in paragraph (e)(4)(iv)(C) of this section). A withholding agent may also retain a withholding certificate by other means (such as microfiche) that allows a reproduction of the document provided that the withholding agent has recorded its receipt of a form described in the preceding sentence and is able to produce a hard copy of the form. See § 1.6049–5(c)(1) for the requirements for maintaining documentary evidence that also apply for purposes of determining a payee's U.S. or foreign status for purposes of chapter 3.

(iv) *Electronic transmission of information*—(A) *In general.* A withholding agent may establish a system for a beneficial owner or payee to electronically furnish a Form W–8, an acceptable substitute Form W–8, or such other form as the Internal Revenue Service may prescribe. The system must meet the requirements described in paragraph (e)(4)(iv)(B) of this section. See paragraph (e)(iv)(4)(C) of this section for other cases in which a Form W–8 (or other documentation) may be furnished electronically.

(B) [Reserved] For further guidance, see § 1.1441–1(e)(4)(iv)(B).

(C) *Forms and documentary evidence received by facsimile or email.* A withholding agent may rely upon an otherwise valid Form W–8 (or documentary evidence) received by facsimile or a form or document scanned and received electronically, such as, for example, an image embedded in an email or as a Portable Document Format (.pdf) attached to an email. A withholding agent may not rely on a form or document received by such means, however, if the withholding agent knows that the form or document was transmitted to the withholding agent by a person not authorized to do so by the person required to execute the form. A withholding agent may establish other procedures to authenticate and verify a form or document sent by such means and may reject any form or document that fails to satisfy the requirements of such procedures. Notwithstanding the effective date of this section, the provisions of this paragraph apply for payments made on or after March 6, 2014.

(v) *Additional procedures for certificates provided electronically.* The IRS may prescribe procedures in a revenue procedure (see § 601.601(d)(2) of this chapter) or may issue other appropriate guidance (including a written directive for revenue agents) to further prescribe the conditions by which the IRS will determine that a system developed by a withholding agent to permit beneficial owners and payees to provide Forms W–8 electronically satisfies the requirements of paragraph (e)(4)(iv)(B) of this section.

(vi) *Acceptable substitute form.* A withholding agent may substitute its own form instead of an official Form W–8 or 8233 (or such other official form as the IRS may prescribe). Such a substitute for an official form will be acceptable if it contains provisions that are substantially similar to those of the official form, it contains the same certifications relevant to the transactions as are contained on the official form and these certifications are clearly set forth, and the substitute form includes a signature-under-penalties-of-perjury statement identical to the one stated on the official form. The substitute form is acceptable even if it does not contain all of the provisions contained on the official form, so long as it contains those provisions that are relevant to the transaction for which it is furnished (including those required for purposes of chapter 4). For example, a withholding agent that pays no income for which treaty benefits are claimed may develop a substitute form that is identical to the official form, except that it does not include information regarding claims of benefits under an income tax treaty. Similarly, a withholding agent that is not required to determine the chapter 4 status of a payee providing a form may develop a substitute form that does not contain chapter 4 statuses. A withholding

agent who uses a substitute form must furnish instructions relevant to the substitute form only to the extent and in the manner specified in the instructions to the official form. A withholding agent may use a substitute form that is written in a language other than English and may accept a form that is filled out in a language other than English, but the withholding agent must make available an English translation of the form and its contents to the IRS upon request. A withholding agent may refuse to accept a certificate from a payee or beneficial owner (including the official Form W–8 or 8233) if the certificate provided is not an acceptable substitute form provided by the withholding agent, but only if the withholding agent furnishes the payee or beneficial owner with an acceptable substitute form within 5 business days of receipt of an unacceptable form from the payee or beneficial owner. In that case, the substitute form is acceptable only if it contains a notice that the withholding agent has refused to accept the form submitted by the payee or beneficial owner and that the payee or beneficial owner must submit the acceptable form provided by the withholding agent in order for the payee or beneficial owner to be treated as having furnished the required withholding certificate.

(vii) *Requirement of taxpayer identifying number*. A TIN must be stated on a withholding certificate when required by this paragraph (e)(4)(vii) for the withholding certificate to be valid for purposes of this section. A TIN is required to be stated on—

(A) A withholding certificate on which a beneficial owner is claiming the benefit of a reduced rate under an income tax treaty (other than for amounts described in §1.1441–6(c)(2) or amounts for which a foreign tax identifying number has been provided, as described in §1.1441–6(c)(2));

(B) through (E) [Reserved] For further guidance, see §1.1441–1(e)(4)(vii)(B) through (E).

(F) A withholding certificate from a person representing to be a withholding foreign partnership or a withholding foreign trust;

(G) [Reserved] For further guidance, see §1.1441–1(e)(4)(vii)(G).

(H) A withholding certificate from a person representing to be a U.S. branch or territory financial institution described in paragraph (b)(2)(iv) of this section; and

(I) A withholding certificate provided by an entity acting as a qualified securities lender, as defined for purposes of chapter 3, with respect to a substitute dividend paid in a securities lending or similar transaction.

(viii) [Reserved] For further guidance, see §1.1441–1(e)(4)(viii) introductory text and (e)(4)(viii)(A).

(B) *Status of payee as an intermediary or as a person acting for its own account*. A withholding agent may rely on the type of certificate furnished as indicative of the payee's status as an intermediary or as an owner, unless the withholding agent has actual knowledge or reason to know otherwise. For example, a withholding agent that receives a beneficial owner withholding certificate from a foreign financial institution may treat the institution as the beneficial owner, unless it has information in its records that would indicate otherwise or the certificate contains information that is not consistent with beneficial owner status (e.g., sub-account numbers that do not correspond to accounts maintained by the withholding agent for such person or names of one or more persons other than the person submitting the withholding certificate). If the financial institution also acts as an intermediary, the withholding agent may request that the institution furnish two certificates, *i.e.*, a beneficial owner certificate described in paragraph (e)(2)(i) of this section for the amounts that it receives as a beneficial owner, and an intermediary withholding certificate described in paragraph (e)(3)(i) of this section for the amounts that it receives as an intermediary. In the absence of reliable representation or information regarding the status of the payee as an owner or as an intermediary, see paragraph (b)(3)(v)(A) for applicable presumptions.

(C) *Reliance on a prior version of a withholding certificate*. Upon the issuance by the IRS of an updated version of a withholding certificate, a

withholding agent may continue to accept the prior version of the withholding certificate for six months after the revision date shown on the updated withholding certificate, unless the IRS has issued guidance that indicates otherwise, and may continue to rely upon a previously signed prior version of the withholding certificate until its period of validity expires.

(ix) *Certificates to be furnished to withholding agent for each obligation unless exception applies.* Unless otherwise provided in paragraphs (e)(4)(ix)(A) through (D) of this section, a withholding agent that is a financial institution with which a customer may open an account shall obtain a withholding certificate or documentary evidence on an obligation-by-obligation basis and may not rely upon such documentation collected by another person or another branch of the withholding agent.

(A) *Exception for certain branch or account systems or system maintained by agent.* A withholding agent may rely on a withholding certificate or documentary evidence furnished by a customer as part of a single branch system, universal account system, or shared account system described in §1.1471–3(c)(8) (substituting the term chapter 3 status for chapter 4 status each place it appears in that paragraph). Furthermore, a withholding agent may rely on a shared documentation system maintained by an agent as described in §1.1471–3(c)(9)(i) (also substituting the term chapter 3 status for chapter 4 status each place it appears in that paragraph).

(B) *Reliance on certification provided by introducing brokers—(1) In general.* A withholding agent may rely on the certification of a broker indicating the broker's determination of a payee's chapter 3 status and that the broker holds a valid beneficial owner withholding certificate described in paragraph (e)(2)(i) of this section or other appropriate documentation for that beneficial owner with respect to any readily tradable instrument, as defined in §31.3406(h)–1(d) of this chapter, if the broker is a United States person (including a U.S. branch treated as a U.S. person under paragraph (b)(2)(iv) of this section) that is acting as the agent of a beneficial owner. A withholding agent may also rely on a certification described in the preceding sentence that is provided by a qualified intermediary that makes payments to beneficial owners that it receives from the withholding agent. The certification must be in writing or in electronic form and contain all of the information required of a nonqualified intermediary under paragraphs (e)(3)(iv)(B) and (C) of this section. If a broker chooses to use this paragraph (e)(4)(ix)(B), that broker will be solely responsible for applying the rules of §1.1441–7(b) to the withholding certificates or other appropriate documentation and shall be liable for any underwithholding as a result of the broker's failure to apply such rules. See §1.1471–3(c)(9)(iii) for a similar allowance that applies to a broker's determination of a payee's chapter 4 status for purposes of chapter 4. For purposes of this paragraph (e)(4)(ix)(B), the term *broker* means a person treated as a broker under §1.6045–1(a).

(*2*) *Example.* The following example illustrates the rules of this paragraph (e)(4)(x)(B) with respect to a U.S. broker:

Example. SCO is a U.S. securities clearing organization that provides clearing services for correspondent broker, CB, a U.S. corporation. Pursuant to a fully disclosed clearing agreement, CB fully discloses the identity of each of its customers to SCO. Part of SCO's clearing duties include the crediting of income and gross proceeds of readily tradable instruments (as defined in §31.3406(h)–1(d)) to each customer's account. For each disclosed customer that is a foreign beneficial owner, CB provides SCO with information required under paragraphs (e)(3)(iv)(B) and (C) of this section that is necessary to apply the correct rate of withholding and to file Forms 1042–S. SCO may use the representations and beneficial owner information provided by CB to determine the proper amount of withholding and to file Forms 1042–S. CB is responsible for determining the validity of the withholding certificates or other appropriate documentation under §1.1441–1(b).

(C) *Reliance on documentation and certifications provided between principals and agents—(1) Withholding agent as agent.* A withholding agent that acts on behalf of a principal may rely upon documentation (or copies of documentation) obtained from the principal, and, with respect to a principal

that is a U.S. withholding agent, a qualified intermediary (when acting as such for determining a payee's status), or a withholding foreign partnership or withholding foreign trust with respect to a partner, owner, or beneficiary in the partnership or trust, the withholding agent may rely upon certification provided by the principal for purposes of determining a payee's chapter 3 status. Thus an agent (such as a paying agent or transfer agent) may not rely upon a certification provided by a principal that is a participating FFI but is not also a qualified intermediary, withholding foreign partnership, or withholding foreign trust for purposes of this section, even though it may rely on the certification when provided solely for purposes of chapter 4 under § 1.1471–3(c)(9)(iv).

(*2*) *Withholding agent as principal.* A withholding agent may also rely on documentation collected by an agent of the withholding agent in order to fulfill its chapter 3 obligations because such agent's actions are imputed to the principal (the withholding agent). For example, a withholding agent may contract an agent to collect Forms W–8 from account holders, but the withholding agent remains liable for any tax liability resulting from a failure of the agent to comply with the requirements of chapter 3.

(D) *Reliance upon documentation for accounts acquired in merger or bulk acquisition for value.* A withholding agent that acquires an account from a predecessor or transferor in a merger or bulk acquisition of accounts for value is permitted to rely upon valid documentation (or copies of valid documentation) collected by the predecessor or transferor for determining the chapter 3 status of an account holder of such an account. In addition, a withholding agent that acquires an account in a merger or bulk acquisition of accounts for value, other than a related party transaction, from a U.S. withholding agent (or a qualified intermediary when the withholding agent is also a qualified intermediary) may also rely upon the predecessor's or transferor's determination of the account holder's chapter 3 status for a transition period of the lesser of six months from the date of the merger or until the acquirer knows that the claim of entity classification and status is inaccurate or a change in circumstances occurs with respect to the account. At the end of the transition period, the acquirer will be permitted to rely upon the predecessor's determination as to the chapter 3 status of the account holder only if the documentation that the acquirer has for the account holder, including documentation obtained from the predecessor or transferor, supports the status claimed. An acquirer that discovers at the end of the transition period that the chapter 3 status assigned by the predecessor or transferor to the account holder was incorrect and has not withheld as it would have been required to but for its reliance upon the predecessor's determination, will be required to withhold on future payments, if any, made to the account holder the amount of tax that should have been withheld during the transition period but for the erroneous classification as to the account holder's status. For purposes of this paragraph (e)(4)(ix)(D), a related party transaction is a merger or sale of accounts in which the acquirer is in the same expanded affiliated group, within the meaning of § 1.1471–5(i)(2), as the predecessor or transferor either prior to or after the merger or acquisition or the predecessor or transferor (or shareholders of the predecessor or transferor) obtain a controlling interest in the acquirer or in a newly formed entity created for purposes of the merger or acquisition. See § 1.1471–3(c)(v) for a similar reliance rule that applies for purposes of chapter 4. Notwithstanding the effective date of this section, the provisions of this paragraph apply for payments made on or after March 6, 2014.

(5) *Qualified intermediaries*—(i) *General rule.* A qualified intermediary, as defined in paragraph (e)(5)(ii) of this section, may furnish a qualified intermediary withholding certificate to a withholding agent. The withholding certificate provides certifications on behalf of other persons for the purpose of claiming and verifying reduced rates of withholding under section 1441 or 1442 and for the purpose of reporting and withholding under other provisions of the Internal Revenue Code, such as the provisions under chapters 4 and 61

and section 3406 (and the regulations under those provisions). Furnishing such a certificate is in lieu of transmitting to a withholding agent withholding certificates or other appropriate documentation for the persons for whom the qualified intermediary receives the payment, including interest holders in a qualified intermediary that is fiscally transparent under the regulations under section 894. Although the qualified intermediary is required to obtain withholding certificates or other appropriate documentation from beneficial owners, payees, or interest holders pursuant to its agreement with the IRS, it is generally not required to attach such documentation to the intermediary withholding certificate. Notwithstanding the preceding sentence a qualified intermediary must provide a withholding agent with the Forms W–9, or disclose the names, addresses, and taxpayer identifying numbers, if known, of those U.S. non-exempt recipients for whom the qualified intermediary receives reportable amounts (within the meaning of paragraph (e)(3)(vi) of this section) to the extent required in the qualified intermediary's agreement with the IRS and except as otherwise provided in paragraph (e)(5)(v)(C)(*1*) of this section.

(ii) *Definition of qualified intermediary*. With respect to a payment to a foreign person, the term qualified intermediary means a person that is a party to a withholding agreement with the IRS and such person is—

(A) A foreign financial institution that is a participating FFI (including a reporting Model 2 FFI), a registered deemed-compliant FFI (including a reporting Model 1 FFI), an FFI treated as a deemed-compliant FFI under an applicable IGA that is subject to due diligence and reporting requirements with respect to its U.S. accounts similar to those applicable to a registered deemed-compliant FFI under §1.1471–5(f)(1), excluding a U.S. branch of any of the foregoing entities, or any other category of FFI identified in a qualified intermediary agreement as eligible to act as a qualified intermediary;

(B) A foreign branch or office of a U.S. financial institution or a foreign branch or office of a U.S. clearing organization that is either a reporting Model 1 FFI or agrees to the reporting requirements applicable to a participating FFI with respect to its U.S. accounts;

(C) A foreign corporation for purposes of presenting claims of benefits under an income tax treaty on behalf of its shareholders to the extent permitted to act as a qualified intermediary by the IRS; or

(D) Any other person acceptable to the IRS.

(iii) *Withholding agreement*—(A) *In general*. The IRS may, upon request, enter into a withholding agreement with a foreign person described in paragraph (e)(5)(ii) of this section pursuant to such procedures as the IRS may prescribe in published guidance (see §601.601(d)(2) of this chapter). Under the withholding agreement, a qualified intermediary shall generally be subject to the applicable withholding and reporting provisions applicable to withholding agents and payors under chapters 3, 4, and 61 of the Internal Revenue Code, section 3406, the regulations under those provisions, and other withholding provisions of the Internal Revenue Code, except to the extent provided under the agreement.

(B) *Terms of the withholding agreement*. The agreement shall specify the obligations of the qualified intermediary under chapters 3 and 4 and, for a qualified intermediary that is an FFI, require the qualified intermediary to satisfy the documentation, withholding, and reporting obligations required of a participating FFI or registered deemed-compliant FFI (including a reporting Model 1 FFI as defined in §1.1471–1(b)(114)) with respect to each branch of the qualified intermediary other than a U.S. branch that is treated as a U.S. person under paragraph (b)(2)(iv)(A) of this section. The agreement will specify the type of certifications and documentation upon which the qualified intermediary may rely to ascertain the classification (e.g., corporation or partnership), status (*i.e.*, U.S. or foreign and chapter 4 status) of beneficial owners and payees who receive reportable amounts and reportable payments collected by the qualified intermediary for purposes of chapters 3 and 61, section 3406, and, if necessary, entitlement to the benefits of a

reduced rate under an income tax treaty. The agreement shall specify if, and to what extent, the qualified intermediary may assume primary withholding responsibility in accordance with paragraph (e)(5)(iv) of this section. It shall also specify the extent to which applicable return filing and information reporting requirements are modified so that, in appropriate cases, the qualified intermediary may report payments to the IRS on an aggregated basis, without having to disclose the identity of beneficial owners and payees. However, the qualified intermediary may be required to provide to the IRS the name and address of those foreign customers who benefit from a reduced rate under an income tax treaty pursuant to the qualified intermediary arrangement for purposes of verifying entitlement to such benefits, particularly under an applicable limitation on benefits provision. Under the agreement, a qualified intermediary may agree to act as an acceptance agent to perform the duties described in §301.6109–1(d)(3)(iv)(A) of this chapter. The agreement may specify the manner in which applicable procedures for adjustments for underwithholding and overwithholding, including refund procedures, apply in the context of a qualified intermediary arrangement and the extent to which applicable procedures may be modified. In particular, a withholding agreement may allow a qualified intermediary to claim refunds of overwithheld amounts. The agreement shall specify the manner in which the qualified intermediary may deal with payments to other intermediaries and flow-through entities and the obligations of a qualified intermediary that acts as a qualified securities lender with respect to payments of substitute dividends under chapters 3 and 4. In addition, the agreement shall specify the manner in which the IRS will verify compliance with the agreement, including the time and manner for which a qualified intermediary will be required to certify to the IRS regarding its compliance with the agreement (including its performance of a periodic review) and the types of information required to be disclosed as part of the certification. In appropriate cases, the IRS may require review procedures be performed by an approved auditor (in addition to those performed as part of the periodic review) and may conduct a review of the auditor's findings. The agreement may include provisions for the assessment and collection of tax in the event that failure to comply with the terms of the agreement results in the failure by the withholding agent or the qualified intermediary to withhold and deposit the required amount of tax. Further, the agreement may specify the procedures by which amounts withheld are to be deposited, if different from the deposit procedures under the Internal Revenue Code and applicable regulations. To determine whether to enter a qualified intermediary withholding agreement and the terms of any particular withholding agreement, the IRS will consider the type of local know-your-customer laws and practices to which the entity is subject, as well as the extent and nature of supervisory and regulatory control exercised under the laws of the foreign country over the foreign entity.

(iv) *Assignment of primary withholding responsibility*. Any person who meets the definition of a withholding agent under §1.1441–7(a) (for payments subject to chapter 3 withholding) and §1.1473–1(d) (for withholdable payments) (whether a U.S. person or a foreign person) is required to withhold and deposit any amount withheld under §§1.1461–1(a) and 1.1474–1(b) and to make the returns prescribed by §§1.1461–1(b) and (c), and by 1.1474–1(c), and (d). Under its qualified intermediary agreement, a qualified intermediary may, however, inform a withholding agent from which it receives a payment that it will assume the primary obligation to withhold, deposit, and report amounts under chapters 3 and 4 of the Internal Revenue Code and/or under chapter 61 of the Internal Revenue Code and section 3406. For assuming withholding obligations as described in the previous sentence, a qualified intermediary that assumes primary withholding responsibility for payments made to an account under chapter 3 is also required to assume primary withholding responsibility under chapter 4 for payments made to

the account that are withholdable payments. Additionally, a qualified intermediary may represent that it assumes chapter 61 reporting and section 3406 obligations for a payment when the qualified intermediary meets the requirements to have provided a chapter 4 withholding rate pool of U.S. payees with respect to the payment under § 1.6049–4(c)(4)(iii) had the qualified intermediary not assumed these obligations. If a withholding agent makes a payment of an amount subject to withholding under chapter 3, a reportable payment (as defined in section 3406(b)), or a withholdable payment to a qualified intermediary that represents to the withholding agent that it has assumed primary withholding responsibility for the payment, the withholding agent is not required to withhold on the payment. The withholding agent is not required to determine that the qualified intermediary actually performs its primary withholding responsibilities. A qualified intermediary that assumes primary withholding responsibility under chapters 3 and 4 or primary reporting and backup withholding responsibility under chapter 61 and section 3406 is not required to assume primary withholding responsibility for all accounts it has with a withholding agent but must assume primary withholding responsibility for all payments made to any one account that it has with the withholding agent.

(v) *Withholding statement*—(A) *In general.* A qualified intermediary must provide each withholding agent from which it receives reportable amounts as a qualified intermediary with a written statement (the withholding statement) containing the information specified in paragraph (e)(5)(v)(B) of this section. A withholding statement is not required, however, if all of the information a withholding agent needs to fulfill its withholding and reporting requirements is contained in the withholding certificate. The qualified intermediary agreement will require the qualified intermediary to include information in its withholding statement relating to withholdable payments for purposes of withholding under chapter 4 as described in paragraph (e)(5)(v)(C)(*2*) of this section. The withholding statement forms an integral part of the qualified intermediary's qualified intermediary withholding certificate and the penalties of perjury statement provided on the withholding certificate shall apply to the withholding statement as well. The withholding statement may be provided in any manner, and in any form, to which qualified intermediary and the withholding agent mutually agree, including electronically. If the withholding statement is provided electronically, the statement must satisfy the requirements described in paragraph (e)(3)(iv) of this section (applicable to a withholding statement provided by a nonqualified intermediary). The withholding statement shall be updated as often as necessary for the withholding agent to meet its reporting and withholding obligations under chapters 3, 4, and 61 and section 3406. For purposes of this section, a withholding agent will be liable for tax, interest, and penalties in accordance with paragraph (b)(7) of this section to the extent it does not follow the presumption rules of paragraph (b)(3) of this section, §§ 1.1441–5(d) and (e)(6), and 1.6049–5(d) for a payment, or portion thereof, for which it does not have a valid withholding statement prior to making a payment.

(B) *Content of withholding statement.* The withholding statement must contain sufficient information for a withholding agent to apply the correct rate of withholding on payments from the accounts identified on the statement and to properly report such payments on Forms 1042–S and Forms 1099, as applicable. The withholding statement must—

(*1*) Designate those accounts for which the qualified intermediary acts as a qualified intermediary;

(*2*) Designate those accounts for which qualified intermediary assumes primary withholding responsibility under chapter 3 and chapter 4 of the Code and/or primary reporting and backup withholding responsibility under chapter 61 and section 3406;

(*3*) If applicable, designate those accounts for which the qualified intermediary is acting as a qualified securities lender with respect to a substitute dividend paid in a securities lending or similar transaction; and

(*4*) Provide information regarding withholding rate pools, as described in paragraph (e)(5)(v)(C) of this section.

(C) *Withholding rate pools*—(*1*) *In general.* Except to the extent it has assumed both primary withholding responsibility under chapters 3 and 4 of the Internal Revenue Code and primary reporting and backup withholding responsibility under chapter 61 and section 3406 with respect to a payment, a qualified intermediary shall provide as part of its withholding statement the chapter 3 withholding rate pool information that is required for the withholding agent to meet its withholding and reporting obligations under chapters 3 and 61 of the Internal Revenue Code and section 3406. See, however, paragraph (e)(5)(v)(C)(*2*) of this section for when a qualified intermediary may provide a chapter 4 withholding rate pool (as described in paragraph (c)(48) of this section) with respect to a payment that is a withholdable payment. A chapter 3 withholding rate pool is a payment of a single type of income, determined in accordance with the categories of income reported on Form 1042–S, that is subject to a single rate of withholding paid to a payee that is a foreign person and for which withholding under chapter 4 does not apply. A chapter 3 withholding rate pool may be established by any reasonable method on which the qualified intermediary and a withholding agent agree (*e.g.*, by establishing a separate account for a single chapter 3 withholding rate pool, or by dividing a payment made to a single account into portions allocable to each chapter 3 withholding rate pool). A qualified intermediary may include a separate pool for account holders that are U.S. exempt recipients or may include such accounts in a chapter 3 withholding rate pool to which withholding does not apply. The withholding statement must identify the chapter 4 exemption code (as provided in the instructions to Form 1042–S) applicable to the chapter 3 withholding rate pools contained on the withholding statement. To the extent a qualified intermediary does not assume primary reporting and backup withholding responsibility under chapter 61 and section 3406, a qualified intermediary's withholding statement must establish a separate withholding rate pool for each U.S. non-exempt recipient account holder that the qualified intermediary has disclosed to the withholding agent unless the qualified intermediary uses the alternative procedures in paragraph (e)(5)(v)(C)(*3*) of this section or the account holder is a payee that the qualified intermediary is permitted to include in a chapter 4 withholding rate pool of U.S. payees. A qualified intermediary that is a participating FFI or registered deemed-compliant FFI may include a chapter 4 withholding rate pool of U.S. payees on a withholding statement by applying the rules under paragraph (e)(3)(iv)(A) of this section (by substituting ''qualified intermediary'' for ''nonqualified intermediary'') with respect to an account that it maintains (as described in §1.1471–5(b)(5)) for the payee of the payment. A qualified intermediary shall determine withholding rate pools based on valid documentation that it obtains under its withholding agreement with the IRS, or if a payment cannot be reliably associated with valid documentation, under the applicable presumption rules. If a qualified intermediary has an account holder that is another intermediary (whether a qualified intermediary or a nonqualified intermediary) or a flow-through entity, the qualified intermediary may combine the account holder information provided by the other intermediary or flow-through entity with the qualified intermediary's direct account holder information to determine the qualified intermediary's chapter 3 withholding rate pools and each of the qualified intermediary's chapter 4 withholding rate pools to the extent provided in the agreement described in (e)(5)(iii) of this section.

(*2*) *Withholding rate pool requirements for a withholdable payment.* This paragraph (e)(5)(v)(C)(*2*) modifies the requirements of a withholding statement described in paragraph (e)(5)(v)(C)(*1*) provided by a qualified intermediary with respect to a withholdable payment (including a reportable amount that is a withholdable payment). For such a payment, the regulations applicable to a withholding statement described in paragraph (e)(5)(v)(C)(*1*) of this section shall apply, except that—

(*i*) If the qualified intermediary provides a withholding statement described in §1.1471–3(c)(3)(iii)(B)(*2*) (describing an FFI withholding statement), the withholding statement may include a chapter 4 withholding rate pool with respect to the portion of the payment allocated to a single pool of recalcitrant account holders (without the need to subdivide into the pools described in §1.1471–4(d)(6)), including both account holders of the qualified intermediary and of any participating FFI, registered deemed-compliant FFI, or other qualified intermediary for whom the first-mentioned qualified intermediary receives the payment, and nonparticipating FFIs (to the extent permitted) in lieu of reporting chapter 3 withholding rate pools with respect to such persons as described in paragraph (e)(5)(v)(C)(*1*) of this section); or

(*ii*) If the qualified intermediary provides a withholding statement described in §1.1471–3(c)(3)(iii)(B)(*3*) (describing a chapter 4 withholding statement), the withholding statement may include a chapter 4 withholding rate pool with respect to the portion of the payment allocated to nonparticipating FFIs.

(*3*) *Alternative procedure for U.S. non-exempt recipients*. If permitted under its agreement with the IRS, a qualified intermediary may, by mutual agreement with a withholding agent, establish a single zero withholding rate pool that includes U.S. non-exempt recipient account holders for whom the qualified intermediary has provided Forms W–9 prior to the withholding agent paying any reportable payments, as defined in the qualified intermediary agreement, and a separate withholding rate pool (subject to 28-percent withholding, or other applicable statutory back-up withholding tax rate) that includes only U.S. non-exempt recipient account holders for whom a qualified intermediary has not provided Forms W–9 prior to the withholding agent paying any reportable payments. If a qualified intermediary chooses the alternative procedure of this paragraph (e)(5)(v)(C)(3), the qualified intermediary must provide the information required by its qualified intermediary agreement to the withholding agent no later than January 15 of the year following the year in which the payments are paid. Failure to provide such information will result in the application of penalties to the qualified intermediary under sections 6721 and 6722, as well as any other applicable penalties, and may result in the termination of the qualified intermediary's withholding agreement with the IRS. A withholding agent shall not be liable for tax, interest, or penalties for failure to backup withhold or report information under chapter 61 of the Internal Revenue Code due solely to the errors or omissions of the qualified intermediary. If a qualified intermediary fails to provide the allocation information required by this paragraph (e)(5)(v)(C)(*3*), with respect to U.S. non-exempt recipients, the withholding agent shall report the unallocated amount paid from the withholding rate pool to an unknown recipient, or otherwise in accordance with the appropriate Form 1099 and the instructions accompanying the form.

(D) *Example*. The following example illustrates the application of paragraph (e)(5)(v)(C) for a qualified intermediary providing chapter 4 withholding rate pools on an FFI withholding statement provided to a withholding agent. WA makes a payment of U.S. source interest that is a withholdable payment to QI, a qualified intermediary that is an FFI and a non-U.S. payor (as defined in §1.6049–5(c)(5)), and A and B are account holders of QI (as defined under §1.1471–5(a)) and are both U.S. non-exempt recipients (as defined paragraph (c)(21) of this section). Ten percent of the payment is attributable to both A and B. A has provided WA with a Form W–9, but B has not provided WA with a Form W–9. QI assumes primary withholding responsibility under chapters 3 and 4 with respect to the payment, 80-percent of which is allocable to foreign payees who are account holders other than A and B. As a participating FFI, QI is required to report with respect to its U.S. accounts under §1.1471–4(d) (as incorporated into the agreement described in paragraph (e)(5)(iii) of this section). Provided that QI reports A's account as a U.S. account under the requirements referenced in the preceding sentence, QI is not required to provide

WA with a Form W–9 from A and may instead include A in a chapter 4 withholding rate pool of U.S. payees, allocating 10% of the payment to this pool. See §1.6049–4(c)(4)(iii) concerning when reporting under section 6049 for a payment of interest is not required when an FFI that is a non-U.S. payor reports an account holder receiving the payment under its chapter 4 requirements. With respect to B, the interest payment is subject to backup withholding under section 3406. Because B is a recalcitrant account holder of QI for withholdable payments and because QI assumes primary chapter 4 withholding responsibility, however, QI may include the portion of the payment allocated to B with the remaining 80% of the payment for which QI assumes primary withholding responsibility. WA can reliably associate the full amount of the payment based on the withholding statement and does so regardless of whether WA knows B is a U.S. non-exempt recipient that is receiving a portion of the payment. See §31.3406(g)–1(e) (providing exemption to backup withholding when withholding was applied under chapter 4).

(f) [Reserved] For further guidance, see §1.1441–1(f)(1) and (2).

(3) *Effective/applicability date.* This section applies to payments made after June 30, 2014. (For payments made after December 31, 2000, and before July 1, 2014, see this section as in effect and contained in 26 CFR part 1, as revised April 1, 2013.)

(g) *Expiration date.* The applicability of this section expires on February 28, 2017.

[T.D. 9658, 79 FR 12747, Mar. 6, 2014; 79 FR 37182, July 1, 2014]

§1.1441–2 Amounts subject to withholding.

(a) *In general.* For purposes of the regulations under chapter 3 of the Internal Revenue Code, the term *amounts subject to withholding* means amounts from sources within the United States that constitute either fixed or determinable annual or periodical income described in paragraph (b) of this section or other amounts subject to withholding described in paragraph (c) of this section. For purposes of this paragraph (a), an amount shall be treated as being from sources within the United States if the source of the amount cannot be determined at the time of payment. See §1.1441–3(d)(1) for determining the amount to be withheld from a payment in the absence of information at the time of payment regarding the source of the amount. Amounts subject to withholding include amounts that are not fixed or determinable annual or periodical income and upon which withholding is specifically required under a provision of this section or another section of the regulations under chapter 3 of the Internal Revenue Code (such as corporate distributions upon which withholding is required under §1.1441–3(c)(1) that do not constitute dividend income). Amounts subject to withholding do not include—

(1) Amounts described in §1.1441–1(b)(4)(i) to the extent they involve interest on obligations in bearer form or on foreign-targeted registered obligations (but, in the case of a foreign-targeted registered obligation, only to the extent of those amounts paid to a registered owner that is a financial institution within the meaning of section 871(h)(5)(B) or a member of a clearing organization which member is the beneficial owner of the obligation);

(2) Amounts described in §1.1441–1(b)(4)(ii) (dealing with bank deposit interest and similar types of interest (including original issue discount) described in section 871(i)(2)(A) or 881(d));

(3) Amounts described in §1.1441–1(b)(4)(iv) (dealing with interest or original issue discount on certain short-term obligations described in section 871(g)(1)(B) or 881(e));

(4) Amounts described in §1.1441–1(b)(4)(xx) (dealing with income from certain gambling winnings exempt from tax under section 871(j));

(5) Amounts paid as part of the purchase price of an obligation sold or exchanged between interest payment dates, unless the sale or exchange is part of a plan the principal purpose of which is to avoid tax and the withholding agent has actual knowledge or reason to know of such plan;

(6) Original issue discount paid as part of the purchase price of an obligation sold or exchanged in a transaction

other than a redemption of such obligation, unless the purchase is part of a plan the principal purpose of which is to avoid tax and the withholding agent has actual knowledge or reason to know of such plan; and

(7) Insurance premiums paid with respect to a contract that is subject to the section 4371 excise tax.

(b) *Fixed or determinable annual or periodical income*—(1) *In general*—(i) *Definition*. For purposes of chapter 3 of the Internal Revenue Code and the regulations thereunder, fixed or determinable annual or periodical income includes all income included in gross income under section 61 (including original issue discount) except for the items specified in paragraph (b)(2) of this section. Items of income that are excluded from gross income under a provision of law without regard to the U.S. or foreign status of the owner of the income, such as interest excluded from gross income under section 103(a) or qualified scholarship income under section 117, shall not be treated as fixed or determinable annual or periodical income under chapter 3 of the Internal Revenue Code. Income excluded from gross income under section 892 (income of foreign governments) or section 115 (income of a U.S. possession) is fixed or determinable annual or periodical income since the exclusion from gross income under those sections is dependent on the foreign status of the owner of the income. See §1.306–3(h) for treating income from the disposition of section 306 stock as fixed or determinable annual or periodical income.

(ii) *Manner of payment*. The term *fixed or determinable annual or periodical* is merely descriptive of the character of a class of income. If an item of income falls within the class of income contemplated in the statute and described in paragraph (a) of this section, it is immaterial whether payment of that item is made in a series of payments or in a single lump sum. Further, the income need not be paid annually if it is paid periodically; that is to say, from time to time, whether or not at regular intervals. The fact that a payment is not made annually or periodically does not, however, prevent it from being fixed or determinable annual or periodical income (e.g., a lump sum payment). In addition, the fact that the length of time during which the payments are to be made may be increased or diminished in accordance with someone's will or with the happening of an event does not disqualify the payment as determinable or periodical. For this purpose, the share of the fixed or determinable annual or periodical income of an estate or trust from sources within the United States which is required to be distributed currently, or which has been paid or credited during the taxable year, to a nonresident alien beneficiary of such estate or trust constitutes fixed or determinable annual or periodical income.

(iii) *Determinability of amount*. An item of income is fixed when it is to be paid in amounts definitely pre-determined. An item of income is determinable if the amount to be paid is not known but there is a basis of calculation by which the amount may be ascertained at a later time. For example, interest is determinable even if it is contingent in that its amount cannot be determined at the time of payment of an amount with respect to a loan because the calculation of the interest portion of the payment is contingent upon factors that are not fixed at the time of the payment. For purposes of this section, an amount of income does not have to be determined at the time that the payment is made in order to be determinable. An amount of income described in paragraph (a) of this section which the withholding agent knows is part of a payment it makes but which it cannot calculate exactly at the time of payment, is nevertheless determinable if the determination of the exact amount depends upon events expected to occur at a future date. In contrast, a payment which may be income in the future based upon events that are not anticipated at the time the payment is made is not determinable. For example, loan proceeds may become income to the borrower when and to the extent the loan is canceled without repayment. While the cancellation of the debt is income to the borrower when it occurs, it is not determinable at the time the loan proceeds are disbursed to the borrower if the lack of repayment leading to the cancellation of part or all of the

debt was not anticipated at the time of disbursement. The fact that the source of an item of income cannot be determined at the time that the payment is made does not render a payment not determinable. See § 1.1441–3(d)(1) for determining the amount to be withheld from a payment in the absence of information at the time of payment regarding the source of the amount.

(2) *Exceptions.* For purposes of chapter 3 of the Code and the regulations thereunder, the items of income described in this paragraph (b)(2) are not fixed or determinable annual or periodical income—

(i) Gains derived from the sale of property (including market discount and option premiums), except for gains described in paragraph (b)(3) or (c) of this section; and

(ii) Any other income that the Internal Revenue Service (IRS) may determine, in published guidance (see § 601.601(d)(2) of this chapter), is not fixed or determinable annual or periodical income.

(3) *Original issue discount*—(i) *Amount subject to tax.* An amount representing original issue discount is fixed or determinable annual or periodical income that is subject to tax under sections 871(a)(1)(C) and 881(a)(3) to the extent provided in those sections and this paragraph (b)(3) if not otherwise excluded under paragraph (a) of this section. An amount of original issue discount is subject to tax with respect to a foreign beneficial owner of an obligation carrying original issue discount upon a sale or exchange of the obligation or when a payment is made on such obligation. The amount taxable is the amount of original issue discount that accrued while the foreign person held the obligation up to the time that the obligation is sold or exchanged or that a payment is made on the obligation, reduced by any amount of original issue discount that was taken into account prior to that time (due to a payment made on the obligation). In the case of a payment made on the obligation, the tax due on the amount of original issue discount may not exceed the amount of the payment reduced by the tax imposed on any portion of the payment that is qualified stated interest.

(ii) *Amounts subject to withholding.* A withholding agent must withhold on the taxable amount of original issue discount paid on the redemption of an original issue discount obligation unless an exception to withholding applies (e.g., portfolio interest or treaty exception). In addition, withholding is required on the taxable amount of original issue discount upon the sale or exchange of an original issue discount obligation, other than in a redemption, to the extent the withholding agent has actual knowledge or reason to know that the sale or exchange is part of a plan the principal purpose of which is to avoid tax. If a withholding agent cannot determine the taxable amount of original issue discount on the redemption of an original issue discount obligation (or on the sale or exchange of such an obligation if the principal purpose of the sale is to avoid tax), then it must withhold on the entire amount of original issue discount accrued from the date of issue until the date of redemption (or the date the obligation is sold or exchanged) determined on the basis of the most recently published ''List of Original Issue Discount Instruments'' (IRS Publication 1212, available from the IRS Forms Distribution Center) or similar list published by the IRS as if the beneficial owner of the obligation had held the obligation since its original issue.

(iii) *Exceptions to withholding.* To the extent that this paragraph (b)(3) applies to require withholding by a person other than an issuer of an original issue discount obligation, or the issuer's agent, it shall apply only to obligations issued after December 31, 2000.

(4) *Securities lending transactions and equivalent transactions.* See §§ 1.871–7(b)(2) and 1.881–2(b)(2) regarding the character of substitute payments as fixed and determinable annual or periodical income. Such amounts constitute income subject to withholding to the extent they are from sources within the United States, as determined under section §§ 1.861–2(a)(7) and 1.861–3(a)(6). See §§ 1.6042–3(a)(2) and 1.6049–5(a)(5) for reporting requirements applicable to substitute dividend and interest payments, respectively.

(5) *REMIC residual interests.* Amounts subject to withholding include an excess inclusion described in § 1.860G–3(b)(2) and the portion of an amount described in § 1.860G–3(b)(1) that is an excess inclusion.

(6) *Dividend equivalents.* Amounts subject to withholding include a dividend equivalent described in section 871(m) and the regulations thereunder. For this purpose, the amount of a dividend equivalent includes any gross amount that is used in computing any net amount that is transferred to or from the taxpayer under the terms of the transaction or any other payment described in section 871(m) and the regulations thereunder.

(c) *Other income subject to withholding.* Withholding is also required on the following items of income—

(1) Gains described in sections 631 (b) or (c), relating to treatment of gain on disposal of timber, coal, or domestic iron ore with a retained economic interest; and

(2) Gains subject to the 30-percent tax under section 871(a)(1)(D) or 881(a)(4), relating to contingent payments received from the sale or exchange of patents, copyrights, and similar intangible property.

(d) *Exceptions to withholding where no money or property is paid or lack of knowledge*—(1) *General rule.* A withholding agent who is not related to the recipient or beneficial owner has an obligation to withhold under section 1441 only to the extent that, at any time between the date that the obligation to withhold would arise (but for the provisions of this paragraph (d)) and the due date for the filing of return on Form 1042 (including extensions) for the year in which the payment occurs, it has control over, or custody of money or property owned by the recipient or beneficial owner from which to withhold an amount and has knowledge of the facts that give rise to the payment. The exemption from the obligation to withhold under this paragraph (d) shall not apply, however, to distributions with respect to stock or if the lack of control or custody of money or property from which to withhold is part of a pre-arranged plan known to the withholding agent to avoid withholding under section 1441, 1442, or 1443. For purposes of this paragraph (d), a withholding agent is related to the recipient or beneficial owner if it is related within the meaning of section 482. Any exemption from withholding pursuant to this paragraph (d) applies without a requirement that documentation be furnished to the withholding agent. However, documentation may have to be furnished for purposes of the information reporting provisions under chapter 61 of the Code and backup withholding under section 3406. The exemption from withholding under this paragraph (d) is not a determination that the amounts are not fixed or determinable annual or periodical income, nor does it constitute an exemption from reporting the amount under § 1.1461–1 (b) and (c).

(2) *Cancellation of debt.* A lender of funds who forgives any portion of the loan is deemed to have made a payment of income to the borrower under § 1.61–12 at the time the event of forgiveness occurs. However, based on the rules of paragraph (d)(1) of this section, the lender shall have no obligation to withhold on such amount to the extent that it does not have custody or control over money or property of the borrower at any time between the time that the loan is forgiven and the due date (including extensions) of the Form 1042 for the year in which the payment is deemed to occur. A payment received by the lender from the borrower in partial settlement of the debt obligation does not, for this purpose, constitute an amount of money or property belonging to the borrower from which the withholding tax liability can be satisfied.

(3) *Satisfaction of liability following underwithholding by withholding agent.* A withholding agent who, after failing to withhold the proper amount from a payment, satisfies the underwithheld amount out of its own funds may cause the beneficial owner to realize income to the extent of such satisfaction or may be considered to have advanced funds to the beneficial owner. Such determination depends upon the contractual arrangements governing the satisfaction of such tax liability (e.g., arrangements in which the withholding agent agrees to pay the amount due under section 1441 for the beneficial

owner) or applicable laws governing the transaction. If the satisfaction of the tax liability is considered to constitute an advance of funds by the withholding agent to the beneficial owner and the withholding agent fails to collect the amount from the beneficial owner, a cancellation of indebtedness may result, giving rise to income to the beneficial owner under §1.61–12. While such income is annual or periodical fixed or determinable, the withholding agent shall have no liability to withhold on such income to the extent the conditions set forth in paragraphs (d) (1) and (2) of this section are satisfied with respect to this income. Contrast the rules of this paragraph (d)(3) with the rules in §1.1441–3(f)(1) dealing with a situation in which the satisfaction of the beneficial owner's tax liability itself constitutes additional income to the beneficial owner. See, also, §1.1441–3(c)(2)(ii)(B) for a special rule regarding underwithholding on corporate distributions due to underestimating an amount of earnings and profits.

(4) *Withholding exemption inapplicable.* The exemption in §1.1441–2(d) from the obligation to withhold shall not apply to amounts described in §1.860G–3(b)(1) (regarding certain partnership allocations of REMIC net income with respect to a REMIC residual interest).

(e) *Payment*—(1) *General rule.* A payment is considered made to a person if that person realizes income whether or not such income results from an actual transfer of cash or other property. For example, realization of income from cancellation of debt results in a deemed payment. A payment is considered made when the amount would be includible in the income of the beneficial owner under the U.S. tax principles governing the cash basis method of accounting. A payment is considered made whether it is made directly to the beneficial owner or to another person for the benefit of the beneficial owner (e.g., to the agent of the beneficial owner). Thus, a payment of income is considered made to a beneficial owner if it is paid in complete or partial satisfaction of the beneficial owner's debt to a creditor. In the event of a conflict between the rules of this paragraph (e)(1) governing whether a payment has occurred and its timing and the rules of §31.3406(a)–4 of this chapter, the rules in §31.3406(a)–4 of this chapter shall apply to the extent that the application of section 3406 is relevant to the transaction at issue.

(2) *Income allocated under section 482.* A payment is considered made to the extent income subject to withholding is allocated under section 482. Further, income arising as a result of a secondary adjustment made in conjunction with a reallocation of income under section 482 from a foreign person to a related U.S. person is considered paid to a foreign person unless the taxpayer to whom the income is reallocated has entered into a repatriation agreement with the IRS and the agreement eliminates the liability for withholding under this section. For purposes of determining the liability for withholding, the payment of income is deemed to have occurred on the last day of the taxable year in which the transactions that give rise to the allocation of income and the secondary adjustments, if any, took place.

(3) *Blocked income.* Income is not considered paid if it is blocked under executive authority, such as the President's exercise of emergency power under the Trading with the Enemy Act (50 U.S.C. App. 5), or the International Emergency Economic Powers Act (50 U.S.C. 1701 *et seq.*). However, on the date that the blocking restrictions are removed, the income that was blocked is considered constructively received by the beneficial owner (and therefore paid for purposes of this section) and subject to withholding under §1.1441–1. Any exemption from withholding pursuant to this paragraph (e)(3) applies without a requirement that documentation be furnished to the withholding agent. However, documentation may have to be furnished for purposes of the information reporting provisions under chapter 61 of the Code and backup withholding under section 3406. The exemption from withholding granted by this paragraph (e)(3) is not a determination that the amounts are not fixed or determinable annual or periodical income.

(4) *Special rules for dividends.* For purposes of sections 1441 and 6042, in the case of stock for which the record date

is earlier than the payment date, dividends are considered paid on the payment date. In the case of a corporate reorganization, if a beneficial owner is required to exchange stock held in a former corporation for stock in a new corporation before dividends that are to be paid with respect to the stock in the new corporation will be paid on such stock, the dividend is considered paid on the date that the payee or beneficial owner actually exchanges the stock and receives the dividend. See § 31.3406(a)–4(a)(2) of this chapter.

(5) *Certain interest accrued by a foreign corporation.* For purposes of sections 1441 and 6049, a foreign corporation shall be treated as having made a payment of interest as of the last day of the taxable year if it has made an election under § 1.884–4(c)(1) to treat accrued interest as if it were paid in that taxable year.

(6) *Payments other than in U.S. dollars.* For purposes of section 1441, a payment includes amounts paid in a medium other than U.S. dollars. See § 1.1441–3(e) for rules regarding the amount subject to withholding in the case of such payments.

(7) [Reserved] For further guidance, see § 1.1441–2T(e)(7).

(f) *Effective/applicability date.* This section applies to payments made after December 31, 2000. Paragraphs (b)(5) and (d)(4) of this section apply to payments made after August 1, 2006. Paragraph (b)(6) of this section applies to payments made on or after January 23, 2012.

[T.D. 8734, 62 FR 53444, Oct. 14, 1997, as amended by T.D. 8804, 63 FR 72187, Dec. 31, 1998; T.D. 8856, 64 FR 73412, Dec. 30, 1999; T.D. 8881, 65 FR 32186, May 22, 2000; T.D. 9272, 71 FR 43366, Aug. 1, 2006; T.D. 9415, 73 FR 40172, July 14, 2008; 73 FR 45612, Aug. 6, 2008; T.D. 9572, 77 FR 3109, Jan. 23, 2012; T.D. 9648, 78 FR 73081, Dec. 5, 2013]

§ 1.1441–3 Determination of amounts to be withheld.

(a) [Reserved] For further guidance, see § 1.1441–3T(a).

(b) *Withholding on payments on certain obligations*—(1) *Withholding at time of payment of interest.* When making a payment on an interest-bearing obligation, a withholding agent must withhold under § 1.1441–1 upon the gross amount of stated interest payable on the interest payment date, regardless of whether the payment constitutes a return of capital or the payment of income within the meaning of section 61. To the extent an amount was withheld on an amount of capital rather than interest, see the rules for adjustments, refunds, or credits under § 1.1441–1(b)(8).

(2) *No withholding between interest payment dates*—(i) *In general.* A withholding agent is not required to withhold under § 1.1441–1 upon interest accrued on the date of a sale or exchange of a debt obligation when that sale occurs between two interest payment dates (even though the amount is treated as interest under § 1.61–7(c) or (d) and is subject to tax under section 871 or 881). See § 1.6045–1(c) for reporting requirements by brokers with respect to sale proceeds. See § 1.61–7(c) regarding the character of payments received by the acquirer of an obligation subsequent to such acquisition (that is, as a return of capital or interest accrued after the acquisition). Any exemption from withholding pursuant to this paragraph (b)(2)(i) applies without a requirement that documentation be furnished to the withholding agent. However, documentation may have to be furnished for purposes of the information reporting provisions under section 6045 or 6049 and backup withholding under section 3406. The exemption from withholding granted by this paragraph (b)(2) is not a determination that the accrued interest is not fixed or determinable annual or periodical income under section 871(a) or 881(a).

(ii) *Anti-abuse rule.* The exemption in paragraph (b)(2)(i) of this section does not apply if the sale of securities is part of a plan the principal purpose of which is to avoid tax by selling and repurchasing securities and the withholding agent has actual knowledge or reason to know of such plan.

(c) *Corporate distributions*—(1) *General rule.* A corporation making a distribution with respect to its stock or any intermediary (described in § 1.1441–1(c)(13)) making a payment of such a distribution is required to withhold under section 1441, 1442, or 1443 on the entire amount of the distribution, unless it elects to reduce the amount of withholding under the provisions of this paragraph (c). Any exceptions

from withholding provided by this paragraph (c) apply without any requirement to furnish documentation to the withholding agent. However, documentation may have to be furnished for purposes of the information reporting provisions under section 6042 or 6045 and backup withholding under section 3406. See §1.1461–1(c) to determine whether amounts excepted from withholding under this section are considered amounts that are subject to reporting.

(2) *Exception to withholding on distributions*—(i) *In general.* An election described in paragraph (c)(1) of this section is made by actually reducing the amount of withholding at the time that the payment is made. An intermediary that makes a payment of a distribution is not required to reduce the withholding based on the distributing corporation's estimates under this paragraph (c)(2) even if the distributing corporation itself elects to reduce the withholding on payments of distributions that it itself makes to foreign persons. Conversely, an intermediary may elect to reduce the amount of withholding with respect to the payment of a distribution even if the distributing corporation does not so elect for the payments of distributions that it itself makes of distributions to foreign persons. The amounts with respect to which a distributing corporation or intermediary may elect to reduce the withholding are as follows:

(A) A distributing corporation or intermediary may elect to not withhold on a distribution to the extent it represents a nontaxable distribution payable in stock or stock rights.

(B) A distributing corporation or intermediary may elect to not withhold on a distribution to the extent it represents a distribution in part or full payment in exchange for stock.

(C) A distributing corporation or intermediary may elect to not withhold on a distribution (actual or deemed) to the extent it is not paid out of accumulated earnings and profits or current earnings and profits, based on a reasonable estimate determined under paragraph (c)(2)(ii) of this section.

(D) A regulated investment company or intermediary may elect to not withhold on a distribution representing a capital gain dividend (as defined in section 852(b)(3)(C)) or an exempt interest dividend (as defined in section 852(b)(5)(A)) based on the applicable procedures described under paragraph (c)(3) of this section.

(E) A U.S. Real Property Holding Corporation (defined in section 897(c)(2)) or a real estate investment trust (defined in section 856) or intermediary may elect to not withhold on a distribution to the extent it is subject to withholding under section 1445 and the regulations under that section. See paragraph (c)(4) of this section for applicable procedures.

(ii) *Reasonable estimate of accumulated and current earnings and profits on the date of payment*—(A) *General rule.* A reasonable estimate for purposes of paragraph (c)(2)(i)(C) of this section is a determination made by the distributing corporation at a time reasonably close to the date of payment of the extent to which the distribution will constitute a dividend, as defined in section 316. The determination is based upon the anticipated amount of accumulated earnings and profits and current earnings and profits for the taxable year in which the distribution is made, the distributions made prior to the distribution for which the estimate is made and all other relevant facts and circumstances. A reasonable estimate may be made based on the procedures described in §31.3406(b)(2)–4(c)(2) of this chapter.

(B) *Procedures in case of underwithholding.* A distributing corporation or intermediary that is a withholding agent with respect to a distribution and that determines at the end of the taxable year in which the distribution is made that it underwithheld under section 1441 on the distribution shall be liable for the amount underwithheld as a withholding agent under section 1461. However, for purposes of this section and §1.1461–1, any amount underwithheld paid by a distributing corporation, its paying agent, or an intermediary shall not be treated as income subject to additional withholding even if that amount is treated as additional income

to the shareholders unless the additional amount is income to the shareholder as a result of a contractual arrangement between the parties regarding the satisfaction of the shareholder's tax liabilities. In addition, no penalties shall be imposed for failure to withhold and deposit the tax if—

(*1*) The distributing corporation made a reasonable estimate as provided in paragraph (c)(2)(ii)(A) of this section; and

(*2*) Either—

(*i*) The corporation or intermediary pays over the underwithheld amount on or before the due date for filing a Form 1042 for the calendar year in which the distribution is made, pursuant to § 1.1461–2(b); or

(*ii*) The corporation or intermediary is not a calendar year taxpayer and it files an amended return on Form 1042X (or such other form as the Commissioner may prescribe) for the calendar year in which the distribution is made and pays the underwithheld amount and interest within 60 days after the close of the taxable year in which the distribution is made.

(C) *Reliance by intermediary on reasonable estimate.* For purposes of determining whether the payment of a corporate distribution is a dividend, a withholding agent that is not the distributing corporation may, absent actual knowledge or reason to know otherwise, rely on representations made by the distributing corporation regarding the reasonable estimate of the anticipated accumulated and current earnings and profits made in accordance with paragraph (c)(2)(ii)(A) of this section. Failure by the withholding agent to withhold the required amount due to a failure by the distributing corporation to reasonably estimate the portion of the distribution treated as a dividend or to properly communicate the information to the withholding agent shall be imputed to the distributing corporation. In such a case, the Internal Revenue Service (IRS) may collect from the distributing corporation any underwithheld amount and subject the distributing corporation to applicable interest and penalties as a withholding agent.

(D) *Example.* The rules of this paragraph (c)(2) are illustrated by the following example:

Example. (i) *Facts.* Corporation X, a publicly traded corporation with both U.S. and foreign shareholders and a calendar year taxpayer, has an accumulated deficit in earnings and profits at the close of 2000. In 2001, Corporation X generates $1 million of current earnings and profits each month and makes an $18 million distribution, resulting in a $12 million dividend. Corporation X plans to make an additional $18 million distribution on October 1, 2002. Approximately one month before that date, Corporation X's management receives an internal report from its legal and accounting department concerning Corporation X's estimated current earnings and profits. The report states that Corporation X should generate only $5.1 million of current earnings and profits by the close of the third quarter due to costs relating to substantial organizational and product changes, but these changes will enable Corporation X to generate $1.3 million of earnings and profits monthly for the last quarter of the 2002 fiscal year. Thus, the total amount of current and earnings and profits for 2002 is estimated to be $9 million.

(ii) *Analysis.* Based on the facts in paragraph (i) of this *Example,* including the fact that earnings and profits estimate was made within a reasonable time before the distribution, Corporation X can rely on the estimate under paragraph (c)(2)(ii)(A) of this section. Therefore, Corporation X may treat $9 million of the $18 million of the October 1, 2002, distribution to foreign shareholders as a nondividend distribution.

(3) *Special rules in the case of distributions from a regulated investment company*—(i) *General rule.* If the amount of any distributions designated as being subject to section 852(b)(3)(C) or 5(A), or 871(k)(1)(C) or (2)(C), exceeds the amount that may be designated under those sections for the taxable year, then no penalties will be asserted for any resulting underwithholding if the designations were based on a reasonable estimate (made pursuant to the same procedures as described in paragraph (c)(2)(ii)(A) of this section) and the adjustments to the amount withheld are made within the time period described in paragraph (c)(2)(ii)(B) of this section. Any adjustment to the amount of tax due and paid to the IRS by the withholding agent as a result of underwithholding shall not be treated as a distribution for purposes of section 562(c) and the regulations thereunder.

Any amount of U.S. tax that a foreign shareholder is treated as having paid on the undistributed capital gain of a regulated investment company under section 852(b)(3)(D) may be claimed by the foreign shareholder as a credit or refund under § 1.1464–1.

(ii) *Reliance by intermediary on reasonable estimate.* For purposes of determining whether a payment is a distribution designated as subject to section 852(b)(3)(C) or (5)(A), or 871(k)(1)(C) or (2)(C), a withholding agent that is not the distributing regulated investment company may, absent actual knowledge or reason to know otherwise, rely on the designations that the distributing company represents have been made in accordance with paragraph (c)(3)(i) of this section. Failure by the withholding agent to withhold the required amount due to a failure by the regulated investment company to reasonably estimate the required amounts or to properly communicate the relevant information to the withholding agent shall be imputed to the distributing company. In such a case, the IRS may collect from the distributing company any underwithheld amount and subject the company to applicable interest and penalties as a withholding agent.

(4) *Coordination with withholding under section 1445*—(i) [Reserved] For further guidance, see § 1.1441–3T(c)(4)(i).

(ii) *Intermediary reliance rule.* A withholding agent that is not the distributing USRPHC must withhold under paragraph (c)(4)(i) of this section, but may, absent actual knowledge or reason to know otherwise, rely on representations made by the USRPHC regarding the determinations required under paragraph (c)(4)(i) of this section. Failure by the withholding agent to withhold the required amount due to a failure by the distributing USRPHC to make these determinations in a reasonable manner or to properly communicate the determinations to the withholding agent shall be imputed to the distributing USRPHC. In such a case, the IRS may collect from the distributing USRPHC any underwithheld amount and subject the distributing USRPHC to applicable interest and penalties as a withholding agent.

(d) [Reserved] For further guidance, see § 1.1441–3T(d).

(e) *Payments other than in U.S. dollars*—(1) *In general.* The amount of a payment made in a medium other than U.S. dollars is measured by the fair market value of the property or services provided in lieu of U.S. dollars. The withholding agent may liquidate the property prior to payment in order to withhold the required amount of tax under section 1441 or obtain payment of the tax from an alternative source. However, the obligation to withhold under section 1441 is not deferred even if no alternative source can be located. Thus, for purposes of withholding under chapter 3 of the Code, the provisions of § 31.3406(h)–2(b)(2)(ii) of this chapter (relating to backup withholding from another source) shall not apply. If the withholding agent satisfies the tax liability related to such payments, the rules of paragraph (f) of this section apply.

(2) *Payments in foreign currency.* If the amount subject to withholding tax is paid in a currency other than the U.S. dollar, the amount of withholding under section 1441 shall be determined by applying the applicable rate of withholding to the foreign currency amount and converting the amount withheld into U.S. dollars on the date of payment at the spot rate (as defined in § 1.988–1(d)(1)) in effect on that date. A withholding agent making regular or frequent payments in foreign currency may use a month-end spot rate or a monthly average spot rate. In addition, such a withholding agent may use the spot rate on the date the amount of tax is deposited (within the meaning of § 1.6302–2(a)), provided that such deposit is made within seven days of the date of the payment giving rise to the obligation to withhold. A spot rate convention must be used consistently for all non-dollar amounts withheld and from year to year. Such convention cannot be changed without the consent of the Commissioner. The U.S. dollar amount so determined shall be treated by the beneficial owner as the amount of tax paid on the income for purposes of determining the final U.S. tax liability and, if applicable, claiming a refund or credit of tax.

(f) *Tax liability of beneficial owner satisfied by withholding agent*—(1) *General rule*. In the event that the satisfaction of a tax liability of a beneficial owner by a withholding agent constitutes income to the beneficial owner and such income is of a type that is subject to withholding, the amount of the payment deemed made by the withholding agent for purposes of this paragraph (f) shall be determined under the gross-up formula provided in this paragraph (f)(1). Whether the payment of the tax by the withholding agent constitutes a satisfaction of the beneficial owner's tax liability and whether, as such, it constitutes additional income to the beneficial owner, must be determined under all the facts and circumstances surrounding the transaction, including any agreements between the parties and applicable law. The formula described in this paragraph (f)(1) is as follows:

$$\text{Payment} = \frac{\text{Gross payment without withholding}}{\text{1-(tax rate)}}$$

(2) *Example*. The following example illustrates the provisions of this paragraph (f):

Example. College X awards a qualified scholarship within the meaning of section 117(b) to foreign student, FS, who is in the United States on an F visa. FS is a resident of a country that does not have an income tax treaty with the United States. The scholarship is $20,000 to be applied to tuition, mandatory fees and books, plus benefits in kind consisting of room and board and roundtrip air transportation. College X agrees to pay any U.S. income tax owed by FS with respect to the scholarship. The fair market value of the room and board measured by the amount College X charges nonscholarship students is $6,000. The cost of the roundtrip air transportation is $2,600. Therefore, the total fair market value of the scholarship received by FS is $28,600. However, the amount taxable is limited to the fair market value of the benefits in kind ($8,600) because the portion of the scholarship amount for tuition, fees, and books is not included in gross income under section 117. The applicable rate of withholding is 14 percent under section 1441(b). Therefore, under the gross-up formula, College X is deemed to make a payment of $10,000 ($8,600 divided by (1–.14). The U.S. tax that must be deducted and withheld from the payment under section 1441(b) is $1,400 (.14×$10,000). College X reports scholarship income of $30,000 and $1,400 of U.S. tax withheld on Forms 1042 and 1042–S.

(g) *Conduit financing arrangements*—(1) *Duty to withhold*. A financed entity or other person required to withhold tax under section 1441 with respect to a financing arrangement that is a conduit financing arrangement within the meaning of § 1.881–3(a)(2)(iv) shall be required to withhold under section 1441 as if the district director had determined, pursuant to § 1.881–3(a)(3), that all conduit entities that are parties to the conduit financing arrangement should be disregarded. The amount of tax required to be withheld shall be determined under § 1.881–3(d). The withholding agent may withhold tax at a reduced rate if the financing entity establishes that it is entitled to the benefit of a treaty that provides a reduced rate of tax on a payment of the type deemed to have been paid to the financing entity. Section 1.881–3(a)(3)(ii)(E) shall not apply for purposes of determining whether any person is required to deduct and withhold tax pursuant to this paragraph (g), or whether any party to a financing arrangement is liable for failure to withhold or entitled to a refund of tax under sections 1441 or 1461 to 1464 (except to the extent the amount withheld exceeds the tax liability determined under § 1.881–3(d)). See § 1.1441–7(f) relating to withholding tax liability of the withholding agent in conduit financing arrangements subject to § 1.881–3.

(2) *Effective date*. This paragraph (g) is effective for payments made by financed entities on or after September 11, 1995. This paragraph shall not apply to interest payments covered by section 127(g)(3) of the Tax Reform Act of 1984, and to interest payments with respect to other debt obligations issued prior to October 15, 1984 (whether or not such debt was issued by a Netherlands Antilles corporation).

(h) *Dividend equivalents*—(1) *Withholding on gross amount*. The gross amount of a dividend equivalent described in section 871(m) and the regulations thereunder is subject to withholding in an amount equal to the gross amount of the dividend equivalent used in computing any net amount that is transferred to or from the taxpayer.

(2) *Effective/applicability date.* This paragraph (h) applies to payments made on or after January 23, 2012.

(i) *Effective date.* Except as otherwise provided in paragraphs (g) and (h) of this section, this section applies to payments made after December 31, 2000.

(j) [Reserved] For further guidance, see § 1.1441–3T(j).

[T.D. 6500, 25 FR 12074, Nov. 26, 1960]

EDITORIAL NOTE: For FEDERAL REGISTER citations affecting § 1.1441–3, see the List of CFR Sections Affected, which appears in the Finding Aids section of the printed volume and at *www.fdsys.gov*.

§ 1.1441–3T Determination of amounts to be withheld (temporary).

(a) *General rule*—(1) *Withholding on gross amount.* Except as otherwise provided in regulations under section 1441, the amount subject to withholding under § 1.1441–1 is the gross amount of income subject to withholding that is paid to a foreign person. The gross amount of income subject to withholding may not be reduced by any deductions, except to the extent that one or more personal exemptions are allowed as provided under § 1.1441–4(b)(6).

(2) *Coordination with chapter 4.* A withholding agent making a payment that is both a withholdable payment and an amount subject to withholding under § 1.1441–2(a) and that has withheld tax as required under chapter 4 from such payment, is not an amount required to be withheld under this section notwithstanding paragraph (a)(1) of this section. See § 1.1474–6(b)(1) for the allowance for a withholding agent to credit withholding applied under chapter 4 against its liability for tax due under sections 1441, 1442, or 1443, and see § 1.1474–6(b)(1) for the rule allowing a withholding agent to credit withholding applied under chapter 4 against its liability for tax due under sections 1441, 1442, or 1443, and § 1.1474–6(b)(2) for when such withholding is considered applied by a withholding agent. If the withholdable payment is not required to be withheld upon under chapter 4, then the withholding agent must apply the provisions of § 1.1441–1 to determine whether withholding is required under sections 1441, 1442, or 1443.

(b) through (c)(3) [Reserved] For further guidance, see § 1.1441–3(b) through (c)(3).

(4) *Coordination with withholding under section 1445*—(i) *In general.* A distribution from a U.S. Real Property Holding Corporation (USRPHC) (or from a corporation that was a USRPHC at any time during the five-year period ending on the date of distribution) with respect to stock that is a U.S. real property interest under section 897(c) or from a Real Estate Investment Trust (REIT) or other entity that is a qualified investment entity (QIE) under section 897(h)(4) with respect to its stock is subject to the withholding provisions under section 1441 (or section 1442 or 1443) and section 1445. A USRPHC making a distribution shall be treated as satisfying its withholding obligations under both sections if it withholds in accordance with one of the procedures described in either paragraph (c)(4)(i)(A) or (B) of this section. A USRPHC must apply the same withholding procedure to all the distributions made during the taxable year. However, the USRPHC may change the applicable withholding procedure from year to year. For rules regarding distributions by REITs and other entities that are QIEs, see paragraph (c)(4)(i)(C) of this section. To the extent withholding under sections 1441, 1442, or 1443 applies under this paragraph (c)(4)(i) to any portion of a distribution that is a withholdable payment, see paragraph (a)(2) for rules coordinating withholding under chapter 4.

(A) *Withholding under section 1441.* The USRPHC may choose to withhold on a distribution only under section 1441 (or 1442 or 1443) and not under section 1445. In such a case, the USRPHC must withhold under section 1441 (or 1442 or 1443) on the full amount of the distribution, whether or not any portion of the distribution represents a return of basis or capital gain. If a reduced tax rate under an income tax treaty applies to the distribution by the USRPHC, then the applicable rate of withholding on the distribution shall be no less than 10-percent, unless the applicable treaty specifies an applicable lower rate for distributions from a USRPHC, in which case the lower rate may apply.

(B) *Withholding under both sections 1441 and 1445.* As an alternative to the procedure described in paragraph (c)(4)(i)(A) of this section, a USRPHC may choose to withhold under both sections 1441 (or 1442 or 1443) and 1445 under the procedures set forth in this paragraph (c)(4)(i)(B). The USRPHC must make a reasonable estimate of the portion of the distribution that is a dividend under paragraph (c)(2)(ii)(A) of this section, and must—

(*1*) Withhold under section 1441 (or 1442 or 1443) on the portion of the distribution that is estimated to be a dividend under paragraph (c)(2)(ii)(A) of this section; and

(*2*) Withhold under section 1445(e)(3) and § 1.1445–5(e) on the remainder of the distribution or on such smaller portion based on a withholding certificate obtained in accordance with § 1.1445–5(e)(3)(iv).

(C) Coordination with REIT/QIE withholding. Withholding is required under section 1441 (or 1442 or 1443) on the portion of a distribution from a REIT or other entity that is a QIE that is not designated (for REITs) or reported (for regulated investment companies that are QIEs) as a capital gain dividend, a return of basis, or a distribution in excess of a shareholder's adjusted basis in the stock of the REIT or QIE that is treated as a capital gain under section 301(c)(3). A distribution in excess of a shareholder's adjusted basis in the stock of the REIT or QIE is, however, subject to withholding under section 1445, unless the interest in the REIT or QIE is not a U.S. real property interest (e.g., an interest in a domestically controlled REIT or QIE under section 897(h)(2)). In addition, withholding is required under section 1445 on the portion of the distribution designated (for REITs) or reported (for regulated investment companies that are QIEs) as a capital gain dividend to the extent that it is attributable to the sale or exchange of a U.S. real property interest. See § 1.1445–8.

(ii) [Reserved] For further guidance, see § 1.1441–3(c)(4)(ii).

(d) *Withholding on payments that include an undetermined amount of income*—(1) *In general.* Where the withholding agent makes a payment and does not know at the time of payment the amount that is subject to withholding because the determination of the source of the income or the calculation of the amount of income subject to tax depends upon facts that are not known at the time of payment, then the withholding agent must withhold an amount under § 1.1441–1 based on the entire amount paid that is necessary to ensure that the tax withheld is not less than 30 percent (or other applicable percentage) of the amount that could be from sources within the United States or income subject to tax. See § 1.1471–2(a)(5) for similar rules under chapter 4 that apply to payments made to payees that are entities. The amount so withheld shall not exceed 30 percent of the amount paid. With respect to a payment described in paragraph (d)(1) or (2) of this section, the withholding agent may elect to retain 30 percent of the payment to hold in escrow until the earlier of the date that the amount of income from sources within the United States or the taxable amount can be determined or one year from the date the amount is placed is in escrow, at which time the withholding becomes due under § 1.1441–1, or, to the extent that withholding is not required, the escrowed amount must be paid to the payee.

(2) *Withholding on certain gains.* Absent actual knowledge or reason to know otherwise, a withholding agent may rely on a claim regarding the amount of gain described in § 1.1441–2(c) if the beneficial owner withholding certificate, or other appropriate withholding certificate, states the beneficial owner's basis in the property giving rise to the gain. In the absence of a reliable representation on a withholding certificate, the withholding agent must withhold an amount under § 1.1441–1 that is necessary to assure that the tax withheld is not less than 30 percent (or other applicable percentage) of the recognized gain. For this purpose, the recognized gain is determined without regard to any deduction allowed by the Code from the gains. The amount so withheld shall not exceed 30 percent of the amount payable by reason of the transaction giving rise to the recognized gain. See § 1.1441–1(b)(8) regarding adjustments in the case of overwithholding.

(e) through (i) [Reserved] For further guidance, see § 1.1441–3(e) through (i).

(j) *Effective/applicability date.* (1) Except as otherwise provided in paragraph (g) of this section, this section applies to payments made after June 30, 2014. (For payments made after December 31, 2000, see this section as in effect and contained in 26 CFR part 1 revised April 1, 2013.)

(2) *Expiration date.* The applicability of this section expires on February 28, 2017.

[T.D. 9658, 79 FR 12773, Mar. 6, 2014]

§ 1.1441–4 Exemptions from withholding for certain effectively connected income and other amounts.

(a) *Certain income connected with a U.S. trade or business*—(1) *In general.* No withholding is required under section 1441 on income otherwise subject to withholding if the income is (or is deemed to be) effectively connected with the conduct of a trade or business within the United States and is includible in the beneficial owner's gross income for the taxable year. For purposes of this paragraph (a), an amount is not deemed to be includible in gross income if the amount is (or is deemed to be) effectively connected with the conduct of a trade or business within the United States and the beneficial owner claims an exemption from tax under an income tax treaty because the income is not attributable to a permanent establishment in the United States. To claim a reduced rate of withholding because the income is not attributable to a permanent establishment, see § 1.1441–6(b)(1). This paragraph (a) does not apply to income of a foreign corporation to which section 543(a)(7) applies for the taxable year or to compensation for personal services performed by an individual. See paragraph (b) of this section for compensation for personal services performed by an individual.

(2) *Withholding agent's reliance on a claim of effectively connected income*—(i) *In general.* Absent actual knowledge or reason to know otherwise, a withholding agent may rely on a claim of exemption based upon paragraph (a)(1) of this section if, prior to the payment to the foreign person, the withholding agent can reliably associate the payment with a Form W–8 upon which it can rely to treat the payment as made to a foreign beneficial owner in accordance with § 1.1441–1(e)(1)(ii). For purposes of this paragraph (a), a withholding certificate is valid only if, in addition to other applicable requirements, it includes the taxpayer identifying number of the person whose name is on the Form W–8 and represents, under penalties of perjury, that the amounts for which the certificate is furnished are effectively connected with the conduct of a trade or business in the United States and is includable in the beneficial owner's gross income for the taxable year. In the absence of a reliable claim that the income is effectively connected with the conduct of a trade or business in the United States, the income is presumed not to be effectively connected, except as otherwise provided in paragraph (a) (2)(ii) or (3) of this section. See § 1.1441–1(e)(4)(ii)(C) for the period of validity applicable to a certificate provided under this section and § 1.1441–1(e)(4)(ii)(D) for changes in circumstances arising during the taxable year indicating that the income to which the certificate relates is not, or is no longer expected to be, effectively connected with the conduct of a trade or business within the United States. A withholding certificate shall be effective only for the item or items of income specified therein. The provisions of § 1.1441–1(b)(3)(iv) dealing with a 90-day grace period shall apply for purposes of this section.

(ii) [Reserved] For further guidance, see § 1.1441–4T(a)(2)(ii).

(3) *Income on notional principal contracts*—(i) *General rule.* Except as otherwise provided in paragraph (a)(3)(iii) of this section, a withholding agent that pays amounts attributable to a notional principal contract described in § 1.863–7(a) or § 1.988–2(e) shall have no obligation to withhold on the amounts paid under the terms of the notional principal contract regardless of whether a withholding certificate is provided. However, a withholding agent must file returns under § 1.1461–1(b) and (c) reporting the income that it must treat as effectively connected with the conduct of a trade or business in the United States under the provisions of

this paragraph (a)(3). Except as otherwise provided in paragraph (a)(3)(ii) of this section, a withholding agent must treat the income as effectively connected with the conduct of a U.S. trade or business if the income is paid to, or to the account of, a qualified business unit of a foreign person located in the United States or, if the payment is paid to, or to the account of, a qualified business unit of a foreign person located outside the United States, the withholding agent knows, or has reason to know, the payment is effectively connected with the conduct of a trade or business within the United States. Income on a notional principal contract does not include the amount characterized as interest under the provisions of § 1.446–3(g)(4).

(ii) *Exception for certain payments.* A payment shall not be treated as effectively connected with the conduct of a trade or business within the United States for purposes of paragraph (a)(3)(i) of this section even if no withholding certificate is furnished if the payee provides a representation in a master agreement that governs the transactions in notional principal contracts between the parties (for example an International Swaps and Derivatives Association (ISDA) Agreement, including the Schedule thereto) or in the confirmation on the particular notional principal contract transaction that the payee is a U.S. person or a non-U.S. branch of a foreign person.

(iii) *Exception for specified notional principal contracts.* A withholding agent that makes a payment attributable to a specified notional principal contract described in section 871(m) and the regulations thereunder that is not treated as effectively connected with the conduct of a trade or business within the United States is obligated to withhold on the amount of the payment that is a dividend equivalent.

(b) *Compensation for personal services of an individual*—(1) *Exemption from withholding.* Withholding is not required under § 1.1441–1 from salaries, wages, remuneration, or any other compensation for personal services of a nonresident alien individual if such compensation is effectively connected with the conduct of a trade or business within the United States and—

(i) Such compensation is subject to withholding under section 3402 (relating to withholding on wages) and the regulations under that section;

(ii) Such compensation would be subject to withholding under section 3402 but for the provisions of section 3401(a) (not including section 3401(a)(6)) and the regulations under that section. This paragraph (b)(1)(ii) does not apply to payments to a nonresident alien individual from any trust described in section 401(a), any annuity plan described in section 403(a), any annuity, custodial account, or retirement income account described in section 403(b), or an individual retirement account or individual retirement annuity described in section 408. Instead, these payments are subject to withholding under this section to the extent they are exempted from the definition of wages under section 3401(a)(12) or to the extent they are from an annuity, custodial account, or retirement income account described in section 403(b), or an individual retirement account or individual retirement annuity described in section 408. Thus, for example, payments to a nonresident alien individual from a trust described in section 401(a) are subject to withholding under section 1441 and not under section 3405 or section 3406.

(iii) Such compensation is for services performed by a nonresident alien individual who is a resident of Canada or Mexico and who enters and leaves the United States at frequent intervals;

(iv) Such compensation is, or will be, exempt from the income tax imposed by chapter 1 of the Code by reason of a provision of the Internal Revenue Code or a tax treaty to which the United States is a party;

(v) Such compensation is paid after January 3, 1979 as a commission or rebate paid by a ship supplier to a nonresident alien individual, who is employed by a nonresident alien individual, foreign partnership, or foreign corporation in the operation of a ship or ships of foreign registry, for placing orders for supplies to be used in the operation of such ship or ships with the

supplier. See section 162(c) and the regulations thereunder for denial of deductions for illegal bribes, kickbacks, and other payments; or

(vi) Compensation that is exempt from withholding under section 3402 by reason of section 3402(e), provided that the employee and his employer enter into an agreement under section 3402(p) to provide for the withholding of income tax upon payments of amounts described in §31.3401(a)–3(b)(1) of this chapter. An employee who desires to enter into such an agreement should furnish his employer with Form W–4 (withholding exemption certificate) (or such other form as the Internal Revenue Service (IRS) may prescribe). See section 3402(f) and the regulations thereunder and §31.3402(p)-1 of this chapter.

(2) *Manner of obtaining withholding exemption under tax treaty*—(i) [Reserved] For further guidance, see §1.1441–4T(b)(2)(i).

(ii) *Withholding certificate claiming withholding exemption*. The statement claiming an exemption from withholding shall be made on Form 8233 (or an acceptable substitute or such other form as the IRS may prescribe). Form 8233 shall be dated, signed by the beneficial owner under penalties of perjury, and contain the following information—

(A) The individual's name, permanent residence address, taxpayer identifying number (or a copy of a completed Form W–7 or SS–5 showing that a number has been applied for), and the U.S. visa number, if any;

(B) The individual's current immigration status and visa type;

(C) The individual's original date of entry into the United States;

(D) The country that issued the individual's passport and the number of such passport, or the individual's permanent address if a citizen of Canada or Mexico;

(E) The taxable year for which the statement is to apply, the compensation to which it relates, and the amount (or estimated amount if exact amount not known) of such compensation;

(F) A statement that the individual is not a citizen or resident of the United States;

(G) The number of personal exemptions claimed by the individual;

(H) A statement as to whether the compensation to be paid to him or her during the taxable year is or will be exempt from income tax and the reason why the compensation is exempt;

(I) If the compensation is exempt from withholding by reason of an income tax treaty to which the United States is a party, the tax treaty and provision under which the exemption from withholding is claimed and the country of which the individual is a resident;

(J) Sufficient facts to justify the claim in exemption from withholding; and

(K) Any other information as may be required by the form or accompanying instructions in addition to, or in lieu of, the information described in this paragraph (b)(2)(ii).

(iii) [Reserved] For further guidance, see §1.1441–4T(b)(2)(iii).

(iv) *Acceptance by withholding agent*. If after the review described in paragraph (b)(2)(iii) of this section the withholding agent is satisfied that an exemption from withholding is warranted, the withholding agent may accept the statement by making a certification, verified by a declaration that it is made under the penalties of perjury, on Form 8233. The certification shall be—

(A) That the withholding agent has examined the statement,

(B) That the withholding agent is satisfied that an exemption from withholding is warranted, and

(C) That the withholding agent does not know or have reason to know that the individual's compensation is not entitled to the exemption or that the eligibility of the individual's compensation for the exemption cannot be readily determined.

(v) [Reserved] For further guidance, see §1.1441–4T(b)(2)(v).

(3) [Reserved] For further guidance, see §1.1441–4T(b)(3).

(4) *Final payment exemption*—(i) *General rule*. Compensation for independent personal services of a nonresident alien individual who is engaged during the taxable year in the conduct of a trade or business within the United States may be wholly or partially exempted

from the withholding required by §1.1441–1 from the final payment of compensation for independent personal services. This exemption does not apply to wages. This exemption from withholding is available only once during an alien individual's taxable year and is obtained by the alien individual presenting to the withholding agent a letter in duplicate from a district director stating the amount of compensation subject to the exemption and the amount that would otherwise be withheld from such final payment under section 1441 that shall be paid to the alien individual due to the exemption. The alien individual shall attach a copy of the letter to his or her income tax return for the taxable year for which the exemption is effective.

(ii) *Final payment of compensation for personal services.* For purposes of this paragraph, final payment of compensation for personal services means the last payment of compensation, other than wages, for personal services rendered within the United States that the individual expects to receive from any withholding agent during the taxable year.

(iii) *Manner of applying for final payment exemption.* In order to obtain the final payment exemption provided by paragraph (b)(4)(i) of this section, the nonresident alien individual (or his or her agent) must file the forms and provide the information required by the district director. Ordinary and necessary business expenses may be taken into account if substantiated to the satisfaction of the district director. The alien individual must submit a statement, signed by him or her and verified by a declaration that it is made under the penalties of perjury, that all the information provided is true and that to his or her knowledge no relevant information has been omitted. The information required to be submitted includes, but is not limited to—

(A) A statement by each withholding agent from whom amounts of gross income effectively connected with the conduct of a trade or business within the United States have been received by the alien individual during the taxable year, of the amount of such income paid and the amount of tax withheld, signed and verified by a declaration that it is made under penalties of perjury;

(B) A statement by the withholding agent from whom the final payment of compensation for personal services will be received, of the amount of such final payment and the amount which would be withheld under §1.1441–1 if a final payment exemption under paragraph (b)(4)(i) of this section is not granted, signed and verified by a declaration that it is made under penalties of perjury;

(C) A statement by the individual that he or she does not intend to receive any other amounts of gross income effectively connected with the conduct of a trade or business within the United States during the current taxable year;

(D) The amount of tax which has been withheld (or paid) under any other provision of the Code or regulations with respect to any income effectively connected with the conduct of a trade or business within the United States during the current taxable year;

(E) The amount of any outstanding tax liabilities (and interest and penalties relating thereto) from the current taxable year or prior taxable periods; and

(F) The provision of any income tax treaty under which a partial or complete exemption from withholding may be claimed, the country of the individual's residence, and a statement of sufficient facts to justify an exemption pursuant to such treaty.

(iv) *Letter to withholding agent.* If the district director is satisfied that the information provided under paragraph (b)(4)(iii) of this section is sufficient, the district director will, after coordination with the Director of the Foreign Operations District, ascertain the amount of the alien individual's tentative income tax for the taxable year with respect to gross income that is effectively connected with the conduct of a trade or business within the United States. After the tentative tax has been ascertained, the district director will provide the alien individual with a letter to the withholding agent stating the amount of the final payment of compensation for personal services that is exempt from withholding, and

the amount that would otherwise be withheld under section 1441 that shall be paid to the alien individual due to the exemption. The amount of compensation for personal services exempt from withholding under this paragraph (b)(4) shall not exceed $5,000.

Example 1. On July 15, 1983, B, a non-resident alien individual, appears before a district director with the information required by paragraph (b)(4)(iii) of this section. B has received personal service income in 1983 from which $3,000 has been withheld under section 1441. On August 1, 1983, B will receive $5,000 in personal service income from W. B does not intend to receive any other income subject to U.S. tax during 1983. Taking into account B's substantiated deductible business expenses, the district director computes the tentative tax liability on B's income effectively connected with the conduct of a trade or business in the United States during 1983 (including the $5,000 payment to be made on August 1, 1983) to be $3,300. B does not owe U.S. tax for any other taxable periods. The amount of B's final payment exemption is determined as follows:

(*1*) The amount of total withholding is $4,500 ($3,000 previously withheld plus $1,500, 30% of the $5,000 final payment);

(*2*) The amount of tentative excess withholding is $1,200 (total withholding of $4,500 minus B's tentative tax liability of $3,300); and

(*3*) To allow B to receive $1,200 of the amount which would otherwise have been withheld from the final payment, the district director allows a withholding exemption for $4,000 of B's final payment. W must withhold $300 from the final payment.

Example 2. The facts are the same as in Example 1 except B will receive a final payment of compensation on August 1, 1983, in the amount of $10,000 and B's tentative tax liability is $3,900. The amount of B's final payment exemption is determined as follows:

(*1*) The amount of total withholding is $6,000 ($3,000 previously withheld plus $3,000, 30% of the $10,000 final payment);

(*2*) The amount of tentative excess withholding is $2,100 (total withholding of $6,000 minus B's tentative tax liability of $3,900); and

(*3*) To allow B to receive $2,100 of the amount which would otherwise be withheld from the final payment, $7,000 of the final payment would have to be exempt from withholding; however, as no more than $5,000 of the final payment can be exempt from withholding under this paragraph (b)(4), the district director allows a withholding exemption for $5,000 of B's final payment. B must file a claim for refund at the end of the taxable year to obtain a refund of $600. W must withhold $1,500 from the final payment.

(5) *Requirement of return.* The tentative tax determined by the district director under paragraph (b)(4)(iv) of this section or by the Director of the Foreign Operations District under the withholding agreement procedure of paragraph (b)(3) of this section shall not constitute a final determination of the income tax liability of the nonresident alien individual, nor shall such determination constitute a tax return of the nonresident alien individual for any taxable period. An alien individual who applies for or obtains an exemption from withholding under the procedures of paragraphs (b) (2), (3), or (4) of this section is not relieved of the obligation to file a return of income under section 6012.

(6) *Personal exemption*—(i) *In general.* To determine the tax to be withheld at source under §1.1441–1 from remuneration paid for personal services performed within the United States by a nonresident alien individual and from scholarship and fellowship income described in paragraph (c) of this section, a withholding agent may take into account one personal exemption pursuant to sections 873(b)(3) and 151 regardless of whether the income is effectively connected. For purposes of withholding under section 1441 on remuneration for personal services, the exemption must be prorated upon a daily basis for the period during which the personal services are performed within the United States by the nonresident alien individual by dividing by 365 the number of days in the period during which the individual is present in the United States for the purpose of performing the services and multiplying the result by the amount of the personal exemption in effect for the taxable year. See §31.3402(f)(6)–1 of this chapter.

(ii) *Multiple exemptions.* More than one personal exemption may be claimed in the case of a resident of a contiguous country or a national of the United States under section 873(b)(3). In addition, residents of a country with which the United States has an income tax treaty in effect may be eligible to claim more than one personal exemption if the treaty so provides. Claims for more than one personal exemption shall be made on the withholding certificate furnished to the withholding

agent. The exemption must be prorated on a daily basis in the same manner as described in paragraph (b)(6)(i) of this section.

(iii) *Special rule where both certain scholarship and compensation income are received.* The fact that both non-compensatory scholarship income and compensation income (including compensatory scholarship income) are received during the taxable year does not entitle the taxpayer to claim more than one personal exemption amount (or more than the additional amounts permitted under paragraph (b)(6)(ii) of this section). Thus, if a nonresident alien student receives non-compensatory taxable scholarship income from one withholding agent and compensation income from another withholding agent, no more than the total personal exemption amount permitted under the Internal Revenue Code or under an income tax treaty may be taken into account by both withholding agents. For this purpose, the withholding agent may rely on a representation from the beneficial owner that the exemption amount claimed does not exceed the amount permissible under this section.

(c) *Special rules for scholarship and fellowship income*—(1) *In general.* Under section 871(c), certain amounts paid as a scholarship or fellowship for study, training, or research in the United States to a nonresident alien individual temporarily present in the United States as a nonimmigrant under section 101(a)(15) (F), (J), (M), or (Q) of the Immigration and Nationality Act are treated as income effectively connected with the conduct of a trade or business within the United States. The amounts described in the preceding sentence are those amounts that do not represent compensation for services. Such amounts (as described in the second sentence of section 1441(b)) are subject to withholding under section 1441, but at the lower rate of 14 percent. That rate may be reduced under the provisions of an income tax treaty. Claims of a reduced rate under an income tax treaty shall be made under the procedures described in §1.1441–6(b)(1). Therefore, claims for reduction in withholding under an income tax treaty on amounts described in this paragraph (c)(1) may not be made on a Form 8233. However, if the payee is receiving both compensation for personal services (including compensatory scholarship income) and non-compensatory scholarship income described in this paragraph (c)(1) from the same withholding agent, claims for reduction of withholding on both types of income may be made on Form 8233.

(2) *Alternate withholding election.* A withholding agent may elect to withhold on the amounts described in paragraph (c)(1) of this section at the rates applicable under section 3402, as if the income were wages. Such election shall be made by obtaining a Form W–4 (or an acceptable substitute or such other form as the IRS may prescribe) from the beneficial owner. The fact that the withholding agent asks the beneficial owner to furnish a Form W–4 for such fellowship or scholarship income or to take such income into account in preparing such Form W–4 shall serve as notice to the beneficial owner that the income is being treated as wages for purposes of withholding tax under section 1441.

(d) *Annuities received under qualified plans.* Withholding is not required under section §1.1441–1 in the case of any amount received as an annuity if the amount is exempt from tax under section 871(f) and the regulations under that section. The withholding agent may exempt the payment from withholding if, prior to payment, it can reliably associate the payment with documentation upon which it can rely to treat the payment as made to a beneficial owner in accordance with §1.1441–1(e)(1)(ii). A beneficial owner withholding certificate furnished for purposes of claiming the benefits of the exemption under this paragraph (d) is valid only if, in addition to other applicable requirements, it contains a taxpayer identifying number.

(e) *Per diem of certain alien trainees.* Withholding is not required under section 1441(a) and §1.1441–1 on per diem amounts paid for subsistence by the United States Government (directly or by contract) to any nonresident alien individual who is engaged in any program of training in the United States under the Mutual Security Act of 1954, as amended (22 U.S.C. chapter 24). This rule shall apply even though such

amounts are subject to tax under section 871. Any exemption from withholding pursuant to this paragraph (e) applies without a requirement that documentation be furnished to the withholding agent. However, documentation may have to be furnished for purposes of the information reporting provisions under section 6041 and backup withholding under section 3406. The exemption from withholding granted by this paragraph (e) is not a determination that the amounts are not fixed or determinable annual or periodical income.

(f) *Failure to receive withholding certificates timely or to act in accordance with applicable presumptions.* See applicable procedures described in §1.1441–1(b)(7) in the event the withholding agent does not hold an appropriate withholding certificate or other appropriate documentation at the time of payment or does not act in accordance with applicable presumptions described in paragraph (a) (2)(i), (2)(ii), or (3) of this section.

(g) *Effective/applicability date*—(1) *General rule.* This section applies to payments made after December 31, 2000, except that paragraph (a)(3)(iii) of this section applies to payments made on or after January 23, 2013.

(2) *Transition rules.* The validity of a Form 4224 or 8233 that was valid on January 1, 1998, under the regulations in effect prior to January 1, 2001 (see 26 CFR part 1, revised April 1, 1999) and expired, or will expire, at any time during 1998, is extended until December 31, 1998. The validity of a Form 4224 or 8233 that is valid on or after January 1, 1999, remains valid until its validity expires under the regulations in effect prior to January 1, 2001 (see 26 CFR part 1, revised April 1, 1999) but in no event will such form remain valid after December 31, 2000. The rule in this paragraph (g)(2), however, does not apply to extend the validity period of a Form 4224 or 8223 that expires solely by reason of changes in the circumstances of the person whose name is on the certificate. Notwithstanding the first three sentences of this paragraph (g)(2), a withholding agent may choose to not take advantage of the transition rule in this paragraph (g)(2) with respect to one or more withholding certificates valid under the regulations in effect prior to January 1, 2001 (see 26 CFR part 1, revised April 1, 1999) and, therefore, to require withholding certificates conforming to the requirements described in this section (new withholding certificates). For purposes of this section, a new withholding certificate is deemed to satisfy the documentation requirement under the regulations in effect prior to January 1, 2001 (see 26 CFR part 1, revised April 1, 1999). Further, a new withholding certificate remains valid for the period specified in §1.1441–1(e)(4)(ii), regardless of when the certificate is obtained.

(3) [Reserved] For further guidance, see §1.1441–4T(g)(3).

(h) [Reserved] For further guidance, see §1.1441–4T(h).

[T.D. 6500, 25 FR 12075, Nov. 26, 1960]

EDITORIAL NOTE: For FEDERAL REGISTER citations affecting §1.1441–4, see the List of CFR Sections Affected, which appears in the Finding Aids section of the printed volume and at *www.fdsys.gov.*

§1.1441–4T Exemptions from withholding for certain effectively connected income and other amounts (temporary).

(a)(1) through (a)(2)(i) [Reserved] For further guidance, see §1.1441–4(a) through (a)(2)(i).

(ii) *Special rules for U.S. branches of foreign persons*—(A) *U.S. branches of certain foreign banks or foreign insurance companies.* A payment to a U.S. branch described in §1.1441–1(b)(2)(iv)(B)(3) is presumed to be effectively connected with the conduct of a trade or business in the United States without the need to furnish a certificate if the withholding agent obtains an EIN for the entity, unless the U.S. branch provides a U.S. branch withholding certificate described in §1.1441–1(e)(3)(v) that represents otherwise. If no certificate is furnished but the income is not, in fact, effectively connected income, then the branch must withhold whether the payment is collected on behalf of other persons or on behalf of another branch of the same entity. See §1.1441–1(b)(2)(iv) and (b)(6) for general rules applicable to payments to U.S. branches of foreign persons.

(B) *Other U.S. branches.* See §1.1441–1(b)(2)(iv)(E) for similar procedures for

other U.S. branches to the extent provided in a determination letter from the IRS.

(3) [Reserved] For further guidance, see § 1.1441–4(a)(3).

(b)(1) [Reserved] For further guidance, see § 1.1441–4(b)(1).

(2) *Manner of obtaining withholding exemption under tax treaty*—(i) *In general.* In order to obtain the exemption from withholding by reason of a tax treaty, provided by paragraph (b)(1)(iv) of this section, a nonresident alien individual must submit a withholding certificate (described in paragraph (b)(2)(ii) of this section) to each withholding agent from whom amounts are to be received. A separate withholding certificate must be filed for each taxable year of the alien individual. If the withholding agent is satisfied that an exemption from withholding is warranted (see paragraph (b)(2)(iii) of this section), the withholding certificate shall be accepted in the manner set forth in paragraph (b)(2)(iv) of this section. The exemption from withholding becomes effective for payments made at least ten days after a copy of the accepted withholding certificate is forwarded to the IRS. The withholding agent may rely on an accepted withholding certificate only if the IRS has not objected to the certificate. For purposes of this paragraph (b)(2)(i), the IRS will be considered to have not objected to the certificate if it has not notified the withholding agent within a 10-day period beginning from the date that the withholding certificate is forwarded to the IRS pursuant to paragraph (b)(2)(v) of this section. After expiration of the 10-day period, the withholding agent may rely on the withholding certificate retroactive to the date of the first payment covered by the certificate. The fact that the IRS does not object to the withholding certificate within the 10-day period provided in this paragraph (b)(2)(i) shall not preclude the IRS from examining the withholding agent at a later date with respect to facts that the withholding agent knew or had reason to know regarding the payment and eligibility for a reduced rate and that were not disclosed to the IRS as part of the 10-day review process.

(ii) [Reserved] For further guidance, see § 1.1441–4(b)(2)(ii).

(iii) *Review by withholding agent.* The exemption from withholding provided by paragraph (b)(1)(iv) of this section shall not apply unless the withholding agent accepts (in the manner provided in paragraph (b)(2)(iv) of this section) the statement on Form 8233, ''Exemption From Withholding on Compensation for Independent (and Certain Dependent) Personal Services of a Nonresident Alien Individual,'' (or successor form) supplied by the nonresident alien individual. Before accepting the statement, the withholding agent must examine the statement. If the withholding agent knows or has reason to know that any of the facts or assertions on Form 8233 may be false or that the eligibility of the individual's compensation for the exemption cannot be readily determined, the withholding agent may not accept the statement on Form 8233 and is required to withhold under this section. If the withholding agent accepts the statement and subsequently finds that any of the facts or assertions contained on Form 8233 may be false or that the eligibility of the individual's compensation for the exemption can no longer be readily determined, then the withholding agent shall promptly so notify the IRS by letter, and the withholding agent is not relieved of liability to withhold on any amounts still to be paid. If the withholding agent is notified by the IRS that the eligibility of the individual's compensation for the exemption is in doubt or that such compensation is not eligible for the exemption, the withholding agent is required to withhold under this section. The rules of this paragraph (b)(2) are illustrated by the following examples.

Example 1. C, a nonresident alien individual, submits Form 8233 to W, a withholding agent. The statement on Form 8233 does not include all the information required by paragraph (b)(2)(ii) of this section. Therefore, W has reason to know that he or she cannot readily determine whether C's compensation for personal services is eligible for an exemption from withholding and, therefore, W must withhold.

Example 2. D, a nonresident alien individual, is performing services for W, a withholding agent. W has accepted a statement on Form 8233 submitted by D, according to the provisions of this section. W receives notice from the Internal Revenue Service that the eligibility of D's compensation for a

withholding exemption is in doubt. Therefore, W has reason to know that the eligibility of the compensation for a withholding exemption cannot be readily determined, as of the date W receives the notification, and W must withhold tax under section 1441 on amounts paid after receipt of the notification.

Example 3. E, a nonresident alien individual, submits Form 8233 to W, a withholding agent for whom E is to perform personal services. The statement contains all the information requested on Form 8233. E claims an exemption from withholding based on a personal exemption amount computed on the number of days E will perform personal services for W in the United States. If W does not know or have reason to know that any statement on the Form 8233 is false or that the eligibility of E's compensation for the withholding exemption cannot be readily determined, W can accept the statement on Form 8233 and exempt from withholding the appropriate amount of E's income.

(iv) [Reserved] For further guidance, see § 1.1441–4(b)(2)(iv).

(v) *Copies of Form 8233.* The withholding agent shall forward one copy of each Form 8233 that is accepted under paragraph (b)(2)(iv) of this section to the IRS within five days of such acceptance. The withholding agent shall retain a copy of Form 8233.

(3) *Withholding agreements.* Compensation for personal services of a nonresident alien individual who is engaged during the taxable year in the conduct of a trade or business within the United States may be wholly or partially exempted from the withholding required by § 1.1441–1 if an agreement is reached between the IRS and the alien individual with respect to the amount of withholding required. Such agreement shall be available in the circumstances and in the manner set forth by the Internal Revenue Service, and shall be effective for payments covered by the agreement that are made after the agreement is executed by all parties. The alien individual must agree to timely file an income tax return for the current taxable year.

(b)(4) through (g)(2) [Reserved] For further guidance, see § 1.1441–4(b)(4) through (g)(2).

(g)(3) *Effective/applicability date.* This section applies to payments made after June 30, 2014. (For payments made after December 31, 2000, see this section as in effect and contained in 26 CFR part 1 revised April 1, 2013.)

(h) *Expiration date.* The applicability of this section expires on February 28, 2017.

[T.D. 9658, 79 FR 12774, Mar. 6, 2014]

§ 1.1441–5 Withholding on payments to partnerships, trusts, and estates.

(a) *In general.* This section describes the rules that apply to payments made to partnerships, trusts, and estates. Paragraph (b) of this section prescribes the rules that apply to a withholding agent making a payment to a U.S. partnership, trust, or estate. It also prescribes the obligations of a U.S. partnership, trust, or estate that makes a payment to a foreign partner, beneficiary, or owner. Paragraph (c) of this section prescribes rules that apply to a withholding agent that makes a payment to a foreign partnership. Paragraph (d) of this section provides presumption rules that apply to payments made to foreign partnerships. Paragraph (e) of this section prescribes rules, including presumption rules, that apply to a withholding agent that makes a payment to a foreign trust or foreign estate.

(b) *Rules applicable to U.S. partnerships, trusts, and estates*—(1) *Payments to U.S. partnerships, trusts, and estates.* No withholding is required under section 1.1441–1(b)(1) on a payment of an amount subject to withholding (as defined in § 1.1441–2(a)) that a withholding agent may treat as made to a U.S. payee. Therefore, if a withholding agent can reliably associate (within the meaning of § 1.1441–2(b)(vii)) a Form W–9 provided in accordance with § 1.1441–1(d)(2) or (4) by a U.S. partnership, U.S. trust, or a U.S. estate the withholding agent may treat the payment as made to a U.S. payee and the payment is not subject to withholding under section 1441 even though the partnership, trust, or estate may have foreign partners, beneficiaries, or owners. A withholding agent is also not required to withhold under section 1441 on a payment it makes to an entity presumed to be a U.S. payee under paragraphs (d)(2) and (e)(6)(ii) of this section.

(2) *Withholding by U.S. payees*—(i) *U.S. partnerships*—(A) *In general.* A U.S.

partnership is required to withhold under §1.1441–1 as a withholding agent on an amount subject to withholding (as defined in §1.1441–2(a)) that is includible in the gross income of a partner that is a foreign person. Subject to paragraph (b)(2)(v) of this section, a U.S. partnership shall withhold when any distributions that include amounts subject to withholding (including guaranteed payments made by a U.S. partnership) are made. To the extent a foreign partner's distributive share of income subject to withholding has not actually been distributed to the foreign partner, the U.S. partnership must withhold on the foreign partner's distributive share of the income on the earlier of the date that the statement required under section 6031(b) is mailed or otherwise provided to the partner or the due date for furnishing the statement.

(B) *Effectively connected income of partners.* Withholding on items of income that are effectively connected income in the hands of the partners who are foreign persons is governed by section 1446 and not by this section. In such a case, partners in a domestic partnership are not required to furnish a withholding certificate in order to claim an exemption from withholding under section 1441(c)(1) and §1.1441–4.

(ii) *U.S. simple trusts.* A U.S. trust that is described in section 651(a) (a U.S. simple trust) is required to withhold under chapter 3 of the Internal Revenue Code as a withholding agent on the distributable net income includible in the gross income of a foreign beneficiary to the extent the distributable net income is an amount subject to withholding (as defined in §1.1441–2(a)). A U.S. simple trust shall withhold when a distribution is made to a foreign beneficiary. The U.S. trust may make a reasonable estimate of the portion of the distribution that constitutes distributable net income consisting of an amount subject to withholding and apply the appropriate rate of withholding to the estimated amount. If, at the end of the taxable year in which the distribution is made, the U.S. simple trust determines that it underwithheld under section 1441 or 1442, the trust shall be liable as a withholding agent for the amount under withheld under section 1461. No penalties shall be imposed for failure to withhold and deposit the tax if the U.S. simple trust's estimate was reasonable and the trust pays the underwithheld amount on or before the due date of Form 1042 under section 1461. Any payment of underwithheld amounts by the U.S. simple trust shall not be treated as income subject to additional withholding even if that amount is treated as additional income to the foreign beneficiary, unless the additional amount is income to the foreign beneficiary as a result of a contractual arrangement between the parties regarding the satisfaction of the foreign beneficiary's tax liability. To the extent a U.S. simple trust is required to, but does not, distribute such income to a foreign beneficiary, the U.S. trust must withhold on the foreign beneficiary's allocable share at the time the income is required (without extension) to be reported on Form 1042-S under §1.1461–1(c).

(iii) [Reserved] For further guidance, see §1.1441–5T(b)(2)(iii).

(iv) *U.S. grantor trusts.* A U.S. trust that is described in section 671 through 679 (a U.S. grantor trust) must withhold on any income includible in the gross income of a foreign person that is treated as an owner of the grantor trust to the extent the amount includible consists of an amount that is subject to withholding (as described in §1.1441–2(a)). The withholding must occur at the time the income is received by, or credited to, the trust.

(v) *Subsequent distribution.* If a U.S. partnership or U.S. trust withholds on a foreign partner, beneficiary, or owner's share of an amount subject to withholding before the amount is actually distributed to the partner, beneficiary, or owner, withholding is not required when the amount is subsequently distributed.

(vi) [Reserved] For further guidance, see §1.1441–5T(b)(2)(vi).

(c) *Foreign partnerships*—(1) *Determination of payee*—(i) [Reserved] For further guidance, see §1.1441–5T(c)(1)(i).

(A) If the withholding agent can reliably associate a partner's distributive share of the payment with a valid Form W–9 provided under §1.1441–1(d), the partner is a U.S. payee;

(B) If the withholding agent can reliably associate a partner's distributive share of the payment with a valid Form W–8, or other appropriate documentation, provided under §1.1441–1(e)(1)(ii), the partner is a payee that is a foreign beneficial owner;

(C) [Reserved] For further guidance, see §1.1441–5T(c)(1)(i)(C).

(D) If the withholding agent can reliably associate the partner's distributive share with a withholding foreign partnership certificate under paragraph (c)(2)(iv) of this section or a nonwithholding foreign partnership certificate under paragraph (c)(3)(iii) of this section, then the rules of this paragraph (c)(1)(i) or paragraph (c)(1)(ii) of this section shall apply to determine whether the payment is treated as made to the partners of the higher-tier partnership under this paragraph (c)(1)(i) or to the higher-tier partnership itself (under the rules of paragraph (c)(1)(ii) of this section) in the same manner as if the partner's distributive share of the payment had been paid directly to the higher-tier foreign partnership;

(E) If the withholding agent can reliably associate the partner's distributive share with a withholding certificate described in paragraph (e) of this section regarding a foreign trust or estate, then the rules of paragraph (e) of this section shall apply to determine who the payees are; and

(F) If the withholding agent cannot reliably associate the partner's distributive share with a withholding certificate or other appropriate documentation, the partners are considered to be the payees and the presumptions described in paragraph (d)(3) of this section shall apply to determine their classification and status.

(ii) *Payments treated as made to the partnership.* A payment to a person that the withholding agent may treat as a foreign partnership is treated as a payment to the foreign partnership and not to its partners only if—

(A) The withholding agent can reliably associate the payment with a withholding certificate described in paragraph (c)(2)(iv) of this section (withholding certificate of a withholding foreign partnership);

(B) The withholding agent can reliably associate the payment with a withholding certificate described in paragraph (c)(3)(iii) of this section (nonwithholding foreign partnership) certifying that the payment is income that is effectively connected with the conduct of a trade or business in the United States; or

(C) The withholding agent can treat the income as effectively connected income under the presumption rules of §1.1441–4(a)(2)(ii) or (3)(i).

(iii) *Rules for reliably associating a payment with documentation.* For rules regarding the reliable association of a payment with documentation, see §1.1441–1(b)(2)(vii). In the absence of documentation, see §§1.1441–1(b)(3) and 1.6049–5(d) and paragraphs (d) and (e)(6) of this section for applicable presumptions.

(iv) and (v) [Reserved] For further guidance, see §1.1441–5T(c)(1)(iv) and (v).

(2) *Withholding foreign partnerships*—(i) through (iii) [Reserved] For further guidance, see §1.1441–5T(c)(2)(i) through (c)(2)(iii).

(iv) *Withholding certificate from a withholding foreign partnership.* The rules of §1.1441–1(e)(4) shall apply to withholding certificates described in this paragraph (c)(2)(iv). A withholding certificate furnished by a withholding foreign partnership is valid with regard to any partner on whose behalf the certificate is furnished only if it is furnished on a Form W–8, an acceptable substitute form, or such other form as the IRS may prescribe, it is signed under penalties of perjury by a partner with authority to sign for the partnership, its validity has not expired, and it contains the information, statement, and certifications described in this paragraph (c)(2)(iv) as follows—

(A) and (B) [Reserved] For further guidance, see §1.1441–5T(c)(2)(iv)(A) and (B).

(C) Any other information, certifications or statements as may be required by the withholding foreign partnership agreement with the IRS or the form or accompanying instructions in addition to, or in lieu of, the information, statements, and certifications described in this paragraph (c)(2)(iv).

(3) *Nonwithholding foreign partnerships*—(i) and (ii) [Reserved] For further guidance, see §1.1441–5T(c)(3)(i) and (ii).

(iii) *Withholding certificate from a nonwithholding foreign partnership.* A nonwithholding foreign partnership shall provide a nonwithholding foreign partnership withholding certificate with respect to reportable amounts received by the nonwithholding foreign partnership. A nonwithholding foreign partnership withholding certificate is valid only to the extent it is furnished on a Form W–8 (or an acceptable substitute form or such other form as the IRS may prescribe), it is signed under penalties of perjury by a partner with authority to sign for the partnership, its validity has not expired, and it contains the information, statements, and certifications described in this paragraph (c)(3)(iii) and paragraph (c)(3)(iv) of this section, and the withholding certificates and other appropriate documentation for all the persons to whom the certificate relates are associated with the certificate. The rules of §1.1441–1(e)(4) shall apply to withholding certificates described in this paragraph (c)(3)(iii). No withholding certificates or other appropriate documentation from persons who derive income through a partnership (whether or not U.S. exempt recipients) are required to be associated with the nonwithholding foreign partnership withholding certificate if the certificate is furnished solely for income claimed to be effectively connected with the conduct of a trade or business in the United States. Withholding certificates and other appropriate documentation that may be associated with the nonwithholding foreign partnership withholding certificate consist of beneficial owner withholding certificates under §1.1441–1(e)(2)(i), intermediary withholding certificates under §1.1441–1(e)(3)(i), withholding foreign partnership withholding certificates under paragraph (c)(2)(iv) of this section, nonwithholding foreign partnership withholding certificates under this paragraph (c)(3)(iii), withholding certificates from foreign trusts or estates under paragraph (e) of this section, documentary evidence described in §1.1441–6(c)(3) or (4) or documentary evidence described in §1.6049–5(c)(1), and any other documentation or certificates applicable under other provisions of the Internal Revenue Code or regulations that certify or establish the status of the payee or beneficial owner as a U.S. or a foreign person. Nothing in this paragraph (c)(3)(iii) shall require a nonwithholding foreign partnership to furnish original documentation. Copies of certificates or documentary evidence may be transmitted to the U.S. withholding agent, in which case the nonwithholding foreign partnership must retain the original documentation for the same time period that the copy is required to be retained by the withholding agent under §1.1441–1(e)(4)(iii) and must provide it to the withholding agent upon request. The information, statement, and certifications required on the withholding certificate are as follows—

(A) [Reserved] For further guidance, see §1.1441–5T(c)(3)(iii)(A).

(B) A certification that the person whose name is on the certificate is a foreign partnership;

(C) A withholding statement associated with the nonwithholding foreign partnership withholding certificate that provides all of the information required by paragraph (c)(3)(iv) of this section and §1.1441–1(e)(3)(iv). No withholding statement is required, however, for a nonwithholding foreign partnership withholding certificate furnished for income claimed to be effectively connected with the conduct of a trade or business in the United States;

(D) A certification that the income is effectively connected with the conduct of a trade or business in the United States, if applicable; and

(E) Any other information, certifications, or statements required by the form or accompanying instructions in addition to, or in lieu of, the information and certifications described in this paragraph (c)(3)(iii).

(iv) and (v) [Reserved] For further guidance, see §1.1441–5T(c)(3)(iv) and (v).

(d) *Presumption rules*—(1) *In general.* This paragraph (d) contains the applicable presumptions for a withholding agent (including a partnership) to determine the classification and status of

a partnership and its partners in the absence of documentation. The provisions of §1.1441–1(b)(3)(iv) (regarding the 90-day grace period) and §1.1441–1(b)(3)(vii) through (ix) shall apply for purposes of this paragraph (d).

(2) through (4) [Reserved] For further guidance, see §1.1441–5T(d)(2) through (d)(4).

(e) *Foreign trusts and estates*—(1) *In general.* This paragraph (e) provides rules applicable to payments of amounts subject to withholding (as defined in §1.1441–2(a)) that a withholding agent may treat as made to any foreign trust or a foreign estate. For rules relating to payments to a U.S. trust or a U.S. estate, see paragraph (b) of this section. For the definitions of foreign simple trust, foreign complex trust, and foreign grantor trust, see §1.1441–1(c)(24), (25), and (26).

(2) *Payments to foreign complex trusts and foreign estates.* Under §1.1441–1(c)(6)(ii)(D), a foreign complex trust or foreign estate is generally considered to be the beneficial owner of income paid to the foreign complex trust or foreign estate. See paragraph (e)(4) of this section for rules describing when a withholding agent may treat a payment as made to a foreign complex trust or a foreign estate.

(3) *Payees of payments to foreign simple trusts and foreign grantor trusts*—(i) *Payments for which beneficiaries and owners are payees.* For purposes of the regulations under chapters 3 and 61 of the Internal Revenue Code and section 3406, a foreign simple trust is not a beneficial owner or a payee of a payment. Also, a foreign grantor trust (or a portion of a trust that is a foreign grantor trust) is not considered a beneficial owner or a payee of a payment. Except as otherwise provided in paragraph (e)(3)(ii) of this section, the payees of a payment made to a person that the withholding agent may treat as a foreign simple trust or a foreign grantor trust (or a portion of a trust that is a foreign grantor trust) are determined under the rules of this paragraph (e)(3)(i). The payees shall be treated as the beneficial owners if they may be so treated under §1.1441–1(c)(6)(ii)(C) and they provide documentation supporting their status as the beneficial owners. The payees of a payment to a foreign simple trust or foreign grantor trust are determined as follows—

(A) If the withholding agent can reliably associate a payment with a valid Form W–9 provided under §1.1441–1(d) from a beneficiary or owner of the foreign trust, then the beneficiary or owner is a U.S. payee;

(B) If the withholding agent can reliably associate a payment with a valid Form W–8, or other appropriate documentation, provided under §1.1441–1(e)(1)(ii) from a beneficiary or owner of the foreign trust, then the beneficiary or owner is a payee that is a foreign beneficial owner;

(C) If the withholding agent can reliably associate a payment with a qualified intermediary withholding certificate under §1.1441–1(e)(3)(ii), a nonqualified intermediary withholding certificate under §1.1441–1(e)(3)(ii), or a U.S. branch withholding certificate under §1.1441–1(e)(3)(v), then the rules of §1.1441–1(b)(2)(v) shall apply to determine the payee in the same manner as if the payment had been paid directly to such intermediary or U.S. branch;

(D) If the withholding agent can reliably associate a payment with a withholding foreign partnership withholding certificate under paragraph (c)(2)(iv) of this section or a nonwithholding foreign partnership withholding certificate under paragraph (c)(3)(iii) of this section, then the rules of paragraph (c)(1)(i) or (ii) of this section shall apply to determine the payee;

(E) If the withholding agent can reliably associate the payment with a foreign simple trust withholding certificate or a foreign grantor trust withholding certificate (both described in paragraph (e)(5)(iii) of this section) from a second or higher-tier foreign simple trust or foreign grantor trust, then the rules of this paragraph (e)(3)(i) or paragraph (e)(3)(ii) of this section shall apply to determine whether the payment is treated as made to a beneficiary or owner of the higher-tier trust or to the trust itself in the same manner as if the payment had been made directly to the higher-tier trust; and

(F) If the withholding agent cannot reliably associate a payment with a withholding certificate or other appropriate documentation, the payees shall

be determined by applying the presumptions described in paragraph (e)(6) of this section.

(ii) *Payments for which trust is payee.* A payment to a person that the withholding agent may treat as made to a foreign trust under paragraph (e)(5)(iii) of this section is treated as a payment to the trust, and not to a beneficiary of the trust, only if—

(A) The withholding agent can reliably associate the payment with a foreign complex trust withholding certificate under paragraph (e)(4) of this section;

(B) The withholding agent can reliably associate the payment with a foreign simple trust withholding certificate under paragraph (e)(5)(iii) of this section certifying that the payment is income that is treated as effectively connected with the conduct of a trade or business in the United States; or

(C) The withholding agent can treat the income as effectively connected income under the presumption rules of §1.1441–4(a)(3)(i).

(iii) [Reserved] For further guidance, see §1.1441–5T(e)(3)(iii).

(4) *Reliance on claim of foreign complex trust or foreign estate status.* A withholding agent may treat a payment as made to a foreign complex trust or a foreign estate if the withholding agent can reliably associate the payment with a beneficial owner withholding certificate described in §1.1441–1(e)(2)(i) or other documentary evidence under §1.1441–6(c)(3) or (4) (regarding a claim for treaty benefits) or §1.6049–5(c)(1) (regarding documentary evidence to establish foreign status for purposes of chapter 61 of the Internal Revenue Code) that establishes the foreign complex trust or foreign estate's status as a beneficial owner. See paragraph (e)(6) of this section for presumption rules if documentation is lacking.

(5) *Foreign simple trust and foreign grantor trust*—(i) and (ii) [Reserved] For further guidance, see §1.1441–5T(e)(5)(i) and (ii).

(iii) *Withholding certificate from foreign simple trust or foreign grantor trust.* A withholding certificate furnished by a foreign simple trust or a foreign grantor trust that is not a withholding foreign trust (within the meaning of paragraph (e)(5)(v) of this section) is valid only if it is furnished on a Form W–8, an acceptable substitute form, or such other form as the IRS may prescribe, it is signed under penalties of perjury by a trustee, its validity has not expired, it contains the information, statements, and certifications required by this paragraph (e)(5)(iii) and §1.1441–1(e)(3)(iv), and the withholding certificates or other appropriate documentation for all of the payees (as determined under paragraph (e)(3)(i) of this section) to whom the certificate relates are associated with the foreign simple trust or foreign grantor trust withholding certificate. The rules of §1.1441–1(e)(4) shall apply to withholding certificates described in this paragraph (e)(5)(iii). No withholding certificates or other appropriate documentation from persons who derive income through a foreign simple trust or a foreign grantor trust (whether or not U.S. exempt recipients) are required to be associated with the foreign simple trust or foreign grantor trust withholding certificate if the certificate is furnished solely for income that is treated as effectively connected with the conduct of a trade or business in the United States. Withholding certificates and other appropriate documentation (as determined under paragraph (e)(3)(i) of this section) that may be associated with a foreign simple trust or foreign grantor trust withholding certificate consist of beneficial owner withholding certificates under §1.1441–1(e)(2)(i), intermediary withholding certificates under §1.1441–1(e)(3)(i), withholding foreign partnership withholding certificates under paragraph (c)(2)(iv) of this section, nonwithholding foreign partnership withholding certificates under paragraph (c)(3)(iii) of this section, withholding certificates from foreign trusts or estates under paragraph (e)(4) or (5)(iii) of this section, documentary evidence described in §§1.1441–6(c)(3) or (4), or 1.6049–5(c)(1), and any other documentation or certificates applicable under other provisions of the Internal Revenue Code or regulations that certify or establish the status of the payee or beneficial owner as a U.S. or a foreign person. Nothing in this paragraph (e)(5)(iii) shall require a foreign simple

trust or foreign grantor trust to provide original documentation. Copies of certificates or documentary evidence may be passed up to the U.S. withholding agent, in which case the foreign simple trust or foreign grantor trust must retain the original documentation for the same time period that the copy is required to be retained by the withholding agent under § 1.1441–1(e)(4)(iii) and must provide it to the withholding agent upon request. The information, statement, and certifications required on a foreign simple trust or foreign grantor trust withholding certificate are as follows—

(A) [Reserved] For further guidance, see § 1.1441–5T(e)(5)(iii)(A).

(B) A certification that the person whose name is on the certificate is a foreign simple trust or a foreign grantor trust;

(C) A withholding statement associated with the foreign simple trust or foreign grantor trust withholding certificate that provides all of the information required by paragraph (e)(5)(iv) of this section. No withholding statement is required, however, for a foreign simple trust withholding certificate furnished for income that is treated as effectively connected with the conduct of a trade or business in the United States;

(D) A certification on a foreign simple trust withholding certificate that the income is treated as effectively connected with the conduct of a trade or business in the United States, if applicable; and

(E) Any other information, certifications, or statements required by the form or accompanying instructions in addition to, or in lieu of, the information, certifications, and statements described in this paragraph (e)(5)(iii);

(iv) and (v) [Reserved] For further guidance, see § 1.1441–5T(e)(5)(iv) and (v).

(6) *Presumption rules*—(i) *In general.* This paragraph (e)(6) contains the applicable presumptions for a withholding agent (including a trust or estate) to determine the classification and status of a trust or estate and its beneficiaries or owners in the absence of valid documentation. The provisions of § 1.1441–1(b)(3)(iv) (regarding the 90-day grace period) and § 1.1441–1(b)(3)(vii) through (ix) shall apply for purposes of this paragraph (e)(6).

(ii) [Reserved] For further guidance, see § 1.1441–5T(e)(6)(ii).

(iii) *Determination of beneficiary or owner's status in the absence of certain documentation.* If a foreign simple trust or foreign grantor trust has provided a foreign simple trust or foreign grantor trust withholding certificate under paragraph (e)(5)(iii) of this section but the payment to such trust cannot be reliably associated with valid documentation from a specific beneficiary or owner of the trust, then any portion of a payment that a withholding agent cannot treat as reliably associated with valid documentation from a beneficiary or owner may be presumed made to a foreign payee. As a result, any payment of an amount subject to withholding is subject to withholding at a rate of 30 percent. Any such payment that is presumed to be made to an undocumented foreign person must be reported on Form 1042–S. See § 1.1461–1(c).

(f) [Reserved] For further guidance, see § 1.1441–5T(f).

(g) *Effective date*—(1) *General rule.* This section applies to payments made after December 31, 2000.

(2) *Transition rules.* The validity of a withholding certificate that was valid on January 1, 1998, under the regulations in effect prior to January 1, 2001 (see 26 CFR parts 1 and 35a, revised April 1, 1999) and expired, or will expire, at any time during 1998, is extended until December 31, 1998. The validity of a withholding certificate that is valid on or after January 1, 1999, remains valid until its validity expires under the regulations in effect prior to January 1, 2001 (see 26 CFR parts 1 and 35a, revised April 1, 1999) but in no event will such a withholding certificate remain valid after December 31, 2000. The rule in this paragraph (g)(2), however, does not apply to extend the validity period of a withholding certificate that expires solely by reason of changes in the circumstances of the person whose name is on the certificate. Notwithstanding the first three sentences of this paragraph (g)(2), a withholding agent may choose to not take advantage of the transition rule in this paragraph (g)(2) with respect to

one or more withholding certificates valid under the regulations in effect prior to January 1, 2001 (see 26 CFR parts 1 and 35a, revised April 1, 1999) and, therefore, to require withholding certificates conforming to the requirements described in this section (new withholding certificates). For purposes of this section, a new withholding certificate is deemed to satisfy the documentation requirement under the regulations in effect prior to January 1, 2001 (see 26 CFR parts 1 and 35a, revised April 1, 1999). Further, a new withholding certificate remains valid for the period specified in §1.1441–1(e)(4)(ii), regardless of when the certificate is obtained.

(3) [Reserved] For further guidance, see §1.1441–5T(g)(3).

[T.D. 8734, 62 FR 53452, Oct. 14, 1997, as amended by T.D. 8804, 63 FR 72185, 72188, Dec. 31, 1998; 64 FR 73410, Dec. 30, 1999; T.D. 8881, 65 FR 32188, May 22, 2000; 66 FR 18188, Apr. 6, 2001; T.D. 9658, 79 FR 12773, Mar. 6, 2014]

§1.1441–5T Withholding on payments to partnerships, trusts, and estates (temporary).

(a) through (b)(2)(ii) [Reserved] For further guidance, see §1.1441–5(a) through (b)(2)(ii).

(b)(2)(iii) *U.S. complex trusts and U.S. estates.* A U.S. trust that is not a trust described in section 651(a) (see paragraph (b)(2)(ii) of this section) or sections 671 through 679 (see paragraph (b)(2)(iv) of this section) (a U.S. complex trust) is required to withhold under chapter 3 of the Internal Revenue Code (Code) as a withholding agent on the distributable net income includible in the gross income of a foreign beneficiary to the extent the distributable net income consists of an amount subject to withholding (as defined in §1.1441–2(a)) that is, or is required to be, distributed currently. The U.S. complex trust shall withhold when a distribution is made to a foreign beneficiary. The trust may use the same procedures regarding an estimate of the amount subject to withholding as a U.S. simple trust under paragraph (b)(2)(ii) of this section. To the extent an amount subject to withholding is required to be, but is not actually distributed, the U.S. complex trust must withhold on the foreign beneficiary's allocable share at the time the income is required to be reported on Form 1042–S under §1.1461–1(c), without extension. A U.S. estate is required to withhold under chapter 3 of the Code on the distributable net income includible in the gross income of a foreign beneficiary to the extent the distributable net income consists of an amount subject to withholding (as defined in §1.1441–2(a)) that is actually distributed. A U.S. estate may also use the reasonable estimate procedures of paragraph (b)(2)(ii) of this section. However, those procedures apply to an estate that has a taxable year other than a calendar year only if the estate files an amended return on Form 1042 for the calendar year in which the distribution was made and pays the underwithheld tax and interest within 60 days after the close of the taxable year in which the distribution was made.

(iv) and (v) [Reserved] For further guidance, see §1.1441–5 (b)(2)(iv) and (v).

(vi) *Coordination with chapter 4 requirements for U.S. partnerships, trusts, and estates.* To the extent that a U.S. partnership is required to withhold on an amount under chapter 4 with respect to a partner, beneficiary or owner, the partnership, trust, or estate must apply the rules described in §1.1473–1(a)(5) to determine when it must withhold on the amount under chapter 4. In a case in which withholding applies under chapter 4 to such an amount, see §1.1441–3(a)(2) to coordinate with withholding that otherwise applies to such an amount under this paragraph (b).

(c) *Foreign partnerships*—(1) *Determination of payee.* (i) *Payments treated as made to partners.* Except as otherwise provided in paragraph (c)(1)(ii) or (iv) of this section, the payees of a payment to a person that the withholding agent may treat as a nonwithholding foreign partnership under paragraph (c)(3)(i) or (d)(2) of this section are the partners (looking through partners that are foreign intermediaries or flow-through entities) as follows—

(A) and (B) [Reserved] For further guidance, see §1.1441–5(c)(1)(i)(A) and (B).

(C) If the withholding agent can reliably associate a partner's distributive

share of the payment with a qualified intermediary withholding certificate under §1.1441–1(e)(3)(ii), a nonqualified intermediary withholding certificate under §1.1441–1(e)(3)(iii), or a U.S. branch certificate under §1.1441–1(e)(3)(v) (including one provided by a territory financial institution), then the rules of §1.1441–1(b)(2)(v) shall apply to determine who the payee is in the same manner as if the partner's distributive share of the payment had been paid directly to such intermediary or U.S. branch or territory financial institution;

(c)(1)(i)(D) through (c)(1)(iii) [Reserved] For further guidance, see §1.1441–5 (c)(1)(i)(D) through (c)(1)(iii).

(iv) *Coordination with chapter 4 for payments made to foreign partnerships.* A withholding agent that makes a payment of U.S. source FDAP income to a foreign partnership that is a withholdable payment to which withholding under chapter 4 applies must apply the rules described in §1.1473–1(a)(5)(vi) to determine when the payment is treated as made to a partner in the partnership for purposes of chapter 4. In a case in which withholding applies under chapter 4 to a withholdable payment made to a foreign partnership, see §1.1441–3(a)(2) to coordinate with withholding otherwise required under this paragraph (c) with respect to the amount of the payment included in the gross income of a partner. For when a withholding agent may reliably associate a withholdable payment with a chapter 4 withholding rate pool in lieu of obtaining documentation for each payee include in the pool, see §1.1441–1(e)(3)(iv)(C)(*2*) (substituting the term *nonwithholding foreign partnership* for the term *nonqualified intermediary*).

(v) *Examples.* The rules of paragraphs (c)(1)(i) and (ii) of this section are illustrated by the following examples. Each example assumes that all payments are not withholdable payments and thus no withholding applies under chapter 4.

Example 1. FP is a nonwithholding foreign partnership organized in Country X. FP has two partners, FC, a foreign corporation, and USP, a U.S. partnership. USWH, a U.S. withholding agent, makes a payment of U.S. source interest to FP that is not a withholdable payment. FP has provided USWH with a valid nonwithholding foreign partnership certificate, as described in paragraph (c)(3)(iii) of this section, with which it associates a beneficial owner withholding certificate from FC and a Form W–9, ''Request for Taxpayer Identification Number and Certification,'' from USP together with the withholding statement required by paragraph (c)(3)(iv) of this section. USWH can reliably associate the payment of interest with the withholding certificates from FC and USP. Under paragraph (c)(1)(i) of this section, the payees of the interest payment are FC and USP.

Example 2. The facts are the same as in *Example 1,* except that FP1, a nonwithholding foreign partnership, is a partner in FP rather than USP. FP1 has two partners, A and B, both foreign persons. FP provides USWH with a valid nonwithholding foreign partnership certificate, as described in paragraph (c)(3)(iii) of this section, with which it associates a beneficial owner withholding certificate from FC and a nonwithholding foreign partnership certificate from FP1. In addition, foreign beneficial owner withholding certificates from A and B are associated with the nonwithholding foreign partnership withholding certificate from FP1. FP also provides the withholding statement required by paragraph (c)(3)(iv) of this section. USWH can reliably associate the interest payment with the withholding certificates provided by FC, A, and B. Therefore, under paragraph (c)(1)(i) of this section, the payees of the interest payment are FC, A, and B.

Example 3. USWH makes a payment of U.S. source dividends to WFP, a withholding foreign partnership, that is not a withholdable payment. WFP has two partners, FC1 and FC2, both foreign corporations. USWH can reliably associate the payment with a valid withholding foreign partnership withholding certificate from WFP. Therefore, under paragraph (c)(1)(ii)(A) of this section, WFP is the payee of the interest.

Example 4. USWH makes a payment of U.S. source royalties that is not a withholdable payment to FP, a foreign partnership. USWH can reliably associate the royalties with a valid withholding certificate from FP on which FP certifies that the income is effectively connected with the conduct of a trade or business in the United States. Therefore, under paragraph (c)(1)(ii)(B) of this section, FP is the payee of the royalties.

(2) *Withholding foreign partnerships*—(i) *Reliance on claim of withholding foreign partnership status.* A withholding foreign partnership is a foreign partnership that has entered into an agreement with the Internal Revenue Service (IRS), as described in paragraph (c)(2)(ii) of this section, with respect to distributions and guaranteed payments it makes to its partners. A withholding

agent that can reliably associate a payment with a certificate described in paragraph (c)(2)(iv) of this section may treat the person to whom it makes the payment as a withholding foreign partnership for purposes of withholding under chapters 3 and 4 of the Code, information reporting under chapter 61 of the Code, backup withholding under section 3406, and withholding under other provisions of the Code. Furnishing such a certificate is in lieu of transmitting to a withholding agent withholding certificates or other appropriate documentation for its partners. Although the withholding foreign partnership generally will be required to obtain withholding certificates or other appropriate documentation from its partners pursuant to its agreement with the IRS, it will generally not be required to attach such documentation to its withholding foreign partnership withholding certificate to the extent it is permitted to act as a withholding foreign partnership with respect to the payment under its agreement. A foreign partnership may act as a qualified intermediary under § 1.1441–1(e)(5) with respect to payments it makes to persons other than its partners. In addition, the IRS may permit a foreign partnership to act as a qualified intermediary under § 1.1441–1(e)(5)(ii)(D) with respect to its partners in appropriate circumstances.

(ii) *Withholding agreement*. The IRS may, upon request, enter into a withholding agreement with a foreign partnership pursuant to such procedures as the IRS may prescribe in published guidance (see § 601.601(d)(2) of this chapter). Under the withholding agreement, a foreign partnership shall generally be subject to the applicable withholding and reporting provisions applicable to withholding agents (and payors as defined in § 1.6049–4(a) under chapters 3, 4, and 61 of the Code, section 3406, the regulations under those provisions, and other withholding provisions of the Code, except to the extent provided under the agreement. Under the agreement, a foreign partnership may agree to act as an acceptance agent to perform the duties described in § 301.6109–1(d)(3)(iv)(A) of this chapter. For a partnership that receives withholdable payments on behalf of its partners and that is an FFI, the agreement will require the partnership to assume the requirements of a participating FFI, a registered deemed-compliant FFI, or an FFI treated as a deemed-compliant FFI under an applicable IGA that is subject to due diligence and reporting requirements with respect to its U.S. accounts similar to those applicable to a registered deemed-compliant FFI under § 1.1471–5(f)(1). The agreement may specify the manner in which applicable procedures for adjustments for underwithholding and overwithholding, including refund procedures, apply to the withholding foreign partnership and its partners and the extent to which applicable procedures may be modified. In particular, a withholding agreement may allow a withholding foreign partnership to claim refunds of overwithheld amounts on behalf of its customers. In addition, the agreement must specify the manner in which the IRS will verify the partnership's compliance with its agreement, including the requirements for a periodic review of the partnership's compliance with the agreement and the procedures for the partnership to certify to its compliance with the agreement. A withholding foreign partnership must file a return on Form 1042, ''Annual Withholding Tax Return for U.S. Source Income of Foreign Persons,'' and information returns on Form 1042–S, ''Foreign Person's U.S. Source Income Subject to Withholding.'' The withholding foreign partnership agreement may also require a withholding foreign partnership to file a partnership return under section 6031(a) and partner statements under 6031(b), including for each U.S. partner to the extent required in the agreement. Additionally, a partnership that is an FFI will be required to file Form 8966, ''FATCA Report,'' to the extent provided in the agreement.

(iii) *Withholding responsibility*. A withholding foreign partnership must assume primary withholding responsibility under both chapters 3 and 4 of the Code. It is not required to provide information to the withholding agent regarding each partner's distributive share of the payment (including a withholdable payment). The withholding foreign partnership will be responsible for reporting the payments

under §1.1461–1(c), §1.1474–1(d), and chapter 61 of the Code and filing Form 1042 (to the extent required in the agreement). A withholding agent making a payment to a withholding foreign partnership is not required to withhold any amount under chapters 3 and 4 of the Code on the payment unless it has actual knowledge or reason to know that the foreign partnership is not acting as a withholding foreign partnership with respect to the payment or has not withheld to the extent required. The withholding foreign partnership shall withhold the payments under the same procedures and at the same time as prescribed for withholding by a U.S. partnership under paragraph (b)(2) of this section, except that, for purposes of determining the partner's status, the provisions of paragraph (d)(4) of this section shall apply.

(iv) [Reserved] For further guidance, see §1.1441–5(c)(2)(iv).

(A) The name, permanent residence address (as described in §1.1441–1(e)(2)(ii)), the employer identification number of the partnership, the country under the laws of which the partnership is created or governed, the chapter 4 status of the partnership if required for purposes of chapter 4 or if the partnership provides (or will provide) a withholding statement associated with the Form W–8 allocating a payment to a chapter 4 withholding rate pool of U.S. payees under §1.6049–4(c)(4) with respect to its partners, and the GIIN of the partnership (if applicable). If the partnership provides (or will provide) a chapter 4 withholding rate pool of U.S. payees as described in the preceding sentence, the partnership must certify to its chapter 4 status as a participating FFI (including a reporting Model 2 FFI) or registered deemed-compliant FFI (including a reporting Model 1 FFI);

(B) A certification that the partnership is a withholding foreign partnership within the meaning of paragraph (c)(2)(i) of this section, and, for a partnership that is an FFI receiving a withholdable payment, a certification that the partnership is acting as a participating FFI, a registered deemed-compliant FFI, or a nonreporting IGA FFI (as defined in §1.1471–1(b)(83)); and

(C) [Reserved] For further guidance, see §1.1441–5(c)(2)(iv)(C).

(3) *Nonwithholding foreign partnerships*—(i) *Reliance on claim of foreign partnership status.* A withholding agent may treat a person as a nonwithholding foreign partnership if it receives from that person a nonwithholding foreign partnership withholding certificate as described in paragraph (c)(3)(iii) of this section. A withholding agent that does not receive a nonwithholding foreign partnership withholding certificate, or does not receive a valid withholding certificate, from an entity it knows, or has reason to know, is a foreign partnership, must apply the presumption rules of §§1.1441–1(b)(3) and 1.6049–5(d) and paragraphs (d) and (e)(6) of this section. In addition, to the extent a withholding agent cannot, prior to a payment, reliably associate the payment with valid documentation from a payee that is associated with the nonwithholding foreign partnership withholding certificate or has insufficient information to report the payment on Form 1042–S or Form 1099, to the extent reporting is required, the withholding agent must apply the presumption rules. See §1.1441–1(b)(2)(vii)(A) and (b)(2)(vii)(B) for rules regarding reliable association. See, however, §1.1441–1(e)(3)(iv)(C)(*2*) for when a withholding agent may reliably associate a withholdable payment with a chapter 4 withholding rate pool in lieu of obtaining documentation for each payee included in the pool (substituting the term nonwithholding foreign partnership for the term nonqualified intermediary). See also §1.1441–1(e)(3)(iv)(A) for when a withholding agent may reliably associate a payment with a chapter 4 withholding rate pool of U.S. payees. See paragraph (c)(3)(iv) of this section and §1.1441–1(e)(3)(iv) for alternative procedures permitting allocation information to be received after a payment is made.

(ii) *Reliance on claim of reduced withholding by a partnership for its partners.* This paragraph (c)(3)(ii) describes the manner in which a withholding agent may rely on a claim of reduced withholding when making a payment to a nonwithholding foreign partnership. To the extent that a withholding agent

treats a payment to a nonwithholding foreign partnership as a payment to the nonwithholding foreign partnership's partners (whether direct or indirect) in accordance with paragraph (c)(1)(i) of this section, it may rely on a claim for reduced withholding by the partner if, prior to the payment, the withholding agent can reliably associate the payment (within the meaning of § 1.1441–1(b)(2)(vii)) with a valid withholding certificate or other appropriate documentation from the partner that establishes entitlement to a reduced rate of withholding. A withholding certificate or other appropriate documentation that establishes entitlement to a reduced rate of withholding is a beneficial owner withholding certificate described in § 1.1441–1(e)(2)(i), documentary evidence described in § 1.1441–6(c)(3) or (4) or § 1.6049–5(c)(1) (for a partner claiming to be a foreign person and a beneficial owner, determined under the provisions of § 1.1441–1(c)(6)), a Form W–9 described in § 1.1441–1(d) (for a partner claiming to be a U.S. payee), a withholding foreign partnership withholding certificate described in paragraph (c)(2)(iv) of this section, or a withholding statement allocating the payment to a chapter 4 withholding rate pool of U.S. payees. For when the withholding agent can reliably associate the payment with a chapter 4 withholding rate pool, see paragraph (c)(3)(i) of this section. See also § 1.1441–3(a)(2) (coordinating withholding under chapter 3 when withholding under chapter 4 is applied to a payment). Unless a nonwithholding foreign partnership withholding certificate is provided for income claimed to be effectively connected with the conduct of a trade or business in the United States, a claim must be presented for each portion of the payment that represents an item of income includible in the distributive share of a partner as required under paragraph (c)(3)(iii)(C) of this section. When making a claim for several partners, the partnership may present a single nonwithholding foreign partnership withholding certificate to which the partners' certificates or other appropriate documentation are associated. Where the nonwithholding foreign partnership withholding certificate is provided for income claimed to be effectively connected with the conduct of a trade or business in the United States under paragraph (c)(3)(iii)(D) of this section, the claim may be presented without having to identify any partner's distributive share of the payment.

(iii) [Reserved] For further guidance, see § 1.1441–5(c)(3)(iii).

(A) The name, permanent residence address (as described in § 1.1441–1(e)(2)(ii)), the employer identification number of the partnership, if any, the country under the laws of which the partnership is created or governed, and the chapter 4 status of the partnership (for a nonwithholding foreign partnership receiving a withholdable payment or providing a withholding statement associated with the Form W–8 allocating a payment to a chapter 4 withholding rate pool of U.S. payees), and the GIIN of the partnership (if applicable);

(B) through (E) [Reserved] For further guidance, see § 1.1441–5(c)(3)(iii)(B) through (c)(3)(iii)(E).

(iv) *Withholding statement provided by nonwithholding foreign partnership and coordination with chapter 4.* The provisions of § 1.1441–1(e)(3)(iv) (regarding a withholding statement) shall apply to a nonwithholding foreign partnership by substituting the term nonwithholding foreign partnership for the term nonqualified intermediary, including when a nonwithholding foreign partnership may provide to a withholding agent a withholding statement that includes a chapter 4 withholding rate pool in lieu of information with respect to each partner that is a payee of a payment.

(v) *Withholding and reporting by a foreign partnership.* A nonwithholding foreign partnership described in this paragraph (c)(3) that receives an amount subject to withholding (as defined in § 1.1441–2(a)) shall be required to withhold and report such payment under chapter 3 of the Code and the regulations thereunder except as otherwise provided in this paragraph (c)(3)(v). A nonwithholding foreign partnership shall not be required to withhold and report if it has provided a valid nonwithholding foreign partnership withholding certificate, it has provided all

of the information required by paragraph (c)(3)(iv) of this section (withholding statement), and it does not know, and has no reason to know, that another withholding agent failed to withhold the correct amount or failed to report the payment correctly under §1.1461–1(c). A nonwithholding foreign partnership is also not required to withhold and report under this paragraph (c)(3) to the extent that withholding under chapter 4 was applied to a payment that is includible in the gross income of a partner in the partnership. See also §1.1441–3(a)(2) for coordination rules when withholding under chapter 4 has been applied to a withholdable payment. A withholding foreign partnership's obligations to withhold and report shall be determined in accordance with its withholding foreign partnership agreement.

(d)(1) [Reserved] For further guidance, see §1.1441–5(d)(1).

(2) *Determination of partnership status as U.S. or foreign in the absence of documentation*. In the absence of a valid representation of U.S. partnership status in accordance with paragraph (b)(1) of this section or of foreign partnership status in accordance with paragraph (c)(2)(i) or (c)(3)(i) of this section, the withholding agent shall determine the classification of the payee under the presumptions set forth in §1.1441–1(b)(3)(ii). If the withholding agent treats the payee as a partnership under §1.1441–1(b)(3)(ii), the withholding agent shall apply the presumptions set forth in §1.1441–1(b)(3)(iii)(A)(*1*) (applied by substituting the term *partnership* for the term *exempt recipient*) to determine whether to treat the partnership as a U.S. person or foreign person. For rules regarding reliable association with a withholding certificate from a domestic or a foreign partnership, see §1.1441–1(b)(2)(vii).

(3) *Determination of partners' status in the absence of certain documentation*. If a nonwithholding foreign partnership has provided a nonwithholding foreign partnership withholding certificate under paragraph (c)(3)(iii) of this section that would be valid except that the withholding agent cannot reliably associate all or a portion of the payment with valid documentation from a partner of the partnership, then the withholding agent may apply the presumption rule of this paragraph (d)(3) with respect to all or a portion of the payment for which documentation has not been received. See §1.1441–1(b)(2)(vii)(A) and (B) for rules regarding reliable association. The presumption rule of this paragraph (d)(3) also applies to a person that is presumed to be a foreign partnership under the rule of paragraph (d)(2) of this section. Any portion of a payment that the withholding agent cannot treat as reliably associated with valid documentation from a partner may be presumed made to a foreign payee. As a result, any payment of an amount subject to withholding is subject to withholding at a rate of 30 percent. Any payment that is presumed to be made to an undocumented foreign payee must be reported on Form 1042–S. See §1.1461–1(c). For a payment described in this paragraph (d)(3) that is a withholdable payment, see §1.1471–3(f)(5) for the presumption rule for determining the payee's chapter 4 status to determine whether withholding under chapter 4 applies to the payment.

(4) *Determination by a withholding foreign partnership of the status of its partners*. Except as otherwise provided in the agreement described in paragraph (c)(2) of this section, a withholding foreign partnership shall determine whether the partners or some other persons are the payees of the partners' distributive shares of any payment made by a withholding foreign partnership by applying the rules of §1.1441–1(b)(2), paragraph (c)(1) of this section (in the case of a partner that is a foreign partnership), and paragraph (e)(3) of this section (in the case of a partner that is a foreign estate or a foreign trust). Further, the provisions of paragraph (d)(3) of this section shall apply to determine the status of partners and the applicable withholding rates to the extent that, at the time the foreign partnership is required to withhold on a payment, it cannot reliably associate the amount with documentation for any one or more of its partners.

(e)(1) through (e)(3)(ii) [Reserved] For further guidance, see §1.1441–5(e)(1) through (e)(3)(ii).

(iii) *Coordination with chapter 4 for payments made to foreign simple trusts*

and foreign grantor trusts. A withholding agent that makes a payment of U.S. source FDAP income to a foreign simple trust or foreign grantor trust that is a withholdable payment to which withholding under chapter 4 applies must apply the rules described in §1.1473–1(a)(5)(vi) to determine when the payment is treated as made to a beneficiary or owner of the trust for purposes of chapter 4. In a case in which withholding applies under chapter 4 to a withholdable payment made to a foreign simple trust or foreign grantor trust, see §1.1441–3(a)(2) to coordinate withholding otherwise required under this paragraph (e) with respect to the amount of the payment included in the gross income of the payee of the payment. For when a withholding agent may reliably associate a withholdable payment with a chapter 4 withholding rate pool in lieu of obtaining documentation for each payee included in the pool, see §1.1441–1(e)(3)(iv)(C)(*2*) (substituting the term nonwithholding foreign trust for the term nonqualified intermediary).

(4) [Reserved] For further guidance, see §1.1441–5(e)(4).

(5) *Foreign simple trust and foreign grantor trust*—(i) *Reliance on claim of foreign simple trust or foreign grantor trust status.* A withholding agent may treat a person as a foreign simple trust or foreign grantor trust if it receives from that person a foreign simple trust or foreign grantor trust withholding certificate as described in paragraph (e)(5)(iii) of this section. A withholding agent must apply the presumption rules of §§1.1441–1(b)(3) and 1.6049–5(d) and paragraphs (d) and (e)(6) of this section to the extent it cannot, prior to the payment, reliably associate a payment (within the meaning of §1.1441–1(b)(2)(vii)) with a valid foreign simple trust or foreign grantor trust withholding certificate, it cannot reliably determine how much of the payment relates to valid documentation provided by a payee (e.g., a person that is not itself a nonqualified intermediary, flow-through entity, or U.S. branch) associated with the foreign simple trust or foreign grantor trust withholding certificate, or it does not have sufficient information to report the payment on Form 1042–S or Form 1099, if reporting is required. See §1.1441–1(b)(2)(vii)(A) and (b)(2)(vii)(B). See, however, §1.1441–1(e)(3)(iv)(C)(*2*) for when a withholding agent may reliably associate a withholdable payment with a chapter 4 withholding rate pool in lieu of obtaining documentation for each payee included in a pool (substituting the term nonwithholding foreign trust for the term nonqualified intermediary). See also §1.1441–1(e)(3)(iv)(A) for when a withholding agent may reliably associate a payment with a chapter 4 withholding rate pool of U.S. payees.

(ii) *Reliance on claim of reduced withholding by a foreign simple trust or foreign grantor trust for its beneficiaries or owners.* This paragraph (e)(5)(ii) describes the manner in which a withholding agent may rely on a claim of reduced withholding when making a payment to a foreign simple trust or foreign grantor trust. To the extent that a withholding agent treats a payment to a foreign simple trust or foreign grantor trust as a payment to payees other than the trust in accordance with paragraph (e)(3)(i) of this section, it may rely on a claim for reduced withholding by a beneficiary or owner if, prior to the payment, the withholding agent can reliably associate the payment (within the meaning of §1.1441–1(b)(2)(vii)) with a valid withholding certificate or other appropriate documentation from a payee or beneficial owner that establishes entitlement to a reduced rate of withholding. A withholding certificate or other appropriate documentation that establishes entitlement to a reduced rate of withholding is a beneficial owner withholding certificate described in §1.1441–1(e)(2)(i) or documentary evidence described in §1.1441–6(c)(3) or (c)(4) or in §1.6049–5(c)(1) (for a beneficiary or owner claiming to be a foreign person and a beneficial owner, determined under the provisions of §1.1441–1(c)(6)), a Form W–9 described in §1.1441–1(d) (for a beneficiary or owner claiming to be a U.S. payee), a withholding foreign partnership withholding certificate described in paragraph (c)(2)(iv) of this section, or a withholding statement allocating the payment to a chapter 4 withholding rate pool of U.S. payees.

For when the withholding agent can reliably associate the payment with a chapter 4 withholding rate pool, see paragraph (c)(3)(i) of this section. See also §1.1441–3(a)(2) (coordinating withholding under chapter 3 when withholding under chapter 4 is applied to a withholdable payment). Unless a foreign simple trust or foreign grantor trust withholding certificate is provided for income treated as income effectively connected with the conduct of a trade or business in the United States, a claim must be presented for each payee's portion of the payment. When making a claim for several payees, the trust may present a single foreign simple trust or foreign grantor trust withholding certificate with which the payees' certificates or other appropriate documentation are associated. Where the foreign simple trust or foreign grantor trust withholding certificate is provided for income that is treated as effectively connected with the conduct of a trade or business in the United States under paragraph (e)(5)(iii)(D) of this section, the claim may be presented without having to identify any beneficiary's or grantor's distributive share of the payment.

(iii) [Reserved] For further guidance, see §1.1441–5(e)(5)(iii).

(A) The name, permanent residence address (as described in §1.1441–1(e)(2)(ii)), the employer identification number, if required, of the trust, the country under the laws of which the trust is created, the chapter 4 status of the trust if required for purposes of chapter 4 or if the trust provides (or will provide) a withholding statement associated with the Form W–8 allocating a payment to a chapter 4 withholding rate pool of U.S. payees under §1.6049–4(c)(4) with respect to the nonwithholding foreign trust's owners and beneficiaries, and the GIIN of the trust (if applicable). If a nonwithholding foreign trust provides (or will provide) a chapter 4 withholding rate pool of U.S. payees as described in the preceding sentence, the trust must certify to its chapter 4 status as a participating FFI (including a reporting Model 2 FFI) or registered deemed-compliant FFI (including a reporting Model 1 FFI);

(B) through (E) [Reserved] For further guidance, see §1.1441–5 (e)(5)(iii)(B) through (e)(5)(iii)(E).

(iv) *Withholding statement provided by a foreign simple trust or foreign grantor trust.* The provisions of §1.1441–1(e)(3)(iv) (regarding a withholding statement) shall apply to a foreign simple trust or foreign grantor trust by substituting the term foreign simple trust or foreign grantor trust for the term nonqualified intermediary, including when a withholding statement provided by a foreign simple trust or foreign grantor trust may include a chapter 4 withholding rate pool in lieu of information with respect to each owner or beneficiary that is a payee of a payment.

(v) *Withholding foreign trusts.* The IRS may enter an agreement with a foreign trust to treat the trust or estate as a withholding foreign trust. Such an agreement shall generally follow the same principles as an agreement with a withholding foreign partnership under paragraph (c)(2)(ii) of this section. A withholding agent may treat a payment to a withholding foreign trust in the same manner the withholding agent would treat a payment (including a withholdable payment) to a withholding foreign partnership. The IRS may also enter an agreement to treat a trust as a qualified intermediary in appropriate circumstances. See §1.1441–1(e)(5)(ii)(D). For a withholding foreign trust that is an FFI and that receives withholdable payments on behalf of its owners or beneficiaries, the agreement will require the withholding foreign trust to assume the requirements of either a participating FFI, registered deemed-compliant FFI, or an FFI treated as a deemed-compliant FFI under an applicable IGA that is subject to due diligence and reporting requirements with respect to its U.S. accounts similar to those applicable to a registered deemed-compliant FFI under §1.1471–5(f)(1).

(6)(i) [Reserved] For further guidance, see §1.1441–5(e)(6)(i).

(ii) *Determination of status as U.S. or foreign trust or estate in the absence of documentation.* In the absence of valid documentation that establishes the U.S. status of a trust or estate under paragraph (b)(1) of this section and of

documentation that establishes the foreign status of a trust or estate under paragraph (e)(4) or (e)(5)(iii) of this section, the withholding agent shall determine the classification of the payee based upon the presumptions set forth in §1.1441–1(b)(3)(ii). If, based upon those presumptions, the withholding agent classifies the payee as a trust or estate, the withholding agent shall apply the presumptions set forth in §1.1441–1(b)(3)(iii)(A)(*1*) (applied by substituting the term *trust* for the term *exempt recipient*) to determine whether the trust or estate is a U.S. person or foreign person. An undocumented payee presumed to be a foreign trust shall be presumed to be a foreign complex trust. If a withholding agent has documentary evidence that establishes that an entity is a foreign trust, but the withholding agent cannot determine whether the foreign trust is a complex trust, a simple trust, or foreign grantor trust, the withholding agent shall presume that the trust is a foreign complex trust. Notwithstanding the preceding sentence, in the case of a foreign trust with a settlor that is a U.S. person for which a withholding agent has both a U.S. address and TIN, the withholding agent shall presume that the trust is a grantor trust when it cannot determine the status of the trust as a simple trust, complex trust, or grantor trust. See §1.1471–3(f)(4) and (5) to determine the status of the payee for purposes of chapter 4.

(iii) [Reserved] For further guidance, see §1.1441–5(e)(6)(iii).

(f) *Failure to receive withholding certificate timely or to act in accordance with applicable presumptions.* See applicable procedures described in §1.1441–1(b)(7) in the event the withholding agent does not hold an appropriate withholding certificate or other appropriate documentation at the time of payment or fails to rely on the presumptions set forth in §1.1441–1(b)(3) or in paragraph (d) or (e) of this section. For a payment that is a withholdable payment, see §1.1471–3(f) for the presumption rule for determining the payee's chapter 4 status.

(g)(1) and (2) [Reserved] For further guidance, see §1.1441–5(g)(1) and (2).

(g)(3) *Effective/applicability date.* This section applies to payments made after June 30, 2014. (For payments made after December 31, 2000, and before July 1, 2014, see this section as in effect and contained in 26 CFR Part 1, as revised April 1, 2013.)

(h) *Expiration date.* The applicability of this section expires on February 28, 2017.

[T.D. 9658, 79 FR 12775, Mar. 6, 2014; 79 FR 37185, July 1, 2014]

§1.1441–6 Claim of reduced withholding under an income tax treaty.

(a) [Reserved] For further guidance, see §1.1441–6T(a).

(b)(1) [Reserved] For further guidance, see §1.1441–6T(b)(1).

(2)(i) [Reserved] For further guidance, see §1.1441–6T(b)(2)(i).

(ii) *Certification by qualified intermediary.* Notwithstanding paragraph (b)(2)(i) of this section, a foreign entity that is fiscally transparent, as defined in the regulations under section 894, that is also a qualified intermediary for purposes of claiming a reduced rate of withholding under an income tax treaty for its interest holders (who are deriving the income paid to the entity as residents of an applicable treaty jurisdiction) may furnish a single qualified intermediary withholding certificate, as described in §1.1441–1(e)(3)(ii), for amounts for which it claims a reduced rate of withholding under an income tax treaty on behalf of its interest holders.

(iii) *Dual treatment.* Under paragraph (b)(2)(i) of this section, a withholding agent may make a payment to a foreign entity that is simultaneously claiming to be the beneficial owner of a portion of the income (whether or not it is also claiming a reduced rate of tax on its own behalf) and a reduced rate on behalf of persons in their capacity as interest holders in the entity with respect to the same, or a different, portion of the income. If the same portion of a payment may be reliably associated with both the entity's claim and an interest holder's claim, the withholding agent may choose to reject both claims and request new documentation and information allocating the payment among the beneficial owners of the payment or the withholding

agent may choose which claim to apply. If the entity and the interest holder's claims are reliably associated with separate portions of the payment, the withholding agent may, at its option, accept such dual claims based on withholding certificates or other appropriate documentation furnished by the entity and its interest holders with respect to their respective shares of the payment even though this will result in the withholding agent treating the entity differently with respect to different portions of the same payment. Alternatively, the withholding agent may choose to apply only the claim made by the entity, provided the entity may be treated as a beneficial owner of the income. If the withholding agent does not accept claims for a reduced rate of withholding presented by any one or more of the interest holders, or by the entity, any interest holder or the entity may subsequently claim a refund or credit of any amount so withheld to the extent the interest holder's or entity's share of such withholding exceeds the amount of tax due.

(iv) [Reserved] For further guidance, see § 1.1441–6T(b)(2)(iv).

(3) *Certified TIN.* The IRS may issue guidance requiring a foreign person claiming treaty benefits and for whom a TIN is required to establish with the IRS, at the time the TIN is requested or after the TIN is issued, that the person is a resident in a treaty country and meets other conditions (such as limitation on benefits provisions) of the treaty. See § 601.601(d)(2) of this chapter.

(4) *Claim of benefits under an income tax treaty by a U.S. person.* In certain cases, a U.S. person may claim the benefit of an income tax treaty. For example, under certain treaties, a U.S. citizen residing in the treaty country may claim a reduced rate of U.S. tax on certain amounts representing a pension or an annuity from U.S. sources. Claims of treaty benefits by a U.S. person may be made by furnishing a Form W–9 to the withholding agent or such other form as the IRS may prescribe in published guidance (see § 601.601(d)(2) of this chapter).

(c)(1) [Reserved] For further guidance, see § 1.1441–6T(c)(1).

(2) *Income to which special rules apply.* The income to which paragraph (c)(1) of this section applies is dividends and interest from stocks and debt obligations that are actively traded, dividends from any redeemable security issued by an investment company registered under the Investment Company Act of 1940 (15 U.S.C. 80a–1), dividends, interest, or royalties from units of beneficial interest in a unit investment trust that are (or were upon issuance) publicly offered and are registered with the Securities and Exchange Commission under the Securities Act of 1933 (15 U.S.C. 77a), and amounts paid with respect to loans of securities described in this paragraph (c)(2). With respect to a dividend equivalent described in section 871(m) and the regulations thereunder, this paragraph (c)(2) applies to the extent that the underlying security described in section 871(m) and the regulations thereunder satisfies the requirements of this paragraph (c)(2). For purposes of this paragraph (c)(2), a stock or debt obligation is actively traded if it is actively traded within the meaning of section 1092(d) and § 1.1092(d)–1 when documentation is provided.

(3) *Certificate of residence.* A certificate of residence referred to in paragraph (c)(1) of this section is a certification issued by an appropriate tax official of the treaty country of which the taxpayer claims to be a resident that the taxpayer has filed its most recent income tax return as a resident of that country (within the meaning of the applicable tax treaty). The certificate of residence must have been issued by such official within three years prior to its being presented to the withholding agent, or such other period as the IRS may prescribe in published guidance (see § 601.601(d)(2) of this chapter). See § 1.1441–1(e)(4)(ii)(A) for the period during which a withholding agent may rely on a certificate of residence. The competent authorities may agree to a different procedure for certifying residence, in which case such procedure shall govern for payments made to a person claiming to be a resident of the country with which such an agreement is in effect.

(4) *Documentary evidence establishing residence in the treaty country*—(i) *Individuals*. For an individual, the documentary evidence referred to in paragraph (c)(1) of this section is any documentation that includes the individuals name, address, and photograph, is an official document issued by an authorized governmental body (*i.e.*, a government or agency thereof, or a municipality), and has been issued no more than three years prior to presentation to the withholding agent. A document older than three years may be relied upon as proof of residence only if it is accompanied by additional evidence of the person's residence in the treaty country (e.g., a bank statement, utility bills, or medical bills). Documentary evidence must be in the form of original documents or certified copies thereof.

(ii) *Persons other than individuals*. For a person other than an individual, the documentary evidence referred to in paragraph (c)(1) of this section is any documentation that includes the name of the entity and the address of its principal office in the treaty country, and is an official document issued by an authorized governmental body (e.g., a government or agency thereof, or a municipality).

(5) *Statements regarding entitlement to treaty benefits*—(i) *Statement regarding conditions under a limitation on benefits provision*. In addition to the documentary evidence described in (c)(4)(ii) of this section, a taxpayer that is not an individual must provide a statement that it meets one or more of the conditions set forth in the limitation on benefits article (if any, or in a similar provision) contained in the applicable tax treaty.

(ii) *Statement regarding whether the taxpayer derives the income*. A taxpayer that is not an individual must also provide, in addition to the documentary evidence and the statement described in paragraph (c)(5)(i) of this section, a statement that any income for which it intends to claim benefits under an applicable income tax treaty is income that will properly be treated as derived by itself as a resident of the applicable treaty jurisdiction within the meaning of section 894 and the regulations thereunder. This requirement does not apply if the taxpayer furnishes a certificate of residence that certifies that fact.

(d) *Joint owners*. In the case of a payment to joint owners, each owner must furnish a withholding certificate or, if applicable, documentary evidence or a certificate of residence. The applicable rate of withholding on a payment of income to joint owners shall be the highest applicable rate.

(e) *Competent authority*. The procedures described in this section may be modified to the extent the U.S. competent authority may agree with the competent authority of a country with which the United States has an income tax treaty in effect.

(f) *Failure to receive withholding certificate timely*. See applicable procedures described in § 1.1441–1(b)(7) in the event the withholding agent does not hold an appropriate withholding certificate or other appropriate documentation at the time of payment.

(g) *Special taxpayer identifying number rule for certain foreign individuals claiming treaty benefits*—(1) *General rule*. Except as provided in paragraph (c) or (g)(2) of this section, for purposes of paragraph (b)(1) of this section, a withholding agent may not rely on a beneficial owner withholding certificate, described in paragraph (b)(1) of this section, that does not include the beneficial owner's taxpayer identifying number (TIN).

(2) *Special rule*. For purposes of satisfying the TIN requirement of paragraph (b)(1) of this section, a withholding agent may rely on a beneficial owner withholding certificate, described in such paragraph, without regard to the requirement that the withholding certificate include the beneficial owner's TIN, if—

(i) A withholding agent, who is also an acceptance agent, as defined in § 301.6109–1(d)(3)(iv) of this chapter (the payor), has entered into an acceptance agreement that permits the acceptance agent to request an individual taxpayer identification number (ITIN) on an expedited basis because of the circumstances of payment or unexpected nature of payments required to be made by the payor;

(ii) The payor was required to make an unexpected payment to the beneficial owner who is a foreign individual;

(iii) An ITIN for the beneficial owner cannot be received by the payor from the Internal Revenue Service (IRS) because the IRS is not issuing ITINs at the time of payment or any time prior to the time of payment when the payor has knowledge of the unexpected payment;

(iv) The unexpected payment to the beneficial owner could not be reasonably delayed to permit the payor to obtain an ITIN for the beneficial owner on an expedited basis; and

(v) The payor satisfies the provisions of paragraph (g)(3) of this section.

(3) *Requirement that an ITIN be requested during the first business day following payment.* The payor must submit a beneficial owner payee application for an ITIN (Form W–7 ''Application for IRS Individual Taxpayer Identification Number'') that complies with the requirements of §301.6109–1(d)(3)(ii) of this chapter, and also the certification described in §301.6109–1(d)(3)(iv)(A)(*4*) of this chapter, to the IRS during the first business day after payment is made.

(4) *Definition of unexpected payment.* For purposes of this section, an *unexpected payment* is a payment that, because of the nature of the payment or the circumstances in which it is made, could not reasonably have been anticipated by the payor or beneficial owner during a time when the payor or beneficial owner could obtain an ITIN from the IRS. For purposes of this paragraph (g)(4), a payor or beneficial owner will not lack the requisite knowledge of the forthcoming payment solely because the amount of the payment is not fixed.

(5) *Examples.* The rules of this paragraph (g) are illustrated by the following examples:

Example 1. G, a citizen and resident of Country Y, a country with which the United States has an income tax treaty that exempts U.S. source gambling winnings from U.S. tax, is visiting the United States for the first time. During his visit, G visits Casino B, a casino that has entered into a special acceptance agent agreement with the IRS that permits Casino B to request an ITIN on an expedited basis. During that visit, on a Sunday, G wins $5000 in slot machine play at Casino B and requests immediate payment from Casino B. ITINs are not available from the IRS on Sunday and would not again be available until Monday. G, who does not have an individual taxpayer identification number, furnishes a beneficial owner withholding certificate, described in §1.1441–1(e)(2), to the Casino upon winning at the slot machine. The beneficial owner withholding certificate represents that G is a resident of Country Y (within the meaning of the U.S.-Y tax treaty) and meets all applicable requirements for claiming benefits under the U.S.-Y tax treaty. The beneficial owner withholding certificate does not, however, contain an ITIN for G. On the following Monday, Casino B faxes a completed Form W–7, including the required certification, for G, to the IRS for an expedited ITIN. Pursuant to paragraph (b) and (g)(2) of this section, absent actual knowledge or reason to know otherwise, Casino B, may rely on the documentation furnished by G at the time of payment and pay the $5000 to G without withholding U.S. tax based on the treaty exemption.

Example 2. The facts are the same as *Example 1,* except G visits Casino B on Monday. G requests payment Monday afternoon. In order to pay the winnings to G without withholding the 30 percent tax, Casino B must apply for and obtain an ITIN for G because an expedited ITIN is available from the IRS at the time of the $5000 payment to G.

Example 3. The facts are the same as *Example 1,* except G requests payment fifteen minutes before the time when the IRS begins issuing ITINs. Under these facts, it would be reasonable for Casino B to delay payment to G. Therefore, Casino B must apply for and obtain an ITIN for G if G wishes to claim an exemption from U.S. withholding tax under the U.S.-Y tax treaty at the time of payment.

Example 4. P, a citizen and resident of Country Z, is a lawyer and a well-known expert on real estate transactions. P is scheduled to attend a three-day seminar on complex real estate transactions, as a participant, at University U, a U.S. university, beginning on a Saturday and ending on the following Monday, which is a holiday. University U has entered into a special acceptance agent agreement with the IRS that permits University U to request an ITIN on an expedited basis. Country Z is a country with which the United States has an income tax treaty that exempts certain income earned from the performance of independent personal services from U.S. tax. It is P's first visit to the United States. On Saturday, prior to the start of the seminar, Professor Q, one of the lecturers at the seminar, cancels his lecture. That same day the Dean of

University U offers P $5000, to replace Professor Q at the seminar, payable at the conclusion of the seminar on Monday. P agrees. P gives her lecture Sunday afternoon. ITINs are not available from the IRS on that Saturday, Sunday, or Monday. After the seminar ends on Monday, P, who does not have an ITIN, requests payment for her teaching. P furnishes a beneficial owner withholding certificate, described in §1.1441–1(e)(2), to University U that represents that P is a resident of Country Z (within the meaning of the U.S.-Z tax treaty) and meets all applicable requirements for claiming benefits under the U.S.-Z tax treaty. The beneficial owner withholding certificate does not, however, contain an ITIN for P. On Tuesday, University U faxes a completed Form W–7, including the required certification, for P, to the IRS for an expedited ITIN. Pursuant to paragraph (b) and (g)(2) of this section, absent actual knowledge or reason to know otherwise, University U may rely on the documentation furnished by P and pay $5000 to P without withholding U.S. tax based on the treaty exemption.

(h) *Dividend equivalents*. The rate of withholding on a dividend equivalent may be reduced to the extent provided under an income tax treaty in effect between the United States and a foreign country. For this purpose, a dividend equivalent as described in section 871(m) and the regulations thereunder is treated as a dividend from sources within the United States. To receive a reduced rate of withholding with respect to a dividend equivalent, a foreign person must satisfy the other requirements described in this section.

(i) *Effective/applicability dates*—(1) *General rule*. This section applies to payments made after December 31, 2000, except that—

(i) Paragraph (g) of this section applies to payments made after December 31, 2001, and

(ii) Paragraph (h) of this section applies to payments made on or after December 5, 2013.

(2) *Transition rules*. For purposes of this section, the validity of a Form 1001 or 8233 that was valid on January 1, 1998, under the regulations in effect prior to January 1, 2001 (see 26 CFR parts 1 and 35a, revised April 1, 1999) and expired, or will expire, at any time during 1998, is extended until December 31, 1998. The validity of a Form 1001 or 8233 that is valid on or after January 1, 1999, remains valid until its validity expires under the regulations in effect prior to January 1, 2001 (see 26 CFR parts 1 and 35a, revised April 1, 1999) but in no event will such a form remain valid after December 31, 2000. The rule in this paragraph (h)(2), however, does not apply to extend the validity period of a Form 1001 or 8233 that expires solely by reason of changes in the circumstances of the person whose name is on the certificate or in interpretation of the law under the regulations under §1.894–1T(d). Notwithstanding the first three sentences of this paragraph (h)(2), a withholding agent may choose to not take advantage of the transition rule in this paragraph (h)(2) with respect to one or more withholding certificates valid under the regulations in effect prior to January 1, 2001 (see 26 CFR parts 1 and 35a, revised April 1, 1999) and, therefore, to require withholding certificates conforming to the requirements described in this section (new withholding certificates). For purposes of this section, a new withholding certificate is deemed to satisfy the documentation requirement under the regulations in effect prior to January 1, 2001 (see 26 CFR parts 1 and 35a, revised April 1, 1999). Further, a new withholding certificate remains valid for the period specified in §1.1441–1(e)(4)(ii), regardless of when the certificate is obtained.

(3) [Reserved] For further guidance, see §1.1441–6T(i)(3).

[T.D. 8734, 62 FR 53458, Oct. 14, 1997, as amended by T.D. 8804, 63 FR 72185, 72188, Dec. 31, 1998; T.D. 8856, 64 FR 73410, Dec. 30, 1999; 65 FR 16320, Mar. 28, 2000; T.D. 8881, 65 FR 32194, May 22, 2000; T.D. 8977, 67 FR 2328, Jan. 17, 2002; T.D. 9023, 67 FR 70312, Nov. 22, 2002; T.D. 9253, 71 FR 13006, Mar. 14, 2006; 71 FR 25748, May 2, 2006; T.D. 9648, 78 FR 73082, Dec. 5, 2013; T.D. 9658, 79 FR 12773, Mar. 6, 2014]

§1.1441–6T Claim of reduced withholding under an income tax treaty (temporary).

(a) *In general*. The rate of withholding on a payment of income subject to withholding may be reduced to the extent provided under an income tax treaty in effect between the United States and a foreign country. Most benefits under income tax treaties are to foreign persons who reside in the treaty country. In some cases, benefits are available under an income tax treaty to U.S. citizens or U.S. residents or

to residents of a third country. See paragraph (b)(5) of this section for claims of benefits by U.S. persons. If the requirements of this section are met, the amount withheld from the payment may be reduced at source to account for the treaty benefit. See, however, §1.1471–2(a) and §1.1472–1(b) for when withholding at source on a withholdable payment may not be reduced to account for a treaty benefit and the beneficial owner of the payment may need to file a claim for refund to obtain a refund for the overwithheld amount of tax. See also §1.1441–4(b)(2) for rules regarding claims of a reduced rate of withholding under an income tax treaty in the case of compensation from personal services and §1.1441–4(c)(1) for rules regarding claims of a reduced rate of withholding under an income tax treaty in the case of scholarship and fellowship income.

(b) *Reliance on claim of reduced withholding under an income tax treaty*—(1) *In general*. The withholding imposed under section 1441, 1442, or 1443 on any payment to a foreign person is eligible for reduction under the terms of an income tax treaty only to the extent that such payment is treated as derived by a resident of an applicable treaty jurisdiction, such resident is a beneficial owner, and all other requirements for benefits under the treaty are satisfied. See section 894 and the regulations under section 894 to determine whether a resident of a treaty country derives the income. Absent actual knowledge or reason to know otherwise, a withholding agent may rely on a claim that a beneficial owner is entitled to a reduced rate of withholding based upon an income tax treaty if, prior to the payment, the withholding agent can reliably associate the payment with a beneficial owner withholding certificate, as described in §1.1441–1(e)(2), that contains the information necessary to support the claim, or, in the case of a payment of income described in paragraph (c)(2) of this section made outside the United States with respect to an offshore obligation, documentary evidence described in paragraphs (c)(3), (c)(4), and (c)(5) of this section. See §1.6049–5(e) for the definition of payments made outside the United States and §1.6049–5(c)(1) for the definition of an offshore obligation. For purposes of this paragraph (b)(1), a beneficial owner withholding certificate described in §1.1441–1(e)(2)(i) contains information necessary to support the claim for a treaty benefit only if it includes the beneficial owner's taxpayer identifying number (except as otherwise provided in paragraph (c)(1) and (g) of this section, or the beneficial owner provides its foreign tax identifying number issued by its country of residence and such country has with the United States an income tax treaty or information exchange agreement in effect) and the representations that the beneficial owner derives the income under section 894 and the regulations under section 894, if required, and meets the limitation on benefits provisions of the treaty, if any. For claims for treaty benefits for scholarship and fellowship income, the beneficial owner withholding certificate must contain the beneficial owner's U.S. taxpayer identifying number (not a foreign taxpayer identifying number). The withholding certificate must also contain any other representations required by this section and any other information, certifications, or statements as may be required by the form or accompanying instructions in addition to, or in place of, the information and certifications described in this section. Absent actual knowledge or reason to know that the claims are incorrect (applying the standards of knowledge in §1.1441–7(b)), a withholding agent may rely on the claims made on a withholding certificate or on documentary evidence. A withholding agent may also rely on the information contained in a withholding statement provided under §§1.1441–1(e)(3)(iv) and 1.1441–5(c)(3)(iv) and (e)(5)(iv) to determine whether the appropriate statements regarding section 894 and limitation on benefits have been provided in connection with documentary evidence. The Internal Revenue Service (IRS) may apply the provisions of §1.1441–1(e)(1)(ii)(B) to notify the withholding agent that the certificate cannot be relied upon to grant benefits under an income tax treaty. See §1.1441–1(e)(4)(viii) regarding reliance on a withholding certificate by a withholding agent. The provisions of §1.1441–1(b)(3)(iv) dealing with a 90-day

grace period shall apply for purposes of this section.

(2) *Payment to fiscally transparent entity*—(i) *In general.* If the person claiming a reduced rate of withholding under an income tax treaty is an interest holder of an entity that is considered to be fiscally transparent (as defined in the regulations under section 894) by the interest holder's jurisdiction with respect to an item of income, then, with respect to such income derived by that person through the entity, the entity shall be treated as a flow-through entity and may provide a flow-through withholding certificate with which the withholding certificate or other documentary evidence of the interest holder that supports the claim for treaty benefits is associated. In the case of a payment that is a withholdable payment, see, however, §1.1471–3(c) for determining the payee of the payment and §§1.1471–2(a) and 1472–1(b) for when withholding at source may apply to the payment based on the status of the payee notwithstanding a claim for treaty benefits made under this paragraph (b)(2) by an interest holder in the payee. In such a case, the interest holder may file a claim for refund of the overwithheld amount of tax. For purposes of this paragraph (b)(2)(i), interest holders do not include any direct or indirect interest holders that are themselves treated as fiscally transparent entities with respect to that income by the interest holder's jurisdiction. See §1.1441–1(c)(23) and (e)(3)(i) for the definition of flow-through entity and flow-through withholding certificate. The entity may provide a beneficial owner withholding certificate, or beneficial owner documentation, with respect to any remaining portion of the income to the extent the entity is receiving income and is not treated as fiscally transparent by its own jurisdiction. Further, the entity may claim a reduced rate of withholding with respect to the portion of a payment for which it is not treated as fiscally transparent if it meets all the requirements to make such a claim and, in the case of treaty benefits, it provides the documentation required by paragraph (b)(1) of this section. If dual claims, as described in paragraph (b)(2)(iii) of this section, are made, multiple withholding certificates may have to be furnished. Multiple withholding certificates may also have to be furnished if the entity receives income for which a reduction of withholding is claimed under a provision of the Internal Revenue Code (e.g., portfolio interest) and income for which a reduction of withholding is claimed under an income tax treaty.

(ii) and (iii) [Reserved] For further guidance, see §1.1441–6(b)(2)(ii) and (iii).

(iv) *Examples.* The following examples illustrate the rules of paragraph (b)(2) of this section. Each of the following examples describes a payment of U.S. source royalties, which are not withholdable payments under chapter 4. See §1.1473–1(a)(4)(iii) (describing nonfinancial payments that are not treated as withholdable payments). Thus, withholding under chapter 4 shall not apply with respect to the U.S. source royalties in any of the following examples:

Example 1. (i) *Facts.* Entity E is a business organization formed under the laws of country Y. Country Y has an income tax treaty with the United States. The treaty contains a limitation on benefits provision. E receives U.S. source royalties from withholding agent W and claims a reduced rate of withholding under the U.S.-Y tax treaty on its own behalf (rather than on behalf of its interest holders). E furnishes a beneficial owner withholding certificate described in paragraph (b)(1) of this section that represents that E is a resident of country Y (within the meaning of the U.S.-Y tax treaty), is the beneficial owner of the income, derives the income under section 894 and the regulations under section 894, and is not precluded from claiming benefits by the treaty's limitation on benefits provision.

(ii) *Analysis.* Absent actual knowledge or reason to know otherwise, W may rely on the representations made by E to apply a reduced rate of withholding.

Example 2. (i) *Facts.* The facts are the same as under *Example 1*, except that one of E's interest holders, H, is an entity organized in country Z. The U.S.-Z tax treaty reduces the rate on royalties to zero whereas the rate on royalties under the U.S.-Y tax treaty applicable to E is 5%. H is not fiscally transparent under country Z's tax law with respect to such income. H furnishes a beneficial owner withholding certificate to E that represents that H derives, within the meaning of section 894 and the regulations under section 894, its share of the royalty income paid to E as a resident of country Z, is the beneficial owner of the royalty income,

and is not precluded from claiming treaty benefits by virtue of the limitation on benefits provision in the U.S.-Z treaty. E furnishes to W a flow-through withholding certificate described in §1.1441–1(e)(3)(i) to which it attaches H's beneficial owner withholding certificate and a withholding statement for the portion of the payment that H claims as its distributive share of the royalty income. E also furnishes to W a beneficial owner withholding certificate for itself for the portion of the payment that H does not claim as its distributive share.

(ii) *Analysis.* Absent actual knowledge or reason to know otherwise, W may rely on the documentation furnished by E to treat the royalty payment to a single foreign entity (E) as derived by different residents of tax treaty countries as a result of the claims presented under different treaties. W may, at its option, grant dual treatment, that is, a reduced rate of zero percent under the U.S.-Z treaty on the portion of the royalty payment that H claims to derive as a resident of country Z and a reduced rate of 5% under the U.S.-Y treaty for the balance. However, under paragraph (b)(2)(iii) of this section, W may, at its option, treat E as the only relevant person deriving the royalty and grant benefits under the U.S.-Y treaty only.

Example 3. (i) *Facts.* E is a business organization formed under the laws of country X. Country X has an income tax treaty with the United States. E has two interest holders, H1, organized in country Y, and H2, organized in country Z. E receives from W, a U.S. withholding agent, a payment of U.S. source royalties and interest, with respect to an obligation issued before July 1, 2014, that is eligible for the portfolio interest exception under sections 871(h) and 881(c), provided W receives the appropriate beneficial owner statement required under section 871(h)(5). E is classified as a corporation under U.S. tax law principles. Country X, E's country of organization, treats E as an entity that is not fiscally transparent with respect to items of income under the regulations under section 894. Under the U.S.-X income tax treaty, royalties are subject to a 5% rate of withholding. Country Y, H1's country of organization, treats E as fiscally transparent with respect to items of income under section 894 and H1 as not fiscally transparent with respect to items of income. Under the country Y-U.S. income tax treaty, royalties are exempt from U.S. tax. Country Z, H2's country of organization, treats E as not fiscally transparent under section 894 with respect to items of income. E provides W with a flow-through beneficial owner withholding certificate with which it associates a beneficial owner withholding certificate from H1. H1's withholding certificate states that H1 is a resident of country Y, derives the royalty income under section 894, meets the applicable limitations on benefits provisions of the U.S.-Y treaty, and is the beneficial owner of the income. The withholding statement attached to E's flow-through withholding certificate allocates one-half of the royalty payment to H1. E also provides W with a beneficial owner withholding certificate for the interest income and the remaining one-half of the royalty income. The withholding certificate states that E is a resident of country X, derives the royalty income under section 894, meets the limitation on benefits provisions of the U.S.-X treaty, and is the beneficial owner of the income.

(ii) *Analysis.* Absent actual knowledge or reason to know that the claims are incorrect, W may treat one-half of the royalty derived by E as subject to a 5% withholding rate and one-half of the royalty as derived by H1 and subject to no withholding. Further, it may treat all of the interest as being paid to E and as qualifying for the portfolio interest exception. W can, at its option, treat the entire royalty as paid to E and subject it to withholding at a 5% rate of withholding. In that case, H1 would be entitled to claim a refund with respect to its one-half of the royalty.

(3) and (4) [Reserved] For further guidance, see §1.1441–6(b)(3) and (4).

(c) *Exemption from requirement to furnish a taxpayer identifying number and special documentary evidence rules for certain income*—(1) *General rule.* In the case of income described in paragraph (c)(2) of this section, a withholding agent may rely on a beneficial owner withholding certificate described in paragraph (b)(1) of this section without regard to the requirement that the withholding certificate include the beneficial owner's taxpayer identifying number. In the case of a payment of income not described in paragraph (c)(2) of this section, a withholding agent may rely on a withholding certificate that includes the beneficial owner's foreign taxpayer identifying number described in paragraph (b)(1) of this section instead of the beneficial owner's taxpayer identifying number. In the case of payments of income described in paragraph (c)(2) of this section made outside the United States (as defined in §1.6049–5(e)) with respect to an offshore obligation (as defined in §1.6049–5(c)(1)), a withholding agent may, as an alternative to a withholding certificate described in paragraph (b)(1) of this section, rely on a certificate of residence described in

paragraph (c)(3) of this section or documentary evidence described in paragraph (c)(4) of this section, relating to the beneficial owner, that the withholding agent has reviewed and maintains in its records in accordance with § 1.1441–1(e)(4)(iii). In the case of a payment to a person other than an individual, the certificate of residence or documentary evidence must be accompanied by the statements described in paragraphs (c)(5)(i) and (ii) of this section regarding limitation on benefits and whether the amount paid is derived by such person or by one of its interest holders. The withholding agent maintains the reviewed documents by retaining the original, certified copy, or photocopy (microfiche, electronic scan, or similar means of electronic storage) of such documents. With respect to documentary evidence, the withholding agent must also note in its records the date on which the documents were received and reviewed. This paragraph (c)(1) shall not apply to amounts that are exempt from withholding based on a claim that the income is effectively connected with the conduct of a trade or business in the United States. Notwithstanding the effective date of this section, the provisions of this paragraph apply for payments made on or after March 6, 2014.

(2) through (i)(2) [Reserved] For further guidance, see § 1.1441–6(c)(2) through (i)(2).

(i)(3) *Effective/applicability dates.* This section applies to payments made after June 30, 2014. (For payments made after December 31, 2000 (except for payments to which paragraph (g) of this section applies, in which case substitute December 31, 2001 for December 31, 2000), and before July 1, 2014, see this section as in effect and contained in 26 CFR part 1 revised April 1, 2013.)

(j) *Expiration date.* The applicability of this section expires on February 28, 2017.

[T.D. 9658, 79 FR 12780, Mar. 6, 2014; 79 FR 37186, July 1, 2014]

§ 1.1441–7 General provisions relating to withholding agents.

(a) *Withholding agent defined*—(1) *In general.* For purposes of chapter 3 of the Internal Revenue Code and the regulations under such chapter, the term *withholding agent* means any person, U.S. or foreign, that has the control, receipt, custody, disposal, or payment of an item of income of a foreign person subject to withholding, including (but not limited to) a foreign intermediary described in § 1.1441–1(e)(3)(i), a foreign partnership, or a U.S. branch described in § 1.1441–1(b)(2)(iv)(A) or (E). See §§ 1.1441–1(b)(2) and (3) and 1.1441–5(c), (d), and (e), for rules to determine whether a payment is considered made to a foreign person. Any person who meets the definition of a withholding agent is required to deposit any tax withheld under § 1.1461–1(a) and to make the returns prescribed by § 1.1461–1(b) and (c), except as otherwise may be required by a qualified intermediary withholding agreement, a withholding foreign partnership agreement, or a withholding foreign trust agreement. When several persons qualify as withholding agents with respect to a single payment, only one tax is required to be withheld and deposited. See § 1.1461–1. A person who, as a nominee described in § 1.6031(c)–1T, has furnished to a partnership all of the information required to be furnished under § 1.6031(c)–1T(a) shall not be treated as a withholding agent if it has notified the partnership that it is treating the provision of information to the partnership as a discharge of its obligations as a withholding agent.

(2) *Withholding agent with respect to dividend equivalents.* Each person that is a party to any contract or arrangement that provides for the payment of a dividend equivalent, as described in section 871(m) and the regulations thereunder, is treated as having control and custody of the payment.

(3) *Examples.* The following examples illustrate the rules of paragraphs (a)(1) and (a)(2) of this section:

Example 1. USB is a broker organized in the United States. USB pays U.S. source dividends and interest, which are amounts subject to withholding under § 1.1441–2(a), to FC, a foreign corporation that has an investment account with USB. USB is a withholding agent as defined in paragraph (a)(1) of this section.

Example 2. USB is a bank organized in the United States. FB is a bank organized in country X. FB has an omnibus account with USB through which FB invests in debt and

equity instruments that pay amounts subject to withholding as defined in § 1.1441–2(a). FB is a nonqualified intermediary, as defined in § 1.1441–1(c)(14). Both USB and FB are withholding agents as defined in paragraph (a)(1) of this section.

Example 3. The facts are the same as in *Example 2*, except that FB is a qualified intermediary. Both USB and FB are withholding agents as defined in paragraph (a)(1) of this section.

Example 4. FB is a bank organized in country X. FB has a branch in the United States. FB's branch has customers that are foreign persons who receive amounts subject to withholding, as defined in § 1.1441–2(a). FB is a withholding agent under paragraph (a)(1) of this section and is required to withhold and report payments of amounts subject to withholding in accordance with chapter 3 of the Internal Revenue Code.

Example 5. X is a foreign corporation. X pays dividends to shareholders who are foreign persons. Under section 861(a)(2)(B), a portion of the dividends are from sources within the United States and constitute amounts subject to withholding within the meaning of § 1.1441–2(a). The dividends are not subject to tax under section 884(a). See section 884(e)(3). X is a withholding agent under paragraph (a)(1) of this section.

Example 6. FC, a foreign corporation, enters into a notional principal contract (NPC) with Bank X, a bank organized in the United States. The NPC is a specified NPC for purposes of section 871(m) and the regulations thereunder. FC is the long party to the contract and Bank X is the short party. The NPC references a specified number of shares of dividend-paying common stock issued by a domestic corporation. As the long party, FC receives payments from Bank X based on any appreciation in the value of the common stock and dividends paid with respect to the common stock. As the short party, Bank X receives payment from FC based on any depreciation in the value of the common stock and a payment based on LIBOR. Bank X is a withholding agent because Bank X is deemed to have control and custody of a dividend equivalent as a party to the NPC. If FC's tax liability under section 881 has not been satisfied in full by Bank X as withholding agent, FC is required to file a return on Form 1120–F (U.S. Income Tax Return of a Foreign Corporation).

(4) *Effective/applicability date.* Paragraph (a)(2) of this section and *Example 6* apply on or after January 23, 2012.

(b) [Reserved] For further guidance, see § 1.1441–7T(b).

(c) [Reserved] For further guidance, see § 1.1441–7T(c).

(d) *United States obligations.* If the United States is a withholding agent for an item of interest, including original issue discount, on obligations of the United States or of any agency or instrumentality thereof, the withholding obligation of the United States is assumed and discharged by—

(1) The Commissioner of the Public Debt, for interest paid by checks issued through the Bureau of the Public Debt;

(2) The Treasurer of the United States, for interest paid by him or her, whether by check or otherwise;

(3) Each Federal Reserve Bank, for interest paid by it, whether by check or otherwise; or

(4) Such other person as may be designated by the IRS.

(e) *Assumed obligations.* If, in connection with the sale of a corporation's property, payment on the bonds or other obligations of the corporation is assumed by a person, then that person shall be a withholding agent to the extent amounts subject to withholding are paid to a foreign person. Thus, the person shall withhold such amounts under § 1.1441–1 as would be required to be withheld by the seller or corporation had no such sale or assumption been made.

(f) *Conduit financing arrangements*—(1) *Liability of withholding agent.* Subject to paragraph (f)(2) of this section, any person that is required to deduct and withhold tax under § 1.1441–3(g) is made liable for that tax by section 1461. A person that is required to deduct and withhold tax but fails to do so is liable for the payment of the tax and any applicable penalties and interest.

(2) *Exception for withholding agents that do not know of conduit financing arrangement*—(i) *In general.* A withholding agent will not be liable under paragraph (f)(1) of this section for failing to deduct and withhold with respect to a conduit financing arrangement unless the person knows or has reason to know that the financing arrangement is a conduit financing arrangement. This standard shall be satisfied if the withholding agent knows or has reason to know of facts sufficient to establish that the financing arrangement is a conduit financing arrangement, including facts sufficient to establish that the participation of the intermediate entity in the financing arrangement is pursuant to a tax avoidance plan. A

withholding agent that knows only of the financing transactions that comprise the financing arrangement will not be considered to know or have reason to know of facts sufficient to establish that the financing arrangement is a conduit financing arrangement.

(ii) [Reserved] For further guidance, see § 1.1441–7T(f)(2)(ii).

(3) *Effective date*. This paragraph (f) is effective for payments made by financed entities on or after September 11, 1995. This paragraph shall not apply to interest payments covered by section 127(g)(3) of the Tax Reform Act of 1984, and to interest payments with respect to other debt obligations issued prior to October 15, 1984 (whether or not such debt was issued by a Netherlands Antilles corporation).

(g) *Effective/applicability date*. Except as otherwise provided in paragraphs (a)(4) and (f)(3) of this section, this section applies to payments made after December 31, 2000.

(h) [Reserved] For further guidance, see § 1.1441–7T(h).

[T.D. 7977, 49 FR 36834, Sept. 20, 1984]

EDITORIAL NOTE: For FEDERAL REGISTER citations affecting § 1.1441–7, see the List of CFR Sections Affected, which appears in the Finding Aids section of the printed volume and at *www.fdsys.gov*.

§ 1.1441–7T General provisions relating to withholding agents (temporary).

(a) [Reserved] For further guidance, see § 1.1441–7(a).

(b) *Standards of knowledge*—(1) *In general*. A withholding agent must withhold at the full 30-percent rate under section 1441, 1442, or 1443(a) or at the full 4-percent rate under section 1443(b) if it has actual knowledge or reason to know that a claim of U.S. status or of a reduced rate of withholding under section 1441, 1442, or 1443 is unreliable or incorrect. A withholding agent shall be liable for tax, interest, and penalties to the extent provided under sections 1461 and 1463 and the regulations under those sections if it fails to withhold the correct amount despite its actual knowledge or reason to know the amount required to be withheld. For purposes of the regulations under sections 1441, 1442, and 1443, a withholding agent may rely on information or certifications contained in, or associated with, a withholding certificate or other documentation furnished by or for a beneficial owner or payee unless the withholding agent has actual knowledge or reason to know that the information or certifications are incorrect or unreliable and, if based on such knowledge or reason to know, it should withhold (under chapter 3 of the Code or another withholding provision of the Code) an amount greater than would be the case if it relied on the information or certifications, or it should report (under chapter 3 of the Code or under another provision of the Code) an amount that would not otherwise be reportable if it relied on the information or certifications. See § 1.1441–1(e)(4)(viii) for applicable reliance rules. A withholding agent that has received notification by the Internal Revenue Service (IRS) that a claim of U.S. status or of a reduced rate is incorrect has actual knowledge beginning on the date that is 30 calendar days after the date the notice is received. A withholding agent that fails to act in accordance with the presumptions set forth in §§ 1.1441–1(b)(3), 1.1441–4(a), 1.1441–5 (d) and (e), or 1.1441–9(b)(3) may also be liable for tax, interest, and penalties. See § 1.1441–1(b)(3)(ix) and (7). In the case of a withholding agent making a withholdable payment to a payee that the withholding agent is required to treat as a foreign entity, see § 1.1471–3(e) for standards of knowledge and §§ 1.1471–2 and 1.1472–1(b) for withholding that may apply under chapter 4.

(2) *Reason to know*. A withholding agent shall be considered to have reason to know if its knowledge of relevant facts or of statements contained in the withholding certificates or other documentation is such that a reasonably prudent person in the position of the withholding agent would question the chapter 3 claims made. For an obligation other than a preexisting obligation, a withholding agent will have reason to know that a chapter 3 claim made by the holder of the obligation (account holder) is unreliable or incorrect if any information contained in its account opening files or other files pertaining to the obligation (account information), including documentation

collected for purposes of AML due diligence (as defined under §1.1471–1(b)(4)), conflicts with the account holder's claim. A withholding agent will not, however, be considered to have reason to know that a person's chapter 3 claim is unreliable or incorrect based on documentation collected for AML due diligence until the date that is 30 days after the obligation is executed (or the account is opened for an obligation that is an account with a financial institution).

(3) *Financial institutions—limits on reason to know*—(i) *In general.* For purposes of this paragraph (b)(3) and paragraphs (b)(4) through (10) of this section, the terms withholding certificate, documentary evidence, and documentation are defined in §1.1441–1(c)(16), (17) and (18). Except as otherwise provided in paragraphs (b)(4) through (9) of this section, a withholding agent that is a financial institution under §1.1471–5(e), an insurance company (without regard to whether such company is a specified insurance company), or a broker or dealer in securities that maintains or opens an account for a beneficial owner (a direct account holder) has reason to know that documentation provided by the direct account holder is unreliable or incorrect only if one or more of the circumstances described in paragraphs (b)(4) through (9) of this section exist. If a direct account holder has provided documentation that is unreliable or incorrect under the rules of paragraph (b)(4) through (9) of this section, the withholding agent may require new documentation. Alternatively, the withholding agent may rely on the documentation originally provided if the rules of paragraphs (b)(4) through (9) of this section permit such reliance based on additional statements and documentation obtained by the withholding agent from the beneficial owner. Paragraph (b)(10) of this section provides rules regarding reason to know for withholding agents that receive beneficial owner documentation from persons (indirect account holders) that have an account relationship with, or an ownership interest in, a direct account holder of the withholding agent. Paragraph (b)(11) of this section provides limitations on a withholding agent's reason to know for multiple obligations held by the same person. Paragraph (b)(12) of this section defines a reasonable explanation provided by an individual with respect to the individual's claim of foreign status. For rules regarding reliance on Form W–9, see §31.3406(g)–3(e)(2) of this chapter. For payments that are withholdable payments, see §1.1471–3(e)(3) and (4) for additional rules regarding a withholding agent's reason to know with respect to a payee's claim of chapter 4 status and §1.1471–3(f) for presumption rules that apply when the claim of chapter 4 status is unreliable or incorrect.

(ii) *Limits on reason to know for preexisting obligations.* With respect to a preexisting obligation, a withholding agent that has documented the foreign status of the direct account holder for purposes of chapter 3 or chapter 61 before July 1, 2014 may continue to rely on such documentation. If, however, the withholding agent reviews documentation for an individual account holder claiming foreign status that contains a U.S. place of birth (as described in paragraph (b)(5)(ii) of this section) or if the withholding agent is notified of a change in circumstances under the criteria of paragraphs (b)(5) and (8) of this section (as effective on July 1, 2014), the obligation will be treated as having experienced a change in circumstances under §1.1441–1(e)(4)(ii)(D) as of the date that the withholding agent reviews the documentation or receives the notification, and the withholding agent will then have reason to know that the documentation is unreliable or incorrect. See §1.1441–1(b)(3)(iv) for the grace period following a changes in circumstances.

(4) *Rules applicable to withholding certificates*—(i) *In general.* A withholding agent has reason to know that a beneficial owner withholding certificate provided by a direct account holder is unreliable or incorrect if the withholding certificate is incomplete with respect to any item on the certificate that is relevant to the claims made by the direct account holder, the withholding certificate contains any information that is inconsistent with the direct account holder's claim, the withholding agent has account information

that is inconsistent with the direct account holder's claim, or the withholding certificate lacks information necessary to establish entitlement to a reduced rate of withholding. For purposes of establishing a direct account holder's status as a foreign person or resident of a treaty country a withholding certificate shall be considered unreliable or inconsistent with an account holder's claims only if it is not reliable under the rules of paragraphs (b)(5) and (6) of this section. A withholding agent that relies on an agent to review and maintain a withholding certificate is considered to know or have reason to know the facts within the knowledge of the agent.

(ii) *Examples*. The rules of paragraph (b)(4) of this section are illustrated by the following examples:

Example 1. F, a foreign person that has a direct account relationship with USB, a bank that is a U.S. person, provides USB with a beneficial owner withholding certificate for the purpose of claiming a reduced rate of withholding on U.S. source dividends (which is a withholdable payment). F resides in a treaty country that has a limitation on benefits provision in its income tax treaty with the United States. The withholding certificate includes a certification of F's status for chapter 4 purposes to except the payment from withholding under chapter 4, but does not contain a statement regarding limitations on benefits or deriving the income under section 894 as required by §1.1441–6(b)(1). USB cannot rely on the withholding certificate to grant a reduced rate of withholding for chapter 3 purposes because it is incomplete with respect to the claim made by F.

Example 2. F, a foreign person and entity that has a direct account relationship with USB, a broker that is a U.S. person, provides USB with a withholding certificate for the purpose of claiming the portfolio interest exception under section 881(c) with respect to interest paid on an obligation issued before July 1, 2014. The payment of interest is not a withholdable payment under §1.1471–2(b) (referring to payments made with respect to grandfathered obligations), and, therefore, withholding does not apply to the payment under chapter 4. See §1.1441–3(c)(4)(i) for rules coordinating withholding under chapters 3 and 4. F indicates on its withholding certificate, however, that it is a partnership. USB may not treat F as a beneficial owner of the interest for purposes of the portfolio interest exception because F has indicated on its withholding certificate that it is a foreign partnership, and such entity classification is inconsistent with its claim as a beneficial owner.

(5) *Withholding certificate—establishment of foreign status*. A withholding agent has reason to know that a beneficial owner withholding certificate (as defined in §1.1441–1(e)(2)) provided by a direct account holder is unreliable or incorrect for purposes of establishing the account holder's status as a foreign person as set forth in paragraphs (b)(5)(i) through (iii) of this section.

(i) *Classification of U.S. status, U.S. address, or U.S. telephone number*. A withholding certificate is unreliable or incorrect if the withholding agent has classified the person as a U.S. person in its account information, the withholding certificate has a current permanent residence address (as defined in §1.1441–1(e)(2)(ii)) in the United States, the withholding certificate has a current mailing address in the United States, the withholding agent has a current residence or mailing address as part of its account information that is an address in the United States, or the direct account holder notifies the withholding agent of a new residence or mailing address in the United States (whether or not provided on a withholding certificate). A withholding agent also has reason to know that a withholding certificate provided by a person is unreliable or incorrect if the withholding agent has a current telephone number for the account holder in the United States and has no telephone number for the account holder outside of the United States. When any of the foregoing indicia are present (U.S. indicia), a withholding agent may nevertheless rely on the beneficial owner withholding certificate to establish the account holder's foreign status if it may do so under the provisions of paragraph (b)(5)(i)(A) or (B) of this section.

(A) A withholding agent may treat a direct account holder as a foreign person if the beneficial owner withholding certificate has been provided by an individual and—

(*1*) The withholding agent has in its possession or obtains documentary evidence establishing foreign status (as described in §1.1471–3(c)(5)(i)) that does not contain a U.S. address and the individual provides the withholding agent

with a reasonable explanation, in writing, supporting the claim of foreign status (as defined in paragraph (b)(12) of this section);

(*2*) For a payment made outside the U.S. with respect to an offshore obligation (as described in §1.6049–5(c)(1)), the withholding agent has in its possession or obtains documentary evidence establishing foreign status (as described in §1.1471–3(c)(5)(i)), that does not contain a U.S. address;

(*3*) For a payment made with respect to an offshore obligation (with offshore obligation defined as in §1.6049–5(c)(1)), the withholding agent classifies the individual as a resident of the country in which the obligation is maintained, the withholding agent is required to report a payment made to the individual annually on a tax information statement that is filed with the tax authority of the country in which the office is located as part of that country's resident reporting requirements, and that country has a tax information exchange agreement or income tax treaty in effect with the United States; or

(*4*) For a case in which the withholding agent classified the account holder as a U.S. person in its account information, the withholding agent has in its possession or obtains documentary evidence described in §1.1471–3(c)(5)(i)(B) evidencing citizenship in a country other than the United States.

(B) A withholding agent may treat a direct account holder as a foreign person if the beneficial owner withholding certificate has been provided by an entity that the withholding agent does not know, or does not have reason to know, is a flow-through entity and—

(*1*) The withholding agent has in its possession or obtains documentation establishing foreign status (as described in §1.1471–3(c)(5)(i) and as applicable to entities) that substantiates that the entity is actually organized or created under the laws of a foreign country; or

(*2*) For a payment made with respect to an offshore obligation (with offshore obligation defined as in §1.6049–5(c)(1)), the withholding agent classifies the entity as a resident of the country in which the account is maintained, the withholding agent is required to report a payment made to the entity annually on a tax information statement that is filed with the tax authority of the country in which the office is located as part of that country's resident reporting requirements, and that country has a tax information exchange agreement or income tax treaty in effect with the United States.

(ii) *U.S. place of birth.* A withholding agent has reason to know that a withholding certificate claiming foreign status provided by a direct account holder that is an individual is unreliable or incorrect if the withholding agent has, either on accompanying documentation or as part of its account information, an unambiguous indication of a place of birth for the individual in the United States. A withholding agent may treat the individual as a foreign person, notwithstanding the U.S. place of birth, if the withholding agent has in its possession or obtains documentary evidence described in §1.1471–3(c)(5)(i)(B) evidencing citizenship in a country other than the United States and either a copy of the individual's Certificate of Loss of Nationality of the United States or a reasonable written explanation of the account holder's renunciation of U.S. citizenship or the reason the account holder did not obtain U.S. citizenship at birth.

(iii) *Standing instructions with respect to offshore obligations.* A beneficial owner withholding certificate is unreliable or incorrect if it is provided with respect to an offshore obligation (as defined in §1.6049–5(c)(1)) of a direct account holder that has provided standing instructions to pay amounts to an address or an account maintained in the United States. The withholding agent may treat the account holder as a foreign person, however, if the account holder provides either a reasonable explanation in writing that supports its foreign status or documentary evidence establishing foreign status described in §1.1471–3(c)(5)(i).

(6) *Withholding certificate—claim of reduced rate of withholding under treaty.* A withholding agent has reason to know that a withholding certificate (other than Form W–9) provided by a direct account holder is unreliable or incorrect for purposes of establishing that the account holder is a resident of a

country with which the United States has an income tax treaty if it is described in paragraphs (b)(6)(i) through (iii) of this section.

(i) *Permanent residence address.* A beneficial owner withholding certificate is unreliable or incorrect if the permanent residence address on the beneficial owner withholding certificate is not in the country whose treaty is invoked, or the direct account holder notifies the withholding agent of a new permanent residence address that is not in the treaty country. A withholding agent may, however, treat a direct account holder as entitled to a reduced rate of withholding under an income tax treaty if the account holder provides a reasonable explanation for the permanent residence address outside the treaty country (e.g., the address is the address of a branch of the beneficial owner located outside the treaty country in which the entity is a resident) or the withholding agent has in its possession or obtains documentary evidence described in §1.1471–3(c)(5)(i) that establishes residency in a treaty country.

(ii) *Mailing address.* A beneficial owner withholding certificate is unreliable or incorrect if the permanent residence address on the withholding certificate is in the applicable treaty country but the withholding certificate contains a mailing address outside the treaty country or the withholding agent has a current mailing address as part of its account information for the direct account holder that is outside the treaty country. A mailing address that is a P.O. Box, in-care-of address, or address at a financial institution (if the financial institution is not a beneficial owner) shall not preclude a withholding agent from treating the account holder as a resident of a treaty country if such address is in the treaty country. If a withholding agent has a mailing address (whether or not contained on the withholding certificate) outside the applicable treaty country, the withholding agent may nevertheless treat a direct account holder as a resident of an applicable treaty country if—

(A) The withholding agent has in its possession or obtains documentary evidence described in §1.1471–3(c)(5)(i) supporting the account holder's claim of residence in the applicable treaty country (and the additional documentation does not contain an address outside the treaty country);

(B) The withholding agent has in its possession, or obtains, documentation that establishes that the direct account holder is an entity organized in a treaty country (or an entity managed and controlled in a treaty country, if the applicable treaty so requires);

(C) The withholding agent knows that the address outside the applicable treaty country (other than a P.O. box, or in-care-of address) is a branch of the account holder that is an entity that is a resident of the applicable treaty country; or

(D) The withholding agent obtains a written statement from the direct account holder that reasonably establishes entitlement to treaty benefits.

(iii) *Standing instructions.* A beneficial owner withholding certificate is unreliable or incorrect to establish entitlement to a reduced rate of withholding under an income tax treaty if the direct account holder has standing instructions to pay amounts directing the withholding agent to pay amounts from its account to an address or an account outside the treaty country unless the account holder provides a reasonable explanation, in writing, or the withholding agent has in its possession or obtains documentary evidence described in §1.1471–3(c)(5)(i) establishing the account holder's residence in the applicable treaty country.

(7) *Documentary evidence.* A withholding agent shall not treat documentary evidence provided by a direct account holder as valid if the documentary evidence does not reasonably establish the identity of the person presenting the documentary evidence. For example, documentary evidence is not valid if it is provided in person by a direct account holder that is a natural person and the photograph or signature on the documentary evidence, if any, does not match the appearance or signature of the person presenting the document. A withholding agent shall not rely on documentary evidence to reduce the rate of withholding that would otherwise apply under the presumption rules of §§1.1441–1(b)(3),

1.1441–5(d) and (e)(6), and 1.6049–5(d) if the documentary evidence contains information that is inconsistent with the direct account holder's claim of a reduced rate of withholding, the withholding agent has other account information that is inconsistent with the direct account holder's claim, or the documentary evidence lacks information necessary to establish entitlement to a reduced rate of withholding. For example, if a direct account holder provides documentary evidence to claim treaty benefits and the documentary evidence establishes the direct account holder's status as a foreign person and a resident of a treaty country, but the account holder fails to provide the treaty statements required by §1.1441–6(c)(5), the documentary evidence does not establish the direct account holder's entitlement to a reduced rate of withholding. For purposes of establishing a direct account holder's status as a foreign person or resident of a country with which the United States has an income tax treaty, documentary evidence shall be considered unreliable or incorrect only if it is not reliable under the rules of paragraph (b)(8) and (9) of this section.

(8) *Documentary evidence—establishment of foreign status.* A withholding agent has reason to know that documentary evidence is unreliable or incorrect for purposes of establishing the direct account holder's status as a foreign person if the documentary evidence is described in paragraphs (b)(8)(i), (ii), (iii), or (iv) of this section.

(i) *Documentary evidence received prior to January 1, 2001.* A withholding agent shall not treat documentary evidence provided by a direct account holder before January 1, 2001, as valid for purposes of establishing the account holder's status as a foreign person if it has actual knowledge that the account holder is a U.S. person or if it has a mailing or residence address for the account holder in the United States. If a withholding agent has an address for the direct account holder in the United States, the withholding agent may nevertheless treat the account holder as a foreign person if it can so treat the account holder under the rules of paragraph (b)(8)(ii) of this section. See, however, paragraph (b)(3)(ii) of this section regarding changes in circumstances with respect to preexisting obligations.

(ii) *Documentary evidence received after December 31, 2000.* A withholding agent shall not treat documentary evidence provided by an account holder after December 31, 2000, as valid for purposes of establishing the direct account holder's foreign status if the withholding agent does not have a permanent residence address for the account holder. Documentary evidence is also unreliable or incorrect to establish a direct account holder's status as a foreign person if the withholding agent has classified the account holder as a U.S. person in its account information, if the withholding agent has a current mailing or permanent residence address (whether or not on the documentation) for the direct account holder in the United States, the direct account holder notifies the withholding agent of a new residence or mailing address in the United States, or if the withholding agent has a current telephone number for the account holder in the United States and has no telephone number for the account holder outside of the United States. Notwithstanding the foregoing, a withholding agent may rely on documentary evidence as establishing the direct account holder's foreign status if it may do so under the provisions of paragraph (b)(8)(ii)(A) or (B) of this section.

(A) *Treatment of individual's foreign status.* A withholding agent may treat a direct account holder that is an individual as a foreign person even if it has any of the U.S. indicia described in paragraph (b)(8)(ii) of this section for the account holder if—

(*1*) The withholding agent has in its possession or obtains additional documentary evidence supporting the claim of foreign status (described in §1.1471–3(c)(5)(i)) that does not contain a U.S. address and a reasonable explanation in writing supporting the account holder's foreign status;

(*2*) The withholding agent obtains a valid beneficial owner withholding certificate on Form W–8 and the Form W–8 contains a permanent residence address outside the United States and a mailing address outside the United States (or if a mailing address is inside

the United States the account holder provides a reasonable explanation in writing supporting the account holder's foreign status); or

(*3*) For a payment made with respect to an offshore obligation (with offshore obligation defined as in §1.6049–5(c)(1)), the withholding agent classifies the individual as a resident of the country in which the obligation is maintained, the withholding agent is required to report a payment made to the individual annually on a tax information statement that is filed with the tax authority of the country in which the office is located as part of that country's resident reporting requirements, and that country has a tax information exchange agreement or income tax treaty in effect with the United States.

(B) *Presumption of entity's foreign status.* A withholding agent may treat a direct account holder that is an entity (other than a flow-through entity) as a foreign person even if it has any of the U.S. indicia described in paragraph (b)(8)(ii) of this section for the account holder in the United States if—

(*1*) The withholding agent has in its possession or obtains documentary evidence establishing foreign status (as described in §1.1471–3(c)(5)(i)) that substantiates that the entity is actually organized or created under the laws of a foreign country;

(*2*) The withholding agent obtains a valid beneficial owner withholding certificate on Form W–8 and the Form W–8 contains a permanent residence address outside the United States and a mailing address outside the United States (or if a mailing address is inside the United States the account holder provides additional documentary evidence sufficient to establish the account holder's foreign status); or

(*3*) For a payment made with respect to an offshore obligation (with offshore obligation defined as in §1.6049–5(c)(1)), the withholding agent classifies the entity as a resident of the country in which the account is maintained, the withholding agent is required to report a payment made to the entity annually on a tax information statement that is filed with the tax authority of the country in which the office is located as part of that country's resident reporting requirements, and that country has a tax information exchange agreement or income tax treaty in effect with the United States.

(iii) *U.S. place of birth.* A withholding agent has reason to know that documentary evidence provided by a direct account holder to support an individual's foreign status is unreliable or incorrect if the withholding agent has, either on the documentary evidence or as part of its account information, an unambiguous place of birth for the individual in the United States. A withholding agent may treat the individual as a foreign person, notwithstanding the U.S. birth place, if the withholding agent has in its possession or obtains documentary evidence described in §1.1471–3(c)(5)(i)(B) evidencing citizenship in a country other than the United States and a copy of the individual's Certificate of Loss of Nationality of the United States. Alternatively, a withholding agent may treat the individual as a foreign person if the withholding agent obtains a valid beneficial owner withholding certificate on Form W–8 from the individual that establishes the account holder's foreign status, documentary evidence described in §1.1471–3(c)(5)(i)(B) evidencing citizenship in a country other than the United States, and a reasonable written explanation of the individual's renunciation of U.S. citizenship or the reason the individual did not obtain U.S. citizenship at birth.

(iv) *Standing instructions with respect to offshore obligations.* Documentary evidence is unreliable or incorrect if it is provided with respect to an offshore obligation (as defined in §1.6049–5(c)(1)) of a direct account holder that has provided the withholding agent with standing instructions to pay amounts to an address or an account maintained in the United States. The withholding agent may treat the direct account holder as a foreign person, however, if the account holder provides either a reasonable explanation in writing that supports its foreign status or a valid beneficial owner withholding certificate claiming foreign status.

(9) *Documentary evidence—claim of reduced rate of withholding under treaty.* A withholding agent has reason to know

that documentary evidence is unreliable or incorrect for purposes of establishing that a direct account holder is a resident of a country with which the United States has an income tax treaty if it is described in paragraph (b)(9)(i) or (ii) of this section.

(i) *Permanent residence address and mailing address.* Documentary evidence is unreliable or incorrect if the withholding agent has a current mailing or current permanent residence address for the direct account holder (whether or not on the documentary evidence) that is outside the applicable treaty country, or the withholding agent has no permanent residence address for the account holder. If a withholding agent has a current mailing or current permanent residence address for the direct account holder outside the applicable treaty country, the withholding agent may nevertheless treat a direct account holder as a resident of an applicable treaty country if the withholding agent—

(A) Has in its possession or obtains additional documentary evidence described in §1.1471–3(c)(5)(i) supporting the direct account holder's claim of residence in the applicable treaty country (and the documentary evidence does not contain an address outside the applicable treaty country, a P.O. box, an in-care-of address, or the address of a financial institution);

(B) Has in its possession or obtains documentary evidence described in §1.1471–3(c)(5)(i) that establishes the direct account holder is an entity organized in a treaty country (or an entity managed and controlled in a treaty country, if the applicable treaty so requires); or

(C) Obtains a valid beneficial owner withholding certificate on Form W–8 that contains a permanent residence address and a mailing address in the applicable treaty country.

(ii) *Standing instructions.* Documentary evidence is unreliable or incorrect if the direct account holder has provided the withholding agent with standing instructions to pay amounts to an address or an account maintained outside the treaty country unless the direct account holder provides a reasonable explanation, in writing, establishing the direct account holder's residence in the applicable treaty country, or a valid beneficial owner withholding certificate that contains a permanent residence address and a mailing address in the applicable treaty country.

(10) *Indirect account holders.* A withholding agent that receives documentation from a payee through a nonqualified intermediary, a flow-through entity, or a U.S. branch (including a territory financial institution) described in §1.1441–1(b)(2)(iv) (other than a U.S. branch or territory financial institution that is treated as a U.S. person) has reason to know that the documentation is unreliable or incorrect if a reasonably prudent person in the position of a withholding agent would question the claims made. This standard requires, but is not limited to, a withholding agent's compliance with the rules of paragraphs (b)(10)(i) through (iii).

(i) The withholding agent must review the withholding statement described in §1.1441–1(e)(3)(iv) and may not rely on information in the statement to the extent the information does not support the claims made for any payee. For this purpose, a withholding agent may not treat a payee as a foreign person if an address in the United States is provided for such payee and may not treat a person as a resident of a country with which the United States has an income tax treaty if the address for that person is outside the applicable treaty country. Notwithstanding a U.S. address or an address outside a treaty country, the withholding agent may treat a payee as a foreign person or a foreign person as a resident of a treaty country if the withholding statement is accompanied by a valid withholding certificate and documentary evidence (as described in §1.1471–3(c)(5)(i)) or a reasonable explanation is provided, in writing, by the nonqualified intermediary, flow-through entity, or U.S. branch supporting the payee's foreign status or the foreign person's residency in a treaty country.

(ii) The withholding agent must review each withholding certificate in accordance with the requirements of paragraphs (b)(5) and (6) of this section and verify that the information on the withholding certificate is consistent

with the information on the withholding statement required under § 1.1441–1(e)(3)(iv). If there is a discrepancy between the withholding certificate and the withholding statement, the withholding agent may choose to rely on the withholding certificate, if valid, and instruct the nonqualified intermediary, flow-through entity, or U.S. branch to correct the withholding statement or apply the presumption rules of §§ 1.1441–1(b), 1.1441–5(d) and (e)(6), 1.6049–5(d), and 1.1471–3(f) (for a withholdable payment for chapter 4 purposes) to the payment allocable to the payee who provided the withholding certificate. If the withholding agent chooses to rely upon the withholding certificate, the withholding agent is required to instruct the intermediary or flow-through entity to correct the withholding statement and confirm that the intermediary or flow-through entity does not know or have reason to know that the withholding certificate is unreliable or inaccurate.

(iii) The withholding agent must review the documentary evidence provided by the nonqualified intermediary, flow-through entity, or U.S. branch to determine that there is no obvious indication that the payee is a U.S. non-exempt recipient or that the documentary evidence does not establish the identity of the person who provided the documentation (e.g., the documentary evidence does not appear to be an identification document).

(11) *Limits on reason to know for multiple obligations belonging to a single person.* A withholding agent that maintains multiple obligations for a single person will have reason to know that a claim of foreign status for the person is inaccurate based on account information for another obligation held by the person only to the extent that—

(i) The withholding agent's computerized systems link the obligations by reference to a data element such as client number, EIN, or foreign tax identifying number and consolidates the account information and payment information for the obligations; or

(ii) The withholding agent has treated the obligations as consolidated obligations for purposes of sharing documentation pursuant to § 1.1441–1(e)(4)(ix).

(12) *Reasonable explanation supporting claim of foreign status.* A reasonable explanation supporting an individual's claim of foreign status for purposes of paragraphs (b)(5) and (8) of this section means a written statement prepared by the individual or the individual's completion of a checklist provided by the withholding agent, stating that the individual meets the requirements of one of paragraphs (b)(12)(i) through (iv) of this section.

(i) The individual certifies that he or she—

(A) Is a student at a U.S. educational institution and holds the appropriate visa;

(B) Is a teacher, trainee, or intern at a U.S. educational institution or a participant in an educational or cultural exchange visitor program, and holds the appropriate visa;

(C) Is a foreign individual assigned to a diplomatic post or a position in a consulate, embassy, or international organization in the United States; or

(D) Is a spouse or unmarried child under the age of 21 years of one of the persons described in paragraphs (b)(12)(i)(A) through (C) of this section;

(ii) The individual provides information demonstrating that he or she has not met the substantial presence test set forth in § 301.7701(b)–1(c) of this chapter (e.g., a written statement indicating the number of days present in the United States during the three-year period that includes the current year);

(iii) The individual certifies that he or she meets the closer connection exception described in § 301.7701(b)–2, states the country to which the individual has a closer connection, and demonstrates how that closer connection has been established; or

(iv) With respect a payment entitled to a reduced rate of tax under a U.S. income tax treaty, the individual certifies that he or she is treated as a resident of a country other than the United States and is not treated as a U.S. resident or U.S. citizen for purposes of that income tax treaty.

(13) *Additional guidance.* The IRS may prescribe other circumstances for

which a withholding certificate or documentary evidence is unreliable or incorrect in addition to the circumstances described in paragraph (b) of this section to establish an account holder's status as a foreign person or a beneficial owner entitled to a reduced rate of withholding in published guidance (see § 601.601(d)(2) of this chapter).

(c) *Agent*—(1) *In general*. A withholding agent may authorize an agent to fulfill its obligations under chapter 3 if the requirements of paragraph (c)(2) of this section are satisfied. The acts of an agent of a withholding agent (including the receipt of withholding certificates, the payment of amounts of income subject to withholding, and the deposit of tax withheld) are imputed to the withholding agent on whose behalf it is acting.

(2) *Authorized agent*. An agent is an authorized agent only if—

(i) There is a written agreement between the withholding agent and the foreign person acting as agent that clearly provides which obligations under chapter 3 that the agent is authorized to fulfill;

(ii) A Form 8655, ''Reporting Agent Authorization,'' is filed with the IRS if the agent (including any sub-agent) is acting as a reporting agent for filing Form 1042 or making tax deposits and payments;

(iii) Books and records and relevant personnel of the agent (including any sub-agent) are available to the withholding agent (on a continuous basis, including after termination of the relationship) in order to evaluate the withholding agent's compliance with the provisions of chapters 3, 4, and 61 of the Code, section 3406, and the regulations under those provisions; and

(iv) The U.S. withholding agent remains fully liable for the acts of its agent (or for any sub-agent) and does not assert any of the defenses that may otherwise be available, including under common law principles of agency in order to avoid tax liability under the Internal Revenue Code.

(3) *Liability of withholding agent acting through an agent*. An authorized agent is subject to the same withholding and reporting obligations that apply to any withholding agent under the provisions of chapter 3 of the Code and the regulations thereunder. See the instructions to Form 1042–S for the manner for filing the form when an authorized agent acts on behalf of a withholding agent. Except as otherwise provided in the QI, WP, and WT agreements, an authorized agent does not benefit from the special procedures or exceptions that may apply to a qualified intermediary, WP, or WT. A withholding agent acting through an authorized agent is liable for any failure of the agent, such as failure to withhold an amount or make payment of tax, in the same manner and to the same extent as if the agent's failure had been the failure of the withholding agent. For this purpose, the agent's actual knowledge or reason to know shall be imputed to the withholding agent. The withholding agent's liability shall exist irrespective of the fact that the authorized agent is also a withholding agent and is itself separately liable for failure to comply with the provisions of the regulations under section 1441, 1442, or 1443. However, the same tax, interest, or penalties shall not be collected more than once.

(d) through (f)(2)(i) [Reserved] For further guidance, see §1.1441–7(d) through (f)(2)(i).

(f)(2)(ii) *Examples*. The following examples illustrate the operation of paragraph (d)(2) of this section. Each example assumes that withholding under chapter 4 does not apply.

Example 1. (i) DS is a U.S. subsidiary of FP, a corporation organized in Country N, a country that does not have an income tax treaty with the United States. FS is a special purpose subsidiary of FP that is incorporated in Country T, a country that has an income tax treaty with the United States that prohibits the imposition of withholding tax on payments of interest. FS is capitalized with $10,000,000 in debt from BK, a Country N bank, and $1,000,000 in capital from FS.

(ii) On May 1, 1995, C, a U.S. person, purchases an automobile from DS in return for an installment note. On July 1, 1995, DS sells a number of installment notes, including C's, to FS in exchange for $10,000,000. DS continues to service the installment notes for FS and C is not notified of the sale of its obligation and continues to make payments to DS. But for the withholding tax on payments of interest by DS to BK, DS would have borrowed directly from BK, pledging the installment notes as collateral.

(iii) The C installment note is a financing transaction, whether held by DS or by FS,

and the FS note held by BK also is a financing transaction. After FS purchases the installment note, and during the time the installment note is held by FS, the transactions constitute a financing arrangement, within the meaning of §1.881–3(a)(2)(i). BK is the financing entity, FS is the intermediate entity, and C is the financed entity. Because the participation of FS in the financing arrangement reduces the tax imposed by section 881 and because there was a tax avoidance plan, FS is a conduit entity.

(iv) Because C does not know or have reason to know of the tax avoidance plan (and by extension that the financing arrangement is a conduit financing arrangement), C is not required to withhold tax under section 1441. However, DS, who knows that FS's participation in the financing arrangement is pursuant to a tax avoidance plan and is a withholding agent for purposes of section 1441, is not relieved of its withholding responsibilities.

Example 2. Assume the same facts as in *Example 1* except that C receives a new payment booklet on which DS is described as ''agent''. Although C may deduce that its installment note has been sold, without more C has no reason to know of the existence of a financing arrangement. Accordingly, C is not liable for failure to withhold, although DS still is not relieved of its withholding responsibilities.

Example 3. (i) DC is a U.S. corporation that is in the process of negotiating a loan of $10,000,000 from BK1, a bank located in Country N, a country that does not have an income tax treaty with the United States. Before the loan agreement is signed, DC's tax lawyers point out that interest on the loan would not be subject to withholding tax if the loan were made by BK2, a subsidiary of BK1 that is incorporated in Country T, a country that has an income tax treaty with the United States that prohibits the imposition of withholding tax on payments of interest. BK1 makes a loan to BK2 to enable BK2 to make the loan to DC. Without the loan from BK1 to BK2, BK2 would not have been able to make the loan to DC.

(ii) The loan from BK1 to BK2 and the loan from BK2 to DC are both financing transactions and together constitute a financing arrangement within the meaning of §1.881–3(a)(2)(i). BK1 is the financing entity, BK2 is the intermediate entity, and DC is the financed entity. Because the participation of BK2 in the financing arrangement reduces the tax imposed by section 881 and because there is a tax avoidance plan, BK2 is a conduit entity.

(iii) Because DC is a party to the tax avoidance plan (and accordingly knows of its existence), DC must withhold tax under section 1441. If DC does not withhold tax on its payment of interest, BK2, a party to the plan and a withholding agent for purposes of section 1441, must withhold tax as required by section 1441.

Example 4. (i) DC is a U.S. corporation that has a long-standing banking relationship with BK2, a U.S. subsidiary of BK1, a bank incorporated in Country N, a country that does not have an income tax treaty with the United States. DC has borrowed amounts of as much as $75,000,000 from BK2 in the past. On January 1, 1995, DC asks to borrow $50,000,000 from BK2. BK2 does not have the funds available to make a loan of that size. BK2 considers asking BK1 to enter into a loan with DC but rejects this possibility because of the additional withholding tax that would be incurred. Accordingly, BK2 borrows the necessary amount from BK1 with the intention of on-lending to DC. BK1 does not make the loan directly to DC because of the withholding tax that would apply to payments of interest from DC to BK1. DC does not negotiate with BK1 and has no reason to know that BK1 was the source of the loan.

(ii) The loan from BK2 to DC and the loan from BK1 to BK2 are both financing transactions and together constitute a financing arrangement within the meaning of §1.881–3(a)(2)(i). BK1 is the financing entity, BK2 is the intermediate entity, and DC is the financed entity. The participation of BK2 in the financing arrangement reduces the tax imposed by section 881. Because the participation of BK2 in the financing arrangement reduces the tax imposed by section 881 and because there was a tax avoidance plan, BK2 is a conduit entity.

(iii) Because DC does not know or have reason to know of the tax avoidance plan (and by extension that the financing arrangement is a conduit financing arrangement), DC is not required to withhold tax under section 1441. However, BK2, who is also a withholding agent under section 1441 and who knows that the financing arrangement is a conduit financing arrangement, is not relieved of its withholding responsibilities.

(3) and (g) [Reserved] For further guidance, see §1.1441–7(f)(3) and (g).

(h) *Effective date/Applicability.* Except as otherwise provided in paragraph (f)(3) of this section, this section applies to payments made after June 30, 2014. (For payments made after December 31, 2000, and before July 1, 2014, see this section as in effect and contained in 26 CFR part 1, as revised April 1, 2013.)

(i) *Expiration date.* The applicability of this section expires on February 28, 2017.

[T.D. 9658, 79 FR 12782, Mar. 6, 2014; 79 FR 37187, July 1, 2014]

§ 1.1441–8 Exemption from withholding for payments to foreign governments, international organizations, foreign central banks of issue, and the Bank for International Settlements.

(a) *Foreign governments.* Under section 892, certain specific types of income received by foreign governments are excluded from gross income and are exempt from taxation, unless derived from the conduct of a commercial activity or received from or by a controlled commercial entity. Accordingly, withholding is not required under § 1.1441.1 with regard to any item of income which is exempt from taxation under section 892.

(b) *Reliance on claim of exemption by foreign government.* Absent actual knowledge or reason to know otherwise, the withholding agent may rely upon a claim of exemption made by the foreign government if, prior to the payment, the withholding agent can reliably associate the payment with documentation upon which it can rely to treat the payment as made to a beneficial owner in accordance with § 1.1441–1(e)(1)(ii). A Form W–8 furnished by a foreign government for purposes of claiming an exemption under this paragraph (b) is valid only if, in addition to other applicable requirements, it certifies that the income is, or will be, exempt from taxation under section 892 and the regulations under that section and whether the person whose name is on the certificate is an integral part of a foreign government (as defined in § 1.892–2T(a)(2)) or a controlled entity (as defined in § 1.892–2T(a)(3)).

(c) *Income of a foreign central bank of issue or the Bank for International Settlements*—(1) *Certain interest income.* Section 895 provides for the exclusion from gross income of certain income derived by a foreign central bank of issue, or by the Bank for International Settlements, from obligations of the United States or of any agency or instrumentality thereof or from interest on deposits with persons carrying on the banking business if the bank is the owner of the obligations or deposits and does not hold the obligations or deposits for, or use them in connection with, the conduct of a commercial banking function or other commercial activity by such bank. See § 1.895–1. Absent actual knowledge or reason to know that a foreign central bank of issue, or the Bank for International Settlements, is operating outside the scope of the exclusion granted by section 895 and the regulations under that section, the withholding agent may rely on a claim of exemption if, prior to the payment, the withholding agent can reliably associate the payment with documentation upon which it can rely to treat the foreign central bank of issue or the Bank for International Settlements as the beneficial owner of the payment in accordance with § 1.1441–1(e)(1)(ii). A Form W–8 furnished by a foreign central bank of issue or the Bank for International Settlements for purposes of claiming an exemption under this paragraph (c)(1) is valid only if, in addition to other applicable requirements, it certifies that the person whose name is on the certificate is a foreign central bank of issue, or the Bank for International Settlements, and that the bank does not, and will not, hold the obligations or the bank deposits covered by the Form W–8 for, or use them in connection with, the conduct of a commercial banking function or other commercial activity.

(2) *Bankers acceptances.* Interest derived by a foreign central bank of issue from bankers acceptances is exempt from tax under sections 871(i)(2)(C) and 881(d) and § 1.861–2(b)(4). With respect to bankers' acceptances, a withholding agent may treat a payee as a foreign central bank of issue without requiring a withholding certificate if the name of the payee and other facts surrounding the payment reasonably indicate that the payee or beneficial owner is a foreign central bank of issue, as defined in § 1.861–2(b)(4).

(d) *Exemption for payments to international organizations.* A payment to an international organization (within the meaning of section 7701(a)(18)) is exempt from withholding on any payment. A withholding agent may treat a payee as an international organization without requiring a withholding certificate if the name of the payee is one that is designated as an international organization by executive order (pursuant to 22 U.S.C. 288 through 288(f)) and

other facts surrounding the transaction reasonably indicate that the international organization is the beneficial owner of the payment.

(e) *Failure to receive withholding certificate timely and other applicable procedures.* See applicable procedures described in §1.1441–1(b)(7) in the event the withholding agent does not hold a valid withholding certificate described in paragraph (b) or (c)(1) of this section or other appropriate documentation at the time of payment. Further, the provisions of §1.1441–1(e)(4) shall apply to withholding certificates and other documents related thereto furnished under the provisions of this section.

(f) *Effective date*—(1) *In general.* This section applies to payments made after December 31, 2000.

(2) *Transition rules.* For purposes of this section, the validity of a Form 8709 that was valid on January 1, 1998, under the regulations in effect prior to January 1, 2001 (see 26 CFR part 1, revised April 1, 1999) and expired, or will expire, at any time during 1998, is extended until December 31, 1998. The validity of a Form 8709 that is valid on or after January 1, 1999, remains valid until its validity expires under the regulations in effect prior to January 1, 2001 (see 26 CFR part 1, revised April 1, 1999) but in no event shall such a form remain valid after December 31, 2000. The rule in this paragraph (f)(2), however, does not apply to extend the validity period of a Form 8709 that expires solely by reason of changes in the circumstances of the person whose name is on the certificate. Notwithstanding the first three sentences of this paragraph (f)(2), a withholding agent may choose to not take advantage of the transition rule in this paragraph (f)(2) with respect to one or more withholding certificates valid under the regulations in effect prior to January 1, 2001 (see 26 CFR part 1, revised April 1, 1999) and, therefore, to require withholding certificates conforming to the requirements described in this section (new withholding certificates). For purposes of this section, a new withholding certificate is deemed to satisfy the documentation requirement under the regulations in effect prior to January 1, 2001 (see 26 CFR part 1, revised April 1, 1999). Further, a new withholding certificate remains valid for the period specified in §1.1441–1(e)(4)(ii), regardless of when the certificate is obtained.

[T.D. 8211, 53 FR 24066, June 27, 1988, as amended at T.D. 8211, 53 FR 27595, July 21, 1988; Redesignated and amended by T.D. 8734, 62 FR 53464, Oct. 14, 1997; T.D. 8804, 63 FR 72185, Dec. 31, 1998; 64 FR 73410, Dec. 30, 1999]

§1.1441–9 Exemption from withholding on exempt income of a foreign tax-exempt organization, including foreign private foundations.

(a) *Exemption from withholding for exempt income.* No withholding is required under section 1441(a) or 1442, and the regulations under those sections, on amounts paid to a foreign organization that is described in section 501(c) to the extent that the amounts are not income includable under section 512 in computing the organization's unrelated business taxable income. See, however, §1.1443–1 for withholding on payments of unrelated business income to foreign tax-exempt organizations and on payments subject to tax under section 4948. For a foreign organization to claim an exemption from withholding under section 1441(a) or 1442 based on its status as an organization described in section 501(c), it must furnish the withholding agent with a withholding certificate described in paragraph (b)(2) of this section. A foreign organization described in section 501(c) may choose to claim a reduced rate of withholding under the procedures described in other sections of the regulations under section 1441 and not under this section. In particular, if an organization chooses to claim benefits under an income tax treaty, the withholding procedures applicable to claims of such a reduced rate are governed solely by the provisions of §1.1441–6 and not of this section.

(b) *Reliance on foreign organization's claim of exemption from withholding*—(1) *General rule.* A withholding agent may rely on a claim of exemption under this section only if, prior to the payment, the withholding agent can reliably associate the payment with a valid withholding certificate described in paragraph (b)(2) of this section.

(2) *Withholding certificate.* A withholding certificate under this paragraph (b)(2) is valid only if it is a Form W–8 and if, in addition to other applicable requirements, the Form W–8 includes the taxpayer identifying number of the organization whose name is on the certificate, and it certifies that the Internal Revenue Service (IRS) has issued a favorable determination letter (and the date thereof) that is currently in effect, what portion, if any, of the amounts paid constitute income includible under section 512 in computing the organization's unrelated business taxable income, and, if the organization is described in section 501(c)(3), whether it is a private foundation described in section 509. Notwithstanding the preceding sentence, if the organization cannot certify that it has been issued a favorable determination letter that is still in effect, its withholding certificate is nevertheless valid under this paragraph (b)(2) if the organization attaches to the withholding certificate an opinion that is acceptable to the withholding agent from a U.S. counsel (or any other person as the IRS may prescribe in published guidance (see § 601.601(d)(2) of this chapter)) concluding that the organization is described in section 501(c). If the determination letter or opinion of counsel to which the withholding certificate refers concludes that the organization is described in section 501(c)(3), and the certificate further certifies that the organization is not a private foundation described in section 509, an affidavit of the organization setting forth sufficient facts concerning the operations and support of the organization for the Internal Revenue Service (IRS) to determine that such organization would be likely to qualify as an organization described in section 509(a)(1), (2), (3), or (4) must be attached to the withholding certificate. An organization that provides an opinion of U.S. counsel or an affidavit may provide the same opinion or affidavit to more than one withholding agent provided that the opinion is acceptable to each withholding agent who receives it in conjunction with a withholding certificate. Any such opinion of counsel or affidavit must be renewed whenever there is a change in facts or circumstances that are relevant to determine the organization's status under section 501(c) or, if relevant, that the organization is or is not a private foundation described in section 509.

(3) *Presumptions in the absence of documentation.* Notwithstanding paragraph (b)(1) of this section, if the organization's certification with respect to whether amounts paid constitute income includable under section 512 in computing the organization's unrelated business taxable income is not reliable or is lacking but all other certifications are reliable, the withholding agent may rely on the certificate but the amounts paid are presumed to be income includable under section 512 in computing the organization's unrelated business taxable income. If the certification regarding private foundation status is not reliable, the withholding agent may rely on the certificate but the amounts paid are presumed to be paid to a foreign beneficial owner that is a private foundation.

(4) *Reason to know.* Reliance by a withholding agent on the information and certifications stated on a withholding certificate is subject to the agent's actual knowledge or reason to know that such information or certification is incorrect as provided in § 1.1441–7(b). For example, a withholding agent must cease to treat a foreign organization's claim for exemption from withholding based on the organization's tax-exempt status as valid beginning on the earlier of the date on which such agent knows that the IRS has given notice to such foreign organization that it is not an organization described in section 501(c) or the date on which the IRS gives notice to the public that such foreign organization is not an organization described in section 501(c). Similarly, a withholding agent may no longer rely on a certification that an amount is not subject to tax under section 4948 beginning on the earlier of the date on which such agent knows that the IRS has given notice to such foreign organization that it is subject to tax under section 4948 or the date on which the IRS gives notice that such foreign organization is a private foundation within the meaning of section 509(a).

(c) *Failure to receive withholding certificate timely and other applicable procedures.* See applicable procedures described in §1.1441–1(b)(7) in the event the withholding agent does not hold a valid withholding certificate or other appropriate documentation at the time of payment. Further, the provisions of §1.1441–1(e)(4) shall apply to withholding certificates and other documents related thereto furnished under the provisions of this section.

(d) *Effective date*—(1) *In general.* This section applies to payments made after December 31, 2000.

(2) *Transition rules.* For purposes of this section, the validity of a Form W–8, 1001, or 4224 or a statement that was valid on January 1, 1998, under the regulations in effect prior to January 1, 2001 (see 26 CFR parts 1 and 35a, revised April 1, 1999) and expired, or will expire, at any time during 1998, is extended until December 31, 1998. The validity of a Form W–8, 1001, or 4224 or a statement that is valid on or after January 1, 1999 remains valid until its validity expires under the regulations in effect prior to January 1, 2001 (see 26 CFR parts 1 and 35a, revised April 1, 1999) but in no event shall such form or statement remain valid after December 31, 2000. The rule in this paragraph (d)(2), however, does not apply to extend the validity period of a Form W–8, 1001, or 4224 or a statement that expires solely by reason of changes in the circumstances of the person whose name is on the certificate. Notwithstanding the first three sentences of this paragraph (d)(2), a withholding agent may choose to not take advantage of the transition rule in this paragraph (d)(2) with respect to one or more withholding certificates valid under the regulations in effect prior to January 1, 2001 (see 26 CFR parts 1 and 35a, revised April 1, 1999) and, therefore, to require withholding certificates conforming to the requirements described in this section (new withholding certificates). For purposes of this section, a new withholding certificate is deemed to satisfy the documentation requirement under the regulations in effect prior to January 1, 2001 (see 26 CFR parts 1 and 35a, revised April 1, 1999). Further, a new withholding certificate remains valid for the period specified in §1.1441-1(e)(4)(ii), regardless of when the certificate is obtained.

[T.D. 8734, 62 FR 53465, Oct. 14, 1997, as amended by T.D. 8804, 63 FR 72185, Dec. 31, 1998; T.D. 8856, 64 FR 73410, Dec. 10, 1999; T.D. 8881, 65 FR 32201, May 22, 2000]

§1.1441–10 Withholding agents with respect to fast-pay arrangements.

(a) *In general.* A corporation that issues fast-pay stock in a fast-pay arrangement described in §1.7701(l)–3(b)(1) is a withholding agent with respect to payments made on the fast-pay stock and payments deemed made under the recharacterization rules of §1.7701(l)–3. Except as provided in this paragraph (a) or in paragraph (b) of this section, the withholding tax rules under section 1441 and section 1442 apply with respect to a fast-pay arrangement described in §1.7701(l)–3(c)(1)(i) in accordance with the recharacterization rules provided in §1.7701(l)–3(c). In all cases, notwithstanding paragraph (b) of this section, if at any time the withholding agent knows or has reason to know that the Commissioner has exercised the discretion under either §1.7701(l)–3(c)(1)(ii) to apply the recharacterization rules of §1.7701(l)–3(c), or §1.7701(l)–3(d) to depart from the recharacterization rules of §1.7701(l)–3(c) for a taxpayer, the withholding agent must withhold on payments made (or deemed made) to that taxpayer in accordance with the characterization of the fast-pay arrangement imposed by the Commissioner under §1.7701(l)–3.

(b) *Exception.* If at any time the withholding agent knows or has reason to know that any taxpayer entered into a fast-pay arrangement with a principal purpose of applying the recharacterization rules of §1.7701(l)–3(c) to avoid tax under section 871(a) or section 881, then for each payment made or deemed made to such taxpayer under the arrangement, the withholding agent must withhold, under section 1441 or section 1442, the higher of—

(1) The amount of withholding that would apply to such payment determined under the form of the arrangement; or

(2) The amount of withholding that would apply to deemed payments determined under the recharacterization rules of § 1.7701(l)–3(c).

(c) *Liability*. Any person required to deduct and withhold tax under this section is made liable for that tax by section 1461, and is also liable for applicable penalties and interest for failing to comply with section 1461.

(d) *Examples*. The following examples illustrate the rules of this section:

Example 1. REIT W issues shares of fast-pay stock to foreign individual A, a resident of Country C. United States source dividends paid to residents of C are subject to a 30 percent withholding tax. W issues all shares of benefited stock to foreign individuals who are residents of Country D. D's income tax convention with the United States reduces the United States withholding tax on dividends to 15 percent. Under § 1.7701(l)–3(c), the dividends paid by W to A are deemed to be paid by W to the benefited shareholders. W has reason to know that A entered into the fast-pay arrangement with a principal purpose of using the recharacterization rules of § 1.7701(l)–3(c) to reduce United States withholding tax. W must withhold at the 30 percent rate because the amount of withholding that applies to the payments determined under the form of the arrangement is higher than the amount of withholding that applies to the payments determined under § 1.7701(l)–3(c).

Example 2. The facts are the same as in *Example 1* of this paragraph (d) except that W does not know, or have reason to know, that A entered into the arrangement with a principal purpose of using the recharacterization rules of § 1.7701(l)–3(c) to reduce United States withholding tax. Further, the Commissioner has not exercised the discretion under § 1.7701(l)–3(d) to depart from the recharacterization rules of § 1.7701(l)–3(c). Accordingly, W must withhold tax at a 15 percent rate on the dividends deemed paid to the benefited shareholders.

(e) *Effective date*. This section applies to payments made (or deemed made) on or after January 6, 1999.

[T.D. 8853, 65 FR 1312, Jan. 10, 2000]

§ 1.1442–1 Withholding of tax on foreign corporations.

For regulations concerning the withholding of tax at source under section 1442 in the case of foreign corporations, foreign governments, international organizations, foreign tax-exempt corporations, or foreign private foundations, see §§ 1.1441–1 through 1.1441–9.

[T.D. 8734, 62 FR 53466, Oct. 14, 1997]

§ 1.1442–2 Exemption under a tax treaty.

For regulations providing for a claim of reduced withholding tax under section 1442 by certain foreign corporations pursuant to the provisions of an income tax treaty, see § 1.1441–6.

[T.D. 8734, 62 FR 53466, Oct. 14, 1997]

§ 1.1442–3 Tax exempt income of a foreign tax-exempt corporation.

For regulations providing for a claim of exemption for income exempt from tax under section 501(a) of a foreign tax-exempt corporation, see § 1.1441–9. See § 1.1443–1 for withholding rules applicable to foreign private foundations and to the unrelated business income of foreign tax-exempt organizations.

[T.D. 8734, 62 FR 53466, Oct. 14, 1997]

§ 1.1443–1 Foreign tax-exempt organizations.

(a) *Income includible in computing unrelated business taxable income*. In the case of a foreign organization that is described in section 501(c), amounts paid or effectively connected taxable income allocable to the organization that are includible under section 512 and section 513 in computing the organization's unrelated business taxable income are subject to withholding under §§ 1.1441–1, 1.1441–4, 1.1441–6, and 1.1446–1 through 1.1446–6, in the same manner as payments or allocations of effectively connected taxable income of the same amounts made to any foreign person that is not a tax-exempt organization. Therefore, a foreign organization receiving amounts includible under section 512 and section 513 in computing the organization's unrelated business taxable income may claim an exemption from withholding or a reduced rate of withholding with respect to that income in the same manner as a foreign person that is not a tax-exempt organization. See § 1.1441–9(b)(3) for a presumption that amounts are includible under section 512 and section 513 in computing the organization's unrelated business taxable income in the absence of reliable certification. See

also §1.1446–3(c)(3), applying this presumption in the context of section 1446.

(b) *Income subject to tax under section 4948*—(1) *In general.* The gross investment income (as defined in section 4940(c)(2)) of a foreign private foundation is subject to withholding under section 1443(b) at the rate of 4 percent to the extent that the income is from sources within the United States and is subject to the tax imposed by section 4948(a) and the regulations under that section. Withholding under this paragraph (b) is required irrespective of the fact that the income may be effectively connected with the conduct of a trade or business in the United States by the foreign organization. See §1.1441–9(b)(3) for applicable presumptions that amounts are subject to tax under section 4948. The withholding imposed under this paragraph (b)(1) does not obviate a private foundation's obligation to file any return required by law with respect to such organization, such as the form that the foundation is required to file under section 6033 for the taxable year.

(2) *Reliance on a foreign organization's claim of foreign private foundation status.* For reliance by a withholding agent on a foreign organization's claim of foreign private foundation status, see §1.1441–9 (b) and (c).

(3) *Applicable procedures.* A withholding agent withholding the 4-percent amount pursuant to paragraph (b)(1) of this section shall treat such withholding as withholding under section 1441(a) or 1442(a) for all purposes, including reporting of the payment on a Form 1042 and a Form 1042–S pursuant to §1.1461–1 (b) and (c). Similarly, the foreign private foundation shall treat the 4-percent withholding as withholding under section 1441(a) or 1442(a), including for purposes of claims for refunds and credits.

(4) *Claim of benefits under an income tax treaty.* The withholding procedures applicable to claims of a reduced rate under an income tax treaty are governed solely by the provisions of §1.1441–6 and not by this section.

(c) *Effective date*—(1) *In general.* This section applies to payments made after December 31, 2000, except that the references in paragraph (a) of this section to effectively connected taxable income and withholding under section 1446 shall apply to partnership taxable years beginning after May 18, 2005, or such earlier time as the regulations under §§1.1446–1 through 1.1446–5 apply by reason of an election under §1.1446–7.

(2) *Transition rules.* For purposes of this section, the validity of an affidavit or opinion of counsel described in §1.1443–1(b)(4)(i) in effect prior to January 1, 2001 (see §1.1443–1(b)(4)(i) as contained in 26 CFR part 1, revised April 1, 1999) is extended until December 31, 2000. However, a withholding agent may choose to not take advantage of the transition rule in this paragraph (c)(2) with respect to one or more withholding certificates valid under the regulations in effect prior to January 1, 2001 (see 26 CFR part 1, revised April 1, 1999) and, therefore, to require withholding certificates conforming to the requirements described in this section (new withholding certificates). For purposes of this section, a new withholding certificate is deemed to satisfy the documentation requirement under the regulations in effect prior to January 1, 2001 (see 26 CFR part 1, revised April 1, 1999). Further, a new withholding certificate remains valid for the period specified in §1.1441–1(e)(4)(ii), regardless of when the certificate is obtained.

[T.D. 8734, 62 FR 53466, Oct. 14, 1997, as amended by T.D. 8804, 63 FR 72186, Dec. 31, 1998; T.D. 8856, 64 FR 73411, Dec. 30, 1999; T.D. 9200, 70 FR 28717, May 18, 2005; T.D. 9394, 73 FR 23074, Apr. 29, 2008]

§1.1445–1 Withholding on dispositions of U.S. real property interests by foreign persons: In general.

(a) *Purpose and scope of regulations.* These regulations set forth rules relating to the withholding requirements of section 1445. In general, section 1445(a) provides that any person who acquires a U.S. real property interest from a foreign person must withhold a tax of 10 percent from the amount realized by the transferor foreign person (or a lesser amount established by agreement with the Internal Revenue Service). Section 1445(e) provides special rules requiring withholding on distributions

and certain other transactions by corporations, partnerships, trusts, and estates. This §1.1445–1 provides general rules concerning the withholding requirement of sections 1445(a), as well as definitions applicable under both section 1445(a) and 1445(e). Section 1.1445–2 provides for various situations in which withholding is not required under section 1445(a). Section 1.1445–3 provides for adjustments to the amount required to be withheld by transferees under section 1445(a). Section 1.1445–4 prescribes the duties of agents in transactions subject to withholding under either section 1445(a) or 1445(e). Section 1.1445–5 provides rules concerning the withholding required under section 1445(e), while §1.1445–6 provides for adjustments to the amount required to be withheld under section 1445(e). Finally, §1.1445–7 provides rules concerning the treatment of a foreign corporation that has made an election under section 897(i) to be treated as a domestic corporation.

(b) *Duty to withhold*—(1) *In general.* Transferees of U.S. real property interests are required to deduct and withhold a tax equal to 10 percent of the amount realized by the transferor, if the transferor is a foreign person and the disposition takes place on or after January 1, 1985. Neither the transferee's duty to withhold nor the amount required to be withheld is affected by the amount of cash to be paid by the transferee. Amounts withheld must be reported and paid over in accordance with the requirements of paragraph (c) of this section. Failures to withhold and pay over are subject to the liabilities set forth in paragraph (e) of this section. If two or more persons are joint transferees of a U.S. real property interest, each such person is subject to the obligation to withhold. That obligation is fulfilled with respect to each such person if any one of them withholds and pays over the required amount in accordance with the rules of this section. If the amount realized (as defined in paragraph (g)(5) of this section) by the transferor is zero, then no withholding is required. For example, if a real property interest is transferred as a gift (i.e, the recipient does not assume any liabilities or furnish any other consideration to the transferor) then no withholding is required. Withholding is not required with respect to dispositions that takes place before January 1, 1985, even if the first payment of consideration is made after December 31, 1984.

(2) *U.S. real property interest owned jointly by foreign and non-foreign transferors.* The amount subject to withholding under paragraph (b)(1) of this section with respect to the transfer of a U.S. real property interest owned by one or more foreign persons (as defined in §1.897–1(k)) and one or more non-foreign persons shall be determined by allocating the amount realized from the transfer between (or among) such transferors based upon the capital contribution of each transferor with respect to the property and by aggregating the amounts allocated to any foreign person (or persons). For this purpose, a husband and wife will each be deemed to have contributed 50 percent of the aggregate capital contributed by such husband and wife. See §1.1445–1(f)(3)(iv) with respect to the crediting of the amount withheld between or among joint foreign transferors.

(3) *Options to acquire a U.S. real property interest*—(i) *No withholding on grant of option.* No withholding is required under section 1445 with respect to any amount realized by the grantor on the grant of an option to acquire a U.S. real property interest.

(ii) *No withholding upon lapse of option.* No withholding is required under section 1445 with respect to any amount realized by the grantor upon the lapse of an option to acquire a U.S. real property interest.

(iii) *Withholding required upon the sale or exchange of option.* A transferee of an option to acquire a U.S. real property interest must deduct and withhold a tax equal to 10 percent of the amount realized by the transferor upon the disposition. This §1.1445–1(b)(3)(iii) does not apply to require withholding upon the initial grant of an option.

(iv) *Withholding required on exercise of option.* If the holder exercises an option to purchase a U.S. real property interest, the amount paid for the option shall be considered an amount realized by the grantor/transferor upon the transfer of the property with respect to

which the option was granted, and shall thus be subject to withholding on the day that such underlying property is transferred. The preceding sentence applies regardless of whether or not the terms of the option specifically provide that the option price is applied to the purchase price.

(4) Exceptions and modifications. The duty to withhold under section 1445(a) is subject to the exceptions and modifications contained in §§1.1445–2 and 1.1445–3. Generally, §1.1445–2 provides rules for determining that withholding is not required because either the transferor is not a foreign person or the interest transferred is not a U.S. real property interest. In addition, §1.1445–2 provides exceptions to the withholding requirement, including a rule that exempts from withholding any person who acquires a U.S. real property interest for use as a residence for a contract price of $300,000 or less. If withholding is required under section 1445(a), §1.1445–3 allows the amount withheld to be modified pursuant to a withholding certificate issued by the Internal Revenue Service. If a transferee cannot withhold the full amount required because the first payment of consideration for the transfer does not involve sufficient cash (or other liquid assets convertible into cash, such as foreign currency), then a withholding certificate must be obtained pursuant to §1.1445–3.

(c) *Reporting and paying over of withheld amounts*—(1) *In general.* A transferee must report and pay over any tax withheld by the 20th day after the date of the transfer. Forms 8288 and 8288–A are used for this purpose, and must be filed at the location as provided in the instructions to Forms 8288 and 8288–A. Pursuant to section 7502 and regulations thereunder, the timely mailing of Forms 8288 and 8228–A will be treated as their timely filing. Form 8288–A will be stamped by the IRS to show receipt, and a stamped copy will be mailed by the IRS to the transferor (at the address reported on the form) for the transferor's use. See §§1.1445–1(f) and 1.1445–3(f). Forms 8288 and 8288–A are required to include the identifying numbers of both the transferor and the transferee, as provided in paragraph (d) of this section. If any identifying number as required by such forms is not provided, the transferee must still report and pay over any tax withheld on Form 8288, although the transferor cannot obtain a credit or refund of tax on the basis of a Form 8288–A that does not include the transferor's identifying number (see paragraph (f)(2) of this section).

(2) *Pending application for withholding certificate*—(i) *In general. (A) Delayed reporting and payment with respect to application submitted by transferee.* If an application for a withholding certificate with respect to a transfer of a U.S. real property interest is submitted to the Internal Revenue Service by the transferee on the day of or at any time prior to the transfer, the transferee must withhold 10 percent of the amount realized as required by paragraph (b) of this section. However, the amount withheld, or a lesser amount as determined by the Service, need not be reported and paid over to the Service until the 20th day following the Service's final determination with respect to the application for a withholding certificate. For this purpose, the Service's final determination occurs on the day when the withholding certificate is mailed to the transferee by the Service or when a notification denying the request for a withholding certificate is mailed to the transferee by the Service. An application is submitted to the Service on the day it is actually received by the Service at the address provided in §1.1445–1(g)(10) or, under the rules of section 7502, on the day it is mailed to the Service at the address provided in §1.1445–1(g)(10).

(B) *Delayed reporting and payment with respect to application submitted by transferor.* If an application for a withholding certificate with respect to a transfer of a U.S. real property interest is submitted to the Internal Revenue Service by the Transferor on the day of or any time prior to the transfer, such transferor must provide notice to the transferee prior to the transfer. No particular form is required but the notice must set forth the name, address, and taxpayer identification number of the transferor, a brief description of the property which is the subject of the application, and the date the application was submitted to the Service. The

transferee must withhold 10 percent of the amount realized as required in paragraph (b) of this section but need not report or pay over to the Service such amount (or a lesser amount as determined by the Service) until the 20th day following the Service's final determination with respect to the application. The Service will send a copy of the withholding certificate or copy of the notification denying the request for a withholding certificate to the transferee. For this purpose, the Service's final determination will be deemed to occur on the day when the copy of the withholding certificate or the copy of the notification denying the request for a withholding certificate is mailed by the Service to the transferee (or transferees). An application is submitted to the Service on the day it is actually received by the Service at the address provided in §1.1445–1(g)(10) or, under the rules of §7502, on the day it is mailed to the Service at the address provided in §1.1445–1(g)(10).

(ii) *Anti-abuse rule*—(A) *In general.* A transferee that in reliance upon the rules of this paragraph (c)(2) fails to report and pay over amounts withheld by the 20th day following the date of the transfer, shall be subject to the payment of interest and penalties if the relevant application for a withholding certificate (or an amendment to the application for a withholding certificate) was submitted for a principal purpose of delaying the transferee's payment to the IRS of the amount withheld. Interest and penalties shall be assessed on the amount that is ultimately paid over (or collected pursuant to the agreement) with respect to the period between the 20th day after the date of the transfer and the date on which payment is made (or collected).

(B) *Presumption.* A principal purpose of delaying payment of the amount withheld shall be presumed if—

(*1*) The transferee applies for a withholding certificate pursuant to §1.1445–3(c) based on a determination of the transferor's maximum tax liability, and

(*2*) Such liability is ultimately determined to be equal to 90 percent or more of the amount that was otherwise required to be withheld and paid over. However, the presumption created by the previous sentence may be rebutted by evidence establishing that delaying payment of the amount withheld was not a principal purpose of the transaction.

(d) *Contents of Forms 8288 and 8288–A*—(1) *Transactions subject to section 1445(a).* Any person that is required to file Forms 8288 and 8288–A pursuant to section 1445(a) and the rules of this section must set forth thereon the following information:

(i) The name, identifying number, and home address (in the case of an individual) or office address (in the case of any entity) of the transferee(s) filing the return;

(ii) The name, identifying number, and home address (in the case of an individual) or office address (in the case of any entity) of the transferor(s);

(iii) A brief description of the U.S. real property interest transferred, including its location and the nature of any substantial improvements in the case of real property, and the class or type and amount of interests transferred in the case of interests in a corporation that constitute U.S. real property interests;

(iv) The date of the transfer;

(v) The amount realized by the transferor, as defined in paragraph (g)(5) of this section;

(vi) The amount withheld by the transferee and whether withholding is at the statutory or reduced rate; and

(vii) Such other information as the Commissioner may require.

For purposes of paragraph (d)(1) (i) and (ii), mailing addresses may be provided in addition to, but not in lieu of, home addresses or office addresses.

(2) *Transactions subject to section 1445(e).* Any person that is required to file Forms 8288 and 8288–A pursuant to the rules of §1.1445–5 must set forth thereon the following information:

(i) The name, identifying number, and office address of the entity or fiduciary filing the return;

(ii) The amount withheld by the entity or fiduciary;

(iii) The date of the transfer;

(iv) In the case of a transaction subject to withholding pursuant to section 1445(e)(1) and §1.1445–5(c):

(A) A brief description of the U.S. real property interest transferred, as

described in paragraph (d)(1)(iii) of this section;

(B) The name, identifying number, and home address (in the case of an individual) or office address (in the case of an entity) of each holder of an interest in the entity that is a foreign person; and

(C) Each such interest-holder's pro rata share of the amount withheld;

(v) In the case of a distribution subject to withholding pursuant to section 1445(e)(2) and § 1.1445–5(d):

(A) A brief description of the U.S. real property interest transferred, as described in paragraph (d)(1)(iii) of this section; and

(B) The amount of gain recognized upon the distribution by the corporation.

(vi) In the case of a distribution subject to withholding pursuant to section 1445(e)(3) and § 1.1445–5(e):

(A) A brief description of the property distributed by the corporation;

(B) The name, identifying number, and home address (in case of an individual) or office address (in the case of an entity) of each holder of an interest in the entity that is a foreign person;

(C) The amount realized upon the distribution by each such foreign interest holder; and

(D) Each foreign interest-holder's pro rata share of the amount withheld; and

(vii) Such other information as the Commissioner may require.

(e) *Liability of transferee upon failure to withhold*—(1) *In general.* Every person required to deduct and withhold tax under section 1445 is made liable for that tax by section 1461. Therefore, a person that is required to deduct and withhold tax but fails to do so may be held liable for the payment of the tax and any applicable penalties and interest.

(2) *Transferor's liability not otherwise satisfied*—(i) *Tax and penalties.* Except as provided in paragraph (e)(3) of this section, if a transferee is required to deduct and withhold tax under section 1445 but fails to do so, then the tax shall be assessed against and collected from that transferee. Such person may also be subject to any of the civil and criminal penalties that apply. Corporate officers or other responsible persons may be subject to a civil penalty under section 6672 equal to the amount that should have been withheld and paid over.

(ii) *Interest.* If a transferee is required to deduct and withhold tax under section 1445 but fails to do so, then such transferee shall be liable for the payment of interest pursuant to section 6601 and the regulations thereunder. Interest shall be payable with respect to the period between—

(A) The last date on which the tax imposed under section 1445 was required to be paid over by the transferee, and

(B) The date on which such tax is actually paid. Interest shall be payable with respect to the entire amount that is required to be deducted and withheld. However, if the Service issues a withholding certificate providing for withholding of a reduced amount, then, for the period after the issuance of the certificate, interest shall be payable with respect to that reduced amount.

(3) *Transferor's liability otherwise satisfied*—(i) *Tax and penalties.* If a transferee is required to deduct and withhold tax under section 1445 but fails to do so, and the transferor's tax liability with respect to the transfer was satisfied (or was established to be zero) by—

(A) The transferor's filing of an income tax return (and payment of any tax due) with respect to the transfer, or

(B) The issuance of a withholding certificate by the Internal Revenue Service establishing that the transferor's maximum tax liability is zero,

then the tax required to be withheld under section 1445 shall not be collected from the transferee. Such transferee's liability for tax, and the requirement that such person file Forms 8288 and 8288–A, shall be deemed to have been satisfied as of the date on which the transferor's income tax return was filed or the withholding certificate was issued. No penalty shall be imposed on or collected from such person for failure to return or pay the tax, unless such failure was fraudulent and for the purpose of evading payment. A transferee that seeks to avoid liability for tax and penalties pursuant to the rule of paragraph (e)(3)(i) must provide sufficient information for the Service to determine whether the transferor's

tax liability was satisfied (or was established to be zero).

(ii) *Interest.* If a transferee is required to deduct and withhold tax under section 1445 but fails to do so, then such person shall be liable for the payment of interest under section 6601 and regulations thereunder. Such transferee's liability for the payment of interest shall not be excused by reason of the deemed satisfaction, pursuant to subdivision (i) of this paragraph (e)(3), of the transferee's liability under section 1445, because the deemed satisfaction of that liability is the equivalent of the late payment of a liability, on which interest must be paid. Interest shall be payable with respect to the period between—

(A) The last date on which the tax imposed under section 1445 was required to be paid over, and

(B) The date (established from information supplied to the Service by the transferee) on which any tax due is paid with respect to the transferor's relevant income tax return, or the date the withholding certificate is issued establishing that the transferor's maximum tax liability is zero.

Interest shall be payable with respect to the entire amount that is required to be deducted and withheld. However, if the Service issues a withholding certificate providing for withholding of a reduced amount, then for the period after the issuance of the certificate interest shall be payable with respect to that reduced amount.

(4) *Coordination with entity with holding rules.* For purposes of section 1445(e) and §§1.1445–5, 1.1445–6, 1.1445–7, and 1.1445–8T, the rules of this paragraph (e) shall be applied by—

(i) Substituting the words ''person required to withhold'' for the word ''transferee'' each place it appears in this paragraph (e), and

(ii) Substituting the words ''person subject to withholding'' for the word ''transferor'' each place it appears in this paragraph (e).

(f) *Effect of withholding on transferor*—(1) *In general.* The withholding of tax under section 1445(a) does not excuse a foreign person that disposes of a U.S. real property interest from filing a U.S. tax return with respect to the income arising from the disposition. Form 1040NR, 1041, or 1120F, as appropriate, must be filed, and any tax due must be paid, by the filing deadline generally applicable to such person. (The return may be filed by such later date as is provided in an extension granted by the Internal Revenue Service.) Any tax withheld under section 1445(a) shall be credited against the amount of income tax as computed in such return.

(2) *Manner of obtaining credit or refund.* A stamped copy of Form 8288–A will be provided to the transferor by the Service (under paragraph (c) of this section) if the Form 8288–A is complete, including the transferor's identifying number. Except as provided in paragraph (f)(3) of this section, a stamped copy of Form 8288–A must be attached to the transferor's return to establish the amount withheld that is available as a credit. If the amount withheld under section 1445(a) constitutes less than the full amount of the transferor's U.S. tax liability for that taxable year, then a payment of estimated tax may be required to be made pursuant to section 6154 or 6654 prior to the filing of the income tax return for that year. Alternatively, if the amount withheld under section 1445(a) exceeds the transferor's maximum tax liability with respect to the disposition (as determined by the IRS), then the transferor may seek an early refund of the excess pursuant to §1.1445–3(g), or a normal refund upon the filing of a tax return.

(3) *Special rules*—(i) *Failure to receive Form 8288–A.* If a stamped copy of Form 8288–A has not been provided to the transferor by the Service, the transferor may establish the amount of tax withheld by the transferee by attaching to its return substantial evidence (e.g., closing documents) of such amount. Such a transferor must attach to its return a statement which supplies all of the information required by §1.1445–1(d), including the transferor's identifying number.

(ii) *U.S. persons subjected to withholding.* If a transferee withholds tax under section 1445(a) with respect to a person who is not a foreign person, such person may credit the amount of any tax withheld against his income tax liability in accordance with the

provisions of this §1.1145–1(f) or apply for an early refund under §1.1445–3(g).

(iii) *Refund in case of installment sale.* A transferor that takes gain into account in accordance with the provisions of section 453 shall not be entitled to a refund of the amount withheld, unless a withholding certificate providing for such a refund is obtained from the Internal Revenue Service pursuant to the provisions of §1.1445–3.

(iv) *Joint foreign transferors.* If two or more foreign persons jointly transfer a U.S. real property interest, each transferor shall be credited with such portion of the amount withheld as such transferors mutually agree. Such transferors must request that the transferee reflect the agreed-upon crediting of the amount withheld on the Forms 8288–A filed by the transferee. If the foreign transferors fail to request that the transferee reflect the agreed-upon crediting of the amount withheld by the 10th day after the date of transfer, the transferee must credit the amount withheld equally between (or among) the foreign transferors. In such case, the transferee is indemnified pursuant to section 1461 against any claim by a transferor objecting to the resulting division of credits. For rules regarding the amount realized allocated to joint foreign and non-foreign transferors, see §1.1445–1(b)(2).

(g) *Definitions*—(1) *In general.* Unless otherwise specified, the definitions of terms provided in §1.897–1 shall apply for purposes of this section and §§1.1445–2 through 1.1445–7. For purposes of section 1445 and the regulations thereunder, definitions of other relevant terms are provided in this paragraph (g). In addition, the term ''residence'' is defined in 1.1445–2(d)(1), the terms ''transferor's agent'' and ''transferee's agent'' are defined in 1.1445–4(f), and the term ''relevant taxpayer'' is defined in 1.1445–6(a)(2).

(2) *Transfer.* The term ''transfer'' means any transaction that would constitute a disposition for any purpose, of the Internal Revenue Code and regulations thereunder. For purposes of §§1.1445–5 and 1.1445–6, the term includes distribution to shareholders of a corporation, partners of a partnership and beneficiaries of a trust or estate.

(3) *Transferor.* The term ''transferor'' means any person, foreign or domestic, that disposes of a U.S. real property interest by sale, exchange, gift, or any other transfer. The term ''U.S. real property interest'' is defined in §1.897–1(c).

(4) *Transferee.* The term ''transferee'' means any person, foreign or domestic, that acquires a U.S. real property interest by purchase, exchange, gift, or any other transfer.

(5) *Amount realized.* The amount realized by the transferor for the transfer of a U.S. real property interest is the sum of.

(i) The cash paid, or to be paid.

(ii) The fair market value of other property transferred, or to be transferred, and

(iii) The outstanding amount of any liability assumed by the transferee or to which the U.S. real property interest is subject immediately before and after the transfer.

The term ''cash paid or to be paid'' does not include stated or unstated interest or original issue discount (as determined under the rules of sections 1271 through 1275).

(6) *Contract price.* The contract price of a U.S. real property interest is the sum that is agreed to by the transferee and transferor as the total amount of consideration to be paid for the property. That amount will generally be equal to the amount realized by the transferor, as defined in paragraph (b)(5) of this section.

(7) *Fair market value.* The fair market value of property means the price at which the property would change hands between an unrelated willing buyer and willing seller, neither being under any compulsion to buy or to sell and both having reasonable knowledge of all relevant facts.

(8) *Date of transfer.* The date of transfer of a U.S. real property interest is the first date on which consideration is paid (or a liability assumed) by the transferee. However, for purposes of section 1445(e) (2), (3), and (4) and §§1.1445–5(c)(1)(iii) and 1.1445–5(c)(3) only, the date of transfer is the date of the distribution that gives rise to the obligation to withhold. For purposes of this paragraph (g)(8), the payment of

consideration does not include the payment, prior to the passage of legal or equitable title (other than pursuant to an initial contract for purchase), of earnest money, a good-faith deposit, or any similar sum that is primarily intended to bind the transferee or transferor to the entering or performance of a contract. Such a payment will not constitute a payment of consideration solely because it may ultimately be applied against the amount owed to the transferor by the transferee. Such a payment is presumed to be earnest money, a good faith deposit, or a similar sum if it is subject to forfeiture in the event of a failure to enter into a contract or a breach of contract. However, a payment that is not forefeitable may nevertheless be found to constitute earnest money, a good faith deposit, or a similar sum.

(9) *Identifying number*. Pursuant to § 1.897–1(p), an individual's identifying number is the social security number or the identification number assigned by the Internal Revenue Service (see § 301.6109–1 of this chapter). The identifying number of any other person is its United States employer identification number.

(10) *Address of the Director, Philadelphia Service Center*. Any written communication directed to the Director, Philadelphia Service Center is to be addressed as follows: P.O. Box 21086, Drop Point 8731, FIRPTA Unit, Philadelphia, PA 19114–0586.

(h) *Effective date for taxpayer identification numbers*. The requirement in paragraphs (c)(2)(i)(B), (d)(1)(i) and (ii), (d)(2)(i), (d)(2)(iv)(B), and (d)(2)(vi)(B) of this section that taxpayer identification numbers be provided (in all cases) is applicable for dispositions of U.S. real property interests occurring after November 3, 2003.

[T.D. 8113, 51 FR 46629, Dec. 24, 1986; 52 FR 3796, 3916, Feb. 6, 1987, as amended by T.D. 8647, 60 FR 66076, Dec. 21, 1995; T.D. 9082, 68 FR 46084, Aug. 5, 2003]

§ 1.1445–2 Situations in which withholding is not required under section 1445(a).

(a) *Purpose and scope of section*. This section provides rules concerning various situations in which withhold is not required under section 1445(a). In general, a transferee has a duty to withhold under section 1445(a) only if both of the following are true:

(1) The transferor is a foreign person; and

(2) The transferee is acquiring a U.S. real property interest.

Thus, paragraphs (b) and (c) of this section provide rules under which a transferee of property can ascertain that he has no duty to withhold because one or the other of the two key elements is missing. Under paragraph (b), a transferee may determine that no withholding is required because the transferor is not a foreign person. Under paragraph (c), a transferee may determine that no withholding is required because the property acquired is not a U.S. real property interest. Finally, paragraph (d) of this section provides rules concerning exceptions to the withholding requirement.

(b) *Transferor not a foreign person*—(1) *In general*. No withholding is required under section 1445 if the transferor of a U.S. real property interest is not a foreign person. Therefore, paragraph (b)(2) of this section provides rules pursuant to which the transferor can provide a certification of non-foreign status to inform the transferee that withholding is not required. A transferee that obtains such a certification must retain that document for five years, as provided in paragraph (b)(3) of this section. Except to the extent provided in paragraph (b)(4) of this section, the obtaining of this certification excuses the transferee from any liability otherwise imposed by section 1445 and § 1.1445–1(e). However, section 1445 and the rules of this section do not impose any obligation upon a transferee to obtain a certification from the transferor, thus, a transferee may instead rely upon other means to ascertain the non-foreign status of the transferor. If, however, the transferee relies upon other means and the transferor was, in fact, a foreign person, then the transferee is subject to the liability imposed by section 1445 and § 1.1445–1(e).

A transferee is in no event required to rely upon other means to ascertain the non-foreign status of the transferor and may demand a certification of non-foreign status. If the certification is

not provided, the transferee may withhold tax under section 1445 and will be considered, for purposes of sections 1461 through 1463, to have been required to withhold such tax.

(2) *Transferor's certification of non-foreign status*—(i) *In general.* A transferee of a U.S. real property interest is not required to withhold under section 1445(a) if, prior to or at the time of the transfer, the transferor furnishes to the transferee a certification that—

(A) States that the transferor is not a foreign person.

(B) Sets forth the transferor's name, identifying number and home address (in the case of an individual) or office address (in the case of an entity), and

(C) Is signed under penalties of perjury.

In general, a foreign person is a nonresident alien individual, foreign corporation, foreign partnership, foreign trust, or foreign estate, but not a resident alien individual. In this regard, see §1.897–1(k). However, a foreign corporation that has made a valid election under section 897(i) is generally not treated as a foreign person for purposes of section 1445. In this regard, see §1.1445–7. Pursuant to §1.897–1(p), an individual's identifying number is the individual's Social Security number and any other person's identifying number is its U.S. employer identification number. A certification pursuant to this paragraph (b) must be vertified as true and signed under penalties of perjury by a responsible officer in the case of a corporation, by a general partner in the case of a partnership, and by a trustee, executor, or equivalent fiduciary in the case of a trust or estate. No particular form is needed for a certification pursuant to this paragraph (b), nor is any particular language required, so long as the document meets the requirements of this paragraph (b)(2)(i). Samples of acceptable certifications are provided in paragraph (b)(2)(iii) of this section.

(ii) *Foreign corporation that ''has made election under section 897(i).* A foreign corporation that has made a valid election under section 897(i) to be treated as a domestic corporation for purposes of section 897 may provide a certification of non-foreign status pursuant to this paragraph (b)(2). However, an electing foreign corporation must attach to such certification a copy of the acknowledgment of the election provided to the corporation by the Internal Revenue Service pursuant to §1.897–3(d)(4).

An acknowledgment is valid for this purpose only if it states that the information required by §1.897–3 has been determined to be complete.

(iii) *Disregarded entities.* A disregarded entity may not certify that it is the transferor of a U.S. real property interest, as the disregarded entity is not the transferor for U.S. tax purposes, including sections 897 and 1445. Rather, the owner of the disregarded entity is treated as the transferor of property and must provide a certificate of non-foreign status to avoid withholding under section 1445. A disregarded entity for these purposes means an entity that is disregarded as an entity separate from its owner under §301.7701–3 of this chapter, a qualified REIT subsidiary as defined in section 856(i), or a qualified subchapter S subsidiary under section 1361(b)(3)(B). Any domestic entity must include in its certification of non-foreign status with respect to the transfer a certification that it is not a disregarded entity. This paragraph (b)(2)(iii) and the sample certification provided in paragraph (b)(2)(iv)(B) of this section (to the extent it addresses disregarded entities) is applicable for dispositions occurring September 4, 2003.

(iv) *Sample certifications*—(A) *Individual transferor.*

''Section 1445 of the Internal Revenue Code provides that a transferee (buyer) of a U.S. real property interest must withhold tax if the transferor (seller) is a foreign person. To inform the transferee (buyer) that withholding of tax is not required upon my disposition of a U.S. real property interest, I, [*name of transferor*], hereby certify the following:

1. I am not a nonresident alien for purposes of U.S. income taxation;

2. My U.S. taxpayer identifying number [Social Security number] is _____; and

3. My home address is:

_____

_____

I understand that this certification may be disclosed to the Internal Revenue Service by the transferee and that any false statement I have made here could be punished by fine, imprisonment, or both.

Under penalties of perjury I declare that I have examined this certification and to the best of my knowledge and belief it is true, correct, and complete. [Signature and Date]''

(B) *Entity transferor.*

''Section 1445 of the Internal Revenue Code provides that a transferee of a U.S. real property interest must withhold tax if the transferor is a foreign person. For U.S. tax purposes (including section 1445), the owner of a disregarded entity (which has legal title to a U.S. real property interest under local law) will be the transferor of the property and not the disregarded entity. To inform the transferee that withholding of tax is not required upon the disposition of a U.S. real property interest by [name of transferor] , the undersigned hereby certifies the following on behalf of [name of the transferor]:

1. [Name of transferor] is not a foreign corporation, foreign partnership, foreign trust, or foreign estate (as those terms are defined in the Internal Revenue Code and Income Tax Regulations);

2. [Name of transferor] is not a disregarded entity as defined in §1.1445–2(b)(2)(iii);

3. [Name of transferor]'s U.S. employer identification number is _____; and

4. [Name of transferor]'s office address is _____.

[Name of transferor] understands that this certification may be disclosed to the Internal Revenue Service by transferee and that any false statement contained herein could be punished by fine, imprisonment, or both.

Under penalties of perjury I declare that I have examined this certification and to the best of my knowledge and belief it is true, correct, and complete, and I further declare that I have authority to sign this document on behalf of [name of transferor].

[Signature(s) and date]

[Title(s)]''

(3) *Transferee must retain certification.* If a transferee obtains a transferor's certification pursuant to the rules of this paragraph (b), then the transferee must retain that certification until the end of the fifth taxable year following the taxable year in which the transfer takes place. The transferee must retain the certification, and make it avaliable to the Internal Revenue Service when requested in accordance with the requirements of section 6001 and regulations thereunder.

(4) *Reliance upon certification not permitted*—(i) *In general.* A transferee may not rely upon a transferor's certification pursuant to this paragraph (b) under the circumstances set forth in either subdivision (ii) or (iii) of this paragraph (b)(4). In either of those circumstances, a transferee's withholding obligation shall apply as if a certification had never been obtained, and the transferee is fully liable pursuant to section 1445 and §1.1445–1(e) for any failure to withhold.

(ii) *Failure to attach IRS acknowledgment of election.* A transferee that knows that the transferor is a foreign corporation may not rely upon a certification of non-foreign status provided by the corporation on the basis of election under section 897(i), unless there is attached to the certification a copy of the acknowledgment by the Internal Revenue Service of the corporation's election, as required by paragraph (b)(2)(ii) of this section.

(iii) *Knowledge of falsity.* A transferee is not entitled to rely upon a transferor's certification if prior to or at the time of the transfer the transferee either—

(A) Has actual knowledge that the transferor's certification is false; or

(B) Receives a notice that the certification is false from a transferor's or transferee's agent, pursuant to §1.1445–4.

(iv) *Belated notice of false certification.* If after the date of the transfer a transferee receives a notice that a certification is false, then that transferee is entitled to rely upon the certification only with respect to consideration that was paid prior to receipt for the notice. Such a transferee is required to withhold a full 10 percent of the amount realized from the consideration that remains to be paid to the transferor if possible. Thus, if 10 percent or more of the amount reailzed remains to be paid to the transferor then the transferee is required to withhold and pay over the full 10 percent. The transferee must do so by withholding and paying over the entire amount of each successive payment of consideration to the transferor until the full 10 percent of the amount realized has been withheld and paid over. Amounts so withheld must be reported and paid over by the 20th day following the date on which each such payment of consideration is made. A transferee that is subject to the rules of this paragraph (b)(4)(iv) may not obtain a withholding certificate pursuant to §1.1445–3, but must instead withhold

and pay over the amounts required by this paragraph.

(c) *Transferred property not a U.S. real property interest*—(1) *In general.* No withholding is required under section 1445 if the transferee acquires only property that is not a U.S. real property interest. As defined in section 897(c) and § 1.897–1(c), a U.S. real property interest includes certain interests in U.S. corporations, as well as direct interests in real property and certain associated personal property. This paragraph (c) provides rules pursuant to which a person acquiring an interest in a U.S. corporation may determine that withholding is not required because that interest is not a U.S. real property interest. To determine whether an interest in tangible property constitutes a U.S. real property interest the acquisition of which would be subject to withholding, see § 1.897–1 (b) and (c).

(2) *Interests in publicly traded entities.* No withholding is required under section 1445(a) upon the acquisition of an interest in a domestic corporation if any class of stock of the corporation is regularly traded on an established securities market.

This exemption shall apply if the disposition is incident to an initial public offering of stock pursuant to a registration statement filed with the Securities and Exchange Commission. Similarly, no withholding is required under section 1445(a) upon the acquisition of an interest in a publicly traded partnership or trust. However, the rule of this paragraph (c)(2) shall not apply to the acquisition, from a single transferor in a single (or related transferors (as defined in § 1.897–1(i)) transaction (or related transactions), of an interest described in § 1.897–1(c)(2)(iii)(B) (relating to substantial amounts of non-publicly traded interests in publicly traded corporations) or to similar interests in publicly traded partnerships or trusts. The person making an acquisition described in the preceding sentence must otherwise determine whether withholding is required, pursuant to section 1445 and the regulations thereunder. Transactions shall be deemed to be related if they are undertaken within 90 days of one another or if it can otherwise be shown that they were undertaken in pursuance of a prearranged plan.

(3) *Transferee receives statement that interest in corporation is not a U.S. real property interest*—(i) *In general.* No withholding is required under section 1445(a) upon the acquisition of an interest in a domestic corporation, if the tranferor provides the transferee with a copy of a statement, issued by the corporation pursuant to § 1.897–2(h), certifying that the interest is not a U.S. real property interest. In general, a corporation may issue such a statement only if the corporation was not a U.S. real property holding corporation at any time during the previous five years (or the period in which the interest was held by its present holder, if shorter) or if interests in the corporation ceased to be United States real property interests under section 897(c)(1)(B). (A corporation may not provide such a statement based on its determination that the interest in question is an interest solely as a creditor). See § 1.897–2 (f) and (h). The corporation may provide such a statement directly to the transferee at the transferor's request. The transferor must request such a statement prior to the transfer, and shall, to the extent possible, specify the anticipated date of the transfer. A corporation's statement may be relied upon for purposes of this paragraph (c)(3) only if the statement is dated not more than 30 days prior to the date of the transfer. A transferee may also rely upon a corporation's statement that is voluntarily provided by the corporation in response to a request from the transferee, if that statement otherwise complies with the requirements of this paragraph (c)(3) and § 1.897–2(h).

(ii) *Reliance on statement not permitted.* A transferee is not entitled to rely upon a statement that a corporation is not a U.S. real property holding corporation if, prior to or at the time of the transfer, the transferee either—

(A) Has actual knowledge that the statement is false, or

(B) Receives a notice that the statement is false from a transferor's or transferee's agent, pursuant to § 1.1445–4.

Such a transferee's withholding obligations shall apply as if a statement had

never been given, and such a transferee may be held fully liable pursuant to §1.1445–1(e) for any failure to withhold.

(iii) *Belated notice of false statement.* If after the date of the transfer, a transferee receives notice that a statement provided under §1.1445–2(c)(3)(i) (that an interest in a corporation is not a U.S. real property interest) is false, then such transferee may rely on the statement only with respect to consideration that was paid prior to the receipt of the notice.

Such a transferee is required to withhold a full 10 percent of the amount realized from the consideration that remains to be paid to the transferor, if possible. Thus, if 10 percent or more of the amount realized remains to be paid to the transferor, then the transferee is required to withhold and pay over the full 10 percent. The transferee must do so by withholding and paying over the entire amount of each successive payment of consideration to the transferor, until the full 10 percent of the amount realized has been withheld and paid over. Amounts so withheld must be reported and paid over by the 20th day following the date on which each such payment of consideration is made. A transferee that is subject to the rules of this §1.1445–2(c)(3)(iii) may not obtain a withholding certificate pursuant to §1.1445–3, but must instead withhold and pay over the amounts required by this paragraph.

(d) *Exceptions to requirement of withholding*—(1) *Purchase of residence for $300,000 or less.* No withholding is required under section 1445(a) if one or more individual transferees acquire a U.S. real property interest for use as a residence and the amount realized on the transaction is $300,000 or less. For purposes of this section, a U.S. real property interest is acquired for use as a residence if on the date of the transfer the transferee (or transferees) has definite plans to reside at the property for at least 50 percent of the number of days that the property is used by any person during each of the first two 12-month periods following the date of the transfer. The number of days that the property will be vacant is not taken into account in determining the number of days such property is used by any person. A transferee shall be considered to reside at a property on any day on which a member of the transferee's family, as defined in section 267(c)(4), resides at the property. No form or other document need be filed with the Internal Revenue Service to establish a transferee's entitlement to rely upon the exception provided by this paragraph (d)(1). A transferee who fails to withhold in reliance upon this exception, but who does not in fact reside at the property for the minimum number of days set forth above, shall be liable for the failure to withhold (if the transferor was a foreign person and did not pay the full U.S. tax due on any gain recognized upon the transfer). However, if the transferee establishes that the failure to reside the minimum number of days was caused by a change in circumstances that could not reasonably have been anticipated at the time of the transfer, then the transferee shall not be liable for the failure to withhold.

The exception provided by paragraph (d)(1) does not apply in any case where the transferee is other than an individual even if the property is acquired for or on behalf of an individual who will use the property as a residence. However, this exception applies regardless of the organizational structure of the transferor (i.e., regardless of whether the transferor is an individual, partnership, trust, corporation, etc.).

(2) *Coordination with nonrecognition provisions*—(i) *In general.* A transferee shall not be required to withhold under section 1445(a) with respect to the transfer of a U.S. real property interest if—

(A) The transferor notifies the transferee, in the manner described in paragraph (d)(2)(iii) of this section, that by reason of the operation of a nonrecognition provision of the Internal Revenue Code or the provisions of any United States treaty the transferor is not required to recognize any gain or loss with respect to the transfer, and

(B) By the 20th day after the date of the transfer the transferee provides a copy of the transferor's notice to the Director, Philadelphia Service Center, at the address provided in §1.1445–1(g)(10), together with a cover letter setting forth the name, identifying number, and home address (in the case

of an individual) or office address (in the case of an entity) of the transferee providing the notice to the Service. The rule of this paragraph (d)(2)(i) is subject to the exceptions set forth in paragraph (d)(2)(ii). For purposes of this paragraph (d)(2) a nonrecognition provision is any provision of the Internal Revenue Code for not recognizing gain or loss.

(ii) *Exceptions*. A transferee may not rely upon the rule of paragraph (d)(2)(i) of this section, and must therefore withhold under section 1445(a) with respect to the transfer of a U.S. real property interest, if either:

(A) The transferor qualifies for nonrecognition treatment with respect to part, but not all, of the gain realized by the transferor upon the transfer, or

(B) The transferee knows or has reason to know that the transferor is not entitled to the nonrecognition treatment claimed by the transferor.

In either of the above circumstances the transferee or transferor may request a withholding certificate from the Internal Revenue Service pursuant to the rules of § 1.1445–3.

(iii) *Contents of the notice*. No particular form is required for a transferor's notice to a transferee that the transferor is not required to recognize gain or loss with respect to a transfer. The notice must be verified as true and signed under penalties of perjury by the transferor, by a responsible officer in the case of a corporation, by a general partner in the case of a partnership, and by a trustee or equivalent fiduciary in the case of a trust or estate. The following information must be set forth in paragraphs labeled to correspond with the designation set forth as follows—

(A) A statement that the document submitted constitutes a notice of a nonrecognition transaction or a treaty provision pursuant to the requirements of § 1.1445–2(d)(2);

(B) The name, identifying number, and home address (in the case of an individual) or office address (in the case of an entity) of the transferor submitting the notice;

(C) A statement that the transferor is not required to recognize any gain or loss with respect to the transfer;

(D) A brief description of the transfer; and

(E) A brief summary of the law and facts supporting the claim that recognition of gain or loss is not required with respect to the transfer.

(iv) *No notice allowed*. The provisions of this paragraph (d)(2) do not apply to exclusions from income under section 121, to simultaneous like-kind exchanges under section 1031 that do not qualify for nonrecognition treatment in their entirety (see paragraph (d)(2)(ii)(A) of this section), and to nonsimultaneous like-kind exchanges under section 1031 where the transferee cannot determine that the exchange has been completed and all the conditions for nonrecognition have been satisfied at the time it is otherwise required to pay the section 1445 withholding tax and file the withholding tax return (Form 8288, ''U.S. Withholding Tax Return for Dispositions by Foreign Persons of U.S. Real Property Interests''). In these cases, the transferee is excused from withholding only upon the timely application for and receipt of a withholding certificate under § 1.1445–3 (see § 1.1445–3(b)(5) and (6) for specific rules applicable to transactions under sections 121 and 1031). This paragraph (d)(2)(iv) is applicable for dispositions and exchanges occurring September 4, 2003.

(3) *Special procedural rules applicable to foreclosures*—(i) *Amount to be withheld*—(A) *foreclosures*. A transferee that acquires a U.S. real property interest pursuant to a repossession or foreclosure on such property under a mortgage, security agreement, deed of trust or other instrument securing a debt must withhold tax under section 1445(a) equal to 10 percent of the amount realized on such sale. Such amount must be reported and paid over to the Service under the general rules of § 1.1445–1. However, if the transferee complies with the notice requirements of § 1.1445–2(d)(3) (ii) and (iii), such transferee may report and pay over to the Service on or before the 20th day following the final determination by a court or trustee with jurisdiction over the foreclosure action, the lesser of:

(*1*) The amount otherwise required to be withheld under section 1445(a), or

(*2*) The ''alternative amount'' as defined in the succeeding sentence. The alternative amount is the entire amount, if any, determined by a court or trustee with jurisdiction over the matter, that accrues to the debtor/transferor out of the amount realized from the foreclosure sale. The amount of any mortgage, lien, or other security agreement secured by the property, that is terminated, assumed by another person, or otherwise extinguished (as to the debtor/transferor) shall not be treated as an amount that accrues to the debtor/transferor for purposes of this §1.1445–2(d)(3)(i)(A). If the alternative amount is zero, no withholding is required. Any difference between the amount withheld at the time of the foreclosure sale and the amount to be reported and paid over to the Service must be transferred to the court or trustee with jurisdiction over the foreclosure action. Amounts withheld, if any, are to be reported and paid to the Service by using Forms 8288 and 8288–A in conformity with §1.1445–1(d).

(B) *Deeds in lieu of foreclosures.* A transferee of a U.S. real property interest pursuant to a deed in lieu of foreclosure must withhold tax equal to 10 percent of the amount realized by the debtor/transferor on the transfer. However, no withholding is required if:

(*1*) The transferee is the only person with a security interest in the property,

(*2*) No cash or other property (other than incidental fees incurred with respect to the transfer) is paid, directly or indirectly, to any person with respect to the transfer, and

(*3*) The notice requirement of §1.1445–2(d)(3) are satisfied.

The amount withheld, if any, must be reported and paid over to the Service not later than the 20th day following the date of transfer. In a case where withholding would otherwise be required, a withholding certificate may be requested in accordance with §1.1445–3.

(ii) *Notice to the court or trustee in a foreclosure action*—(A) *Notice on day of purchase.* A transferee in a foreclosure sale that chooses to use the special rules applicable to foreclosures must provide notice to the court or trustee with jurisdiction over the foreclosure action on the day the property is transferred with respect to such transferee's withholding obligation. No particular form is necessary but the notice must set forth the transferee's name, home address in the case of an individual, office address in the case of an entity, a brief description of the property, the date of the transfer, the amount realized on the sale of the foreclosed property and the amount withheld under section 1445(a).

(B) *Notice whether amount withheld or alternative amount is reported and paid over to the Service.* A purchaser/transferee in a foreclosure that chooses to use the special rules applicable to foreclosures must provide notice to the court or trustee with jurisdiction over the foreclosure action regarding whether the amount withheld or the alternative amount will be (or has been) reported and paid over to the Service. The notice should set forth all the information required by the preceding paragraph (d)(3)(ii)(A), the amount withheld or alternative amount that will be (or has been) reported and paid over to the Service, and the amount that will be (or has been) paid over to the court or trustee.

(iii) *Notice to the Service*—(A) *General rule.* A transferee that in reliance upon the rules of this paragraph (d)(3) withholds an alternative amount (or does not withhold because the alternative amount is zero) must, on or before the 20th day following the final determination by a court or trustee in a foreclosure action or on or before the 20th day following the date of the transfer with respect to a transfer pursuant to a deed in lieu of foreclosure, provide notice thereof to the Assistant Commissioner (International) at the address provided in §1.1445–1(g)(10). (The filing of such a notice shall not relieve a creditor of any obligation it may have to file a notice pursuant to section 6050J and the regulations thereunder.) No particular form is required but the following information must be set forth in paragraphs labelled to correspond with the numbers set forth below.

(*1*) A statement that the notice constitutes a notice of foreclosure action or transfer pursuant to a deed in lieu of foreclosure under §1.1445–2(d)(3).

(*2*) The name, identifying number, and home address (in the case of an individual) or office address (in the case of an entity) of the purchaser/transferee.

(*3*) The name, identifying number, and home address (in the case of an individual) or office address (in the case of an entity) of the debor/transferor.

(*4*) In a foreclosure action, the date of the final determination by a court or trustee regarding the distribution of the amount realized from the foreclosure sale. In a transfer pursuant to a deed in lieu of foreclosure, the date the property is transferred to the purchaser/transferee.

(*5*) A brief description of the property.

(*6*) The amount realized from the foreclosure sale or with respect to the transfer pursuant to a deed in lieu of foreclosure.

(*7*) The alternative amount.

(B) *Special rule for lenders required to file Form 1099–A where the alternative amount is zero*. A person required under section 6050J to file Form 1099–A does not have to comply with the notice requirement of §1.1445–2(d)(3)(iii)(A) if the alternative amount is zero. In such case, the filing of the Form 1099–A will be deemed to satisfy the notice requirments of §1.1445–2(d)(3)(iii)(A).

(iv) *Requirements not applicable*. A transferee is not required to withhold tax or provide notice pursuant to the rules of this paragraph (d)(3) if no substantive withholding liability applies to the transfer of the property by the debtor/transferor. For example, if the debtor/transferor provides the transferee with a certification of non-foreign status pursuant to paragraph (b) of this section, then no substantive withholding liability would exist with respect to the acquisition of the property from the debtor transferor. In such a case, no withholding of tax or notice to the Internal Revenue Service is required of the transferee with respect to the repossession or foreclosure.

(v) *Anti-abuse rule*. If a U.S. real property interest is transferred in foreclosure or pursuant to a deed in lieu of foreclosure for a principal purpose of avoiding the requirements of section 1445(a), then the provisions of this paragraph (d)(3) shall not apply to the transfer and the transferee shall be fully liable for any failure to withhold with respect to the transfer. A principal purpose to avoid section 1445(a) will be presumed (subject to rebuttal on the basis of all relevant facts and circumstances) if:

(A) The transferee acquires property in which it, or a related party, has a security interest;

(B) The security interest did not arise in connection with the debtor/transferor's or a related party's or predecessor in interest's acquisition, improvement, or maintenance of the property; and

(C) The total amount of all debts secured by the property exceeds 90 percent of the fair market value of the property.

(4) *Installment payments*. A transferee of a U.S. real property interest is not required to withhold under section 1445 when making installment payments on an obligation arising out of a dispositions that took place before January 1, 1985. With respect to disposition that take place after December 31, 1984, the transferee shall be required to satisfy its entire withholding obligation within the time specified in §1.1445–1(c) regardless of the amount actually paid by the transferee. Thereafter, no withholding is required upon further installment payments on an obligation arising out of the transfer. A transferee that is unable to satisfy its entire withholding obligation within the time specified in §1.1445–1(c) may request a withholding certificate pursuant to §1.1445–3.

(5) *Acquisitions by governmental bodies*. No withholding of tax is required under section 1445 with respect to any acquisition of property by the United States, a state or possession of the United States, a political subdivision thereof, or the District of Columbia.

(6) [Reserved]

(7) *Withholding certificate obtained by transferee or transferor*. No withholding is required under section 1445(a) if the transferee is provided with a withholding cerfiticate that so specifies. Either the transferor or the transferee may seek a withholding certificate from the Internal Revenue Service, pursuant to the provisions of §1.1445–3.

(8) *Amount realized by transferor is zero.* If the amount realized by transferor on a transfer of a U.S. real property interest is zero, no withholding is required.

(e) *Effective date for taxpayer identification numbers.* The requirement in paragraphs (d)(2)(i)(B), (d)(2)(iii)(B), and (d)(3)(iii)(A)(*2*) and (*3*) of this section that taxpayer identification numbers be provided (in all cases) is applicable for dispositions of U.S. real property interests occurring after November 3, 2003.

[T.D. 8113, 51 FR 46633, Dec. 24, 1986; 52 FR 3917, Feb. 6, 1987; as amended at T.D. 8198, 53 FR 16230, May 5, 1988; T.D. 9082, 68 FR 46084, Aug. 5, 2003]

§ 1.1445–3 Adjustments to amount required to be withheld pursuant to withholding certificate.

(a) *In general.* Withholding under section 1445(a) may be reduced or eliminated pursuant to a withholding certificate issued by the Internal Revenue Service in accordance with the rules of this section. A withholding certificate may be issued by the Service in cases where reduced withholding is appropriate (see paragraph (c) of this section), where the transferor is exempt from U.S. tax (see paragraph (d) of this section), or where an agreement for the payment of tax is entered into with the Service (see paragraph (e) of this section). A withholding certificate that is obtained prior to a transfer notifies the transferee that no withholding is required. A withholding certificate that is obtained after a transfer has been made may authorize a normal refund or an early refund pursuant to paragraph (g) of this section. Either a transferee or transferor may apply for a withholding certificate. The Internal Revenue Service will act upon an application for a withholding certificate not later than the 90th day after it is received. Solely for this purpose (i.e., determining the day upon which the 90-day period commences), an application is received by the Service on the date that all information necessary for the Service to make a determination is provided by the applicant. In no event, however, will a withholding certificate be issued without the transferor's identifying number. (For rules regarding whether an application for a withholding certificate has been timely submitted, see § 1.445–1(c)(2).) The Service may deny a request for a withholding certificate where, after due notice, an applicant fails to provide information necessary for the Service to make a determination. The Service will act upon an application for an early refund not later than the 90th day after it is received. An application for an early refund must either (1) include a copy of a withholding certificate issued by the Service with respect to the transaction or, (2) be combined with an application for a withholding certificate. Where an application for an early refund is combined with an application for a withholding certificate, the Service will act upon both applications not later than the 90th day after receipt. In the case of an application for a certificate based on non-conforming secuirty under paragraph (e)(3)(v) of this section, and in unusually complicated cases, the Service may be unable to provide a final withholding certificate by the 90th day. In such a case the Service will notify the applicant, by the 45th day after receipt of the application, that additional processing time will be necessary. The Service's notice may request additional information or explanation concerning particular aspects of the application, and will provide a target date for final action (contingent upon the application's timely submission of any requested information). A withholding certificate issued pursuant to the provisions of this section serves to fulfill the requirements of section 1445(b)(4) concerning qualifying statements, section 1445(c)(1) concerning the transferor's maximum tax liability, or section 1445(c)(2) concerning the Secretary's authority to prescribe reduced withholding.

(b) *Applications for withholding certificates*—(1) *In general.* An application for a withholding certificate must be submitted to the Director, Philadelphia Service Center, at the address provided in § 1.1445–1(g)(10). An application for a withholding certificate must be signed by a responsible officer in the case of a corporation, by a general partner in the case of a partnership, by a trustee, executor, or equivalent fiduciary in the

case of a trust or estate, and in the case of an individual by the individual himself. A duly authorized agent may sign the application but the application must contain a valid power of attorney authorizing the agent to sign the application on behalf of the applicant. The person signing the application must verify under penalties of perjury that all representations made in connection with the application are true, correct, and complete to his knowledge and belief. No particular form is required for an application, but the application must set forth the information described in paragraphs (b), (2), (3), and (4), and to the extent applicable, paragraph (b)(5) or (6) of this section.

(2) *Parties to the transaction*. The application must set forth the name, address, and identifying number of the person submitting the application (specifying whether that person is the transferee or transferor), and the name, address, and identifying number of other parties to the transaction (specifying whether each such party is a transferee or transferor). The Service will deny the application if complete information, including the identifying numbers of all the parties, is not provided. Thus, for example, the applicant should determine if an identifying number exists for each party, and, if none exists for a particular party, the applicant should notify the particular party of the obligation to get an identifying number before the application can be submitted to the Service. The address provided in the case of an individual must be that individual's home address, and the address provided in the case of an entity must be that entity's office address. A mailing address may be provided in addition to, but not in lieu of, a home address or office address.

(3) *Real property interest to be transferred*. The application must set forth information concerning the U.S. real property interest with respect to which the withholding certificate is sought, including the type of interest, the contract price, and, in the case of an interest in real property, its location and general description, or in the case of an interest in a U.S. real property holding corporation, the class or type and amount of the interest.

(4) *Basis for certificate*—(i) *Reduced withholding*. If a withholding certificate is sought on the basis of a claim that reduced withholding in appropriate, the application must include:

(A) A calculation of the maximum tax that may be imposed on the disposition in accordance with paragraph (c)(2) of this section. Such calculation must be accompanied by a copy of the relevant contract and depreciation schedules or other evidence that confirms the contract price and adjusted basis of the property. If no depreciation schedules are provided, the application must state the nature of the use of the property and why depreciation was not allowable. Evidence that supports any claimed adjustment to the maximum tax on the disposition must also be provided;

(B) A calculation of the transferor's unsatisfied withholding liability, or evidence supporting the claim that no such liability exists, in accordance with paragraph (c)(3) of this section; and

(C) In the case of a request for a special reduction of withholding pursuant to paragraph (c)(4) of this section, a statement of law and facts in support of the request.

(ii) *Exemption*. If a withholding certificate is sought on the basis of the transferor's exemption from U.S. tax, the application must set forth a brief statement of the law and facts that support the claimed exemption. In this regard, see paragraph (d) of this section.

(iii) *Agreement*. If a withholding certificate is sought on the basis of an agreement for the payment of tax, the application must include a signed copy of the agreement proposed by the applicant and a copy of the security instrument (if any) proposed by the applicant. In this regard, see paragraph (e) of this section.

(5) *Special rule for exclusions from income under section 121*. A withholding certificate may be sought on the basis of a section 121 exclusion as a reduction in the amount of tax due under paragraph (c)(2)(v) of this section. The application must include information establishing that the transferor, who is

a nonresident alien individual at the time of the sale (and is therefore subject to sections 897 and 1445) is entitled to claim the benefits of section 121. For example, a claim for reduced withholding as a result of section 121 must include information that the transferor occupied the U.S. real property interest as his or her personal residence for the required period of time.

(6) *Special rule for like-kind exchanges under Section 1031.* A withholding certificate may be requested with respect to a like-kind exchange under section 1031 as a transaction subject to a nonrecognition provision under paragraph (c)(2)(ii) of this section. The application must include information substantiating the requirements of section 1031. The IRS may require additional information during the course of the application process to determine that the requirements of section 1031 are satisfied. In the case of a deferred like-kind exchange, the withholding agent is excused from reporting and paying the withholding tax to the IRS within 20 days after the transfer only if an application for a withholding certificate is submitted prior to or on the date of transfer. See §1.1445–1(c)(2) for rules concerning delayed reporting and payment where an application for a withholding certificate has been submitted to the IRS prior to or on the date of transfer.

(c) *Adjustment of amount required to be withheld*—(1) *In general.* The Internal Revenue Service may issue a withholding certificate that excuses withholding or that permits the transferee to withhold an adjusted amount reflecting the transferor's maximum tax liability. The transferor's maximum tax liability is the sum of—

(i) The maximum amount which could be imposed as tax under section 871 or 882 upon the transferor's disposition of the subject real property interest, as determined under paragraph (c)(2) of this section, and

(ii) The transferor's unsatisfied withholding liability with respect to the subject real property interest, as determined under paragraph (c)(3) of this section.

In addition, the Internal Revenue Service may issue a withholding certificate that permits the transferee to withhold a reduced amount if the Service determines pursuant to paragraph (c)(4) of this section that reduced withholding will not jeopardize the collection of tax.

(2) *Maximum tax imposed on disposition.* The first element of the transferor's maximum tax liability is the maximum amount which the transferor could be required to pay as tax upon the disposition of the subject real property interest. In the case of an individual transferor that amount will generally be the contract price of the property minus its adjusted basis, multiplied by the maximum individual income tax rate applicable to long term capital gain. In the case of a corporate transferor, that amount will generally be the contract price of the property minus its adjusted basis, multiplied by the maximum corporate income tax rate applicable to long term capital gain. However, that amount must be adjusted to take into account the following:

(i) Any reduction of tax to which the transferor is entitled under the provisions of a U.S. income tax treaty;

(ii) The effect of any nonrecognition provision that is applicable to the transaction;

(iii) Any losses realized and recognized upon the previous disposition of U.S. real property interests during the taxable year;

(iv) Any amount that is required to be treated as ordinary income; and

(v) Any other factor that may increase or reduce the tax upon the disposition.

(3) *Transferor's unsatisfied withholding liability*—(i) *In general.* The second element of the transferor's maximum tax liability is the transferor's unsatisfied withholding liability. That liability is the amount of any tax that the transferor was required to but did not withhold and pay over under section 1445 upon the acquisition of the subject U.S. real property interest or a predecessor interest. The transferor's unsatisfied withholding liability is included in the calculation of maximum tax liability so that such prior withholding liability can be satisfied by the transferee's withholding upon the current transfer. Alternatively, the transferor's unsatisfied withholding liability may

be disregarded for purposes of calculating the maximum tax liability, if either—

(A) Such prior withholding liability is fully satisfied by a payment that is made with the application submitted pursuant to this section; or

(B) An agreement is entered into for the payment of that liability pursuant to the rules of paragraph (e) of this section.

Because section 1445 only requires withholding after December 31, 1984, no transferor's unsatisfied withholding liability can exist unless the transferor acquired the subject or predecessor real property interest after that date. For purposes of this paragraph (c), a predecessor interest is one that was exchanged for the subject U.S. real property interest in a transaction in which the transferor was not required to recognize the full amount of the gain or loss realized upon the transfer.

(ii) *Evidence that no unsatisfied withholding liability exists.* For purposes of paragraph (b)(4)(i)(B) of this section (concerning information that must be submitted with an application for a withholding certificate), evidence that the transferor has no unsatisfied withholding liability includes any one of the following documents:

(A) Evidence that the transferor acquired the subject or predecessor real property interest prior to January 1, 1985;

(B) A copy of the Form 8288 that was filed by the transferor, and proof of payment of the amount shown due thereon, with respect to the transferor's acquisition of the subject or predecessor real property interest;

(C) A copy of a withholding certificate with respect to the transferor's acquisition of the subject or predecessor real property interest, plus a copy of Form 8288 and proof of payment with respect to any withholding required under that certificate;

(D) A copy of the non-foreign certification furnished by the person from whom the subject or predecessor U.S. real property interest was acquired, executed at the time of that acquisition;

(E) Evidence that the transferor purchased the subject or predecessor real property for $300,000 or less, and a statement signed by the transferor under penalties of perjury, that the transferor purchased the property for use as a residence within the meaning of § 1.1445–2(d)(1);

(F) Evidence that the person from whom the transferor acquired the subject or predecessor U.S. real property interest fully paid any tax imposed on that transaction pursuant to section 897.

(G) A copy of a notice of nonrecognition treatment provided to the transferor pursuant to § 1.1445–2(d)(2) by person from whom the transferor acquired the subject or predecessor U.S. real property interest; and

(H) A statement, signed by the transferor under penalties of perjury, setting forth the facts and circumstances that supported the transferor's conclusion that no withholding was required under section 1445(a) with respect to the transferor's acquisition of the subject or predecessor real property interest.

(4) *Special reduction of amount required to be withheld.* The Internal Revenue Service may, in its discretion, issue a withholding certificate that permits the transferee to withhold a reduced amount based upon a determination that reduced withholding will not jeopardize the collection of tax. A transferor that requests a withholding certificate pursuant to this paragraph (c)(4) is required pursuant to paragraph (b)(4)(i)(C) of this section to submit a statement of law and facts in support of the request. That statement must explain why the transferor is unable to enter into an agreement for the payment of tax pursuant to paragraph (e) of this section.

(d) *Transferor's exemption from U.S. tax*—(1) *In general.* The Internal Revenue Service will issue a withholding certificate that excuses all withholding by a transferee if it is established that:

(i) The transferor's gain from the disposition of the subject U.S. real property interest will be exempt from U.S. tax, and

(ii) The transferor has no unsatisfied withholding liability.

For the available exemptions, see paragraph (d)(2) of this section. The transferor's unsatisfied withholding liability shall be determined in accordance with the provisions of paragraph (c)(3) of

this section. A transferor that is entitled to a reduction of (rather than an exemption from) U.S. tax may obtain a withholding certificate to that effect pursuant to the provisions of paragraph (c) of this section.

(2) *Available exemptions.* A transferor's gain from the disposition of a U.S. real property interest may be exempt from U.S. tax because either:

(i) The transferor is an integral part or controlled entity of a foreign government and the disposition of the subject property is not a commercial activity, as determined pursuant to section 892 and the regulations thereunder; or

(ii) The transferor is entitled to the benefits of an income tax treaty that provides for such an exemption (subject to the limitations imposed by section 1125(c) of Pub. L. 96–499, which, in general, overrides such benefits as of January 1, 1985).

(e) *Agreement for the payment of tax*—(1) *In general.* The Internal Revenue Service will issue a withholding certificate that excuses withholding or that permits a transferee to withhold a reduced amount, if either the transferee or the transferor enters into an agreement for the payment of tax pursuant to the provisions of this paragraph (e). An agreement for the payment of tax is a contract between the Service and any other person that consists of two necessary elements. Those elements are—

(i) A contract between the Service and the other person, setting forth in detail the rights and obligations of each; and

(ii) A security instrument or other form of security acceptable to the Director, Foreign Operations District.

(2) *Contents of agreement*—(i) *In general.* An agreement for the payment of tax must cover an amount described in subdivision (ii) or (iii) of this paragraph (e)(2). The agreement may either provide adequate security for the payment of the chosen amount in accordance with paragraph (e)(3) of this section, or provide for the payment of that amount through a combination of security and withholding of tax by the transferee.

(ii) *Tax that would otherwise be withheld.* An agreement for the payment of tax may cover the amount of tax that would otherwise be required to be withheld pursuant to section 1445(a). In addition to the amount computed pursuant to section 1445(a), the applicant must agree to pay interest upon that amount, at the rate established under section 6621, with respect to the period between the date on which the tax imposed by section 1445(a) would otherwise be due (*i.e.*, the 20th day after the date of transfer) and the date on which the transferor's payment of tax with respect to the disposition will be due under the agreement. The amount of interest agreed upon must be paid by the applicant regardless of whether or not the Service is required to draw upon any security provided pursuant to the agreement. The interest may be paid either with the return or by the Service drawing upon the security.

(iii) *Maximum tax liability.* An agreement for the payment of tax may cover the transferor's maximum tax liability, determined in accordance with paragraph (c) of this section. The agreement must also provide for the payment of an additional amount equal to 25 percent of the amount determined under paragraph (c) of this section. This additional amount secures the interest and penalties that would accrue between the date of a failure to file a return and pay tax with respect to the disposition, and the date on which the Service collects upon that liability pursuant to the agreement. Such additional amount will only be collected if the Service finds it necessary to draw upon any security provided due to the transferor's failure to file a return and pay tax with respect to the relevant disposition.

(3) *Major types of security*—(i) *In general.* The following are the major types of security acceptable to the Service. Further details with respect to the terms and conditions of each type may be specified by Revenue Procedure.

(ii) *Bond with surety or guarantor.* The Service may accept as security with respect to a transferor's tax liability a bond that is executed with a satisfactory surety or guarantor. Only the following persons may act as surety or guarantor for this purpose

(A) A surety company holding a certificate of authority from the Secretary as an acceptable surety on Federal bonds, as listed in Treasury Department Circular No. 570, published annually in the FEDERAL REGISTER on the first working day of July;

(B) A person that is engaged within or without the United States in the conduct of a banking, financing, or similar business under the principles of §1.864–4(c)(5), and that is subject to U.S. or foreign local or national regulation of such business, if that person is otherwise acceptable to the Service; and

(C) A person that is engaged within or without the United States in the conduct of an insurance business that is subject to U.S. or foreign local or national regulation, if that person is otherwise acceptable to the Service.

(iii) *Bond with collateral*. The Service may accept as security with respect to a transferor's tax liability a bond that is secured by acceptable collateral. All collateral must be deposited with a responsible financial institution acting as escrow agent, or, in the Service's discretion, with the Service. Only the following types of collateral are acceptable:

(A) Bonds, notes, or other public debt obligations of the United States, in accordance with the rules of 31 CFR part 225; and

(B) A certified cashier's, or treasurer's check, drawn on an entity acceptable to the Service that is engaged within or without the United States in the conduct of a banking, financing, or similar business under the principles of §1.864–4(c)(5) and that is subject to U.S. or foreign local or national regulation of such business.

(iv) *Letter of credit*. The Service may accept as security with respect to a transferor's tax liability an irrevocable letter of credit. The Service may accept a letter of credit issued by an entity acceptable to the Service that is engaged within or without the United States in the conduct of a banking, financing, or similar business under the principles of §1.864–4(c)(5) and that is subject to U.S. or foreign local or national regulation of such business. However, the Director will accept a letter of credit from an entity that is not engaged in trade or business in the United States only if such letter may be drawn on an advising bank within the United States.

(v) *Guarantees and other non-conforming security*—(A) *Guarantee*. The Service may in its discretion accept as security with respect to a transferor's tax liability the applicant's guarantee that it will pay such liability. The Service will in general accept such a guarantee only from a corporation, foreign or domestic, any class of stock of which is regularly traded on an established securities market on the date of the transfer.

(B) *Other forms of security*. The Service may in unusual circumstances and at its discretion accept any form of security that if finds to be adequate. An application for a withholding certificate that proposes a form of security that does not conform with any of the preferred types set forth in paragraph (e)(3) (ii) through (iv) of this section or any relevant Revenue Procedure must include:

(*1*) A detailed statement of the facts and circumstances supporting the use of the proposed form of security, and

(*2*) A memorandum of law concerning the validity and enforceability of the proposed form of security.

(4) *Terms of security instrument*. Any security instrument that is furnished pursuant to this section must provide that—

(i) The amount of each deposit of estimated tax that will be required with respect to the gain realized on the subject disposition may be collected by levy upon the security as of the date following the date on which each such deposit is due (unless such deposit is timely made);

(ii) The entire amount of the liability may be collected by levy upon the security at any time during the nine months following the date on which the payment of tax with respect to the subject disposition is due, subject to release of the security upon the full payment of the tax and any interest and penalties due. If the transferor requests an extension of time to file a return with respect to the disposition, then the Director may require that the term of the security instrument be extended until the date that is nine

months after the filing deadline as extended.

(f) *Amendments to application for withholding certificate*—(1) *In general.* An applicant for a withholding certificate may amend an otherwise complete application by submitting an amending statement to the Director, Philadelphia Service Center, at the address provided in §1.1445–1(g)(10). The amending statement shall provide the information required by §1.1445–3(f)(3) and must be signed and accompanied by a penalties of perjury statement in accordance with §1.1445–3(b)(1).

(2) *Extension of time for the Service to process requests for withholding certificates*—(i) *In general.* If an amending statement is submitted, the time in which the Internal Revenue Service must act upon the amended application shall be extended by 30 days.

(ii) *Substantial amendments.* If an amending statement is submitted and the Service finds that the statement substantially amends the facts of the underlying application or substantially alters the terms of the withholding certificate as requested in the initial application, the time within which the Service must act upon the amended application shall be extended by 60 days. The applicant shall be so notified.

(iii) *Amending statement received after the requested withholding certificate has been signed by the Director, Philadelphia Service Center.* If an amending statement is received after the withholding certificate, drafted in response to the underlying application, has been signed by the Director, Philadelphia Service Center or his delegate and prior to the day such certificate is mailed to the applicant, the time in which the Service must act upon the amended application shall be extended by 90 days. The applicant will be so notified.

(3) *Information required to be submitted.* No particular form is required for an amending statement but the statement must provide the following information:

(i) *Identification of applicant.* The amending statement must set forth the name, address and identifying number of the person submitting the amending statement (specifying whether that person is the transferee or transferor).

(ii) *Date of underlying application.* The amending statement must set forth the date of the underlying application for a withholding certificate.

(iii) *Real property interest to be (or that has been) transferred.* The amending statement must set forth a brief description of the real property interest with respect to which the underlying application for a withholding certificate was submitted.

(iv) *Amending information.* The amending statement must fully set forth the basis for the amendment including any modification of the facts supporting the application for a withholding certificate and any change sought in the terms of the withholding certificate.

(g) *Early refund of overwithheld amounts.* If a transferor receives a withholding certificate pursuant to this section, and an amount greater than that specified in the certificate was withheld by the transferee, then pursuant to the rules of this paragraph (g) the transferor may apply for a refund (without interest) of the excess amount prior to the date on which the transferor's tax return is due (without extensions). (Any interest payable on refunds issued after the filing of a tax return shall be determined in accordance with the provisions of section 6611 and regulations thereunder.) An application for an early refund must be addressed to the Director, Philadelphia Service Center, at the address provided in §1.1445–1(g)(10). No particular form is required for the application, but the following information must be set forth in separate paragraphs numbered to correspond with the number given below:

(1) Name, address, and identifying number of the transferor seeking the refund;

(2) Amount required to be withheld pursuant to the withholding certificate issued by Internal Revenue Service;

(3) Amount withheld by the transferee (attach a copy of Form 8288–A stamped by IRS pursuant to §1.1445–1(c));

(4) Amount to be refunded to the transferor. An application for an early refund cannot be processed unless the

required copy of Form 8288–A (or substantial evidence of the amount withheld in the case of a failure to receive Form 8288–A as provided in § 1.1445–1(f)(3)) is attached to the application. If an application for a withholding certificate based upon the transferor's maximum tax liability is submitted after the transfer takes place, then that application may be combined with an application for an early refund. The Service will act upon a claim for refund within the time limits set forth in paragraph (a) of this section.

(h) *Effective date for taxpayer identification numbers.* The requirement in paragraphs (b)(2), (f)(3)(i), and (g)(1) of this section that taxpayer identification numbers be provided (in all cases) is applicable for dispositions of U.S. real property interests occurring after November 3, 2003.

[T.D. 8113, 51 FR 46637, Dec. 24, 1986; 52 FR 3796, Feb. 6, 1987; T.D. 9082, 68 FR 46085, Aug. 5, 2003]

§ 1.1445–4 Liability of agents.

(a) *Duty to provide notice of false certification or statement to transferee.* A transferee's or transferor's agent must provide notice to the transferee if either—

(1) The transferee is furnished with a non-U.S. real property interest statement pursuant to § 1.1445-2(c)(3) and the agent knows that the statement is false; or

(2) The transferee is furnished with a non-foreign certification pursuant to § 1.1445–2(b)(2) and either (i) the agent knows that the certification is false, or (ii) the agent represents a transferor that is a foreign corporation. An agent that represents a transferor that is a foreign corporation is not required to provide notice to the transferee if the foreign corporation provided a non-foreign certification to the transferee prior to such agent's employment and the agent does not know that the corporation did so.

(b) *Duty to provide notice of false certification or statement to entity or fiduciary.* A transferee's or transferor's agent must provide notice to an entity or fiduciary that plans to carry out a transaction described in section 1445(e)(1), (2), (3), or (4) if either—

(1) The entity or fiduciary is furnished with a non-U.S. real property interest statement pursuant to § 1.1445–5(b)(4)(iii) and the agent knows that such statement is false; or

(2) The entity or fiduciary is furnished with a non-foreign certification pursuant to § 1.1445–5(b)(3) (ii) and either (i) the agent knows that such certification is false, or (ii) the agent represents a foreign corporation that made such a certification.

(c) *Procedural requirements*—(1) *Notice to transferee, entity, or fiduciary.* An agent who is required by this section to provide notice must do so in writing as soon as possible after learning of the false certification or statement, but not later than the date of the transfer (prior to the transferee's payment of consideration). If an agent first learns of a false certification or statement after the date of the transfer, notice must be given by the third day following that discovery. The notice must state that the certification or statement is false and may not be relied upon. The notice must also explain the possible consequences to the recipient of a failure to withhold. The notice need not disclose the information on which the agent's statement is based. The following is an example of an acceptable notice.''This is to notify you that you may be required to withhold tax in connection with (*describe transaction*). You have been provided with a certification of non-foreign status (or a non-U.S. real property interest statement) in connection with that transaction. I have learned that that document is false. Therefore, you may not rely upon it as a basis for failing to withhold under section 1445 of the Internal Revenue Code. Section 1445 provides that any person who acquires a U.S. real property interest from a foreign person must withhold a tax equal to 10 percent of the total purchase price. (The term 'U.S. real property interest' includes real property, stock in U.S. corporations whose assets are primarily real property, and some personal property associated with realty.) Any person who is required to withhold but fails to do so can be held liable for the tax. Thus, if you do not withhold the 10 percent tax from the total that you pay on this transaction you could

be required to pay the tax yourself, if what you are acquiring is a U.S. real property interest and the transferor is a foreign person. Tax that is withheld must be promptly paid over to the IRS using Form 8288. For further information see sections 897 and 1445 of the Internal Revenue Code and the related regulations.''

(2) *Notice to be filed with IRS.* An agent who is required by paragraph (a) or (b) of this section to provide notice to a transferee, entity, or fiduciary must furnish a copy of that notice to the Internal Revenue Service by the date on which the notice is required to be given to the transferee, entity, or fiduciary. The copy of the notice must be delivered to the Director, Philadelphia Service Center at the address provided in §1.1445–1(g)(10) and must be accompanied by a cover letter stating that the copy is being filed pursuant to the requirements of this §1.1445–4(c)(2).

(d) *Effect on recipient.* A transferee, entity, or fiduciary that receives a notice pursuant to this section prior to the date of the transfer from any agent of the transferor or transferee may not rely upon the subject certification or statement for purposes of excusing withholding pursuant to §1.1445–2 or §1.1445–5. Therefore, the recipient of a notice may be held liable for any failure to deduct and withhold tax under section 1445 as if such certification or statement had never been given. For special rules concerning the effect of the receipt of a notice after the date of the transfer, see §§1.1445–2(b)(4)(iv) and 1.1445–5 (c), (d) and (e).

(e) *Failure to provide notice.* Any agent who is required to provide notice but who fails to do so in the manner required by paragraph (a) or (b) of this section shall be held liable for the tax that the recipient of the notice would have been required to withhold under section 1445 if such notice had been given. However, an agent's liability under this paragraph (e) is limited to the amount of compensation that that agent derives from the transaction. In addition, an agent who assists in the preparation of, or fails to disclose knowledge of, a false certification or statement may be liable for civil or criminal penalties.

(f) *Definition of transferor's or transferee's agent*—(1) *In general.* For purposes of this section, the terms ''transferor's agent'' and ''transferee's agent'' means any person who represents the transferor or transferee (respectively)—

(i) In any negotiation with another person (or another person's agent) relating to the transaction; or

(ii) In settling the transaction.

(2) *Transactions subject to section 1445(e).* In the case of transactions subject section 1445(e), the following definitions apply.

(i) The term ''transferor's agent'' means any person that represents or advises an entity or fiduciary with respect to the planning, arrangement, or consummation by the entity of a transaction described in section 1445(e) (1), (2), (3), or (4).

(ii) The term ''transferee's agent'' means any person that represents or advises the holder of an interest in an entity with respect to the planning, arrangement or consummation by the entity of a transaction described in section 1445(e) (1), (2), (3), or (4).

(3) *Exclusion of settlement officers and clerical personnel.* For purposes of this section, a person shall not be treated as a transferor's agent or transferee's agent with respect to any transaction solely because such person performs one or more of the following activities.

(i) The receipt and disbursement of any portion of the consideration for the transaction;

(ii) The recording of any document in connection with the transaction;

(iii) Typing, copying, and other clerical tasks;

(iv) The obtaining of title insurance reports and reports concerning the condition of the real property that is the subject of the transaction; or

(v) The transmission or delivery of documents between the parties.

(4) *Exclusion for governing body of a condominium association and the board of directors of a cooperative housing corporation.* The members of a board, committee or other governing body of a condominium association and the board of directors and officers of a cooperative housing corporation will not be deemed agents of the transferor or transferee if such individuals function

exclusively in their capacity as representatives of such association or corporation with respect to the transaction. In addition, the managing agent of a cooperative housing corporation or condominium association will not be deemed to be an agent of the transferee or transferor if such person functions exclusively in its capacity as a managing agent. If a person's activities include advising the transferee or transferor with respect to the transfer, this exclusion shall not apply.

[T.D. 8113, 51 FR 46641, Dec. 24, 1986; 52 FR 3796, 3917, Feb. 6, 1987; T.D. 9082, 68 FR 46086, Aug. 5, 2003]

§ 1.1445–5 Special rules concerning distributions and other transactions by corporations, partnerships, trusts, and estates.

(a) *Purpose and scope.* This section provides special rules concerning the withholding that is required under section 1445(e) upon distributions and other transactions involving domestic or foreign corporations, partnerships, trusts, and estates. Paragraph (b) of this section provides rules that apply generally to the various withholding requirements set forth in this section. Under section 1445(e)(1) and paragraph (c) of this section, a domestic partnership or the fiduciary of a domestic trust or estate is required to withhold tax upon the entity's disposition of a U.S. real property interest if any foreign persons are partners or beneficiaries of the entity. Paragraph (d) provides rules concerning the requirement of section 1445(e)(2) that a foreign corporation withhold tax upon its distribution of a U.S. real property interest to its interest-holders. Finally, under section 1445(e)(3) and paragraph (e) of this section a domestic U.S. real property holding corporation is required to withhold tax upon certain distributions to interest-holders that are foreign persons. Paragraphs (f) and (g) of this section are reserved to provide rules concerning transactions involving interests in partnerships, trusts, and estates that will be subject to withholding pursuant to sections 1445(e) (4) and (5).

(b) *Rules of general application*—(1) *Double withholding not required.* If tax is required to be withheld with respect to a transfer of property in accordance with the rules of this section, then no additional tax is required to be withheld by the transferee of the property with respect to that transfer pursuant to the general rules of section 1445(a) and § 1.1445–1. For rules coordinating the withholding under section 1441 (or section 1442 or 1443) and under section 1445 on distributions from a corporation, see § 1.1441–3(b)(4). If a transfer of a U.S. real property interest described in section 1445(e) is exempt from withholding under the rules of this section, then no withholding is required under the general rules of section 1445(a) and § 1.1445–1.

(2) *Coordination with nonrecognition provisions*—(i) *In general.* Withholding shall not be required under the rules of this section with respect to a transfer described in section 1445(e) of a U.S. real property interest if—

(A) By reason of the operation of a nonrecognition provision of the Internal Revenue Code or the provisions of any treaty of the United States no gain or loss is required to be recognized by the foreign person with respect to which withholding would otherwise be required; and

(B) The entity or fiduciary that is otherwise required to withhold complies with the notice requirements of paragraph (b)(2)(ii) of this section. The entity or fiduciary must determine whether gain or loss is required to be recognized pursuant to the rules of section 897 and the applicable nonrecognition provisions of the Internal Revenue Code. An entity or fiduciary may obtain a withholding certificate from the Internal Revenue Service that confirms the applicability of a nonrecognition provision, but is not required to do so. For purposes of this paragraph (b)(2), a nonrecognition provision is any provision of the Internal Revenue Code for not recognizing gain or loss. If nonrecognition treatment is available only with respect to part of the gain realized on a transfer, the exemption from withholding provided by this paragraph (b)(2) shall not apply. In such cases a withholding certificate may be sought pursuant to the provisions of § 1.1445–6.

(ii) *Notice of nonrecognition transfer.* An entity or fiduciary that fails to withhold tax with respect to a transfer

in reliance upon the rules of this paragraph (b)(2) must by the 20th day after the date of the transfer deliver a notice thereof to the Director, Philadelphia Service Center, at the address provided in §1.1445–1(g)(10). No particular form is required for a notice of transfer, but the following information must be set forth in paragraphs labelled to correspond with the letter set forth below:

(A) A statement that the document submitted constitutes a notice of a nonrecognition transfer pursuant to the requirements of §1.1445–5(b)(2)(ii);

(B) The name, office address, and identifying number of the entity of fiduciary submitting the notice;

(C) The name, identifying number, and home address (in the case of an individual) or office address (in the case of an entity) of each foreign person with respect to which withholding would otherwise be required;

(D) A brief description of the transfer; and

(E) A brief statement of the law and facts supporting the claim that recognition of gain or loss is not required with respect to the transfer.

(3) *Interest-holder not a foreign person*—(i) *In general*. Pursuant to the provisions of paragraphs (c) and (e) of this section, an entity or fiduciary is required to withhold with respect to certain transfers of property if a holder of an interest in the entity is a foreign person. For purposes of determining whether a holder of an interest is a foreign person, and entity or fiduciary may rely upon a certification of nonforeign status provided by that person in accordance with paragraph (b)(3)(ii) of this section. Except to the extent provided in paragraph (b)(3)(iii) of this section, such a certification excuses the entity or fiduciary from any liability otherwise imposed pursuant to section 1445(e) and regulations thereunder. However, no obligation is imposed upon an entity or fiduciary to obtain certifications from interest-holders; an entity or fiduciary may instead rely upon other means to ascertain the nonforeign status of an interest-holder. If the entity or fiduciary does rely upon other means but the interest-holder proves, in fact, to be a foreign person, then the entity or fiduciary is subject to any liability imposed pursuant to section 1445 and regulations thereunder.

An entity or fiduciary is not required to rely upon other means to ascertain the non-foreign status of an interest-holder and may demand a certification of non-foreign status. If the certification is not provided, the entity or fiduciary may withhold tax under section 1445 and will be considered, for purposes of sections 1461 through 1463, to have been required to withhold such tax.

(ii) *Interest-holder's certification of non-foreign status*—(A) *In general*. For purposes of this section, an entity or fiduciary may treat any holder of an interest in the entity as a U.S. person if that interest-holder furnishes to the entity or fiduciary a certification stating that the interest-holder is not a foreign person, in accordance with the provisions of paragraph (b)(3)(ii)(B) of this section. In general, a foreign person is a nonresident alien individual, foreign corporation, foreign partnership, foreign trust, or foreign estate, but not a resident alien individual. In this regard, see §1.897–1(k).

(B) *Procedural rules*. An interest-holder's certification of non-foreign status must—

(*1*) State that the interest-holder is not a foreign person;

(*2*) Set forth the interest-holder's name, identifying number, home address (in the case of an individual), or office address (in the case of an entity), and place of incorporation (in the case of a corporation); and

(*3*) Be signed under penalties of perjury.

Pursuant to §1.897–1(p), an individual's identifying number is the individual's Social Security number and any other person's identifying number is its U.S. employer identification number. The certification must be signed by a responsible officer in the case of a corporation, by a general partner in the case of a partnership, and by a trustee, executor, or equivalent fiduciary in the case of a trust or estate. No particular form is needed for a certification pursuant to this paragraph (b)(3)(ii)(B), nor is any particular language required, so long as the document meets the requirements of this paragraph. Samples of acceptable certifications

are provided in paragraph (b)(3)(ii)(D) of this section. An entity may rely upon a certification pursuant to this paragraph (b)(3)(ii)(B) for a period of two calendar years following the close of the calendar year in which the certification was given.

If an interest holder becomes a foreign person within the period described in the preceding sentence, the interest-holder must notify the entity prior to any further dispositions or distributions and upon receipt of such notice (or any other notification of the foreign status of the interest-holder) the entity may no longer rely upon the prior certification. An entity that obtains and relies upon a certification must retain that certification with its books and records for a period of three calendar years following the close of the last calendar year in which the entity relied upon the certification.

(C) *Foreign corporation that has made an election under section 897(i).* A foreign corporation that has made a valid election under section 897(i) to be treated as a domestic corporation for purposes of section 897 may provide a certification of non-foreign status pursuant to this paragraph (b)(3)(ii). However, an electing foreign corporation must attach to such certification a copy of the acknowledgment of the election provided to the corporation by the Internal Revenue Service pursuant to § 1.897–3(d)(4).

An acknowledgment is valid for this purpose only if it states that the information required by § 1.897–3 has been determined to be complete.

(D) *Sample certifications—(1) Individual interest-holder.*

''Under section 1445(e) of the Internal Revenue Code, a corporation, partnership, trust or estate must withhold tax with respect to certain transfers of property if a holder of an interest in the entity is a foreign person. To inform (*name of entity*) that no withholding is required with respect to my interest in it, I, (*name of interest-holder*), hereby certify the following:

1. I am not a nonresident alien for purposes of U.S. income taxation;

2. My U.S. taxpayer identifying number (Social Security number) is _____; and

3. My home address is

_____

_____

I agree to inform [name of entity] promptly if I become a nonresident alien at any time during the three years immediately following the date of this notice.

I understand that this certification may be disclosed to the Internal Revenue Service by (*name of entity*) and that any false statement I have made here could be punished by fine, imprisonment, or both.

Under penalties of perjury I declare that I have examined this certification and to the best of my knowledge and belief it is true, correct, and complete.

[*Signature and date*]''

(*2*) *Entity interest-holder.* ''Under section 1445(e) of the Internal Revenue Code, a corporation, partnership, trust, or estate must withhold tax with respect to certain transfers of property if a holder of an interest in the entity is a foreign person. To inform [*name of entity*] that no withholding is required with respect to [*name of interest-holder*]'s interest in it, the undersigned hereby certifies the following on behalf of [*name of interest-holder*]:

1. [*Name of interest-holder*] is not a foreign corporation, foreign partnership, foreign trust, or foreign estate (as those terms are defined in the Internal Revenue Code and Income Tax Regulations);

2. [*Name of interest-holder*]'s U.S. employer identification number is _____; and

3. [*Name of interest-holder*]'s office address is

_____

and place of incorporation (if applicable) is

_____

[*Name of interest holder*] agrees to inform [*name of entity*] if it becomes a foreign person at any time during the three year period immediately following the date of this notice.

[*Name of interest-holder*] understands that this certification may be disclosed to the Internal Revenue Service by [*name of entity*] and that any false statement contained herein could be punished by fine, imprisonment, or both.

Under penalties of perjury I declare that I have examined this certification and to the best of my knowledge and belief it is true, correct, and complete, and I further declare that I have authority to sign this document on behalf of [*name of interest-holder*].

[*Signature and date*]

[*Title*]''

(iii) *Reliance upon certification not permitted.* An entity or fiduciary may not rely upon an interest-holder's certification of non-foreign status if, prior to or at the time of the transfer with respect to which withholding would be required, the entity or fiduciary either—

(A) Has actual knowledge that the certification is false;

(B) Has received a notice that the certification is false from a transferor's or transferee's agent, pursuant to § 1.1445–4; or

(C) Has received from a corporation that it knows to be a foreign corporation a certification that does not have attached to it a copy of the IRS acknowledgment of the corporation's election under section 897(i), as required by paragraph (b)(3)(ii)(C) of this section. Such an entity's or fiduciary's withholding obligations shall apply as if a statement had never been given, and such an entity or fiduciary may be held fully liable pursuant to § 1.1445–1(e) for any failure to withhold. For special rules concerning an entity's belated receipt of a notice concerning a false certification, see paragraphs (c)(2)(ii) and (e)(2)(iii) of this section.

(4) *Property transferred not a U.S. real property interest*—(i) *In general.* Pursuant to the provisions of paragraphs (c) and (d) of this section, an entity or fiduciary is required to withhold with respect to certain transfers of property, if the property transferred is a U.S. real property interest. (In addition, taxable distributions of U.S. real property interests by domestic or foreign partnerships, trusts, and estates will be subject to withholding pursuant to section 1445(e)(4) and paragraph (f) of this section after publication of a Treasury decision under sections 897 (e)(2) and (g). As defined in section 897(c) and § 1.897–1(c), a U.S. real property interest includes certain interests in U.S. corporations, as well as direct interests in real property and certain associated personal property. This paragraph (b)(4) provides rules pursuant to which an entity (or fiduciary thereof) that transfers an interest in a U.S. corporation may determine that withholding is not required because the interest transferred is not a U.S. real property interest. To determine whether an interest in tangible property constitutes a U.S. real property interest the transfer of which would be subject to withholding, see § 1.897–1 (b) and (c).

(ii) *Interests in publicly traded entities.* Withholding is not required under paragraph (c) or (d) of this section upon an entity's transfer of an interest in a domestic corporation if any class of stock of the corporation is regularly traded on an established securities market. This exemption shall apply to a disposition incident to an initial public offering of stock pursuant to a registration statement filed with the Securities and Exchange Commission.

Similarly, no withholding is required under paragraph (c) or (d) of this section upon an entity's transfer of an interest in a publicly traded partnership or trust. However, the rule of this paragraph (b)(4)(ii) shall not apply to the transfer, to a single transferee (or related transferees as defined in § 1.897–1(i)) in a single transaction (or related transactions), of an interest described in § 1.897–1(c)(2)(iii)(B) (relating to substantial amounts of non-publicly traded interests in publicly traded corporations) or of similar interests in publicly traded partnerships or trusts. The entity making a transfer described in the preceding sentence must otherwise determine whether withholding is required, pursuant to section 1445(e) and the regulations thereunder. Transactions shall be deemed to be related if they are undertaken within 90 days of one another or if it can otherwise be shown that they were undertaken in pursuance of a prearranged plan.

(iii) *Corporation's statement that interest is not a U.S. real property interest.* (A) *In general.* No withholding is required under paragraph (c) or (d) of this section upon an entity's transfer of an interest in a domestic corporation if, prior to the transfer, the entity or fiduciary obtains a statement, issued by the corporation pursuant to § 1.897–2(h), certifying that the interest is not a U.S. real property interest. In general, a corporation may issue such a statement only if the corporation was not a U.S. real property holding corporation at any time during the previous five years (or the period in which the interest was held by its present holder, if shorter) or if interests in the corporation ceased to be United States real property interests under section 897(c)(1)(B). (A corporation may not provide such a statement based on its determination that the interest in question is an interest solely as a creditor.) See § 1.897–2 (f) and (h). A corporation's statement may be relied upon for

purposes of this paragraph (b)(4)(iii) only if the statement is dated not more than 30 days prior to the date of the transfer.

(B) *Reliance on statement not permitted.* An entity or fiduciary is not entitled to rely upon a statement that an interest in a corporation is not a U.S. real property interest, if, prior to or at the time of the transfer, the entity or fiduciary either—

(*1*) Has actual knowledge that the statement is false, or

(*2*) Receives a notice that the statement is false from a transferor's or transferee's agent, pursuant to §1.1445–4.

Such an entity's or fiduciary's withholding obligations shall apply as if a statement had never been given, and such an entity or fiduciary may be held fully liable pursuant to §1.1445–1(e) for any failure to withhold. For special rules concerning an entity's belated receipt of a notice concerning a false statement, see paragraphs (c)(2)(iii) and (d)(2)(i) of this section.

(5) *Reporting and paying over of withheld amounts*—(i) *In General.* An entity or fiduciary must report and pay over to the Internal Revenue Service any tax withheld pursuant to section 1445(e) and this section by the 20th day after the date of the transfer (as defined in §1.1445–1(g)(8). Forms 8288 and 8288–A are used for this purpose and must be filed at the location as provided in the instructions to Forms 8288 and 8288–A. The contents of Forms 8288 and 8288–A are described in §1.1445–1(d). Pursuant to section 7502 and regulations thereunder, the timely mailing of Forms 8288 and 8288–A by U.S. mail will be treated as their timely filing. Form 8288–A will be stamped by the Internal Revenue Service to show receipt, and a stamped copy will be mailed by the Service to the interest holder if the Form 8288 is complete, including the transferor's identifying number, at the address shown on the form, for the interest-holder's use. See paragraph (b)(7) of this section. If an application for a withholding certificate with respect to a transfer of a U.S. real property interest was submitted to the Internal Revenue Service on the day of or at any time prior to the transfer, the entity or fiduciary must withold the amount required under section 1445(e) and the rules of this section. However, the amount withheld, or a lesser amount as determined by the Service, need not be reported and paid over to the Service until the 20th day following the Service's final determination. For this purpose, the Service's final determination occurs on the day when the withholding certificate is mailed to the applicant by the Service or when a notification denying the request for a withholding certificate is mailed to the applicant by the Service. An application is submitted to the Service on the day it is actually received by the Service at the address provided in §1.1445–1(g)(10) or, under the rules of section 7502, on the day it is mailed to the Service at the address provided in §1.1445–1(g)(10). For rules concerning the issuance of withholding certificates, see §1.1445–6.

(ii) *Anti-abuse rule.* An entity or fiduciary that in reliance upon the rules of this paragraph (b)(5)(ii) fails to report and pay over amounts withheld by the 20th day following the date of the transfer, shall be subject to the payment of interest and penalties if the relevant application for a withholding certificate (or an amendment of the application for a withholding certificate) was submitted for a principle purpose of delaying the payment to the IRS of the amount withheld. Interest and penalties shall be assessed on the amount that is ultimately paid over, with respect to the period between the 20th day after the date of the transfer and the date on which payment is made.

(6) *Liability upon failure to withhold.* For rules regarding liability upon failure to withhold under section 1445(e) and this §1.1445–5, see §1.1445–1(e).

(7) *Effect of withholding by entity or fiduciary upon interest holder.* The withholding of tax under section 1445(e) does not excuse a foreign person that is subject to U.S. tax by reason of the operation of section 897 from filing a U.S. tax return. Thus, Form 1040NR. 1041. or 1120F, as appropriate must be filed and any tax due must be paid, by the filing date otherwise applicable to such person (or any extension thereof). The tax withheld with respect to the foreign person under section 1445(e) (as shown on Form 8288–A) shall be credited against the amount of income tax as

computed in such return, but only if the stamped copy of Form 8288–A provided to the entity or fiduciary (under paragraph (b)(5) of this section) is attached to the return or substantial evidence of the amount of tax withheld is attached to the return in accordance with the succeeding sentence. If a stamped copy of Form 8288–A has not been provided to the interest-holder by the Service, the interest-holder may establish the amount of tax withheld by the entity or fiduciary by attaching to its return substantial evidence of such amount. Such an interest-holder must attach to its return a statement which supplies all of the information required by §1.1445–1(d)(2). If the amount withheld under section 1445(e) constitutes less than the full amount of the foreign person's U.S. tax liability for that taxable year, then a payment of estimated tax may be required to be made pursuant to section 6154 or 6654 prior to the filing of the income tax return for the year. Alternatively, if the amount withheld under section 1445(e) exceeds the foreign person's maximum tax liability with respect to the transaction (*as reflected* in a withholding certificate issued by the Internal Revenue Service pursuant to §1.1445–6), then the foreign person may seek an early refund of the excess pursuant to §1.1445–6(g). A foreign person that takes gain into account in accordance with the provisions of section 453 shall not be entitled to a refund to the amount withheld, unless a withholding certificate providing for such a refund is obtained pursuant to §1.1445–6. If an entity or fiduciary withholds tax under section 1445(e) with respect to a beneficial owner of an interest who is not a foreign person, such beneficial owner may credit the amount of any tax withheld against his income tax liability in accordance with the provisions of this §1.1445–5(b)(7) or apply for an early refund under §1.1445–6(g).

(8) *Effective dates*—(i) *Partnership, trust, and estate dispositions of U.S. real property interests.* The provisions of section 1445(e)(1) and paragraph (c) of this section, requiring withholding upon certain dispositions of U.S. real property interests by domestic partnerships, trusts, and estates, shall apply to any disposition on or after January 1, 1985.

(ii) *Certain distributions by foreign corporations.* The provisions of section 1445(e)(2) and paragraph (d) of this section, requiring withholding upon distributions of U.S. real property interests by foreign corporations shall apply to distributions made on or after January 1, 1985.

(iii) *Distributions by certain domestic corporations to foreign shareholders.* The provisions of section 1445(e)(3) and paragraph (e)(1) of this section, requiring withholding upon distributions in redemption of stock under section 302(a) or liquidating distributions under Part II of subchapter C of the Internal Revenue Code by U.S. real property holding corporations to foreign shareholders, shall apply to distributions made on or after January 1, 1985. The provisions of section 1445(e)(3) and paragraph (e)(1) of this section requiring withholding on distributions under section 301 by U.S. real property holding corporations to foreign shareholders shall apply to distributions made after August 20, 1996. The provisions of paragraph (e) of this section providing for the coordination of withholding between sections 1445 and 1441 (or 1442 or 1443) for distributions under section 301 by U.S. real property holding corporations to foreign shareholders apply to distributions after December 31, 2000 (see §1.1441–3(c)(4) and (h)).

(iv) *Taxable distributions by domestic or foreign partnerships, trusts, and estates.* The provisions of section 1445(e)(4), requiring withholding upon certain taxable distributions by domestic or foreign partnerships, trusts, and estates, shall apply to distributions made on or after the effective date of a Treasury decision under section 897 (e)(2)(B)(ii) and (g).

(v) [Reserved]

(vi) *Tiered Partnerships.* No withholding is required upon the disposition of a U.S. real property interest by a partnership which is directly owned, in whole or in part, by another domestic partnership (but only to the extent that the amount realized is attributable to the partnership interest of

that other partnership) until the effective date of a Treasury Decision published under section 1445(e) providing rules governing this matter.

(c) *Dispositions of U.S. real property interests by domestic partnerships, trusts, and estates*—(1) *Withholding required*—(i) *In general.* If a domestic partnership, trust, or estate disposes of a U.S. real property interest and any partner, beneficiary, or owner of the entity is a foreign person, then the partnership or the trustee, executor, or equivalent fiduciary of the trust or estate must withhold tax with respect to each such foreign person in accordance with the provisions of subdivision (ii), (iii), or (iv), of this paragraph (c)(1) (as applicable). The withholding obligation imposed by this paragraph (c) applies to the fiduciary of a trust even if the grantor of the trust or another person is treated as the owner of the trust or any portion thereof for purposes of the Internal Revenue Code. Thus, the withholding obligation imposed by this paragraph (c) applies to the trustee of a land trust or similar arrangement, even if such a trustee is not ordinarily treated under the applicable provisions of local law as a true fiduciary.

(ii) *Disposition by partnership.* A partnership must withhold a tax equal to 35 percent (or the highest rate specified in section 1445(e)(1)) of each foreign partner's distributive share of the gain realized by the partnership upon the disposition of each U.S. real property interest. Such distributive share of the gain must be determined pursuant to the principles of section 704 and the regulations thereunder. For the rules applicable to partnerships, interests in which are regularly traded on an established securities market, see §1.1445–8.

(iii) *Disposition by trust or estate*—(A) *In general.* A trustee, fiduciary, executor or equivalent fiduciary (hereafter collectively referred to as the fiduciary) of a trust or estate having one or more foreign beneficiaries must withhold tax in accordance with the rules of this §1.1445–5(c)(1)(iii). Such a fiduciary must establish a U.S. real property interest account and must enter in such account all gains and losses realized during the taxable year of the trust or estate from dispositions of U.S. real property interests. The fiduciary must withhold 35 percent (or the highest rate specified in section 1445(e)(1)) of any distribution to a foreign beneficiary that is attributable to the balance in the U.S. real property interest account on the day of the distribution. A distribution from a trust or estate to a beneficiary (domestic or foreign) shall, solely for purposes of section 1445(e)(1), be deemed to be attributable first to any balance in the U.S. real property interest account and then to other amounts. However, a distribution that occurs prior to the transfer of a U.S. real property interest in a taxable year or at any other time when the amount contained in the U.S. real property interest account is zero, is not subject to withholding under this §1.1445–5(c)(1)(iii). The U.S. real property interest account is reduced by the amount distributed to all beneficiaries (domestic and foreign) attributable to such account during the taxable year of the trust or estate. Any ending balance of the U.S. real property interest account not distributed by the close of the taxable year of the trust or estate is cancelled and is not carried over (or carried back) to any other year. Thus, the beginning balance of such account in any taxable year of the trust or estate is always zero. For rules applicable to grantor trusts see §1.1445–5(c)(1)(iv). For rules applicable to trusts, interests in which are regularly traded on an established securities market and real estate investment trusts, see §1.1445–8.

(B) *Example.*The following example illustrates the rules of paragraph (c)(1)(iii)(A) of this section.

On January 1, 1994, A establishes a domestic trust (which has as its taxable year, the calendar year) for the benefit of B, a nonresident alien, and C, a U.S. citizen. The trust is not a trust subject to sections 671 through 679. Under the terms of the trust, the trustee, T, is given discretion to distribute income and corpus of the trust to provide for the reasonable needs of B and C. During the trust's 1994 tax year, T disposes of three parcels of vacant land located in the United States. The following chart illustrates the computation of the amount subject to withholding under section 1445 with respect to distributions made by T to B and C during 1994.

Date	Parcel sold	Gains or (loss) realized	Distributions to C	Distributions to B (before withholding)	Section 1445 withholding 35% rate	U.S. real property interest account
1/01/94						-0-
3/01/94	Parcel 1	140,000				140,000
3/05/94			5,000	10,000	3,500	125,000
3/15/94			10,000	5,000	1,750	110,000
5/01/94	Parcel 2	300,000				410,000
5/15/94	Parcel 3	(50,000)				360,000
12/01/94			170,000	170,000	59,500	20,000
1/01/95						-0-

(iv) *Disposition by grantor trust.* The trustee or equivalent fiduciary of a trust that is subject to the provisions of subpart E of part 1 of subchapter J (sections 671 through 679) must withhold a tax equal to 35 percent (or the highest rate specified in section 1445(e)(1)) of the gain realized from each disposition of a U.S. real property interest to the extent such gain is allocable to a portion of the trust treated as owned by a foreign person under subpart E of part 1 of subchapter J.

(2) *Withholding not required under paragraph (c)*—(i) [Reserved]

(ii) *Interest-holder not a foreign person*—(A) *In general.* A domestic partnership, trust, or estate that disposes of a U.S. real property interest shall not be required to withhold with respect to any partner or beneficiary that it determines, pursuant to the rules of paragraph (b)(3) of this section, not to be a foreign person.

(B) *Belated notice of false certification.* If after the date of the transfer a partnership or fiduciary learns that a partner's or beneficiary's certification of non-foreign status is false, then that partnership or fiduciary shall be required to withhold, with respect to the foreign partner or beneficiary that gave the false certification, the lessor of—

(*1*) The amount otherwise required to be withheld under the rules of this paragraph (c), or

(*2*) An amount equal to that partner's or beneficiary's remaining interests in the income or assets of the partnership, trust, or estate. Amounts so withheld must be reported and paid over by the 60th day following the date on which the partnership or fiduciary learns that the certification is false. For rules concerning the notifications of false certifications that may be required to be given to partnerships and fiduciaries, see § 1.1445–4(b).

(iii) *Property disposed of not a U.S. real property interest*—(A) *In general.* No withholding is required under this paragraph (c) if a domestic partnership, trust, or estate that disposes of property determines pursuant to the rules of paragraph (b)(4) of this section that the property disposed of is not a U.S. real property interest.

(B) *Belated notice of false statement.* If after the date of the transfer a partnership or fiduciary learns that a corporation's statement (that an interest in the corporation is not a U.S. real property interest) is false, then that partnership or fiduciary shall be required to withhold, with respect to each foreign partner or beneficiary, the lesser of—

(*1*) The amount otherwise required to be withheld under the rules of this paragraph (c), or

(*2*) An amount equal to that partner's or beneficiary's remaining interests in the income or assets of the parnership, trust, or estate.

Amounts so withheld must be reported and paid over by the 60th day following the date on which the partnership or fiduciary learns that the statement is false. For rules concerning the notifications of false statements that may be required to be given to partnerships or fiduciaries, see § 1.1445–4(b).

(iv) *Withholding certificate.* No withholding is required under this paragraph (c) with respect to the transfer of a U.S. real property interest if the Internal Revenue Service issues a withholding certificate that so provides. For rules concerning the issuance of withholding certificates, see § 1.1445–6.

(v) *Nonrecognition transactions.* For special rules concerning transactions entitled to nonrecognition of gain or

loss, see paragraph (b)(2) of this section.

(3) *Large partnerships or trusts*—(i) *In general*. If a partnership or trust has more than 100 partners or beneficiaries, then the partnership or fiduciary of the trust may elect to withhold in accordance with the provisions of this §1.1445–5(c)(3) in lieu of withholding in the manner required by §1.1445–5(c)(1). However, the rules of this §1.1445–5(c)(3) shall not apply to any partnership or trust interests in which are regularly traded on an established securities market except as described in §1.1445–8(c)(1). The rules of this §1.1445–5(c)(3) shall not apply to any real estate investment trust. See §1445–8.

(ii) *Amount to be withheld*. A partnership or trust electing to withhold under this §1.1445–5(c)(3) shall withhold from each distribution to a foreign person an amount equal to 35 percent (or the highest rate specified in section 1445(e)(1)) of the amount attributable to section 1445(e)(1) transfers.

(iii) *Amounts attributable to section 1445(e)(1) transfers*. A distribution is attributable to section 1445(e)(1) transfers to the extent of the partner's or beneficiary's proportionate share of the current balance of the entity's section 1445(e)(1) account. A distribution from a partnership or trust that has made an election under this §1.1445–5(c)(3) shall be deemed first to be attributable to a section 1445(e)(1) transfer to the extent of the balance in the section 1445(e)(1) account. An entity's section 1445(e)(1) account shall be equal to—

(A) The total amount of net gain realized by the entity upon all transfers of U.S. real property interests carried out by the entity after the date of its election under this §1.1445–5(c)(3); minus

(B) The total amount of all distributions by the entity to domestic and foreign distributees from such account.

(iv) *Special rules for entities that make recurring sales of growing crops and timber*. An entity that makes an election under §1.1445–5(c)(3) and that makes recurring sales of growing crops and timber may further elect to determine the amount subject to withholding under the rules of this §1.1445–5(c)(3)(iv). Such an entity must withhold from each distribution to a foreign partner or beneficiary an amount equal to 10 percent of such partner's or beneficiary's proportionate share of the current balance of the entity's gross section 1445(e)(1) account. An entity's gross section 1445(e)(1) account equals—

(A) The total amount realized by the entity upon all transfers of U.S. real property interests carried out by the entity after the date of its election under this §1.1445–5(c)(3)(iv); minus

(B) The total amount of all distributions to domestic and foreign distributees from such account.

An entity that elects to compute the amount subject to withholding under this §1.1445–5(c)(3)(iv), shall make such election in accordance with §1.1445–5(c)(3)(vi) and shall be subject to the provisions otherwise applicable under §1.1445–5(c)(3).

(v) *Procedural rules*. An election under paragraph (c)(3) may be made by filing a notice thereof with the Director, Philadelphia Service Center, at the address provided in §1.1445–1(g)(10). The notice must be submitted by a general partner (in the case of a partnership) or the trustee or equivalent fiduciary (in the case of a trust). The notice must set forth the name, office address, and identifying number of the partnership or fiduciary making the election, and, in the case of a partnership, must include the name, office address, and identifying number of the general partner submitting the election. An election under this paragraph (c)(3) may be revoked only with the consent of the Internal Revenue Service. Consent of the Service may be requested by filing an application to revoke the election with the Director, Philadelphia Service Center at the address stated above. This application must include all information provided to the Service with the election notice and must provide an explanation of the reasons for revoking the election. The application to revoke an election must also specify the amount remaining to be distributed in the section 1445(e)(1) account or the gross section 1445(e)(1) account.

An entity that ceases to qualify under section 1.1445–5(c)(3) because such entity does not have more than 100 partners or beneficiaries may revoke its election only with the consent of the Internal Revenue Service.

(d) *Distributions of U.S. real property interests by foreign corporations*—(1) *In general.* A foreign corporation that distributes a U.S. real property interest must deduct and withhold a tax equal to 35 percent (or the rate specified in section 1445(e)(2)) of the amount of gain recognized by the corporation on the distribution. The amount of gain required to be recognized by the corporation must be determined pursuant to the rules of section 897 and any other applicable section. For special rules concerning the applicability of a nonrecognition provision to a distribution, see paragraph (b)(2) of this section. The withholding liability imposed by this paragraph (d) applies to the same taxpayer that owes the related substantive income tax liability pursuant to the operation of section 897. Only one such liability will be assessed and collected from a foreign corporation, but separate penalties for failures to comply with the two requirements will be asserted.

(2) *Withholding not required*—(i) *Property distributed not a U.S. real property interest*—(A) *In general.* No withholding is required under this paragraph (d) if a foreign corporation that distributes property determines pursuant to the rules of paragraph (b)(3) of this section that the property distributed is not a U.S. real property interest.

(B) *Belated notice of false statement.* If after the date of a distribution described in paragraph (d)(1) of this section a foreign corporation learns that another corporation's statement (that an interest in that other corporation is not a U.S. real property interest) is false, then the foreign corporation may not rely upon that statement for any purpose. Such a foreign corporation's withholding obligations under this paragraph (d) shall apply if a statement had never been given, and such a corporation may be held fully liable pursuant to §1.1445–5(b)(5) for any failure to withhold. Amounts withheld pursuant to the rule of this paragraph (d)(2)(i)(B) must be reported and paid over by the 60th day following the date on which the foreign corporation learns that the statement is false. No penalties or interest will be assessed for failures to withhold prior to that date. For rules concerning the notifications of false statements that may be required to be given to foreign corporations, see §1.1445–4(b).

(ii) *Withholding certificate.* No withholding is required under this paragraph (d) with respect to a foreign corporation's distribution of a U.S. real property interest if the distributing corporation obtains a withholding certificate from the Internal Revenue Service that so provides. For rules concerning the issuance of withholding certificates, see §1.1445–6.

(e) *Distributions to foreign persons by U.S. real property holding corporations*—(1) *In general.* A domestic corporation that distributes any property to a foreign person that holds an interest in the corporation must deduct and withhold a tax equal to 10 percent of the fair market value of the property distributed to the foreign person, if—

(i) The foreign person's interest in the corporation constitutes a U.S. real property interest under the provisions of section 897 and regulations thereunder; and

(ii) There is a distribution of property in redemption of stock treated as an exchange under section 302(a), in liquidation of the corporation pursuant to the provisions of Part II of subchapter C of the Internal Revenue Code (sections 331 through section 346), or with respect to stock under section 301 that is not made out of earnings and profits of the corporation.

(2) *Coordination rules for Section 301 distributions.* If a domestic corporation makes a distribution of property under section 301 to a foreign person whose interest in such corporation constitutes a U.S. real property interest under the provisions of section 897 and the regulations thereunder, then see §1.1441–3(c)(4) for rules coordinating withholding obligations under sections 1445 and 1441 (or 1442 or 1443)).

(3) *Withholding not required*—(i) *Foreign person's interest not a U.S. real property interest.* Withholding is required under this paragraph (e) only with respect to distributions to foreign persons holding interests in the corporation that constitute U.S. real property interests. In general, a foreign person's interest in a domestic corporation constitutes a U.S. real property interest if

the corporation was a U.S real property holding corporation at any time during the shorter of (A) the period in which the foreign person held the interest or (B) the previous five years (but not earlier than June 19, 1980). See section 897(c) and §§ 1.897–1(c) and 1.897–2 (b) and (h). However, an interest in such a corporation ceases to be a U.S. real property interest after all of the U.S. real property interests held by the corporation itself are disposed of in transactions on which gain or loss is recognized. See section 897(c)(1)(B) and § 1.897–2(f)(2). Thus, if a U.S. real property holding corporation in the process of liquidation does not elect section 337 nonrecognition treatment upon its sale of all U.S. real property interests held by the corporation, and recognizes gain or loss upon such sales, interests in that corporation cease to be U.S. real property interests. Therefore, no withholding would be required with respect to that corporation's subsequent liquidating distribution to a foreign shareholder of property other than a U.S. real property interest.

(ii) *Nonrecognition transactions.* For special rules concerning the applicability of a nonrecognition provision to a distribution described in paragraph (e)(1) of this section, see paragraph (b)(2) of this section.

(iii) *Interest-holder not a foreign person*—(A) *In general.* A domestic corporation shall not be required to withhold under this paragraph (e) with respect to a distribution of property to any distributee that it determines, pursuant to the rules of paragraph (b)(3) of this section, not to be a foreign person.

(B) *Belated notice of false certification.* If after the date of a distribution described in paragraph (e)(1) of this section a domestic corporation learns that an interest-holder's certification of non-foreign status is false, then the corporation may rely upon that certification only if the person providing the false certification holds (or held) less than 10 percent of the value of the outstanding stock of the corporation. With respect to less than 10 percent interest-holders, no withholding is required under this paragraph (e) upon receipt of a belated notice of false certification. With respect to 10 percent or greater interest-holders, the corporation's withholding obligations under this paragraph (e) shall apply as if a certification had never been given, and such a corporation may be held fully liable pursuant to § 1.1445–5(b)(6) for any failure to withhold as of the date specified in this § 1.1445–5(e)(3)(iii)(B). Amounts withheld pursuant to the rule of this paragraph (e)(3)(iii)(B) must be reported and paid over by the 60th day following the date on which the corporation learns that the certification is false. No penalties or interest for failures to withhold will be assessed prior to that date. For rules concerning the notifications of false certifications that may be required to be given to U.S. real property holding corporations, see § 1.1445–4(b).

(iv) *Withholding certificate.* No withholding, or reduced withholding, is required under this paragraph (e) with respect to a domestic corporation's distribution of property if the distributing corporation obtains a withholding certificate from the Internal Revenue Service that so provides. For rules concerning the issuance of withholding certificates, see § 1.1445–6.

(f) *Taxable distributions by domestic or foreign partnerships, trusts, or estates.* [Reserved]

(g) *Dispositions of interests in partnerships, trusts, and estates.* [Reserved]

(h) *Effective date for taxpayer identification numbers.* The requirement in paragraphs (b)(2)(ii)(B) and (C) of this section that taxpayer identification numbers be provided (in all cases) is applicable for dispositions of U.S. real property interests occurring after November 3, 2003.

[T.D. 8113, 51 FR 46642, Dec. 24, 1986; 52 FR 3796, 3917, Feb. 6, 1987, as amended at T.D. 8198, 53 FR 16230, May 5, 1988; T.D. 8321, 55 FR 50553, Dec. 7, 1990; T.D. 8647, 60 FR 66076, Dec. 21, 1995; 61 FR 7157, Feb. 26, 1996; T.D. 8734, 62 FR 53467, Oct. 14, 1997; T.D. 9082, 68 FR 46086, Aug. 5, 2003]

§ 1.1445–6 Adjustments pursuant to withholding certificate of amount required to be withheld under section 1445(e).

(a) *Withholding certificate for purposes of section 1445(e)*—(1) *In general.* Pursuant to the provisions of § 1.1445–5 (c)(2)(iv), (d)(2)(ii), and (e)(2)(iv), withholding under section 1445(e) may be reduced or eliminated pursuant to a

withholding certificate issued by the Internal Revenue Service in accordance with the rules of this § 1.1445–6. A withholding certificate may be issued in cases where adjusted withholding is appropriate (e.g., because of the applicability of a nonrecognition provision—see paragraph (c) of this section), where the relevant taxpayers are exempt from U.S. tax (see paragraph (d) of this section), or where an agreement for the payment of tax is entered into with the Service (see paragraph (e) of this section). A withholding certificate that is obtained prior to a transfer allows the entity or fiduciary to withhold a reduced amount or excuses withholding entirely. A withholding certificate that is obtained after a transfer has been made may authorize a normal refund or an early refund pursuant to paragraph (g) of this section. The Internal Revenue Service will act upon an application for a withholding certificate not later than the 90th day after it is received. (The Service may deny a request for a withholding certificate where, after due notice, an applicant fails to provide the information necessary to make a determination.) Solely for this purpose (i.e., determining the day upon which the 90 day period commences), an application is received by the Service on the date when all information necessary for the Service to make a determination is provided by the applicant. In no event, however, will a withholding certificate be issued without the transferor's identifying number. (For rules regarding whether an application has been timely submitted, see § 1.1445–5(b)(5)). The Internal Revenue Service will act upon an application for an early refund not later than the 90th day after it is received. An application for an early refund must either (i) include a copy of a withholding certificate issued by the Service with respect to the transaction, or (ii) be combined with an application for a withholding certificate. Where an application for an early refund is combined with an application for a withholding certificate, the Service will act upon both applications not later than the 90th day after receipt. Either an entity, a fiduciary, or a relevant taxpayer (as defined in paragraph (a)(2) of this section) may apply for a withholding certificate. An entity or fiduciary may apply for a withholding certificate with respect to all or less than all relevant taxpayers. For special rules concerning the issuance of a withholding certificate to a foreign corporation that has made an election under section 897(i), see § 1.1445–7(d).

(2) *Relevant taxpayer*. For purposes of this section, the term ''relevant taxpayer'' means any foreign person that will bear substantive income tax liability by reason of the operation of section 897 with respect to a transaction upon which withholding is required under section 1445(e).

(b) *Applications for withholding certificates*—(1) *In general*. An application for a withholding certificate pursuant to this § 1.1445–6 must be submitted in the manner provided in § 1.1445–3 (b). However, in lieu of the information required to be submitted pursuant to § 1.1445–3(b)(4), the applicant must provide the information required by paragraph (b)(2) of this section. In addition, the information required by paragraph (b)(3) of this section must be submitted with the application.

(2) *Basis for certificate*—(i) *Adjusted withholding*. If a withholding certificate is sought on the basis of a claim that adjusted withholding is appropriate, the application must include a calculation, in accordance with paragraph (c) of this section, of the maximum tax that may be imposed on each relevant taxpayer with respect to which adjusted withholding is sought. The application must also include all evidence necessary to substantiate the claimed calculation, such as records of adjustments to basis or appraisals of fair market value.

(ii) *Exemption*. If a withholding certificate is sought on the basis of a relevant taxpayer's exemption from U.S. tax, the application must set forth a brief statement of the law and facts that support the claimed exemption. See paragraph (d) of this section.

(iii) *Agreement*. If a withholding certificate is sought on the basis of an agreement for the payment of tax, the application must include a copy of the agreement proposed by the applicant and a copy of the security instrument (if any) proposed by the applicant. In

this regard, see paragraph (e) of this section.

(3) *Relevant taxpayers.* An application for withholding certificate pursuant to this section must include all of the following information: the name, identifying number, and home address (in the case of an individual) or office address (in the case of an entity) of each relevant taxpayer with respect to which adjusted withholding is sought.

(c) *Adjustment of amount required to be withheld.* The Internal Revenue Service may issue a withhold certificate that excuses withholding or that permits an entity or fiduciary to withhold an adjusted amount reflecting the relevant taxpayers' maximum tax liability. A relevant taxpayer's maximum tax liability is the maximum amount which that taxpayer could be required to pay as tax by reason of the transaction upon which withholding is required. In the case of an individual taxpayer that amount will generally be the gain realized by the individual, multiplied by the maximum individual income tax rate applicable to long term capital gain. In the case of a corporate taxpayer, that amount will generally be the gain realized by the corporation, multiplied by the maximum corporate income tax rate applicable to long term capital gain. However, that amount must be adjusted to take into account the following:

(1) Any reduction of tax to which the relevant taxpayer is entitled under the provisions of a U.S. income tax treaty;

(2) The effect of any nonrecognition provision that is applicable to the transaction;

(3) Any losses previously realized and recognized by the relevant taxpayer during the taxable year by reason of the operation of section 897;

(4) Any amount realized upon the subject transfer by the relevant taxpayer that is required to be treated as ordinary income under any provision of the Code; and

(5) Any other factor that may increase or reduce the tax upon the transaction.

(d) *Relevant taxpayer's exemption from U.S. tax*—(1) *In general.* The Internal Revenue Service will issue a withholding certificate that excuses withholding by an entity or fiduciary if it is established that a relevant taxpayer's income from the transaction will be exempt from U.S. tax. For the available exemptions, see paragraph (d)(2) of this section. If a relevant taxpayer is entitled to a reduction of (rather than an exemption from) U.S. tax, then the entity or fiduciary may obtain a withholding certificate to that effect pursuant to the provisions of paragraph (c) of this section.

(2) *Available exemptions.* A relevant taxpayer's income from a transaction with respect to which withholding is required under section 1445(e) may be exempt from U.S. tax because either:

(i) The relevant taxpayer is an integral part or controlled entity of a foreign government and the subject income is exempt from U.S. tax pursuant to section 892 and the regulations thereunder; or

(ii) The relevant taxpayer is entitled to the benefits of an income tax treaty that provides for such an exemption (subject to the limitations imposed by section 1125(c) of Pub. L. 96–499, which, in general overrides such benefits as of January 1, 1985).

(e) *Agreement for the payment of tax*—(1) *In general.* The Internal Revenue Service will issue a withholding certificate that excuses withholding or that permits an entity or fiduciary to withhold a reduced amount, if the entity, fiduciary, or a relevant taxpayer enters into an agreement for the payment of tax pursuant to the provisions of this paragraph (e). An agreement for the payment of tax is a contract between the Service and the entity, fiduciary, or relevant taxpayer that consists of two necessary elements. Those elements are—

(i) A contract between the Service and the other person, setting forth in detail the rights and obligations of each; and

(ii) A security instrument or other form of security acceptable to the Assistant Commissioner (International).

(2) *Contents of agreement*—(i) *In general.* An agreement for the payment of tax must cover an amount described in subdivision (ii) or (iii) of this paragraph (e)(2). The agreement may either

provide adequate security for the payment of the chosen amount with respect to the relevant taxpayer in accordance with paragraph (e)(3) of this section or provide for the payment of that amount through a combination of security and withholding of tax by the entity or fiduciary.

(ii) *Tax that would otherwise be withheld*. An agreement for the payment of tax may cover the amount of tax that would otherwise be required to be withheld with respect to the relevant taxpayer pursuant to section 1445(e). In addition to the amount computed pursuant to section 1445(e), the applicant must agree to pay interest upon that amount, at the rate established under section 6621, with respect to the period between the date on which withholding tax under section 1445(e) would otherwise be due and the date on which the relevant taxpayer's payment of tax with respect to the disposition will be due. The amount of interest agreed upon must be paid by the applicant regardless of whether or not the Service is required to draw upon any security provided pursuant to the agreement. The interest may be paid either with the return or by the Service drawing upon the security.

(iii) *Maximum tax liability*. An agreement for the payment of tax may cover the relevant taxpayer's maximum tax liability, determined in accordance with paragraph (c) of this section. The agreement must also provide for the payment of an additional amount equal to 25 percent of the amount determined under paragraph (c) of this section. This additional amount secures the interest and penalties that would accrue between the date of the relevant taxpayer's failure to file a return and pay tax with respect to the disposition, and the date of which the Service collects upon that liability pursuant to the agreement.

(iv) *Allocation of payment*. An agreement for the payment of tax pursuant to this section must set forth an allocation of the payment provided for by the agreement among the relevant taxpayers with respect to which the withholding certificate is sought. In the case of an agreement that covers an amount described in subdivision (ii) of this paragraph (e)(2), such allocation must be based upon the amount that would otherwise be required to be withheld with respect to each relevant taxpayer. In the case of an agreement that covers an amount described in subdivision (iii) of this paragraph (e)(2), such allocation must be based upon each relevant taxpayer's maximum tax liability.

(3) *Major types of security*. The major types of security that are acceptable to the Internal Revenue Service for purposes of this section are described in § 1.1445–3(e)(3).

(4) *Terms of security instrument*. Any security instrument that is furnished pursuant to this section must contain the terms described in § 1.1445–3(e)(4).

(f) *Amendments to application for withholding certificates*—(1) *In general*. An applicant for a withholding certificate may amend an otherwise complete application by submitting an amending statement to the Director, Philadelphia Service Center at the address provided in § 1.1445–1(g)(10). The amending statement shall provide the information required by § 1.1445–6(f)(3) and must be signed and accompanied by a penalties of perjury statement in accordance with § 1.1445–6(b).

(2) *Extension of time for the Service to process requests for withholding certificates*—(i) *In general*. If an amending statement is submitted, the time in which the Internal Revenue Service must act upon the amended application shall be extended by 30 days.

(ii) *Substantial amendments*. If an amending statement is submitted and the Service finds that the statement substantially amends to the facts of the underlying application or substantially alters the terms of the withholding certificate as requested in the initial application, the time within which the Service must act upon the amended application shall be extended by 60 days. The applicant shall be so notified.

(iii) *Amending statement received after the requested withholding certificate has been signed by the Director, Philadelphia Service Center*. If an amending statement is received after the withholding certificate, drafted in response to the underlying application, has been signed by the Director, Philadelphia Service Center or his delegate and prior to the

day such certificate is mailed to the applicant, the time in which the Service must act upon the amended application shall be extended by 90 days.

(3) *Information required to be submitted.* No particular form is required for an amending statement but the statement must provide the following information:

(i) *Identification of applicant.* The amending statement must set forth the name, address, and identifying number of the person submitting the amending statement.

(ii) *Date of application.* The amending statement must set forth the date of the underlying application for a withholding certificate.

(iii) *Real property interest to be (or that has been) transferred.* The amending statement must set forth a brief description of the real property interest with respect to which the underlying application for a withholding certificate was submitted.

(iv) *Amending information.* The amending statement must fully set forth the basis for the amendment including any modification of the facts supporting the application for a withholding certificate and any change sought in the terms of the withholding certificate.

(g) *Early refund of overwithheld amounts.* If the Internal Revenue Service issues a withholding certificate pursuant to this section, and an amount greater than that specified in the certificate was withheld by the entity or fiduciary, then pursuant to the rules of this paragraph (g) a relevant taxpayer may apply for an early refund of a proportionate share of the excess amount (without interest) prior to the date on which the relevant taxpayer's return is due (without extensions). An application for an early refund must be addressed to the Director, Philadelphia Service Center, at the address provided in §1.1445–1(g)(10). No particular form is required for the application, but the following information must be set forth in separate paragraphs numbered to correspond with the numbers given below:

(1) Name, address, and identifying number of the relevant taxpayer seeking the refund;

(2) Amount required to be withheld pursuant to withholding certificate;

(3) Amount withheld by entity or fiduciary (attach a copy of Form 8288–A stamped by IRS pursuant to §1.1445–5(b)(4) or provide substantial evidence of the amount withheld in the case of a failure to receive Form 8288–A, as provided in §1.1445–5(b)(7)); and

(4) Amount to be refunded to the relevant taxpayer.

An application for an early refund cannot be processed unless the required copy of Form 8288–A or substantial evidence of the amount withheld in the case of a failure to receive Form 8288–A (as provided in §1.1445–5(b)(7)) is attached to the application. If an application for a withholding certificate is submitted after the transfer takes place, then that application may be combined with an application for an early refund. The Service will act upon a claim for refund within the time limits set forth in §1.1445–6(a)(1).

(h) *Effective date for taxpayer identification numbers.* The requirement in paragraphs (b)(3), (f)(3)(i), and (g)(1) of this section that taxpayer identification numbers be provided (in all cases) is applicable for dispositions of U.S. real property interests occurring after November 3, 2003.

[T.D. 8113, 51 FR 46648, Dec. 24, 1986; 52 FR 3796, 3917, Feb. 6, 1987; T.D. 9082, 68 FR 46086, Aug. 5, 2003]

§1.1445–7 Treatment of foreign corporation that has made an election under section 897(i) to be treated as a domestic corporation.

(a) *In general.* Pursuant to section 897(i) a foreign corporation may elect to be treated as a domestic corporation for purposes of sections 897 and 6039C. A foreign corporation that has made such an election shall also be treated as a domestic corporation for purposes of the withholding required under section 1445, in accordance with the provisions of this section.

(b) *Withholding under section 1445(a)*—(1) *Dispositions by corporation.* A foreign corporation that has made an election under section 897(i) may provide a transferee with a certification of nonforeign status in connection with the corporation's disposition of a U.S. real

property interest. However, in accordance with the provisions of §§1.1445–2(b)(2)(ii) and 1.1445–5(b)(3)(ii)(C), such an electing foreign corporation must attach to such certification a copy of the acknowledgment of the election provided to the corporation by the Internal Revenue Service pursuant to §1.897–3(d)(4) which states that the information required by §1.897–3 has been determined to be complete.

(2) *Dispositions of interests in corporation*. Dispositions of interests in electing foreign corporations shall be subject to the withholding requirements of section 1445(a) and the rules of §§1.1445–1 through 1.1445–4. Therefore, if a foreign person disposes of an interest in such a corporation, and that interest is a U.S. real property interest under the provisions of section 897 and regulations thereunder, then the transferee is required to withhold under section 1445(a).

(c) *Withholding under section 1445(e)*. Because a foreign corporation that has made an election under section 897(i) is treated as a domestic corporation for purposes of determining withholding obligations under section 1445, such a corporation is not subject to the requirement of section 1445(e)(2) that a foreign corporation withhold at the corporate capital gain rate from the gain recognized upon the distribution of a U.S. real property interest. Such a corporation is subject to the provisions of section 1445(e)(3). Thus, if interests in an electing corporation constitute U.S. real property interests, then the corporation is required to withhold with respect to the non-dividend distribution of any property to an interest-holder that is a foreign person. See §1.1445–5(e). Dividend distributions (distributions that are described in section 301) shall be treated as provided in sections 897(f), 1441 and 1442. In addition, if interests in an electing foreign corporation do not constitute U.S. real property interests, then distributions by such corporation shall be treated as provided in sections 897(f) (if applicable), 1441 and 1442.

(Approved by the Office of Management and Budget under control number 545–0902)

[T.D. 8113, 51 FR 46650, Dec. 24, 1986; 52 FR 3796, Feb. 6, 1987]

§1.1445–8 Special rules regarding publicly traded partnerships, publicly traded trusts and real estate investment trusts (REITs).

(a) *Entities to which this section applies*. The rules of this section apply to—

(1) Any partnership or trust, interests in which are regularly traded on an established securities market (regardless of the number of its partners or beneficiaries), and

(2) Any REIT (regardless of the form of its organization).

For purposes of paragraph (a)(1) of this section, the rules of section 1445 (e)(1) and this section shall not apply to a publicly traded partnership (as defined in section 7704) which is treated as a corporation under section 7704(a), or to those entities that are classified as ''associations'' and taxed as corporations. See §301.7701–2.

(b) *Obligation to withhold*—(1) *In general*. An entity described in paragraph (a) of this section is not required to withhold under the provisions of §1.1445–5(c), which states the withholding requirements of domestic partnerships, trusts and estates upon the disposition of U.S. real property interests. Except as otherwise provided in this paragraph (b), an entity described in paragraph (a) of this section shall be liable to withhold tax upon the distribution of any amount attributable to the disposition of a U.S. real property interest, with respect to each holder of an interest in the entity that is a foreign person. The amount to be withhold is described in paragraph (c) of this section.

(2) *Publicly traded partnerships*. Publicly traded partnerships which comply with the withholding procedures under section 1446 will be deemed to have satisfied their withholding obligations under this paragraph (b).

(3) *Special rule for certain distributions to nominees*. In the case of a person that—

(i) Is a nominee (as defined in paragraph (d) of this section),

(ii) Receives a distribution attributable to the disposition of a U.S. real property interest directly from an entity described in paragraph (a) of this section or indirectly from such entity through a nominee,

(iii) Receives the distribution for payment to any foreign person, or the account of any foreign person, and

(iv) Receives a qualified notice pursuant to paragraph (f) of this section,

then the obligation to withhold in accordance with the general rules of section 1445(e)(1) and this paragraph (b) shall be imposed solely on that person to the extent of the amount specified by the qualified notice. A person obligated to withhold by reason of this paragraph (b)(3) is referred to as a withholding agent.

(4) *Person designated to act for withholding agent.* The rules stated in §1.1441–7(b) (1) and (2) regarding a person designated to act for a withholding agent shall apply for purposes of this section.

(5) *Effect of withholding exemption granted under §1.1441–4(f).* A letter issued by a district director under the provisions of §1.1441–4(f), which exempts a person from withholding under section 1441 or section 1442, shall also exempt that person from withholding under this paragraph (b), if—

(i) The letter identifies another person as the withholding agent for purposes of section 1441 or 1442, and

(ii) Such other person enters into a written agreement, with the district director who issued the letter, to be the withholding agent for purposes of this paragraph (b).

The exemption granted, and the corresponding withholding obligation imposed, by this paragraph (b)(5) shall apply with respect to the first distribution made after execution of the agreement described in the preceding sentence and shall continue to apply to all distributions made during the period in which the exemption granted under §1.1441–4(f) is in effect.

(6) *Payment other than in money.* The rule stated in §1.1441–7(c) regarding payment other than in money shall apply for purposes of this section.

(c) *Amount to be withheld*—(1) *Distribution from a publicly traded partnership or publicly traded trust.* The amount to be withheld under this section with respect to a distribution by a publicly traded partnership or publicly traded trust shall be computed in the manner described in §1.1445–5(c)(3) (ii) and (iii), subject to the rules of this section.

(2) *REITs*—(i) *In general.* The amount to be withheld with respect to a distribution by a REIT, under this section shall be equal to 35 percent (or the highest rate specified in section 1445(e)(1)) of the amount described in paragraph (c)(2)(ii) of this section.

(ii) *Amount subject to withholding*—(A) *In general.* Except as otherwise provided in paragraph (c)(2)(ii)(C) of this section, the amount subject to withholding is the amount of any distribution, determined with respect to each share or certificate of beneficial interest, designated by a REIT as a capital gain dividend, multiplied by the number of shares or certificates of beneficial interest owned by the foreign person. Solely for purposes of this paragraph, the largest amount of any distribution occurring after March 7, 1991 that could be designated as a capital gain dividend under section 857(b)(3)(C) shall be deemed to have been designated by a REIT as a capital gain dividend regardless of the amount actually designated.

(B) *Distribution attributable to net short-term capital gain from the disposition of a U.S. real property interest.* [Reserved]

(C) *Designation of prior distribution as capital gain dividend.* If a REIT makes an actual designation of a prior distribution, in whole or in part, as a capital gain dividend, such prior distribution shall not be subject to withholding under this section. Rather, a REIT must characterize and treat as a capital gain dividend distribution (solely for purposes of section 1445(e)(1)) each distribution, determined with respect to each share or certificate of beneficial interest, made on the day of, or any time subsequent to, such designation as a capital gain dividend until such characterized amounts equal the amount of the prior distribution designated as a capital gain dividend. The provisions of this paragraph shall not be applicable in any taxable year in which the REIT adopts a formal or informal resolution or plan of complete liquidation.

(iii) *Example.* The following example illustrates the rules of paragraph (c)(2)(ii)(C) of this section.

In the first quarter of 1988, XYZ REIT makes a dividend distribution of $2X. In the

second quarter of 1988, XYZ sells real property, recognizing a long term capital gain of $15X, and makes a dividend distribution of $5X. In the third quarter of 1988, XYZ makes a distribution of $3X. In the fourth quarter of 1988, XYZ sells real property recognizing a long term capital loss of $2X. Within 30 days after the close of the taxable year, XYZ designates a capital gain dividend for the year of $13X. It subsequently makes a fourth quarter distribution of $7X. Since XYZ has made an actual designation of prior distributions during the taxable year as capital gain dividends, withholding on those prior distributions will not be required. However, the REIT must characterize, solely for purposes of section 1445(e)(1), a total amount of $13X of dividend distributions as capital gain dividends. Therefore, the fourth quarter dividend distribution of $7X must be characterized as a capital gain dividend subject to withholding under this section. In addition, XYZ will be required to characterize an additional $6X of subsequent dividend distributions as capital gain dividends.

(d) *Definition of nominee.* For purposes of this section, the term ''nominee'' means a domestic person that holds an interest in an entity described in paragraph (a) of this section on behalf of another domestic or foreign person.

(e) *Determination of non-foreign status by withholding agent.* A withholding agent may rely on a certificate of non-foreign status pursuant to §1.1445–2(b) or on the statements and address provided to it on Form W–9 or a form that is substantailly similar to such form, to determine whether an interest holder is a domestic person. Reliance on these documents will excuse the withholding agent from liability imposed under section 1445(e)(1) in the absence of actual knowledge that the interest holder is a foreign person. A withholding agent may also employ other means to determine the status of an interest holder, but, if the agent relies on such other means and the interest holder proves, in fact, to be a foreign person, then the withholding agent is subject to any liability imposed pursuant to section 1445 and the regulations thereunder for failure to withhold.

(f) *Qualified notice.* A qualified notice for purposes of paragraph (b)(3)(iv) of this section is a notice given by a partnership, trust or REIT regarding a distribution that is attributable to the disposition of a U.S. real property interest in accordance with the notice requirements with respect to dividends described in 17 CFR 240.10b–17(b) (1) or (3) issued pursuant to the Securities Exchange Act of 1934, 15 U.S.C. 78a *et seq.* In the case of a REIT, a qualified notice is only a notice of a distribution, all or any portion of which the REIT actually designates, or characterizes in accordance with paragraph (c)(2)(ii)(C) of this section, as a capital gain dividend in accordance with 17 CFR 240.10b–17(b) (1) or (3), with respect to each share or certificate of beneficial interest. A deemed designation under paragraph (c)(2)(ii)(A) of this section may not be the subject of a qualified notice under this paragraph (f). A person described in paragraph (b)(3) of this section shall be treated as receiving a qualified notice at the time such notice is published in accordance wtih 17 CFR 240.10b–17(b) (1) or (3).

(g) *Reporting and paying over withheld amounts.* With respect to an amount withheld under this section, a withholding agent is not required to conform to the requirements of §1.1445–5(b)(5) but is required to report and pay over to the Internal Revenue Service any amount required to be withheld pursuant to the rules and procedures of section 1461, the regulations thereunder and §1.6302–2. Forms 1042 and 1042S are to be used for this purpose.

(h) *Early refund procedure not available.* The early refund procedure set forth in §1.1445–6(g) shall not apply to amounts withheld under the rules of this section. For adjustment of overwithheld amounts, see §1.1461.4.

(i) *Liability upon failure to withhold.* For rules regarding liability upon failure to withhold under §1445(e) and this section, see §1.1445–1(e).

[T.D. 8321, 55 FR 50553, Dec. 7, 1990; 56 FR 4542, Feb. 5, 1991, as amended by T.D. 8647, 60 FR 66077, Dec. 21, 1995]

§1.1445–10T Special rule for Foreign governments (temporary).

(a) This section provides a temporary regulation that, if and when adopted as a final regulation will add a new paragraph (d)(6) to §1.1445–2. Paragraph (b) of this section would then appear as paragraph (d)(6) of §1.1445–2.

(b) *Foreign government*—(1) *As transferor.* A foreign government is subject to U.S. taxation under section 897 on the disposition of a U.S. real property

interest except to the extent specifically otherwise provided in the regulations issued under section 892. A foreign government that disposes of a U.S. real property interest that is not subject to taxation as specifically provided by the regulations under section 892 may present a notice of nonrecognition treatment pursuant to paragraph (d)(2) of this section that specifically cites the provision of such regulation, and thereby avoids withholding by the transferee of the property. A foreign government that disposes of a U.S. real property interest or the transferee of the property may obtain a withholding certificate from the Internal Revenue Service that confirms the applicability of section 892, but neither is required to do so. Rules concerning the issuance of withholding certificates are provided in § 1.1445–3.

(2) *As transferee.* A foreign government or international organization that acquires a U.S. real property interest is fully subject to section 1445 and the regulations thereunder. Therefore, such an entity is required to withhold tax upon the acquisition of a U.S. real property interest from a foreign person.

(c) *Effective date.* The rules of this section shall be effective for transfers, exchanges, distributions and other dispositions occuring on or after June 6, 1988.

[T.D. 8198, 53 FR 16230, May 5, 1988]

§ 1.1445–11T Special rules requiring withholding under § 1.1445–5 (temporary).

(a) *Purpose and scope.* This section provides temporary regulations that, if and when adopted as a final regulation will add certain new paragraphs within § 1.1445–5 (b) and (c). The paragraphs of this section would then appear as set forth below. Paragraph (b) of this section would then appear as paragraph (b)(8)(v) of § 1.1445–5. Paragraph (c) of this section would then appear as paragraph (c)(2)(i) of § 1.1445–5. Paragraph (d) of this section would then appear as paragraph (g) of § 1.1445–5.

(b) *Dispositions of interests in partnerships, trusts, and estates.* The provisions of section 1445(e)(5), requiring withholding upon certain dispositions of interests in partnerships, trusts, and estates, that own directly or indirectly a U.S. real property interest shall apply to dispositions on or after the effective date of a later Treasury decision under section 897(g) of the Code except in the case of dispositions of interests in partnerships in which fifty percent of the value of the gross assets consist of U.S. real property interests and ninety percent or more of the value of the gross assets consist of U.S. real property interests plus any cash or cash equivalents. The provisions of section 1445(e)(5), shall apply, however, to dispositions after June 6, 1988, of interests in partnerships in which fifty percent or more of the value of the gross assets consist of U.S. real property interests, and ninety percent or more of the value of the gross assets consist of U.S. real property interests plus any cash or cash equivalents. See paragraph (d) of this section.

(c) *Transactions covered elsewhere.* No withholding is required under this paragraph (c) with respect to the distribution of a U.S. real property interest by a partnership, trust, or estate. Such distributions shall be subject to withholding under section 1445(e)(4) and paragraph (f) of this § 1.1445–5 on the effective date of a later Treasury decision published under section 897(g) of the Code. No withholding is required at this time for distributions described in the preceding sentence. See paragraph (b)(8)(iv) of this § 1.1445–5. No withholding is required under this paragraph with respect to the disposition of an interest in a trust, estate, or partnership except in the case of a partnership in which fifty percent or more of the value of the gross assets consist of U.S. real property interests, and ninety percent or more of the value of the gross assets consist of U.S. real property interests plus any cash or cash equivalents. See paragraph (b)(8)(v) of § 1.1445–5. Withholding shall be required as provided in section 1445(e)(5) and paragraph (g) of this section with respect to the disposition after June 6, 1988, of an interest in a partnership in which fifty percent or more of the value of the gross assets consist of U.S. real property interests, and ninety percent or more of the value of the gross assets consist of U.S.

real property interests plus any cash or cash equivalents.

(d) *Dispositions of interests in partnerships, trusts or estates*—(1) *Withholding required on disposition of certain partnership interests.* Withholding is required under section 1445(e)(5) and this paragraph with respect to the disposition by a foreign partner of an interest in a domestic or foreign partnership in which fifty percent or more of the value of the gross assets consist of U.S. real property interests, and ninety percent or more of the value of the gross assets consist of U.S. real property interests plus any cash or cash equivalents. For purposes of this paragraph cash equivalents mean any asset readily convertible into cash (whether or not denominated in U.S. dollars), including, but not limited to, bank accounts, certificates of deposit, money market accounts, commercial paper, U.S. and foreign treasury obligations and bonds, corporate obligations and bonds, precious metals or commodities, and publicly traded instruments. The taxpayer on filing an income tax return for the year of the disposition may demonstrate the extent to which the gain on the disposition of the interest is not attributable to U.S. real property interests. A taxpayer is also permitted by §1.1445–3 to apply for a withholding certificate in instances where reduced withholding is approporiate.

(2) *Withholding not required*—(i) *Transferee receives statement that interest in partnership is not described in paragraph (d)(1).* No withholding is required under paragraph (d)(1) of this section upon the disposition of a partnership interest otherwise described in that paragraph if the transferee is provided a statement, issued by the partnership and signed by a general partner under penalties of perjury no earlier than 30 days before the transfer, certifying that fifty percent or more of the value of the gross assets does not consist of U.S. real property interests, or that ninety percent or more of the value of the gross assets of the partnership does not consist of U.S. real property interests plus cash or cash equivalents.

(ii) *Reliance on statement not permitted.* A transferee is not entitled to rely upon a statement described in paragraph (d)(2)(i) of this section if, prior to or at the time of the transfer, the transferee either—

(A) Has actual knowledge that the statement is false, or

(B) Receives a notice, pursuant to §1.1445–4.

Such a transferee's withholding obligations shall apply as if the statement had never been given, and such a transferee may be held fully liable pursuant to §1.1445–1(e) for any failure to withhold.

(iii) *Belated notice of false statement.* If, after the date of the transfer, a transferee receives notice that a statement provided under paragraph (d)(2)(i) of this section is false, then such transferee may rely on the statement only with respect to consideration that was paid prior to the receipt of the notice. Such a transferee is required to withhold a full 10 percent of the amount realized from the consideration that remains to be paid to the transferor. Thus, if 10 percent or more of the amount realized remains to be paid to the transferor, then the transferee is required to withhold and pay over the full 10 percent. The transferee must do so by withholding and paying over the entire amount of each successive payment of consideration to the transferor, until the full 10 percent of the amount realized has been withheld and paid over. Amounts so withheld must be reported and paid over by the 20th day following the date on which each such payment of consideration is made. A transferee that is subject to the rules of this §1.1445–10T(d)(2)(iii) may not obtain a withholding certificate pursuant to §1.1445–3, but must instead withhold and pay over the amounts required by this paragraph.

(e) *Effective date.* The rules of this section are effective for transactions after June 6, 1988.

[T.D. 8198, 53 FR 16231, May 5, 1988]

§1.1446–0 Table of contents.

This section lists the captions contained in §§1.1446–1 through 1.1446–7.

§1.1446–1 Withholding tax on foreign partners' share of effectively connected taxable income.

(a) In general.

(b) Steps in determining 1446 tax obligation.

(c) Determining whether a partnership has a foreign partner.
(1) In general.
(2) Submission of Forms W–8BEN, W–8IMY, W–8ECI, W–8EXP, and W–9.
(i) In general.
(ii) Withholding certificate applicable to each type of partner.
(A) U.S. person.
(B) Nonresident alien.
(C) Foreign partnership.
(D) Disregarded entities.
(E) Domestic and foreign grantor trusts.
(F) Nominees.
(G) Foreign governments, foreign tax-exempt organizations and other foreign persons.
(H) Foreign corporations, certain foreign trusts, and foreign estates.
(iii) Effect of Forms W–8BEN, W–8IMY, W–8ECI, W–8EXP, W–9, and statement.
(A) Partnership reliance on withholding certificate.
(B) Reason to know.
(C) Subsequent knowledge and impact on penalties.
(iv) Requirements for certificates to be valid.
(A) When period of validity expires.
(B) Required information for Forms W–8BEN, W–8IMY, W–8ECI, and W–8EXP.
(v) Partner must provide new withholding certificate when there is a change in circumstances.
(vi) Partnership must retain withholding certificates.
(3) Presumptions in the absence of valid Form W–8BEN, Form W–8IMY, Form W–8ECI, Form W–8EXP, Form W–9, or statement.
(4) Consequences when partnership knows or has reason to know that Form W–8BEN, Form W–8IMY, Form W–8ECI, Form W–8EXP, or Form W–9 is incorrect or unreliable and does not withhold.
(5) Acceptable substitute form.

§ 1.1446–2 Determining a partnership's effectively connected taxable income allocable to foreign partners under section 704.

(a) In general.
(b) Computation.
(1) In general.
(2) Income and gain rules.
(i) Application of the principles of section 864.
(ii) Income treated as effectively connected.
(iii) Exempt income.
(3) Deductions and losses.
(i) Oil and gas interests.
(ii) Charitable contributions.
(iii) Net operating losses and other suspended or carried losses.
(iv) Interest deductions.
(v) Limitation on capital losses.
(vi) Other deductions.
(vii) Limitations on deductions.
(4) Other rules.
(i) Exclusion of items allocated to U.S. partners.
(ii) Partnership credits.
(5) Examples.

§ 1.1446–3 Time and manner of calculating and paying over the 1446 tax.

(a) In general.
(1) Calculating 1446 tax.
(2) Applicable percentage.
(i) In general.
(ii) Special types of income or gain.
(b) Installment payments.
(1) In general.
(2) Calculation.
(i) General application of the principles of section 6655.
(ii) Annualization methods.
(iii) Partner's estimated tax payments.
(iv) Partner whose interest terminates during the partnership's taxable year.
(v) Exceptions and modifications to the application of the principles under section 6655.
(A) Inapplicability of special rules for large corporations.
(B) Inapplicability of special rules regarding early refunds.
(C) Period of underpayment.
(D) Other taxes.
(E) 1446 tax treated as tax under section 11.
(F) Application of section 6655(f).
(G) Application of section 6655(i).
(H) Current year tax safe harbor.
(I) Prior year tax safe harbor.
(3) 1446 tax safe harbor.
(i) In general.
(ii) Permission to change to standard annualization method.
(c) Coordination with other withholding rules.
(1) Fixed or determinable, annual or periodical income.
(2) Real property gains.
(i) Domestic partnerships.
(ii) Foreign partnerships.
(3) Coordination with section 1443.
(d) Reporting and crediting the 1446 tax.
(1) Reporting 1446 tax.
(i) Reporting of installment tax payments and notification to partners of installment tax payments.
(ii) Payment due dates.
(iii) Annual return and notification to partners.
(iv) Information provided to beneficiaries of foreign trusts and estates.
(v) Attachments required of foreign trusts and estates.
(vi) Attachments required of beneficiaries of foreign trusts and estates.
(vii) Information provided to beneficiaries of foreign trusts and estates that are partners in certain publicly traded partnerships.
(2) Crediting 1446 tax against a partner's U.S. tax liability.
(i) In general.

(ii) Substantiation for purposes of claiming the credit under section 33.
(iii) Special rules for apportioning the tax credit under section 33.
(A) Foreign trusts and estates.
(B) Use of domestic trusts to circumvent section 1446.
(iv) Refunds to withholding agent.
(v) 1446 tax treated as cash distribution to partners.
(vi) Examples.
(e) Liability of partnership for failure to withhold.
(1) In general.
(2) Proof that tax liability has been satisfied and deemed payment of 1446 tax.
(3) Liability for interest, penalties, and additions to the tax.
(i) Partnership.
(ii) Foreign partner.
(4) Examples.
(f) Effect of withholding on partner.

§ 1.1446–4 Publicly traded partnerships.

(a) In general.
(b) Definitions.
(1) Publicly traded partnership.
(2) Applicable percentage.
(3) Nominee.
(4) Qualified notice.
(c) Paying and reporting 1446 tax.
(d) Rules for designation of nominees to withhold tax under section 1446.
(e) Determining foreign status of partners.
(f) Distributions subject to withholding.
(1) In general.
(2) In-kind distributions.
(3) Ordering rule relating to distributions.
(4) Coordination with section 1445(e)(1).

§ 1.1446–5 Tiered partnership structures.

(a) In general.
(b) Reporting requirements.
(1) In general.
(2) Publicly traded partnerships.
(c) Look through rules for foreign upper-tier partnerships.
(d) Publicly traded partnerships.
(1) Upper-tier publicly traded partnership.
(2) Lower-tier publicly traded partnership.
(e) Election by a domestic upper-tier partnership to apply look through rules.
(1) In general.
(2) Information required for valid election statement.
(3) Consent of lower-tier partnership.
(f) Examples.

§ 1.1446–6 Special rules to reduce a partnership's 1446 tax with respect to a foreign partner's allocable share of effectively connected taxable income.

(a) In general.
(1) Purpose and scope.
(2) Reasonable reliance on a certificate.
(b) Foreign partners to whom this section applies.
(1) In general.
(2) Definitions.
(i) U.S. income tax return.
(ii) Timely-filed.
(iii) Qualifying U.S. income tax return.
(3) Special rules.
(c) Reduction of 1446 tax with respect to a foreign partner.
(1) General rules.
(i) Certified deductions and losses.
(A) Deductions and losses from the partnership.
(B) Deductions and loss from other sources.
(C) Limit on the consideration of a partner's net operating loss deduction.
(D) Limitation on losses subject to certain partner level limitations.
(E) Certification of deductions and losses to other partnerships.
(F) Partner level use of deductions and losses certified to a partnership.
(ii) De minimis certificate for nonresident alien individual partners.
(A) In general.
(B) Requirements for exception.
(iii) Consideration of certain current year state and local taxes.
(2) Form and time of certification.
(i) Form of certification.
(ii) Time of certification provided to partnership.
A) First certificate submitted for a partnership's taxable year.
(B) Updated certificates and status updates.
(*1*) Preceding year tax returns not yet filed.
(*2*) Other circumstances requiring an updated certificate.
(*3*) Form and content of updated certificate.
(*4*) Partnership consideration of an updated certificate.
(3) Notification to partnership when a partner's certificate cannot be relied upon.
(4) Partner to receive copy of notice.
(5) Notification to partnership when no foreign partner's certificate can be relied upon.
(6) Partnership notification to partner regarding use of deductions and losses.
(7) Partner's certificate valid only for partnership taxable year for which submitted.
(d) Effect of certificate of deductions and losses on partner and partnership.
(1) Effect on partner.
(i) No effect on liability for income tax of foreign partner.
(ii) No effect on partner's estimated tax obligations.
(iii) No effect on partner's obligation to file U.S. income tax return.
(2) Effect on partnership.
(i) Reasonable reliance to relieve partnership from addition to tax under section 6665.
(ii) Continuing liability for withholding tax under section 1461 and for applicable interest and penalties.
(A) In general.

(B) Certificate defective because of amount or character of deductions and losses.
(3) Partnership level rules and requirements.
(i) Filing requirement.
(ii) Reasonable cause for failure to timely file a valid certificate and computation.
(A) Determining reasonable cause.
(B) Notification.
(e) Examples.
(f) Effective/Applicability date.
(g) Transition rule.

§ 1.1446–7 Effective/Applicability date.

[T.D. 9200, 70 FR 28717, May 18, 2005, as amended by T.D. 9394, 73 FR 23074, Apr. 29, 2008]

§ 1.1446–1 Withholding tax on foreign partners' share of effectively connected taxable income.

(a) *In general.* If a domestic or foreign partnership has effectively connected taxable income (ECTI) as computed under § 1.1446–2 for any partnership tax year, and any portion of such taxable income is allocable under section 704 to a foreign partner, then the partnership must pay a withholding tax under section 1446 (1446 tax) at the time and in the manner prescribed in this section, and §§ 1.1446–2 through 1.1446–6.

(b) *Steps in determining 1446 tax obligation.* In general, a partnership determines its 1446 tax as follows. The partnership determines whether it has any foreign partners in accordance with paragraph (c) of this section. If the partnership does not have any foreign partners (including any person presumed to be foreign under paragraph (c) of this section and any domestic trust treated as foreign under § 1.1446–3(d)) during its taxable year, it generally will not have a 1446 tax obligation. If the partnership has one or more foreign partners, it then determines under § 1.1446–2 whether it has ECTI any portion of which is allocable under section 704 to one or more of the foreign partners. If the partnership has ECTI allocable under section 704 to one or more of its foreign partners, the partnership computes its 1446 tax, pays over 1446 tax, and reports the amount paid in accordance with the rules in § 1.1446–3. For special rules applicable to publicly traded partnerships, see § 1.1446–4. For special rules applicable to tiered partnership structures, see § 1.1446–5. For special rules that may apply in determining the amount of 1446 tax due with respect to a partner, see § 1.1446–6.

(c) *Determining whether a partnership has a foreign partner*—(1) *In general.* Except as otherwise provided in this section, § 1.1446–3, and § 1.1446–5, only a partnership that has at least one foreign partner during the partnership's taxable year can have a 1446 tax liability. Generally, the term foreign partner means any partner of the partnership that is not a U.S. person within the meaning of section 7701(a)(30). Thus, a partner of the partnership is generally a foreign partner if the partner is a nonresident alien, foreign partnership (see § 1.1446–5 for rules that allow a lower-tier partnership to look through an upper-tier foreign partnership to the partners of such partnership for purposes of computing its 1446 tax), foreign corporation (which includes a foreign government pursuant to section 892(a)(3)), foreign estate or trust (see paragraph (c)(2) of this section for rules that instruct a partnership to consider the grantor or other owner of a trust under subpart E of subchapter J as the partner for purposes of computing the partnership's 1446 tax), as those terms are defined under section 7701 and the regulations thereunder, or a foreign organization described in section 501(c), or other foreign person. A person also is a foreign partner if the person is presumed to be a foreign person under paragraph (c)(3) of this section. For purposes of this section, a partner that is treated as a U.S. person for all income tax purposes (by election or otherwise, see e.g., sections 953(d) and 1504(d)) will not be a foreign partner, provided the partner has provided the partnership a valid Form W–9, ''Request for Taxpayer Identification Number and Certification,'' or the partnership uses other means to determine that the partner is not a foreign partner (see paragraph (c)(3) of this section). A partner that is treated as a U.S. person only for certain specified purposes is considered a foreign partner for purposes of section 1446, and a partnership must pay 1446 tax on the portion of ECTI allocable to that partner. For example, a partnership must generally pay 1446 tax on ECTI allocable to a foreign corporate partner

that has made an election under section 897(i).

(2) *Submission of Forms W–8BEN, W–8IMY, W–8ECI, W–8EXP, and W–9*—(i) *In general.* Except as otherwise provided in this paragraph (c)(2) or paragraph (c)(3) of this section, a partnership must generally determine whether a partner is a foreign partner, and the partner's tax classification (e.g., corporate or non-corporate), by obtaining a withholding certificate from the partner that is a Form W–8BEN, ''Certificate of Foreign Status of Beneficial Owner for United States Tax Withholding,'' Form W–8IMY, ''Certificate of Foreign Intermediary, Flow-Through Entity, or Certain U.S. Branches for United States Tax Withholding,'' Form W–8ECI, ''Certificate of Foreign Person's Claim for Exemption from Withholding on Income Effectively Connected With the Conduct of a Trade or Business in the United States,'' Form W–8EXP, ''Certificate of Foreign Government or other Foreign Organization for United States Tax Withholding,'' or a Form W–9, as applicable, or an acceptable substitute form permitted under paragraph (c)(5) of this section. Generally, a foreign partner that is a nonresident alien, a foreign estate or trust (other than a grantor trust described in this paragraph (c)(2)), a foreign corporation, or a foreign government should provide a valid Form W–8BEN.

(ii) *Withholding certificate applicable to each type of partner.* A partner that submits a valid Form W–8 (e.g., Form W–8BEN) for purposes of section 1441 or 1442 will generally satisfy the documentation requirements of this section provided that the submission of such form is not inconsistent with the rules of this paragraph (c)(2) or paragraph (c)(3) of this section. The following rules shall apply for purposes of this section.

(A) *U.S. person.* A partner that is a U.S. person (other than a grantor trust described in this paragraph (c)(2)), including a domestic partnership and domestic simple or complex trust (including an estate), shall provide a valid Form W–9.

(B) *Nonresident alien.* A Form W–8 (e.g., Form W–8BEN) submitted by a nonresident alien for purposes of withholding under section 1441 will generally be accepted for purposes of section 1446. If no such form is submitted for purposes of section 1441, such nonresident alien shall submit Form W–8BEN for purposes of section 1446.

(C) *Foreign partnership.* A partner that is a foreign partnership generally shall provide a valid Form W–8IMY for purposes of section 1446. See §1.1446–5 (permitting a lower-tier partnership to look through an upper-tier foreign partnership in certain circumstances when computing 1446 tax).

(D) *Disregarded entities.* An entity that is disregarded as an entity separate from its owner under §301.7701–3 of this chapter (whether domestic or foreign) shall not submit a Form W–8 (e.g., Form W–8BEN) or Form W–9. Instead, the owner of such entity for Federal tax purposes shall submit appropriate documentation to comply with this section. See §§301.7701–1 through 301.7701–3 of this chapter for determining the U.S. Federal tax classification of a partner.

(E) *Domestic and foreign grantor trusts.* To the extent that a grantor or other person is treated as the owner of any portion of a trust under subpart E of subchapter J of the Internal Revenue Code, such trust shall provide documentation under this paragraph (c)(2) to identify the trust as a grantor trust and provide documentation on behalf of the grantor or other person treated as the owner of all or a portion of such trust as required by this paragraph (c)(2). If such trust is a foreign trust, the trust shall submit Form W–8IMY to the partnership identifying itself as a foreign grantor trust and shall provide such documentation (e.g., Forms W–8BEN, W–8IMY, W–8ECI, W–8EXP, or W–9) and information pertaining to its grantor or other owner to the partnership that permits the partnership to reliably associate (within the meaning of §1.1441–1(b)(2)(vii)) such portion of the trust's allocable share of partnership ECTI with the grantor or other person that is the owner of such portion of the trust. If such trust is a domestic trust, the trust shall furnish the partnership a statement under penalty of perjury that the trust is, in whole or in part, a domestic grantor trust and such statement shall identify that portion of the

trust that is treated as owned by a grantor or another person under subpart E of subchapter J of the Internal Revenue Code. The trust shall also provide such documentation and information (e.g., Forms W–8BEN, W–8IMY, W–8ECI, W–8EXP, or W–9) pertaining to its grantor or other owner(s) to the partnership that permits the partnership to reliably associate (within the meaning of §1.1441–1(b)(2)(vii)) such portion of the trust's allocable share of partnership ECTI with the grantor or other person that is the owner of such portion of the trust.

(F) *Nominees.* Where a nominee holds an interest in a partnership on behalf of another person, the beneficial owner of the partnership interest, not the nominee, shall submit a Form W–8 (e.g., Form W–8BEN) or Form W–9 to the partnership or nominee that is the withholding agent.

(G) *Foreign governments, foreign tax-exempt organizations and other foreign persons.* A Form W–8 (e.g., Form W–8EXP) submitted by a partner that is a foreign government, foreign tax-exempt organization, or other foreign person for purposes of withholding under §§1441 through 1443 will also operate to establish the foreign status of such partner under this section. However, except as set forth in §1.1446–3(c)(3) (regarding certain tax-exempt organizations described in section 501(c)), the submission of Form W–8EXP will have no effect on whether there is a 1446 tax due with respect to such partner's allocable share of partnership ECTI. For example, a partnership must still pay 1446 tax with respect to a foreign government partner's allocable share of ECTI because such partner is treated as a foreign corporation under section 892(a)(3). If no Form W–8 is submitted for purposes of withholding under sections 1441 through 1443, then such government, tax-exempt organization, or person must generally submit Form W–8BEN.

(H) *Foreign corporations, certain foreign trusts, and foreign estates.* Consistent with the rules of this paragraph (c)(2) and paragraph (c)(3) of this section, a foreign corporation, a foreign trust (other than a foreign grantor trust described in paragraph (c)(2)(ii)(E) of this section), or a foreign estate may generally submit any appropriate Form W–8 (e.g., Form W–8BEN) to the partnership to establish its foreign status for purposes of section 1446.

(iii) *Effect of Forms W–8BEN, W–8IMY, W–8ECI, W–8EXP, W–9, and statement*—(A) *Partnership reliance on withholding certificate.* In general, for purposes of this section, a partnership may rely on a valid Form W–8 (e.g., Form W–8BEN) or Form W–9, or statement described in this paragraph (c)(2) from a partner, beneficial owner, or grantor trust to determine whether that person, beneficial owner, or the owner of a grantor trust, is a non-foreign or foreign partner for purposes of computing 1446 tax, and if such person is a foreign partner, to determine whether or not such person is a corporation for U.S. tax purposes. The rules of paragraph (c)(3) of this section shall apply to a partnership that receives a Form W–8IMY from a foreign grantor trust or a statement described in this paragraph (c)(2) from a domestic grantor trust, but does not receive a Form W–8 (e.g., Form W–8BEN) or Form W–9 identifying such grantor or other person. Further, a partnership may not rely on a Form W–8 or Form W–9, or statement described in this paragraph (c)(2), and such form or statement is therefore not valid for any installment period or Form 8804 filing date during which the partnership has actual knowledge or has reason to know that any information on the withholding certificate or statement is incorrect or unreliable and, if based on such knowledge or reason to know, the partnership should pay 1446 tax in an amount greater than would be the case if it relied on the certificate or statement.

(B) *Reason to know.* A partnership has reason to know that information on a withholding certificate or statement is incorrect or unreliable if its knowledge of relevant facts or statements contained on the form or other documentation is such that a reasonably prudent person in the position of the withholding agent would question the claims made. See §§1.1441–1(e)(4)(viii) and 1.1441–7(b)(1) and (2).

(C) *Subsequent knowledge and impact on penalties.* If the partnership does not have actual knowledge or reason to

know that a Form W–8BEN, Form W–8IMY, Form W–8ECI, Form W–8EXP, Form W–9, or statement received from a partner, beneficial owner, or grantor trust contains incorrect or unreliable information, but it subsequently determines that the certificate or statement contains incorrect or unreliable information, and, based on such knowledge the partnership should pay 1446 tax in an amount greater than would be the case if it relied on the certificate or statement, then the partnership will not be subject to penalties for its failure to pay the 1446 tax in reliance on such certificate or statement for any installment payment date prior to the date that the determination is made. See §§1.1446–1(c)(4) and 1.1446–3 concerning penalties for failure to pay the withholding tax when a partnership knows or has reason to know that a withholding certificate or statement is incorrect or unreliable.

(iv) *Requirements for certificates to be valid*. Except as otherwise provided in this paragraph (c), for purposes of this section, the validity of a Form W–9 shall be determined under section 3406 and §31.3406(h)–3(e) of this chapter which establish when such form may be reasonably relied upon. A Form W–8BEN, Form W–8IMY, Form W–8ECI, or Form W–8EXP is only valid for purposes of this section if its validity period has not expired, the partner submitting the form has signed it under penalties of perjury, and it contains all the required information.

(A) *When period of validity expires*. For purposes of this section, a Form W–8BEN, Form W–8IMY, Form W–8ECI, or Form W–8EXP submitted by a partner shall be valid until the end of the period of validity determined for such form under §1.1441–1(e). With respect to a foreign partnership submitting Form W–8IMY, the period of validity of such form shall be determined under §1.1441–1(e) as if such foreign partnership submitted the form required of a nonwithholding foreign partnership. See §1.1441–1(e)(4)(ii).

(B) *Required information for Forms W–8BEN, W–8IMY, W–8ECI, and W–8EXP*. Forms W–8BEN, W–8IMY, W–8ECI, and W–8EXP submitted under this section must contain the partner's name, permanent address and Taxpayer Identification Number (TIN), the country under the laws of which the partner is formed, incorporated or governed (if the person is not an individual), the classification of the partner for U.S. Federal tax purposes (e.g., partnership, corporation), and any other information required to be submitted by the forms or instructions for such form, as applicable.

(v) *Partner must provide new withholding certificate when there is a change in circumstances*. The principles of §1.1441–1(e)(4)(ii)(D) shall apply when a change in circumstances has occurred (including situations where the status of a U.S. person changes) that requires a partner to provide a new withholding certificate.

(vi) *Partnership must retain withholding certificates*. A partnership or nominee who has responsibility for paying 1446 tax under this section or §1.1446–4 must retain each withholding certificate, statement, and other information received from its direct and indirect partners for as long as it may be relevant to the determination of the withholding agent's 1446 tax liability under section 1461 and the regulations thereunder.

(3) *Presumptions in the absence of valid Form W–8BEN, Form W–8IMY, Form W–8ECI, Form W–8EXP, Form W–9, or statement*. Except as otherwise provided in this paragraph (c)(3), a partnership that does not receive a valid Form W–8BEN, Form W–8IMY, Form W–8ECI, Form W–8EXP, Form W–9, or statement required by paragraph (c)(2) of this section from a partner, beneficial owner, or grantor trust, or a partnership that receives a withholding certificate or statement but has actual knowledge or reason to know that the information on the certificate or statement is incorrect or unreliable, must presume that the partner is a foreign person. Except as provided in §1.1446–3(a)(2) and §1.1446–5(c)(2), a partnership that knows that a partner is an individual shall treat the partner as a nonresident alien. Except as provided in §1.1446–3(a)(2) and §1.1446–5(c)(2), a partnership that knows that a partner is an entity shall treat the partner as a corporation if the entity is a corporation as defined in §301.7701–2(b)(8) of this chapter. See §1.1446–3(a)(2) which

prohibits a partnership in certain circumstances from considering preferential tax rates in computing its 1446 tax when the presumption and rules of this paragraph (c)(3) apply. In all other cases, the partnership shall treat the partner as either a nonresident alien or a foreign corporation, whichever classification results in a higher 1446 tax being due, and shall pay the 1446 tax in accordance with this presumption. Except as provided in §1.1446–5(c)(2), the presumption set forth in this paragraph (c)(3) that a partner is a foreign person shall not apply to the extent that the partnership relies on other means to ascertain the non-foreign status of a partner and the partnership is correct in its determination that such partner is a U.S. person. A partnership is in no event required to rely upon other means to determine the non-foreign status of a partner and may demand that a partner furnish an acceptable certificate under this section. If a certificate is not provided in such circumstances, the partnership may presume that the partner is a foreign partner, and for purposes of sections 1461 through 1463, will be considered to have been required to pay 1446 tax on such partner's allocable share of partnership ECTI.

(4) *Consequences when partnership knows or has reason to know that Form W–8BEN, Form W–8IMY, Form W–8ECI, Form W–8EXP, or Form W–9 is incorrect or unreliable and does not withhold.* If a partnership has actual knowledge or has reason to know that a Form W–8BEN, Form W–8IMY, Form W–8ECI, Form W–8EXP, Form W–9, or statement required by paragraph (c)(2) of this section submitted by a partner, beneficial owner, or grantor trust contains incorrect or unreliable information (either because the certificate or statement when given to the partnership contained incorrect information or because there has been a change in facts that makes information on the certificate or statement incorrect), and the partnership pays less than the full amount of 1446 tax due on ECTI allocable to that partner, the partnership shall be fully liable under section 1461 and §1.1461–3 (§1.1461–1 for publicly traded partnerships subject to §1.1446–4) and §1.1446–3, and for all applicable penalties and interest, for any failure to pay the 1446 tax for the period during which the partnership has such knowledge or reason to know that the certificate contained incorrect or unreliable information and for all subsequent installment periods. If a partner, beneficial owner, or grantor trust submits a new valid Form W–8BEN, Form W–8IMY, Form W–8ECI, Form W–8EXP, Form W–9, or statement, as applicable, the partnership may rely on that documentation when paying 1446 tax (or any installment of such tax) for any payment date that has not passed at the time such form is received.

(5) *Acceptable substitute form.* A partnership or withholding agent responsible for paying 1446 tax (or any installment of such tax) may substitute its own form for the official version of Form W–8 (e.g., Form W–8BEN) that is recognized under this section to ascertain the identity of its partners, provided such form is consistent with §1.1441–1(e)(4)(vi). All references under this section or §§1.1446–2 through 1.1446–6 to a Form W–8 (e.g., Form W–8BEN, Form W–8IMY, Form W–8ECI, Form W–8EXP) shall include the acceptable substitute form recognized under this paragraph (c)(5).

[T.D. 9200, 70 FR 28717, May 18, 2005, as amended by T.D. 9394, 73 FR 23074, Apr. 29, 2008]

§1.1446–2 Determining a partnership's effectively connected taxable income allocable to foreign partners under section 704.

(a) *In general.* A partnership's effectively connected taxable income (ECTI) is generally the partnership's taxable income as computed under section 703, with adjustments as provided in section 1446(c) and this section, and computed with consideration of only those partnership items which are effectively connected (or treated as effectively connected) with the conduct of a trade or business in the United States. For purposes of determining the section 1446 withholding tax (1446 tax) or any installment of such tax under §1.1446–3, partnership ECTI allocable under section 704 to foreign partners is the sum of the allocable shares of ECTI of each of the partnership's foreign

partners as determined under paragraph (b) of this section. See §1.1446–6 (special rules permitting the partnership to consider partner-level deductions and losses to reduce the partnership's 1446 tax). The calculation of partnership ECTI allocable to foreign partners as set forth in paragraph (b) of this section and the partnership's withholding tax obligation are partnership-level computations solely for purposes of determining the 1446 tax. Therefore, any deduction that is not taken into account in calculating a partner's allocable share of partnership ECTI (e.g., percentage depletion), but which is a deduction that under U.S. tax law the foreign partner is otherwise entitled to claim, can still be claimed by the foreign partner when computing its U.S. tax liability and filing its U.S. income tax return, subject to any restriction or limitation that otherwise may apply.

(b) *Computation*—(1) *In general.* A foreign partner's allocable share of partnership ECTI for the partnership's taxable year that is allocable under section 704 to a particular foreign partner is equal to that foreign partner's distributive share of partnership gross income and gain for the partnership's taxable year that is effectively connected and properly allocable to the partner under section 704 and the regulations thereunder, reduced by the foreign partner's distributive share of partnership deductions for the partnership taxable year that are connected with such income under section 873(a) or 882(c) and properly allocable to the partner under section 704 and the regulations thereunder, in each case, after application of the rules of this section. See §1.1446–6 (special rules permitting the partnership to consider partner-level deductions and losses to reduce the partnership's 1446 tax). For these purposes, a foreign partner's distributive share of effectively connected gross income and gain and the deductions connected with such income shall be computed by considering allocations that are respected under the rules of section 704 and §1.704–1(b)(1), including special allocations in the partnership agreement (as defined in §1.704–1(b)(2)(ii)(h)), and adjustments to the basis of partnership property described in section 743 pursuant to an election by the partnership under section 754 (see §1.743–1(j)). The character of effectively connected partnership items (capital versus ordinary) shall be separately considered only to the extent set forth in paragraph (b)(3)(v) of this section and, when applicable, sections 1.1446–3(a)(2)(consideration of preferential rates when computing 1446 tax) and section 1.1446–6 (special rules permitting the partnership to consider partner-level deductions and losses to reduce the partnership's 1446 tax).

(2) *Income and gain rules.* For purposes of computing a foreign partner's allocable share of partnership ECTI under this paragraph (b), the following rules shall apply with respect to partnership income and gain.

(i) *Application of the principles of section 864.* The determination of whether a partnership's items of gross income are effectively connected shall be made by applying the principles of section 864 and the regulations thereunder.

(ii) *Income treated as effectively connected.* A partnership's items of gross income that are effectively connected include any income that is treated as effectively connected income, including partnership income subject to a partner's election under section 871(d) or section 882(d), any partnership income treated as effectively connected with the conduct of a U.S. trade or business pursuant to section 897, and any other items of partnership income treated as effectively connected under another provision of the Internal Revenue Code, without regard to whether those amounts are taxable to the partner. A partner that makes the election under section 871(d) or section 882(d) shall furnish to the partnership a statement that indicates that such election has been made. See §1.871–10(d)(3). If a partnership receives a valid Form W–8ECI from a partner, the partner is deemed, for purposes of section 1446, to have effectively connected income subject to withholding under section 1446 to the extent of the items identified on the form.

(iii) *Exempt income.* A foreign partner's allocable share of partnership ECTI does not include income or gain exempt from U.S. tax by reason of a provision of the Internal Revenue Code.

A foreign partner's allocable share of partnership ECTI also does not include income or gain exempt from U.S. tax by operation of any U.S. income tax treaty or reciprocal agreement. In the case of income excluded by reason of a treaty provision, such income must be derived by a resident of an applicable treaty jurisdiction, the resident must be the beneficial owner of the item, and all other requirements for benefits under the treaty must be satisfied. The partnership must have received from the partner a valid withholding certificate, that is, Form W–8BEN (see §1.1446–1(c)(2)(iii) regarding when a Form W–8BEN is valid for purposes of this section), containing the information necessary to support the claim for treaty benefits required in the forms and instructions. In addition, for purposes of this section, the withholding certificate must contain the beneficial owner's taxpayer identification number.

(3) *Deductions and losses.* For purposes of computing a foreign partner's allocable share of partnership ECTI under this paragraph (b), the following rules shall apply with respect to deductions and losses.

(i) *Oil and gas interests.* The deduction for depletion with respect to oil and gas wells shall be allowed, but the amount of such deduction shall be determined without regard to sections 613 and 613A.

(ii) *Charitable contributions.* The deduction for charitable contributions provided in section 170 shall not be allowed.

(iii) *Net operating losses and other suspended or carried losses.* Except as provided in §1.1446–6, the net operating loss deduction of any foreign partner provided in section 172 shall not be taken into account. Further, except as provided in §1.1446–6, the partnership shall not take into account any suspended losses (e.g., losses in excess of a partner's basis in the partnership, see section 704(d)) or any capital loss carrybacks or carryovers available to a foreign partner.

(iv) *Interest deductions.* The rules of this paragraph (b)(3)(iv) shall apply for purposes of determining the amount of interest expense that is allocable to income which is (or is treated as) effectively connected with the conduct of a trade or business for purposes of calculating a foreign partner's allocable share of partnership ECTI. In the case of a non-corporate foreign partner, the rules of §1.861–9T(e)(7) shall apply. In the case of a corporate foreign partner, the rules of §1.882–5 shall apply by treating the partnership as a foreign corporation and using the partner's pro-rata share of the partnership's assets and liabilities for these purposes. For these purposes, the rules governing elections under §1.882–5(a)(7) shall be made at the partnership level.

(v) *Limitation on capital losses.* Losses from the sale or exchange of capital assets allocable under section 704 to a partner shall be allowed only to the extent of gains from the sale or exchange of capital assets allocable under section 704 to such partner.

(vi) *Other deductions.* No deduction shall be allowed for personal exemptions provided in section 151 or the additional itemized deductions for individuals provided in part VII of subchapter B of the Internal Revenue Code (section 211 and following).

(vii) *Limitations on deductions.* Except as provided in §1.1446–6 and this paragraph (b)(3), any limitations on losses or deductions that apply at the partner level when determining ECTI allocable to a foreign partner shall not be taken into account.

(4) *Other rules*—(i) *Exclusion of items allocated to U.S. partners.* Except as provided in §1.1446–5(e), in computing partnership ECTI, the partnership shall not take into account any item of income, gain, loss, or deduction to the extent allocable to any partner that is not a foreign partner, as that term is defined in §1.1446–1(c).

(ii) *Partnership credits.* See §1.1446–3(a) providing that the 1446 tax is computed without regard to a partner's distributive share of the partnership's tax credits.

(5) *Examples.* The following examples illustrate the application of this section. In considering the examples, disregard the potential application of §1.1446–3(b)(2)(v)(F) (relating to the de minimis exception to paying 1446 tax). The examples are as follows:

Example 1. Limitation on capital losses. PRS partnership has two equal partners, A and B.

A is a nonresident alien and B is a U.S. citizen. A provides PRS with a valid Form W–8BEN, and B provides PRS with a valid Form W–9. PRS has the following annualized tax items for the relevant installment period, all of which are effectively connected with its U.S. trade or business and are allocated equally between A and B: $100 of long-term capital gain, $400 of long-term capital loss, $300 of ordinary income, and $100 of ordinary deductions. Assume that these allocations are respected under section 704(b) and the regulations thereunder. Accordingly, A's allocable share of PRS's effectively connected items includes $50 of long-term capital gain, $200 of long-term capital loss, $150 of ordinary income, and $50 of ordinary deductions. In determining A's allocable share of partnership ECTI, the amount of the long-term capital loss that may be taken into account pursuant to paragraph (b)(3)(v) of this section is limited to A's allocable share of gain from the sale or exchange of capital assets. Accordingly, A's share of partnership ECTI allocable under section 704 pursuant to § 1.1446–2 is $100 ($150 of ordinary income less $50 of ordinary deductions, plus $50 of capital gain less $50 of capital loss).

Example 2. Limitation on capital losses—special allocations. PRS partnership has two equal partners, A and B. A and B are both nonresident aliens. A and B each provide PRS with a valid Form W–8BEN. PRS has the following annualized tax items for the relevant installment period, all of which are effectively connected with its U.S. trade or business: $200 of long-term capital gain, $200 of long-term capital loss, and $400 of ordinary income. A and B have equal shares in the ordinary income, however, pursuant to the partnership agreement, capital gains and losses are subject to special allocations. The long-term capital gain is allocable to A, and the long-term capital loss is allocable to B. Assume that these allocations are respected under section 704(b) and the regulations thereunder. Pursuant to paragraph (b)(3)(v) of this section, A's allocable share of partnership ECTI under § 1.1446–2 is $400 (consisting of $200 of ordinary income and $200 of long-term capital gain), and B's allocable share of partnership ECTI is $200 (consisting of $200 of ordinary income).

Example 3. Withholding tax obligation where partner has net operating losses. PRS partnership has two equal partners, FC, a foreign corporation, and DC, a domestic corporation. FC and DC provide a valid Form W–8BEN and Form W–9, respectively, to PRS. Both FC and PRS are on a calendar taxable year. PRS is engaged in the conduct of a trade or business in the United States and for its first installment period during its taxable year has $100 of annualized ECTI that is allocable to FC. As of the beginning of the taxable year, FC had an unused effectively connected net operating loss carryover in the amount of $300. FC's net operating loss carryover is not taken into account in determining FC's allocable share of partnership ECTI under § 1.1446–2 and, absent the application of § 1.1446–6 (permitting a foreign partner to certify deductions and losses reasonably expected to be available to reduce the partner's U.S. income tax liability on the effectively connected income or gain allocable from the partnership), is not considered in computing the 1446 tax installment payment due on behalf of FC. Accordingly, PRS must pay 1446 tax with respect to the $100 of ECTI allocable to FC.

[T.D. 9200, 70 FR 28717, May 18, 2005, as amended by T.D. 9394, 73 FR 23074, Apr. 29, 2008]

§ 1.1446–3 Time and manner of calculating and paying over the 1446 tax.

(a) *In general*—(1) *Calculating 1446 tax.* This section provides rules for calculating, reporting, and paying over the section 1446 withholding tax (1446 tax). A partnership's 1446 tax equals the amount determined under this section and shall be paid in installments during the partnership's taxable year (see paragraph (d)(1) of this section for installment payment due dates), with any remaining tax due paid with the partnership's annual return required to be filed pursuant to paragraph (d) of this section. For these purposes, a partnership shall not take into account either a partner's liability for any other tax imposed under any other provision of the Internal Revenue Code (e.g., section 55 or 884) or a partner's distributive share of the partnership's tax credits when determining the amount of the partnership's 1446 tax.

(2) *Applicable percentage*—(i) *In general.* Except as provided in this paragraph (a)(2), in the case of a foreign partner that is a corporation for U.S. tax purposes, the applicable percentage is the highest rate of tax specified in section 11(b)(1) for such taxable year. Except as provided in this paragraph (a)(2) and § 1.1446–5, in the case of a foreign partner that is not a corporation for U.S. tax purposes (e.g., a partnership, individual, trust or estate), the applicable percentage is the highest rate of tax specified in section 1.

(ii) *Special types of income or gain.* Except as otherwise provided, a partnership is permitted to consider as the applicable percentage under this paragraph (a)(2) the highest rate of tax applicable to a particular type of income or gain allocable to a partner (e.g., long-term capital gain allocable to a non-corporate partner, unrecaptured section 1250 gain, collectibles gain under section 1(h)), to the extent of a partner's allocable share of such income or gain. Consideration of the highest rate of tax applicable to a particular type of income or gain under the previous sentence shall be made without regard to the amount of such partner's income. A partnership is not permitted to consider the highest rate of tax applicable to a particular type of income or gain under this paragraph (a)(2)(ii) if the application of the preferential rate depends upon the corporate or non-corporate status of the person reporting the income or gain and, either no documentation has been provided to the partnership under §1.1446–1 to establish the corporate or non-corporate status of the partner required to pay tax on the income or gain, or the partnership is otherwise required to compute and pay 1446 tax on such portion of the income or gain using the highest applicable percentage under section 1446(b). See e.g., §§1.1446–1(c)(3) (presumption of foreign status in the absence of documentation) and 1.1446–5(c)(2) (requirement to pay 1446 tax at higher of rates in section 1446(b) where a lower-tier partnership cannot reliably associate income with a partner of the upper-tier partnership).

(b) *Installment payments*—(1) *In general.* Except as provided in §1.1446–4 for certain publicly traded partnerships, a partnership must pay its 1446 tax by making installment payments of the 1446 tax based on the amount of partnership effectively connected taxable income (ECTI) allocable under section 704 to its foreign partners, without regard to whether the partnership makes any distributions to its partners during the partnership's taxable year. The amount of the installment payments is determined in accordance with this paragraph (b), and the tax must be paid at the times set forth in paragraph (d) of this section. Subject to paragraphs (b)(2)(v) and (b)(3)(ii) of this section, in computing its first installment of 1446 tax for a taxable year, a partnership must decide whether it will pay its 1446 tax for the entire taxable year by using the safe harbor set forth in paragraph (b)(3)(i) of this section, or by using one of several annualization methods available under paragraph (b)(2)(ii) of this section for computing partnership ECTI allocable to foreign partners. In the case of a partnership's underpayment of an installment of 1446 tax, the partnership shall be subject to an addition to the tax equal to the amount determined under section 6655, as modified by this section, as if such partnership were a corporation, as well as any other applicable interest and penalties. See §1.1446–3(f). Section 6425 (permitting an adjustment for an overpayment of estimated tax by a corporation) shall not apply to a partnership's payment of its 1446 tax.

(2) *Calculation*—(i) *Application of the principles of section 6655*—(A) *In general.* Installment payments of 1446 tax required during the partnership's taxable year are based upon partnership ECTI for the portion of the partnership taxable year to which the payments relate, and, except as set forth in this paragraph (b)(2) or paragraph (b)(3) of this section, shall be calculated using the principles of section 6655. The principles of section 6655, except as otherwise provided in §1.6655–2, are applied to annualize the partnership's items of effectively connected income, gain, loss, and deduction to determine each foreign partner's allocable share of partnership ECTI. Each foreign partner's allocable share of partnership ECTI is then multiplied by the relevant applicable percentage for the type of income allocable to the foreign partner under paragraph (a)(2) of this section. The respective 1446 tax amounts are then added for each foreign partner to yield an annualized 1446 tax with respect to such partner. The installment of 1446 tax due with respect to a foreign partner equals the excess of the section 6655(e)(2)(B)(ii) percentage of the annualized 1446 tax for that partner (or, if applicable, the adjusted seasonal amount) for the relevant installment period, over the aggregate amount of

1446 tax installment payments previously paid with respect to that partner during the partnership's taxable year. The partnership's total 1446 tax installment payment equals the sum of the installment payments due for such period on behalf of all the partnership's foreign partners.

(ii) *Annualization methods.* A partnership that decides to annualize its income for the taxable year shall use one of the annualization methods set forth in section 6655(e) and the regulations thereunder, and as described in the forms and instructions for Form 8804, ''Annual Return for Partnership Withholding Tax (Section 1446),'' Form 8805, ''Foreign Partner's Information Statement of Section 1446 Withholding Tax,'' and Form 8813, ''Partnership Withholding Tax Payment Voucher.''

(iii) *Partner's estimated tax payments.* In computing its installment payments of 1446 tax, a partnership may not take into account a partner's estimated tax payments.

(iv) *Partner whose interest terminates during the partnership's taxable year.* If a partner's interest in the partnership terminates prior to the end of the partnership's taxable year, the partnership shall take into account the income that is allocable to the partner for the portion of the partnership taxable year that the person was a partner.

(v) *Exceptions and modifications to the application of the principles under section 6655.* To the extent not otherwise modified in §§1.1446–1 through 1.1446–7 or inconsistent with those rules, the principles of section 6655 apply to the calculation of the installment payments of 1446 tax made by a partnership as set forth in this paragraph (b)(2)(v).

(A) *Inapplicability of special rules for large corporations.* The principles of section 6655(d)(2), concerning large corporations (as defined in section 6655(g)(2)), shall not apply.

(B) *Inapplicability of special rules regarding early refunds.* The principles of section 6655(h), applicable to amounts excessively credited or refunded under section 6425, shall not apply. See paragraph (b)(1) of this section providing that section 6425 shall not apply for purposes of the 1446 tax. This paragraph (b)(2)(v)(B) shall apply to 1446 tax paid by a partnership or nominee, as well as to amounts that a partner is deemed to have paid for estimated tax purposes by reason of the partnership's or nominee's 1446 tax payments under §1.1446–3(d)(1)(i).

(C) *Period of underpayment.* The period of the underpayment set forth in section 6655(b)(2) shall end on the earlier of the 15th day of the 4th month following the close of the partnership's taxable year (or, in the case of a partnership described in §1.6081–5(a)(1) of this chapter, the 15th day of the 6th month following the close of the partnership's taxable year), or with respect to any portion of the underpayment, the date on which such portion is paid.

(D) *Other taxes.* Section 6655 shall be applied without regard to any references to alternative minimum taxable income and modified alternative minimum taxable income.

(E) *1446 tax treated as tax under section 11.* The principles of section 6655(g)(1) shall be applied to treat the 1446 tax as a tax imposed by section 11, and any partnership required to pay such tax shall be treated as a corporation.

(F) *Application of section 6655(f).* A partnership subject to section 1446 shall apply section 6655(f) after aggregating the 1446 tax due (or any installment of such tax) for all its foreign partners. See §1.1446–6(c)(1)(ii) for an exception to this rule when a nonresident alien partner certifies to the partnership that the partnership investment is the nonresident alien partner's only activity giving rise to effectively connected items.

(G) *Application of section 6655(i).* If a partnership has a taxable year of less than 12 months, the partnership is required to pay 1446 tax (including installments of such tax) in accordance with this section §1.1446–3, if the partnership has ECTI allocable under section 704 to foreign partners. In such a case, the partnership shall adjust its installment payments of 1446 tax in a reasonable manner (e.g., the annualized amounts of ECTI estimated to be allocable to a foreign partner, and the section 6655(e)(2)(B)(ii) percentage to be applied to each installment) to account for the short-taxable year. However, if

the partnership's taxable year is a period of less than 4 months, the partnership shall not be required to make installment payments of 1446 tax, but will only be required to file Forms 8804 and 8805 in accordance with this section §1.1446–3, and report and pay the appropriate 1446 tax for the short-taxable year.

(H) *Current year tax safe harbor*. The safe harbor set forth in section 6655(d)(1)(B)(i) shall apply to a partnership subject to section 1446.

(I) *Prior year tax safe harbor*. The safe harbor set forth in section 6655(d)(1)(B)(ii) shall not apply and instead the safe harbor set forth in paragraph (b)(3) of this section applies.

(3) *1446 tax safe harbor*—(i) *In general*. The addition to tax under section 6655 shall not apply to a partnership with respect to a current installment of 1446 tax if—

(A) The average of the amount of the current installment and prior installments during the taxable year is at least 25 percent of the total 1446 tax (without regard to §1.1446–6) for the prior taxable year;

(B) The prior taxable year consisted of twelve months;

(C) The partnership timely files (including extensions) an information return under section 6031 for the prior year; and

(D) The amount of ECTI for the prior taxable year is not less than 50 percent of the ECTI shown on the annual return of section 1446 withholding tax that is (or will be) timely filed for the current year.

(ii) *Permission to change to standard annualization method*. Except as otherwise provided in this paragraph (b)(3)(ii), if a partnership decides to pay its 1446 tax for the first installment period based upon the safe harbor method set forth in paragraph (b)(3)(i), the partnership must use the safe harbor method for each installment payment made during the partnership's taxable year. Notwithstanding the previous sentence, if a partnership paying over 1446 tax during the taxable year pursuant to this paragraph (b)(3) determines during an installment period (based upon the standard option annualization method set forth in section 6655(e) and the regulations thereunder, as modified by the forms and instructions to Forms 8804, 8805, and 8813) that it will not qualify for the safe harbor in this paragraph (b)(3) because the prior year's ECTI will not meet the 50-percent threshold in paragraph (b)(3)(i)(D) of this section, then the partnership is permitted, without being subject to the addition to the tax under section 6655 (as applied through this section), to pay over its 1446 tax for the period in which such determination is made, and all subsequent installment periods during the taxable year, using the standard option annualization method. A change pursuant to this paragraph shall be disclosed in a statement attached to the Form 8804 the partnership files for the taxable year and shall include information to allow the IRS to determine whether the change was appropriate.

(c) *Coordination with other withholding rules*—(1) *Fixed or determinable, annual or periodical income*. Fixed or determinable, annual or periodical income subject to tax under section 871(a) or section 881 is not subject to withholding under section 1446, and such income is subject to the withholding requirements of sections 1441 and 1442 and the regulations thereunder.

(2) *Real property gains*—(i) *Domestic partnerships*. Except as otherwise provided in this paragraph (c)(2), a domestic partnership that is otherwise subject to the withholding requirements of sections 1445 and 1446 will be subject to the payment and reporting requirements of section 1446 only and not section 1445(e)(1) and the regulations thereunder, with respect to partnership gain from the disposition of a U.S. real property interest (as defined in section 897(c)). A partnership that has complied with the requirements of section 1446 will be deemed to satisfy the withholding requirements of section 1445 and the regulations thereunder. However, a domestic partnership that would otherwise be exempt from section 1445 withholding by operation of a nonrecognition provision must continue to comply with the requirements of §1.1445–5(b)(2). In the event that amounts are withheld under section 1445(e) at the time of the disposition of a U.S. real property interest, such amounts may be credited against the

partnership's 1446 tax. A partnership that fails to comply fully with the requirements of section 1446 pursuant to this paragraph (c)(2) shall be liable for any unpaid 1446 tax and subject to any applicable addition to the tax, interest, and penalties under section 1446. See §1.1446–4(f)(4) for rules coordinating the withholding liability of publicly traded partnerships under sections 1445 and 1446.

(ii) *Foreign partnerships.* A foreign partnership that is subject to withholding under section 1445(a) during its taxable year may credit the amount withheld under section 1445(a) against its section 1446 tax liability for that taxable year only to the extent such amount is allocable to foreign partners.

(3) *Coordination with section 1443.* A partnership that has ECTI allocable under section 704 to a foreign organization described in section 501(c) shall be required to pay 1446 tax on such ECTI only to the extent such ECTI is includible under section 512 and section 513 in computing the organization's unrelated business taxable income. The certificate procedure available under §1.1441–9(b)(1) by which a partner may set forth the amounts it believes will and will not be includible in its computation of unrelated business taxable income under section 512 and section 513 shall also apply to a partner in a partnership subject to section 1446. Such certificate shall be made by a partner in the same manner as under §1.1441–9(b)(2). A partnership that determines that the partner's certificate as to certain partnership items is unreliable or lacking must presume, consistent with §1.1441–9(b)(3) (regarding amounts includible under section 512 in computing the organization's unrelated business taxable income), that such partnership items would be includible in computing the partner's UBTI.

(d) *Reporting and crediting the 1446 tax*—(1) *Reporting 1446 tax.* This paragraph (d) sets forth the rules for reporting and crediting the 1446 tax paid by a partnership. To the extent that 1446 tax is paid on ECTI allocable to a domestic trust (including a grantor or other person treated as an owner of a portion of such trust) or a grantor or other person treated as the owner of a portion of a foreign trust, the rules of this paragraph (d) applicable to a foreign trust or its beneficiaries shall be applied to such domestic or foreign trust and its beneficiaries or owners, as applicable, so that appropriate credit for the 1446 tax may be claimed by the trust, beneficiary, grantor, or other person.

(i) *Reporting of installment tax payments and notification to partners of installment tax payments.* Each partnership required to make an installment payment of 1446 tax must file Form 8813, ''Partnership Withholding Tax Payment Voucher (Section 1446),'' in accordance with the instructions to that form. Form 8813 is generally used to transmit an installment payment of 1446 tax to the IRS with respect to partnership ECTI estimated to be allocated to foreign partners. However, see §1.1446–6(d)(3) (relating to circumstances where a partnership must file Form 8813 when no payment is required under section 1446). Except as provided in this section, a partnership must notify each foreign partner of the 1446 tax paid on the partner's behalf when the partnership makes an installment payment of 1446 tax. The notice required to be given to a foreign partner under the previous sentence must be provided within 10 days of the installment payment due date, or, if paid later, the date such installment payment is made. A foreign partner generally may credit an installment of 1446 tax paid by the partnership on the partner's behalf against the partner's estimated tax that the partner must pay during the partner's own taxable year. See §1.1446–5(b) (relating to tiered partnership structures). However, a foreign partner may not obtain an early refund of such amounts under the estimated tax rules. See §1.1446–3(b)(2)(v)(B). See paragraph (d)(2) of this section for the amount of 1446 tax a partner may credit against its U.S. income tax liability. No particular form is required for a partnership's notification to a foreign partner, but each notification must include the partnership's name, the partnership's Taxpayer Identification Number (TIN), the partnership's address, the partner's name, the partner's TIN, the partner's address, the annualized ECTI estimated

to be allocated to the foreign partner (or prior year's safe harbor amount, if applicable), and the amount of tax paid on behalf of the partner for both the current and any prior installment periods during the partnership's taxable year. Notwithstanding any other provision of this paragraph (d), a withholding agent is not required to notify a partner of an installment of 1446 tax paid on the partner's behalf, unless requested by the partner, if—

(A) The partnership's agent responsible for providing notice pursuant to this paragraph is the same person that acts as an agent of the foreign partner for purposes of filing the partner's U.S. Federal income tax return for the partner's taxable year that includes the installment payment date; or

(B) The partnership has at least 500 foreign partners and the total 1446 tax that the partnership determines will be required to be paid for the partnership taxable year on behalf of such partner (based on paragraph (b)(2)(ii) or (3) of this section) with respect to the partner's allocable share of ECTI is less than $1,000.

(ii) *Payment due dates.* The 1446 tax is calculated based on partnership ECTI allocable under section 704 to foreign partners during the partnership's taxable year, as determined under section 706. Installment payments of the 1446 tax generally must be made during the partnership's taxable year in which such income is derived. A partnership must pay to the Internal Revenue Service a portion of its estimated annual 1446 tax in installments on or before the 15th day of the fourth, sixth, ninth, and twelfth months of the partnership's taxable year as provided in section 6655. Any additional amount determined to be due is to be paid with the filing of the annual return of tax required under paragraph (d)(1)(iii) of this section and clearly designated as for the prior taxable year. Form 8813 should not be submitted for a payment made under the preceding sentence.

(iii) *Annual return and notification to partners.* Every partnership (except a publicly traded partnership subject to §1.1446–4) that has effectively connected gross income for the partnership's taxable year allocable under section 704 to one or more of its foreign partners (or is treated as having paid 1446 tax under §1.1446–5(b)), must file Form 8804, ''Annual Return for Partnership Withholding Tax (Section 1446).'' Additionally, every partnership that is required to file Form 8804 also must file Form 8805, ''Foreign Partner's Information Statement of Section 1446 Withholding Tax,'' for each of its foreign partners on whose behalf it paid 1446 tax, and furnish Form 8804 and the Forms 8805 to the Internal Revenue Service and the respective Form 8805 to each of its partners. Notwithstanding the previous sentence, a partnership that considers a foreign partner's certificate under §1.1446–6 when computing its 1446 tax on Form 8804 is required to furnish such partner and the Internal Revenue Service a Form 8805, even if the form submitted to the partner shows no payment of 1446 tax on behalf of the partner. Forms 8804 and 8805 are separate from Form 1065, ''U.S. Return of Partnership Income,'' and the attachments thereto, and are not to be filed as part of the partnership's Form 1065. A partnership must generally file Forms 8804 and 8805 on or before the due date for filing the partnership's Form 1065. See §1.6031(a)–1(c) for rules concerning the due date of a partnership's Form 1065. However, with respect to partnerships described in §1.6081–5(a)(1), Forms 8804 and 8805 are not due until the 15th day of the sixth month following the close of the partnership's taxable year.

(iv) *Information provided to beneficiaries of foreign trusts and estates.* A foreign trust or estate that is a partner in a partnership subject to withholding under section 1446 shall be provided Form 8805 by the partnership. The foreign trust or estate must provide to each of its beneficiaries a copy of the Form 8805 furnished by the partnership. In addition, the foreign trust or estate must provide a statement for each of its beneficiaries to inform each beneficiary of the amount of the credit that may be claimed under section 33 (as determined under this section) for the 1446 tax paid by the partnership. Until an official Internal Revenue Service form is available, the statement from a foreign trust or estate that is described in this paragraph

(d)(1)(iv) shall contain the following information—

(A) Name, address, and TIN of the foreign trust or estate;

(B) Name, address, and TIN of the partnership;

(C) The amount of the partnership's ECTI allocated to the foreign trust or estate for the partnership taxable year (as shown on the Form 8805 provided to the trust or estate);

(D) The amount of 1446 tax paid by the partnership on behalf of the foreign trust or estate (as shown on Form 8805 to the trust or estate);

(E) Name, address, and TIN of the beneficiary of the foreign trust or estate;

(F) The amount of the partnership's ECTI allocated to the trust or estate for purposes of section 1446 that is to be included in the beneficiary's gross income; and

(G) The amount of 1446 tax paid by the partnership on behalf of the foreign trust or estate that the beneficiary is entitled to claim on its return as a credit under section 33.

(v) *Attachments required of foreign trusts and estates.* The statement furnished to each foreign beneficiary under this paragraph (d)(1) must also be attached to the foreign trust or estate's U.S. Federal income tax return filed for the taxable year that includes the installment periods to which the statement relates.

(vi) *Attachments required of beneficiaries of foreign trusts and estates.* The beneficiary of the foreign trust or estate must attach the statement provided by the trust or estate pursuant to paragraph (d)(1)(iv) of this section, along with a copy of the Form 8805 furnished by the partnership to such trust or estate, to its U.S. income tax return for the year in which it claims a credit for the 1446 tax. See §1.1446–3(d)(2)(ii) for additional rules regarding a partner or beneficial owner claiming a credit for the 1446 tax.

(vii) *Information provided to beneficiaries of foreign trusts and estates that are partners in certain publicly traded partnerships.* A statement similar to the statement required by paragraph (d)(1)(iv) of this section shall be provided by trusts or estates that hold interests in publicly traded partnerships subject to §1.1446–4.

(2) *Crediting 1446 tax against a partner's U.S. tax liability*—(i) *In general.* A partnership's payment of 1446 tax on the portion of ECTI allocable to a foreign partner generally relates to the partner's U.S. income tax liability for the partner's taxable year in which the partner is subject to U.S. tax on that income. Subject to paragraphs (d)(2)(ii) and (iii) of this section, a partner may claim as a credit under section 33 the 1446 tax paid by the partnership with respect to ECTI allocable to that partner. The partner may not claim an early refund of these amounts under the estimated tax rules. See paragraph (d)(1)(i) of this section regarding a partner's ability to credit an installment of 1446 tax paid on the partner's behalf against the partner's estimated tax payments due for the taxable year. See also §1.1446–5(b) (relating to tiered partnership structures).

(ii) *Substantiation for purposes of claiming the credit under section 33.* A partner may credit the amount paid under section 1446 with respect to such partner against its U.S. income tax liability only if it attaches proof of payment to its U.S. income tax return for the partner's taxable year in which the items comprising such partner's allocable share of partnership ECTI are included in the partner's income. Except as provided in the next sentence, proof of payment consists of a copy of the Form 8805 the partnership provides to the partner (or in the case of a beneficiary of a foreign trust or estate, the statement required under paragraph (d)(1)(iv) or (vii) of this section to be provided by such trust or estate and a copy of the related Form 8805 furnished to such trust or estate), but only if the name and TIN on the Form 8805 (or the statement provided by a foreign trust or estate) match the name and TIN on the partner's U.S. tax return, and such form (or statement) identifies the partner (or beneficiary) as the person entitled to the credit under section 33. In the case of a partner of a publicly traded partnership that is subject to withholding on distributions under §1.1446–4, proof of payment consists of a copy of the Form 1042–S, ''Foreign Person's

U.S. Source Income Subject to Withholding,'' provided to the partner by the partnership.

(iii) *Special rules for apportioning the tax credit under section 33*—(A) *Foreign trusts and estates.* Section 1446 tax paid on the portion of ECTI allocable under section 704 to a foreign trust or estate that the foreign trust or estate may claim as a credit under section 33 shall bear the same ratio to the total 1446 tax paid on behalf of the trust or estate as the total ECTI allocable to such trust or estate and not distributed (or treated as distributed) to the beneficiaries of such trust or estate, and, accordingly not deducted under section 651 or section 661 in calculating the trust or estate's taxable income, bears to the total ECTI allocable to such trust or estate. The 1446 tax that a foreign trust or estate is not entitled to claim as a credit under this paragraph (d)(2) may be claimed as a credit by the beneficiary of such trust or estate that includes the partnership ECTI allocated to the trust or estate in gross income under section 652 or section 662 (whether distributed or deemed to be distributed and with the same character as effectively connected income as in the hands of the trust or estate). In the case of a foreign trust or estate with multiple beneficiaries, each beneficiary may claim a portion of the 1446 tax that may be claimed by all beneficiaries under the previous sentence as a credit in the same proportion as the amount of ECTI included in such beneficiary's gross income bears to the total amount of ECTI included by all beneficiaries. The trust or estate must provide each beneficiary with a copy of the Form 8805 provided to it by the partnership and prepare the statement required by paragraph (d)(1)(iv) of this section.

(B) *Use of domestic trusts to circumvent section 1446.* This paragraph (d)(2)(iii)(B) shall apply if a partnership knows or has reason to know that a foreign person holds its interest in the partnership through a domestic trust, and such domestic trust was formed or availed of with a principal purpose of avoiding the 1446 tax. The use of a domestic trust may have a principal purpose of avoiding the 1446 tax even though the tax avoidance purpose is outweighed by other purposes when taken together. In such case, a partnership is required to pay 1446 tax under this paragraph as if the domestic trust was a foreign trust for purposes of section 1446 and the regulations thereunder. Accordingly, all applicable additions to the tax, interest, and penalties shall apply to the partnership for its failure to pay 1446 tax under this paragraph (d)(2)(iii)(B), commencing with the installment period during which the partnership knows or has reason to know that this paragraph (d)(2)(iii)(B) applies. A publicly traded partnership within the meaning of §1.1446–4 (or a nominee required to pay 1446 tax under §1.1446–4) will not be considered to know or have reason to know a domestic trust is being used to avoid the 1446 tax under this paragraph (d)(2)(iii)(B), provided the interest held in such entity by the domestic trust is publicly traded.

(iv) *Refunds to withholding agent.* A withholding agent (*i.e.*, the partnership) may obtain a refund of the 1446 tax paid (or deemed paid under §1.1446–5(b)) to the extent of the excess of the amount paid to the Internal Revenue Service by the partnership, over the partnership's section 1446 tax liability as determined by the sum of the total tax creditable to each partner indicated on all Forms 8805 for the taxable year. If a partnership issues Form 8805 to a partner, then the partnership may not claim a refund for any amount of tax shown on that form as paid on behalf of the partner. If a partnership incorrectly withholds upon a United States person under section 1446 of the Internal Revenue Code and issues a Form 8805 to that person, the partnership may not file for a refund of the amount incorrectly withheld. Instead, the United States person may file for a refund of that amount on its annual return. For rules concerning refunds to withholding agents who pay 1446 tax on distributions of effectively connected income or gain under §1.1446–4 (*i.e.*, publicly traded partnerships or nominees), see §1.1464–1.

(v) *1446 tax treated as cash distribution to partners.* Except as otherwise provided in this paragraph (d)(2)(v), a partnership's payment of 1446 tax on behalf of a foreign partner is treated under

section 1446(d) and this section as a deemed distribution of money to the partner on the earliest of the day on which the partnership paid the tax, the last day of the partnership's taxable year for which the amount was paid, or the last day on which the partner owned an interest in the partnership during the taxable year for which the tax was paid. However, a deemed distribution of money under section 1446(d) resulting from a partnership's installment payment of 1446 tax on behalf of a partner is treated as an advance or drawing of money under §1.731–1(a)(1)(ii) to the extent of the partner's distributive share of income for the partnership taxable year. The rule treating a deemed distribution as an advance or drawing of money under this paragraph (d)(2)(v) applies only for purposes of determining the tax results of the deemed distribution to the partner under sections 705, 731, and 733, and does not affect the date that the partnership is considered to have paid any installment of 1446 tax for purposes of section 6655 (as applied through this section) or the date a foreign partner is deemed to have paid estimated tax by reason of such installment payment. See paragraph (d)(1)(i) of this section (permitting a partner to credit 1446 tax paid on the partner's behalf against the partner's estimated tax obligation). An amount treated as an advance or drawing of money is taken into account at the end of the partnership taxable year or the last day during the partnership's taxable year on which the partner owned an interest in the partnership. Any 1446 tax paid after the close of the partnership's taxable year, including amounts paid with the filing of Form 8804, that are on account of partnership ECTI allocated to partners for the prior taxable year shall be treated under section 1446(d) and this section as a distribution from the partnership on the earlier of the last day of the partnership's prior taxable year for which the tax is paid, or the last day in such prior taxable year on which such foreign partner held an interest in the partnership.

(vi) *Examples.* The following examples illustrate the application of this section. In considering the examples, disregard the potential application of paragraph (b)(2)(v)(F) of this section (relating to the *de minimis* exception to paying 1446 tax). The examples are as follows:

Example 1. Simple trust that reports entire amount of ECTI. PRS is a partnership that has two partners, FT, a foreign trust, and A, a U.S. person. FT is a simple trust under section 651. FT and A each provide PRS with a valid Form W–8BEN and Form W–9, respectively. FT has one beneficiary, NRA, a nonresident alien. PRS and FT each maintain a calendar taxable year. PRS estimated for each installment period during the partnership's taxable year that FT would be allocated $100 of ECTI for the taxable year, and that all such ECTI would be ordinary in character. Assume that the allocation of the $100 would be respected under section 704(b) and the regulations thereunder. PRS pays installments of 1446 tax based upon its estimates and timely pays a total of $35 of 1446 tax over the course of the partnership's taxable year ($100 ECTI × .35). Assume that PRS' estimates of ECTI allocable to FT during the taxable year equal the actual amount of ECTI allocable to FT for the taxable year. Assume also that FT's only income for the taxable year is the $100 of income from PRS, and that, pursuant to the terms of the trust's governing instrument and local law, the $100 of ECTI is not included in FT's fiduciary accounting income and the deemed distribution of the $35 withholding tax paid under paragraph (d)(2)(v) of this section is not included in FT's fiduciary accounting income. Accordingly, the $100 of ECTI is not income required to be distributed by FT, and FT may not claim a deduction under section 651 for this amount. FT must report the $100 of ECTI in its gross income and may claim a credit under section 33 as determined under paragraph (d)(2)(iii) of this section of $35 for the 1446 tax paid by PRS. NRA is not required to include any of the ECTI in gross income and accordingly may not claim a credit for any amount of the $35 of 1446 tax PRS paid.

Example 2. Simple trust that distributes a portion of ECTI to the beneficiary. Assume the same facts as in *Example 1*, except that PRS distributes $60 to FT, which FT includes in its fiduciary accounting income under local law. FT will report the $100 of ECTI in its gross income and may claim a deduction for the $60 required to be distributed under section 651(a) to NRA. Pursuant to paragraph (d)(2)(iii) of this section, FT may claim a $14 credit under section 33 for the 1446 tax PRS paid ($40/$100 multiplied by $35). NRA is required to include the $60 of the ECTI in gross income under section 652 (as ECTI) and may claim a $21 credit under section 33 for the 1446 tax PRS paid ($35 less $14 or $60/$100 multiplied by $35).

Example 3. Complex trust that distributes entire ECTI to the beneficiary. Assume the same facts as in *Example 1*, except that FT is a complex trust under section 661. PRS distributes $60 to FT, which FT includes in its fiduciary accounting income. FT distributes the $60 of fiduciary accounting income to NRA and also properly distributes an additional $40 to NRA from FT's principal. FT will report the $100 of ECTI in its gross income and may deduct the $60 required to be distributed to NRA under section 661(a)(1) and may deduct the $40 distributed to NRA under section 661(a)(2). Pursuant to paragraph (d)(2)(iii) of this section, FT may not claim a credit under section 33 for any of the $35 of 1446 tax paid by PRS. NRA is required to include $100 of the ECTI in gross income under section 662 (as ECTI) and may claim a $35 credit under section 33 for the 1446 tax paid by PRS ($35 less $0).

(e) *Liability of partnership for failure to withhold*—(1) *In general.* Every partnership required to pay 1446 tax is made liable for that tax by section 1461. Therefore, a partnership that is required to pay 1446 tax but fails to do so, or pays less than the amount required under this section, is liable under section 1461 for the payment of the tax required to be withheld under chapter 3 of the Internal Revenue Code and the regulations thereunder unless, and to the extent, the partnership can demonstrate pursuant to paragraph (e)(2) of this section, to the satisfaction of the Commissioner or his delegate, that a foreign partner has paid the full amount of tax required to be paid by such partner to the Internal Revenue Service. See paragraph (e)(3) of this section and section 1463 regarding a partnership's liability for penalties and interest even though a foreign partner has satisfied the underlying tax liability. See also §1.1461–3 for applicable penalties when a partnership fails to pay 1446 tax. See paragraph (b) of this section for an addition to the tax under section 6655 when there is an underpayment of 1446 tax.

(2) *Proof that tax liability has been satisfied and deemed payment of 1446 tax.* Proof of payment of tax may be established for purposes of paragraph (e)(1) of this section consistent with §1.1445–1(e)(3). Under that standard, a partnership must provide sufficient information to the IRS to determine that the partner's tax liability was satisfied or established to be zero in accordance with the rules of this section. Under this section, a partnership's liability for 1446 tax shall be deemed to have been satisfied (deemed payment), to the extent of the 1446 tax due with respect to the ECTI allocable to a foreign partner, on the later of the date that such partner is considered to have paid all tax that is required to be shown on such partner's U.S. income tax return under section 6513(a) and (b)(2) (prescribing the date tax is considered paid for purposes of sections 6511(b)(2), (c), and 6512), or the last date for payment of the 1446 tax without extensions (the unextended due date for Form 8804). The deemed payment rule of this paragraph (e)(2) shall apply for purposes sections of 1446, 1461, and 1463, and any additions to the tax, interest, or penalties potentially applicable to such partnership under section 1446, including sections 6601, 6651, and 6655. Any deemed payment of 1446 tax under this paragraph (e)(2) shall not be treated as a deemed distribution under section 1446(d) and this section.

(3) *Liability for interest, penalties, and additions to the tax*—(i) *Partnership.* Notwithstanding paragraph (e)(2) of this section, a partnership that fails to pay 1446 tax is not relieved from liability under section 6655 (as applied through this section) or for interest under section 6601, when applicable. See §1.1463–1. Such liability may exist even if there is no underlying tax liability due from a foreign partner on its allocable share of partnership ECTI. The addition to the tax under section 6655 or the interest charge under section 6601 that is required by those sections shall be imposed as set forth in those sections, as modified by this section. The section 6601 interest charge shall accrue beginning on the last date prescribed for payment of the 1446 tax due under section 1461 (which is the due date, without extensions, for filing Form 8804). The section 6601 interest charge shall stop accruing on the 1446 tax liability on the date, and to the extent, that the unpaid tax liability under section 1446 is satisfied (or is deemed satisfied under this paragraph (e)). Further, a partnership's liability under section 6655 (as applied through this section) for any underpaid installment payment shall accrue beginning

on the relevant installment payment date, and shall stop accruing on the earlier of the date (and to the extent) that the 1446 tax liability is actually satisfied or the date prescribed in paragraph (b)(2)(v)(C) of this section. See paragraph (e)(4) of this section for examples illustrating that a partner's payment of estimated tax has no effect on the partnership's calculation of its addition to the tax under section 6655 and this section. See § 1.1461–3 for a list of the additions to tax, interest, and penalties that may apply to a partnership that fails to comply with section 1446. See § 1.1446–6(d)(2)(i) for exceptions to the application of the addition to the tax under section 6655 (as applied through this section) when a partnership reasonably relies on a foreign partner's certificate to reduce 1446 tax.

(ii) *Foreign partner*. A foreign partner is permitted to reduce any addition to the tax under section 6654 or section 6655 by the amount of any section 6655 addition to the tax paid by the partnership with respect to the partnership's failure to pay adequate installment payments of the 1446 tax on ECTI allocable to the foreign partner.

(4) *Examples*. The following examples illustrate the application of this section. In considering the examples, disregard the potential application of paragraph (b)(2)(v)(F) of this section (relating to the *de minimis* exception to paying 1446 tax). Further, in each of the examples where a partnership is deemed to have paid 1446 tax with respect to ECTI allocable to a partner, it is assumed that the partnership has presented to the IRS the appropriate information under paragraph (e)(2) of this section for the IRS to conclude that the deemed payment is appropriate. The examples are as follows:

Example 1. Foreign partnership fails to pay 1446 tax and sole foreign partner fails to pay all tax required to be shown on partner's U.S. income tax return. (i) PRS is a foreign partnership engaged in a trade or business in the United States and has two equal partners, A, a U.S. person, and B, a nonresident alien. PRS is described in § 1.6081–5(a) (PRS keeps its books and records outside the United States and Puerto Rico) and, therefore, is required to file Form 8804 by the 15th day of the 6th month following the close of its taxable year. Both partners and PRS are calendar year taxpayers. PRS has received a valid Form W–9 and W–8BEN from A and B, respectively, but has not received any other documents or certificates. B is engaged in multiple trades or businesses (including the PRS partnership) that give rise to effectively connected income. PRS will use an acceptable annualization method under this section for computing its 1446 tax.

(ii) In PRS's first year of operations (Year 1), PRS estimates for each installment period described in § 1.1446–3 that B will be allocated $100 of ordinary ECTI for the taxable year. Therefore, for each installment period PRS is required to pay one fourth of the tax on the annualized ECTI allocable to B, or $8.75 (.25 × ($100 × .35)). PRS fails to make any installment payments. PRS's operations actually result in $100 of ECTI allocated to B. Therefore, PRS was required to have paid 1446 tax of $35 on or before the due date, without extensions, for filing its Form 8804 which is June 15, Year 2 (the last date prescribed for payment of the 1446 tax). PRS does not file Forms 8804 or 8805.

(iii) B pays estimated taxes and makes the following payments on the following dates: June 15, Year 1—$20, September 15, Year 1—$15, and January 15, Year 2—$10. B's total estimated tax payments equal $45. B files its U.S. Federal income tax return timely on June 15, Year 2, and reports all effectively connected income required to be shown on its return. Assume that B's total correct tax liability as shown on the return is $50. B does not make a payment with its return and so B still owes $5 to the Internal Revenue Service (excluding any interest, penalties, and additions to the tax that may apply). Assume that B is not subject to an addition to the tax under section 6654.

(iv) Under the rules of paragraph (e)(2) of this section, for purposes of sections 1446, 1461, and 1463, PRS is not considered to have paid any 1446 tax because B has not paid all of B's U.S. income tax liability.

(v) Further, under the principles of section 6655 and the rules of § 1.1446–3(e), a partner's estimated tax payments will not affect the calculation of a partnership's addition to the tax. Accordingly, PRS will be liable under the principles of section 6655 and § 1.1446–3 for failing to withhold for each installment payment. The addition to the tax will accrue beginning with the due date of each installment payment on the $8.75 underpayment for each respective installment period and will continue to accrue until June 15, Year 2 (the date prescribed in paragraph (b)(2)(v)(C) of this section).

(vi) Further, beginning on June 15, Year 2 (the last date prescribed for payment of 1446 tax without extensions), PRS will be liable for interest under section 6601 with respect to the unpaid 1446 tax, $35. This interest will stop accruing on the earlier of the date that the 1446 tax is paid by PRS or is deemed paid

under paragraph (e)(2) of this section by reason of B's payment of its full tax liability.

(vii) Further, beginning on June 15, Year 2 (the due date for filing Form 8804), PRS will be liable for the addition to the tax under section 6651(a)(1) for failing to file Form 8804. This addition to the tax accrues on the amount required to be shown as the 1446 tax liability on Form 8804, $35. This addition to the tax will accrue at the rate of 5 percent per month until the date that PRS files Form 8804 for Year 1, or the maximum accrual of the penalty (25 percent of the tax required to be shown on the return) under that section has been reached.

(viii) PRS may be liable for other penalties and additions to the tax for its failure to withhold or to furnish statements to its foreign partner B. See §1.1461–3 for a list of the penalties that may apply.

Example 2. Foreign partnership fails to pay 1446 tax but sole foreign partner pays all tax required to be shown on the partner's U.S. income tax return. The facts are the same as *Example 1*, except that B pays $5 with the filing of B's return and has therefore paid all tax required to be shown on B's return within the meaning of paragraph (e)(2) of this section.

(i) For purposes of sections 1446, 1461, and 1463, PRS is deemed to have paid its 1446 tax liability under paragraph (e)(2) of this section as of the later of the date that B is considered to have paid its tax under section 6513(a) and (b)(2) (June 15, Year 2) and the last date for PRS to pay its 1446 tax without extensions (also June 15, Year 2). Therefore, PRS is deemed to have paid all of its 1446 tax liability as of June 15, Year 2. PRS has no continuing liability for 1446 tax under section 1461, however, additions to the tax, interest, and penalties may apply.

(ii) For purposes of section 6655 and §1.1446–3, under paragraph (e)(2) PRS is deemed to have paid its 1446 tax on June 15, Year 2. Even if B had fully paid its tax liability as of March 15, Year 2, the rule in paragraph (e)(2) of this section would not deem PRS to have paid its 1446 tax until June 15, Year 2. As a result, B's estimated tax payments will have no effect on PRS's calculation of its addition to the tax. The addition to the tax under 6655 and §1.1446–3 shall begin to accrue on each installment date with respect to the underpaid installment ($8.75), and will stop accruing on June 15, Year 2, the date prescribed in paragraph (b)(2)(v)(C) of this section.

(iii) Because PRS is deemed to have paid its full 1446 tax liability as of June 15, Year 2 (the last date prescribed for payment of 1446 tax without extensions), PRS is not subject to an interest charge under section 6601, or a failure to file penalty under section 6651 (see section 6651(b)(1)).

(iv) PRS may be liable for other penalties and additions to the tax for its failure to withhold or to furnish statements to its foreign partner B. See §1.1461–3 for a list of the penalties that may apply.

(v) If PRS had several foreign partners, PRS would conduct the same analysis as set forth above with respect to each partner. That is, under paragraph (e) of this section, PRS may be deemed to have paid 1446 tax with respect to the ECTI allocable to some but not all of its foreign partners.

Example 3. Domestic partnership fails to pay 1446 tax but sole foreign partner fully pays all tax required to be shown on partner's U.S. income tax return. The facts are the same as *Example 2*, except that PRS is a domestic partnership whose last date prescribed for paying 1446 tax without extensions (*i.e.*, generally the unextended due date for Form 8804) is April 15, Year 2.

(i) For purposes of sections 1446, 1461, and 1463, PRS is deemed to have paid its 1446 tax liability on the later of the date that B is considered to have paid tax under section 6513(a) and (b)(2) (June 15, Year 2) and the last date for paying 1446 tax without extensions (*i.e.*, the unextended due date for Form 8804, April 15, Year 2). Accordingly, PRS is not considered to have fully paid its 1446 tax liability until June 15, Year 2. PRS has no continuing liability for 1446 tax under section 1461, however, additions to the tax, interest, and penalties may apply.

(ii) For purposes of section 6655 and §1.1446–3, PRS is subject to an underpayment addition to the tax that accrues on the same amount as in *Example 1* and *Example 2* because PRS is not deemed to have paid 1446 tax under paragraph (e)(2) of this section until June 15, Year 2. The addition to the tax will stop accruing on the date prescribed in paragraph (b)(2)(v)(C) of this section (*i.e.*, April 15, Year 2, the due date, without extensions, for filing Form 8804).

(iii) For purposes of section 6601, as of the last date prescribed for paying 1446 tax without extensions (April 15, Year 2), PRS has not paid or been deemed to have paid any 1446 tax. Accordingly, the interest charge under section 6601 shall begin to accrue on April 15, Year 2, and shall accrue until the 1446 liability is paid or deemed to have been paid. In this case, the interest charge will accrue until June 15, Year 2, the date that PRS is deemed to have paid its 1446 tax under paragraph (e)(2) of this section.

(iv) For purposes of section 6651(a)(1), as of April 15, Year 2, PRS's amount required to be shown as tax on its Form 8804 is $35. This amount cannot be reduced under section 6651(b)(1) because PRS is not deemed to have paid 1446 tax under paragraph (e)(2) of this section until June 15, Year 2, a date falling after the last date for PRS to pay its 1446 tax, April 15, Year 2. Accordingly, the failure to file penalty will begin to accrue on April 15, Year 2 (filing due date for Form 8804), and shall stop accruing on the earlier of the date that PRS files Form 8804 or the maximum

accrual of the penalty (25 percent of the amount required to be shown as tax on the return) is reached.

(v) PRS may be liable for other penalties and additions to the tax for its failure to withhold or to furnish statements to its foreign partner B. See §1.1461–3 for a list of the penalties that may apply.

(f) *Effect of withholding on partner.* The payment of the 1446 tax by a partnership does not excuse a foreign partner to which a portion of ECTI is allocable from filing a U.S. tax or informational return, as appropriate, with respect to that income. Information concerning installment payments of 1446 tax paid during the partnership's taxable year on behalf of a foreign partner shall be provided to such foreign partner in accordance with paragraph (d) of this section and such information may be taken into account by the foreign partner when computing the partner's estimated tax liability during the taxable year. Form 1040NR, ''U.S. Nonresident Alien Income Tax Return,'' Form 1065, ''U.S. Return of Partnership Income,'' Form 1120F, ''U.S. Income Tax Return of a Foreign Corporation,'' or such other return as appropriate, must be filed by the partner, and any tax due must be paid, by the filing deadline (including extensions) generally applicable to such person. Pursuant to paragraph (d) of this section, a partner may generally claim a credit under section 33 for its share of any 1446 tax paid by the partnership against the amount of income tax (or 1446 tax in the case of tiers of partnerships) as computed in such partner's return. See §1.1446–3(e)(3)(ii) for rules permitting a partner to reduce its addition to tax under section 6654 or section 6655.

[T.D. 9200, 70 FR 28717, May 18, 2005, as amended by T.D. 9394, 73 FR 23074, Apr. 29, 2008]

§ 1.1446–4 Publicly traded partnerships.

(a) *In general.* This section sets forth rules for applying the section 1446 withholding tax (1446 tax) to publicly traded partnerships. A publicly traded partnership (as defined in paragraph (b) of this section) that has effectively connected gross income, gain or loss must pay 1446 tax by withholding from distributions to a foreign partner. Publicly traded partnerships that withhold on distributions must pay over and report any 1446 tax as provided in paragraph (c) of this section, and generally are not to pay over and report the 1446 tax under the rules in §1.1446–3. The amount of the withholding tax on distributions, other than distributions excluded under paragraph (f) of this section, that are made during any partnership taxable year, equals the applicable percentage (defined in paragraph (b)(2) of this section) of such distributions. For penalties and additions to the tax for failure to comply with this section, see §§1.1461–1 and 1.1461–3.

(b) *Definitions*—(1) *Publicly traded partnership.* For purposes of this section, the term publicly traded partnership has the same meaning as in section 7704 (including the regulations thereunder), but does not include a publicly traded partnership treated as a corporation under that section.

(2) *Applicable percentage.* For purposes of this section, applicable percentage shall have the meaning as set forth in §1.1446–3(a)(2), except that the partnership or nominee required to pay 1446 tax may not consider a preferential rate in computing the 1446 tax due with respect to a partner.

(3) *Nominee.* For purposes of this section, the term nominee means a domestic person that holds an interest in a publicly traded partnership on behalf of a foreign person.

(4) *Qualified notice.* For purposes of this section, a qualified notice is a notice given by a publicly traded partnership regarding a distribution that is attributable to effectively connected income, gain or loss of the partnership, and in accordance with the notice requirements with respect to dividends described in 17 CFR 240.10b–17(b)(1) or (3) issued pursuant to the Securities Exchange Act of 1934 (15 U.S.C. 78a). See paragraph (d) of this section regarding when a nominee is considered to have received a qualified notice.

(c) *Paying and reporting 1446 tax.* The withholding tax required under this section is to be paid pursuant to the rules and procedures of section 1461, §§1.1461–1, 1.1461–2, and 1.6302–2, as supplemented by the rules of this section. However, the reimbursement and set-

off procedures set forth in §1.1461–2 shall not apply. A withholding agent under this section must use Form 1042, ''Annual Withholding Tax Return for U.S. Source Income of Foreign Persons,'' and Form 1042–S, ''Foreign Person's U.S. Source Income Subject to Withholding,'' to report withholding from distributions under this section. See §1.1461–1(b). Further, a withholding agent under this section may obtain a refund for 1446 tax paid in accordance with section 1464 and the regulations thereunder. See §1.1446–3(d)(1)(iv) and (vii) (relating to a foreign trust or estate that holds an interest in a publicly traded partnership) and §1.1446–5(d) (relating to a publicly traded partnership that is part of a tiered partnership structure) for additional guidance.

(d) *Rules for designation of nominees to withhold tax under section 1446*. A nominee that receives a distribution from a publicly traded partnership subject to withholding under this section, and which is to be paid to (or for the account of) any foreign person, may be treated as a withholding agent under this section. A nominee is treated as a withholding agent under this section only to the extent of the amount specified in the qualified notice (as defined in paragraph (b)(4) of this section) received by the nominee. A nominee is treated as receiving a qualified notice at the time such notice is published in accordance with 17 CFR 240.10b–17(b)(1) or (3). Where a nominee is designated as a withholding agent with respect to a foreign partner of the partnership, the obligation to withhold on distributions to such foreign partner in accordance with the rules of this section shall be imposed solely on the nominee. A nominee responsible for withholding under the rules of this section shall be subject to liability under sections 1461 and 6655, as well as all applicable penalties and interest, as if such nominee was a partnership responsible for withholding under this section.

(e) *Determining foreign status of partners*. The rules of §1.1446–1 shall apply in determining whether a partner of a publicly traded partnership is a foreign partner for purposes of the 1446 tax. A partnership or nominee obligated to withhold under this section shall be entitled to rely on any of the forms acceptable under §1.1446–1 received from persons on whose behalf it holds interests in the partnership to the same extent a partnership is entitled to rely on such forms under those rules.

(f) *Distributions subject to withholding*—(1) *In general*. Except as provided in this paragraph (f)(1), a publicly traded partnership must withhold at the applicable percentage with respect to any actual distribution made to a foreign partner. The amount of a distribution subject to 1446 tax includes the amount of any 1446 tax required to be withheld on the distribution. In the case of a partnership (upper-tier partnership) that receives a partnership distribution from another partnership in which it is a partner (lower-tier partnership) (*i.e.*, a tiered structure described in §1.1446–5), any 1446 tax that was paid by the lower-tier partnership may be credited by the upper-tier partnership and shall be treated as a distribution under section 1446. For example, a foreign publicly traded partnership, UTP, owns an interest in domestic publicly traded partnership, LTP. LTP makes a distribution subject to section 1446 of $100 to UTP during its taxable year beginning January 1, 2005, and withholds 35 percent (the highest rate in section 1)($35) of that distribution under section 1446. UTP receives a net distribution of $65 which it immediately redistributes to its partners. UTP has a liability to pay 35 percent of the total actual and deemed distribution it makes to its foreign partners as a section 1446 withholding tax. UTP may credit the $35 withheld by LTP against this liability as if it were paid by UTP. See §1.1462–1(b) and §1.1446–5(b)(1). When UTP distributes the $65 it actually receives from LTP to its partners, UTP is treated for purposes of section 1446 as if it made a distribution of $100 to its partners ($65 actual distribution and $35 deemed distribution). UTP's partners (U.S. and foreign) may claim a credit against their U.S. income tax liability for their allocable share of the $35 of 1446 tax paid on their behalf.

(2) *In-kind distributions*. If a publicly traded partnership distributes property other than money, the partnership shall not release the property until it

has funds sufficient to enable the partnership to pay over in money the required 1446 tax.

(3) *Ordering rule relating to distributions.* Distributions from publicly traded partnerships are deemed to be paid out of the following types of income in the order indicated—

(i) Amounts attributable to income described in section 1441 or 1442 that are not effectively connected, without regard to whether such amounts are subject to withholding because of a treaty or statutory exemption;

(ii) Amounts effectively connected with a U.S. trade or business, but not subject to withholding under section 1446 (e.g., amounts exempt by treaty);

(iii) Amounts subject to withholding under section 1446; and

(iv) Amounts not listed in paragraphs (f)(3)(i) through (iii) of this section.

(4) *Coordination with section 1445(e)(1).* Except as otherwise provided in this section, a publicly traded partnership that complies with the requirements of withholding under section 1446 and this section will be deemed to have satisfied the requirements of section 1445(e)(1) and the regulations thereunder. Notwithstanding the excluded amounts set forth in paragraph (f)(3) of this section, distributions subject to withholding at the applicable percentage shall include the following—

(i) Amounts subject to withholding under section 1445(e)(1) upon distribution pursuant to an election under § 1.1445–5(c)(3) of the regulations; and

(ii) Amounts not subject to withholding under section 1445 because the distributee is a partnership or is a foreign corporation that has made an election under section 897(i).

[T.D. 9200, 70 FR 28717, May 18, 2005]

§ 1.1446–5 Tiered partnership structures.

(a) *In general.* The rules of this section shall apply in cases where a partnership (lower-tier partnership) that has effectively connected taxable income (ECTI), has a partner that is a partnership (upper-tier partnership). Except as provided in paragraph (e) of this section, if an upper-tier domestic partnership directly owns an interest in a lower-tier partnership, the lower-tier partnership is not required to pay the section 1446 withholding tax (1446 tax) with respect to the upper-tier partnership's allocable share of net income, regardless of whether the upper-tier domestic partnership's partners are foreign. Paragraph (b) of this section prescribes the reporting requirements for upper-tier and lower-tier partnerships subject to section 1446. Paragraph (c) of this section prescribes rules requiring a lower-tier partnership to look through an upper-tier foreign partnership to a partner of such upper-tier partnership to the extent it has sufficient documentation to determine the status of such partner and determine such partner's indirect share of the lower-tier partnership's effectively connected taxable income (ECTI). Paragraph (d) of this section prescribes rules applicable to a publicly traded partnership in a tiered partnership structure. Paragraph (e) of this section prescribes rules permitting a domestic upper-tier partnership to elect to apply the look through rules of paragraph (c) of this section. Paragraph (f) of this section sets forth examples illustrating the rules of this section.

(b) *Reporting requirements*—(1) *In general.* Notwithstanding paragraph (c) of this section, to the extent that an upper-tier partnership that is a foreign partnership is a partner in a lower-tier partnership, and the lower-tier partnership has paid 1446 tax (including installment payments of such tax) with respect to ECTI allocable to the upper-tier partnership, the lower-tier partnership shall comply with §§ 1.1446–1 through 1.1446–3 and provide the upper-tier partnership notice of such payments and a copy of the statements and forms filed with respect to the upper-tier partnership's interest in the lower-tier partnership (e.g., Form 8805, ''Foreign Partner's Information Statement of Section 1446 Withholding Tax''). The upper-tier partnership may treat the 1446 tax (or any installment of such tax) paid by the lower-tier partnership on its behalf as a credit against its liability to pay 1446 tax (or any installment of such tax), as if the upper-tier partnership actually paid over the amounts at the time that the amounts were paid by the lower-tier partnership. See § 1.1462–1(b) and § 1.1446–3(d). To the extent required in § 1.1446–

3(d)(1)(iii), the upper-tier partnership will file Form 8804, ''Annual Return for Partnership Withholding Tax (Section 1446),'' and Form 8805, ''Foreign Partner's Information Statement of Section 1446 Withholding Tax,'' for each of its foreign partners with respect to its 1446 tax obligation. To the extent the upper-tier partnership does not claim a refund of the 1446 tax it paid (or is considered to have paid), the upper-tier partnership will pass the credit for the 1446 tax paid to its partners on the Forms 8805 it issues. See §1.1446–3(d). The rules of this paragraph (b) shall apply to an upper-tier and lower-tier partnership to the extent that an election has been made and consented to under paragraph (e) of this section.

(2) *Publicly traded partnerships*. In the case of an upper-tier foreign partnership that is a publicly traded partnership, the rules of §1.1446–4(c) shall apply. See also paragraph (d) of this section.

(c) *Look through rules for foreign upper-tier partnerships*. For purposes of computing the 1446 tax obligation of a lower-tier partnership, if an upper-tier foreign partnership owns an interest in the lower-tier partnership, the upper-tier partnership's allocable share of ECTI from the lower-tier partnership shall be treated as allocable to a partner of the upper-tier partnership, to the extent of such partner's indirect share of such ECTI (as if such partner were a direct partner in the lower-tier partnership), if—

(1) The upper-tier foreign partnership furnishes the lower-tier partnership a valid Form W–8IMY, ''Certificate of Foreign Intermediary, Flow Through Entity, or Certain U.S. Branches for United States Tax Withholding,'' indicating that it is a look-through foreign partnership for purposes of section 1446; and

(2) The lower-tier partnership can reliably associate (within the meaning of §1.1441–1(b)(2)(vii)) effectively connected partnership items allocable to the upper-tier partnership (and indirectly to such partner) with a Form W–8 (e.g., Form W–8BEN), Form W–9, ''Request for Taxpayer Identification Number and Certification,'' or other form acceptable under §1.1446–1, establishing the status of such partner provided by the upper-tier partnership. The lower-tier partnership required to pay 1446 tax must be able to provide the information necessary for the IRS to determine the chain of ownership, allocation of effectively connected items at each partnership level, as well as to the ultimate beneficial owner of the effectively connected items, and whether the amount of 1446 tax paid was appropriate. This information should permit each partnership in the tiered structure and the IRS to reliably associate any effectively connected items allocable to such upper-tier partnership, as well as to the ultimate beneficial owner of the effectively connected items. The principles of §1.1441–1(b)(2)(vii) shall apply to determine whether a lower-tier partnership can reliably associate effectively connected partnership items allocable to the upper-tier partnership with a partner of the upper-tier partnership. To the extent the lower-tier partnership receives a valid Form W–8IMY from the upper-tier partnership but cannot reliably associate a portion of the upper-tier partnership's allocable share of effectively connected partnership items with a partner of such upper-tier partnership, then the lower-tier partnership shall pay 1446 tax on such portion at the higher of the applicable percentages in section 1446(b). See §1.1446–3(a)(2) for the treatment of any income or gain potentially subject to a preferential rate. If a lower-tier partnership has not received a valid Form W–8IMY from the upper-tier partnership, the lower-tier partnership shall withhold on the upper-tier partnership's entire allocable share of ECTI at the higher of the applicable percentages in section 1446(b). The look through regime set forth in this paragraph (c) is for purposes of computing the lower-tier partnership's 1446 tax obligation only and does not alter the persons considered to be partners in the lower-tier partnership for partnership reporting purposes (e.g., issuing Form 8805, Schedule K–1).

(d) *Publicly traded partnerships*—(1) *Upper-tier publicly traded partnership*. The rules set forth in paragraph (c) shall not apply to look through an upper-tier partnership whose interests

are publicly traded (as defined in §1.1446–4(b)(1)).

(2) *Lower-tier publicly traded partnership*. The look through rules of paragraph (c) of this section shall apply, if the requirements of that paragraph are met, to a lower-tier partnership that is a publicly traded partnership within the meaning of §1.1446–4(b)(1) only if the upper-tier partnership is not described in paragraph (d)(1) of this section. For example, a lower-tier publicly traded partnership (or nominee) shall look through an upper-tier foreign partnership (or domestic partnership to the extent an election is made and consented to under paragraph (e) of this section) when computing its 1446 tax liability, provided the upper-tier partnership is not a publicly traded partnership and the appropriate documentation needed to satisfy the standards set forth in §1.1441–1(b)(2)(vii) and paragraph (c) of this section have been furnished.

(e) *Election by a domestic upper-tier partnership to apply look through rules*—(1) *In general*. Subject to the rules of this paragraph (e), a domestic partnership that is a partner in a lower-tier partnership may elect to apply the rules of this section 1.1446–5 and have the lower-tier partnership look through such upper-tier partnership to the partners of such domestic partnership for purposes of computing the lower-tier partnership's 1446 tax liability. A domestic partnership shall make this election by attaching to the Form W–9 submitted to the lower-tier partnership, a written statement and information (described in paragraph (e)(2) of this section) that identifies the upper-tier partnership as a domestic partnership and that states that such partnership is making the election under this paragraph (e). This paragraph (e)(1) shall not apply to a publicly traded partnership described in §1.1446–4(b)(1). See paragraph (d)(1) of this section.

(2) *Information required for valid election statement*. In addition to the requirements of paragraphs (e)(1) and (3) of this section, the election statement submitted under this paragraph (e)(2) is not valid and cannot be accepted by the lower-tier partnership pursuant to paragraph (e)(3) of this section unless the upper-tier partnership attaches valid documentation pursuant to §1.1446–1 (e.g., Form W–8BEN) with respect to one or more of its foreign partners. The information and documentation submitted with the election must comply with the rules of this section to permit the lower-tier partnership to reliably associate (within the meaning of §1.1441–1(b)(2)(vii)) at least a portion of the upper-tier partnership's allocable share of ECTI with one or more foreign partners of the upper-tier partnership. The election statement must identify the upper-tier partnership by name, address, and TIN, and specify the percentage interest the domestic partnership holds in the lower-tier partnership. The statement may also include such information the upper-tier partnership deems necessary to enable the lower-tier partnership to apply the provisions of this section. If at any time the upper-tier partnership determines that the information or documentation previously provided to the lower-tier partnership is no longer correct, the upper-tier partnership shall update such information and documentation. Except as provided in paragraph (e)(3) of this section, an election that is effective under this paragraph (e) shall apply for subsequent taxable years until such upper-tier partnership revokes the election in writing. A revocation under this section shall be effective for any installment due date arising more than 15 days subsequent to the date that the lower-tier partnership receives such revocation.

(3) *Consent of lower-tier partnership*. An election made under this paragraph (e) is not effective until the lower-tier partnership consents in writing to the upper-tier partnership that it agrees to apply the provisions of this section. A lower-tier partnership may not consent to an election submitted under this paragraph (e) for any installment date or Form 8804 filing date arising within 15 days of the lower-tier partnership's receipt of such election. The lower-tier partnership's written consent must specify the extent to which it will look through the upper-tier partnership in computing its 1446 tax (or any installment of such tax). To the extent that the lower-tier partnership does not consent to an election to apply the look through provisions of paragraph

(c) of this section, the lower-tier partnership shall consider such portion of the upper-tier partnership's allocable share of ECTI as allocable to a domestic person for purposes of computing its 1446 tax obligation. A lower-tier partnership that has consented to an election under this paragraph (e) may revoke or modify its consent, in writing, at any time.

(f) *Examples*. The following examples illustrate the provisions of this section. In considering the examples, disregard the potential application of §1.1446–3(b)(2)(v)(F) (relating to the *de minimis* exception to paying 1446 tax). The examples are as follows:

Example 1. Sufficient documentation—tiered partnership structure. (i) Nonresident alien (NRA) and foreign corporation (FC) are partners in PRS, a foreign partnership, and share profits and losses in PRS 70 and 30 percent, respectively. All of PRS's partnership items are allocated based upon each partner's respective ownership interest and it is assumed that these allocations are respected under section 704(b) and the regulations thereunder. NRA and FC each furnish PRS with a valid Form W–8BEN establishing themselves as a foreign individual and foreign corporation, respectively. PRS holds a 40 percent interest in the profits, losses and capital of LTP, a lower-tier partnership. NRA holds the remaining 60 percent interest in profits, losses and capital of LTP. All of LTP's partnership items are allocated based upon each partner's respective ownership interest and it is assumed that these allocations are respected under section 704(b) and the regulations thereunder. LTP has $100 of annualized ECTI for the relevant installment period. All of this income is ordinary income and there is no potential application of a preferential rate applicable percentage under §1.1446–3(a)(2). Further, §1.1446–6 does not apply. PRS has no income other than the income allocated from LTP. PRS provides LTP with a valid Form W–8IMY indicating that it is a foreign partnership and attaches the valid Form W–8BENs executed by NRA and FC, as well as a statement describing the allocation of PRS's effectively connected items among its partners. The information that PRS submits to LTP is sufficient to permit LTP to reliably associate (within the meaning of §1.1441–1(b)(2)(vii)) PRS's allocable share of effectively connected items with NRA and FC pursuant to this section. Further, NRA provides a valid Form W–8BEN to LTP.

(ii) LTP must pay 1446 tax on the $60 allocable to its direct partner NRA using the applicable percentage for non-corporate partners (the highest rate in section 1).

(iii) With respect to the effectively connected partnership items that LTP can reliably associate with NRA through PRS (70 percent of PRS's 40 percent allocable share ($40), or $28), LTP will pay 1446 tax on NRA's allocable share of LTP's ECTI (as determined by looking through PRS) using the applicable percentage for non-corporate partners (the highest rate in section 1).

(iv) With respect to the effectively connected partnership items that LTP can reliably associate with FC through PRS (30 percent of PRS's 40 percent allocable share ($40), or $12), LTP will pay 1446 tax on FC's allocable share of LTP's ECTI (as determined by looking through PRS) using the applicable percentage for corporate partners (the highest rate in section 11).

(v) LTP's payment of the 1446 tax is treated as a distribution to NRA and PRS, its direct partners, that those partners may credit against their respective tax obligations. PRS will report its 1446 tax obligation with respect to its direct foreign partners, NRA and FC, on the Form 8804 and Forms 8805 that it files with the Internal Revenue Service pursuant to paragraph (b) of this section and will credit the amount withheld by LTP on its Form 8804. This credit will satisfy PRS's 1446 tax liability as reported on the Form 8804 it files because PRS's only income is from LTP, and LTP paid 1446 tax with respect to all of PRS's allocable share in LTP by looking through to PRS's partners NRA and FC. Further, PRS will pass along the credit for the 1446 tax withheld by LTP to its partners, NRA and FC on the Form 8805 issued to each partner. The credit passed to each partner on Form 8805 will be treated as a distribution to the respective partners under section 1446(d).

Example 2. Insufficient documentation—tiered partnership structure. (i) LTP is a domestic partnership that has two equal partners A and PRS. A is a nonresident alien and PRS is a foreign partnership that has two equal foreign partners, C and D. Neither A nor PRS provides LTP with a valid Form W–8 or Form W–9. Neither C nor D provides PRS with a valid Form W–8 or Form W–9. Pursuant to §1.1446–1(c)(3), LTP must presume that PRS is a foreign person subject to withholding under section 1446 at the higher of the highest rate under section 1 or section 11(b)(1). LTP has also not received any documentation with respect to A. LTP must presume that A is a foreign person, and, if LTP knows that A is an individual, compute and pay 1446 tax, subject to §1.1446–3(a)(2), based on that knowledge.

(ii) Assume a change of facts where C provides a form W–8 (e.g., Form W–8BEN) to PRS, and PRS in turn, furnishes that form to LTP along with its Form W–8IMY, and information regarding how effectively connected items

are allocated to C and D. Based upon the additional facts, LTP can reliably associate one-half of PRS's allocable share of ECTI with documentation related with C. Therefore, under paragraph (c)(2) of this section, LTP will look through PRS to C when computing its 1446 tax to the extent of C's indirect share and will not look through with respect to the remainder of PRS's allocable share (D's indirect share).

[T.D. 9200, 70 FR 28717, May 18, 2005, as amended by T.D. 9394, 73 FR 23074, Apr. 29, 2008]

§ 1.1446–6 Special rules to reduce a partnership's 1446 tax with respect to a foreign partner's allocable share of effectively connected taxable income.

(a) *In general*—(1) *Purpose and scope.* This section provides rules regarding when a partnership required to pay withholding tax under section 1446 (1446 tax), or an installment of 1446 tax, may consider certain partner-level deductions and losses in computing its 1446 tax obligation under § 1.1446–3, or otherwise not pay a de minimis amount of 1446 tax due with respect to a nonresident alien individual partner. A partnership determines the applicability of the rules of this section on a partner-by-partner basis for each installment period and when completing its Form 8804, ''Annual Return for Partnership Withholding Tax (Section 1446),'' and paying 1446 tax for the partnership taxable year. Except with respect to certain state and local taxes paid by the partnership on behalf of the partner, to apply the rules of this section with respect to a foreign partner, the partnership must receive a certificate from such partner for each partnership taxable year. Paragraph (b) of this section identifies the foreign partners to which this section applies. Paragraph (c) of this section identifies the deductions and losses that a foreign partner may certify to the partnership as well as the state and local taxes paid by the partnership on behalf of the foreign partner that can be taken into account without a certification, and establishes an exception that permits a partnership to not pay a de minimis amount of 1446 tax with respect to a nonresident alien partner. Paragraph (c) of this section also sets forth the requirements for a valid certificate. Paragraphs (a)(2) and (d) of this section establish when a partnership may rely on and consider a foreign partner's certificate in computing its 1446 tax, and the effects of relying on such a certificate. Paragraph (d) of this section also describes the effects of a partnership relying on a certificate (including an updated certificate) and the reporting requirements of a partnership with respect to a certificate. Paragraph (e) of this section sets forth examples that illustrate the rules of this section. Paragraph (f) of this section provides the Effective/Applicability date. Paragraph (g) of this section provides a transition rule.

(2) *Reasonable reliance on a certificate.* Subject to § 1.1446–2 and the rules of this section, a partnership receiving a certificate (including an updated certificate or status update under paragraph (c)(2)(ii)(B) of this section) of deductions and losses from a partner provided in accordance with the provisions of this section may reasonably rely on such certificate (to the extent of the certified deductions and losses or other representations set forth in the certificate) until such time that it has actual knowledge or reason to know that the certificate is defective or that the time for receiving an updated certificate or status update from the partner under paragraph (c)(2)(ii)(B) of this section has expired. For this purpose, a partnership shall be considered to have actual knowledge or reason to know that a certificate is defective upon receipt of written notification from the IRS under paragraph (c)(3) or (c)(5) of this section.

(b) *Foreign partner to whom this section applies*—(1) *In general.* Except as otherwise provided in paragraph (b)(3) of this section, a foreign partner to whom this section applies is a foreign partner that meets the requirements of this paragraph (b)(1).

(i) The partner has provided valid documentation to the partnership to which a certificate is submitted under this section in accordance with § 1.1446–1.

(ii) If the partner's current taxable year is the first taxable year in which

the partner submits a certificate to any partnership, the partner has filed (or will file) a qualifying U.S. income tax return for each of its three taxable years ending before the end of the partnership's taxable year for which the partner is submitting a certificate (regardless of whether it was a partner in that partnership during each of these years). A qualifying U.S. income tax return for a taxable year that is prior to the first taxable year the partner submits a certificate to any partnership is a U.S. income tax return filed within the time specified in paragraph (b)(2)(iii) of this section.

(iii) If the current taxable year of the partner is not the first taxable year in which the partner submits a certificate to any partnership, the partner met the requirements in paragraph (b)(1)(ii) of this section for the first taxable year in which it submitted a certificate to any partnership and has filed (or will file) a qualifying U.S. income tax return for its first taxable year in which it submitted a certificate to any partnership and each subsequent taxable year ending before the beginning of the current taxable year (regardless of whether it was a partner in any partnership during each of those years). A qualifying U.S. income tax return for a taxable year that is prior to the taxable year the partner submits a certificate to any partnership is a U.S. income tax return filed within the time specified in paragraph (b)(2)(iii) of this section.

(iv) The partner files a qualifying U.S. income tax return (within the meaning of paragraph (b)(2)(iii) of this section) for its taxable year in which a certificate is provided to any partnership.

(2) *Definitions*—(i) *U.S. income tax return*. A U.S. income tax return means a Form 1040NR, ''U.S. Nonresident Alien Income Tax Return,'' in the case of a nonresident alien individual and a Form 1120F, ''U.S. Income Tax Return of a Foreign Corporation,'' in the case of a foreign corporation.

(ii) *Timely-filed*. Only for purposes of this section, a U.S. income tax return shall be considered timely-filed if the return is filed on or before the due date set forth in section 6072(c), plus any extension of time to file such return granted under section 6081.

(iii) *Qualifying U.S. income tax return*. A U.S. income tax return shall constitute a qualifying U.S. income tax return if the return reports income or gain that is effectively connected with a U.S. trade or business or deductions or losses properly allocated and apportioned to such activities and if the return is described in paragraph (b)(2)(iii)(A), (B), or (C) of this section. A protective return described in §1.874–1(b)(6) or §1.882–4(a)(3)(vi) is not a qualifying U.S. income tax return for purposes of this section.

(A) A U.S. income tax return for a partner's preceding taxable year in which it did not submit a certificate to any partnership (but not including a taxable year following the first taxable year in which the partner submitted a certificate to any partnership), with a due date as set forth in section 6072(c), not including any extensions of time to file, which falls before the beginning of the current partnership taxable year for which the certificate is provided is described in this paragraph (b)(2)(iii)(A) if the return is filed and all amounts due with respect to such return (including interest, penalties, and additions to tax, if any) are paid on or before the earlier of—

(*1*) The date that is one year after the due date set forth in section 6072(c) for such return, not including any extensions of time to file; or

(*2*) The date on which the certificate for the current partnership taxable year is submitted to the partnership.

(B) A U.S. income tax return for a partner's preceding taxable year in which it did not submit a certificate to any partnership (but not including a taxable year following the first taxable year in which the partner submitted a certificate to any partnership), with a due date as set forth in section 6072(c), not including any extensions of time to file, which falls within the current partnership taxable year for which the certificate is provided is described in this paragraph (b)(2)(iii)(B) if the return is timely-filed and all amounts due with respect to such return are timely paid.

(C) A U.S. income tax return for a taxable year in which the partner submits a certificate to any partnership and for a taxable year following the first taxable year in which the partner submits a certificate to any partnership is described in this paragraph (b)(2)(iii)(C) if the return is timely-filed and all amounts due with such return are timely paid with respect to such return.

(3) *Special rules*—(i) In the case of a partnership (upper-tier partnership) that is a partner in another partnership (lower-tier partnership)—

(A) The rules of this section may apply to reduce or eliminate the 1446 tax (or any installment of such tax) of the lower-tier partnership with respect to a foreign partner of the upper-tier partnership only to the extent the provisions of §1.1446–5 apply to look through the upper-tier partnership to the foreign partner of such upper-tier partnership and the certificate described in paragraph (c) of this section is provided by such foreign partner to the upper-tier partnership and, in turn, provided to the lower-tier partnership with other appropriate documentation (see §1.1446–5(c) and (e));

(B) An upper-tier partnership that submits a certificate of deductions and losses or a de minimis certificate to a lower-tier partnership may not submit that certificate to another lower-tier partnership;

(C) An upper-tier partnership that relies on a certificate submitted to it by a foreign partner under this section for computing its 1446 tax due on effectively connected taxable income (ECTI) allocable to that partner (other than ECTI allocable to it from a lower-tier partnership) may not submit that certificate to any lower-tier partnership; and

(D) In addition to any other information required by this section, a lower-tier partnership must submit with a Form 8813, ''Partnership Withholding Tax Payment Voucher (Section 1446),'' and Form 8805, ''Foreign Partner's Information Statement of Section 1446 Withholding Tax,'' for which it relies on a certificate from an upper-tier partnership to reduce the 1446 tax due with respect to a foreign partner of the upper-tier partnership, sufficient information so that the IRS may reliably associate the ECTI and the certificate of deductions and losses with the partner in the upper-tier partnership submitting the certificate, including the name, taxpayer identification number (TIN) and allocation of effectively connected items at each partnership tier, as well as to the ultimate upper-tier partner submitting the certificate.

(ii) This section shall not apply to a partner that is a foreign estate or its beneficiaries.

(iii) This section shall not apply to a partner that is a trust or to its beneficiaries, except to the extent that such trust is owned by a grantor or other person under subpart E of subchapter J of the Internal Revenue Code, the documentation requirements of §1.1446–1 have been met by the grantor or other owner of such trust, and the certificate described in paragraph (c) of this section is provided by the grantor or other owner of such trust to the partnership.

(iv) This section shall not apply to a partner in a publicly-traded partnership subject to §1.1446–4.

(c) *Reduction of 1446 tax with respect to a foreign partner*—(1) *General rules.* Under paragraph (c)(1)(i) of this section a foreign partner to whom this section applies may certify to a partnership for a partnership taxable year that it has certain deductions (other than charitable deductions) and losses properly allocated and apportioned to gross income that is effectively connected (or treated as effectively connected) with the conduct of the partner's trade or business in the United States, and that the partner reasonably expects those deductions and losses to be available and claimed on the partner's U.S. income tax return to be filed for that taxable year. Under paragraph (c)(1)(ii) of this section, a nonresident alien individual partner to whom this section applies may also certify to a partnership for a partnership taxable year that its only investment or activity giving rise to effectively connected items for the partnership's taxable year that ends with or within the partner's taxable year is (and will be) the partner's investment in the partnership. A certificate submitted by a foreign partner to a partnership under this section must be in accordance with the form

and requirements set forth in paragraph (c)(2)(ii) of this section. Under paragraph (c)(1)(iii) of this section, a partnership may take into account certain state and local taxes withheld by the partnership on behalf of the partner.

(i) *Certified deductions and losses*—(A) *Deductions and losses from the partnership*. Under this paragraph (c)(1)(i)(A), a partner may certify to a partnership for a partnership taxable year deductions (other than charitable deductions) and losses properly allocated and apportioned to gross income which is effectively connected (or treated as effectively connected) with the conduct of the partner's trade or business in the United States, that are reported on a Form 1065 (Schedule K–1), ''Partner's Share of Income, Credits, Deductions, etc.,'' issued (or to be issued) to the partner by the partnership for a prior partnership taxable year, that are (or will be) reported on a qualifying U.S. income tax return for a partner's taxable year that ends before the installment due date or the close of the partnership taxable year for which the partner is certifying such deductions and losses, and that the partner reasonably expects to be available and claimed on a qualifying U.S. income tax return for the partner's taxable year ending with or after the close of the partnership taxable year. A partner that has a loss reported on a Form 1065 (Schedule K–1) issued (or to be issued) to the partner by the partnership for a prior partnership taxable year, but that is not (and will not be) reported on a qualifying U.S. income tax return for a prior taxable year of the partner because the loss is suspended under section 704(d) may also certify such suspended loss to the partnership under this paragraph (c)(1)(i)(A).

(B) *Deductions and losses from other sources*. Under this paragraph (c)(1)(i)(B), a foreign partner may certify to a partnership for a partnership taxable year deductions (other than charitable deductions) and losses properly allocated and apportioned to gross income that is effectively connected (or treated as effectively connected) with the conduct of the partner's trade or business in the United States and that are from sources other than the partnership to whom the certificate is submitted if the deductions and losses are (or will be) reported on a qualifying U.S. income tax return of the partner for a taxable year that ends before the installment due date or the close of the partnership taxable year for which the partner is certifying the deductions and losses and the partner reasonably expects the deductions and losses to be available and claimed on the qualifying U.S. income tax return filed for its taxable year ending with or after the close of the partnership taxable year. Any deductions and losses certified under this paragraph (c)(1)(i)(B) that are allocated to the partner from another partnership must be reported on a Form 1065 (Schedule K–1) issued (or to be issued) to the partner by such other partnership. However, the partner may not certify any deduction or loss allocated to it from another partnership that is suspended under section 704(d).

(C) *Limit on the consideration of a partner's net operating loss deduction*. A partnership may not consider a net operating loss deduction (as determined under section 172) certified by the partner under this paragraph (c)(1)(i) in an amount greater than the percentage limitation, if any, provided in section 56(a)(4) and (d) multiplied by the partner's allocable share of ECTI from the partnership reduced by all other certified deductions and losses whether or not taken into account by the partnership, as well as deductions considered under paragraph (c)(1)(iii) of this section.

(D) *Limitation on losses subject to certain partner level limitations*. Pursuant to paragraph (c)(2)(i) of this section, a partner must identify any certified losses or deductions that are subject to special limitations at the partner level (for example, sections 465 and 469) and provide information to the partnership that will allow the partnership to take the special limitations into account. For example, where a partner certifies a loss to the partnership that is a passive activity loss under section 469, the partner shall identify the activities the partnership conducts that the partner expects will be passive activities. The partnership shall then ensure that

these limitations are taken into account when determining the 1446 tax due with respect to the partner.

(E) *Certification of deductions and losses to other partnerships.* Deductions and losses certified to a partnership for a taxable year of the partnership may not be certified for the taxable year of another partnership that begins or ends with or within the taxable year of the partnership to which the deductions and losses were certified.

(F) *Partner level use of deductions and losses certified to a partnership.* Any deductions and losses certified to a partnership for a taxable year of the partner and considered by the partnership in computing its section 1446 tax due may not be considered by that partner for the same taxable year in computing the amount of its required installments under section 6654(d) or 6655(d) on income unrelated to the partnership to which the partner has submitted the certificate.

(ii) *De minimis certificate for nonresident alien individual partners*—(A) *In general.* Under this paragraph (c)(1)(ii), a nonresident alien individual partner to whom this section applies and that satisfies the requirements of paragraph (c)(1)(ii)(B) of this section may certify to a partnership that its only activity giving rise to effectively connected income, gain, deduction, or loss for the partnership's taxable year that ends with or within the partner's taxable year is (and will be) the partner's investment in the partnership. A partnership that receives a certificate from a nonresident alien partner under this paragraph (c)(1)(ii) and that may reasonably rely on such certificate is not required to pay 1446 tax (or any installment of such tax) with respect to such partner if the partnership estimates that the annualized (or, in the case of a partnership completing its Form 8804, the actual) 1446 tax otherwise due with respect to such partner is less than $1,000, without taking into account any deductions or losses certified by the partner to the partnership under paragraph (c)(1)(i) of this section or any amounts under paragraph (c)(1)(iii) of this section.

(B) *Requirements for exception.* The requirements of this paragraph (c)(1)(ii)(B) are met if the nonresident individual alien partner's only activity giving rise to effectively connected income, gain, deduction, or loss for the partnership taxable year that ends with or within the partner's taxable year is (and will be) the partner's investment in the partnership. For this purpose, if the partner has (or has reason to expect to have) income or gain described in section 864(c)(6), such income or gain shall be considered derived from a separate investment activity. A certificate submitted by a nonresident alien individual partner under this paragraph (c)(1)(ii) is valid even if such certificate does not certify deductions and losses to partnership under this section. A nonresident alien individual partner that submits a certificate to a partnership under this paragraph (c)(1)(ii) must notify the partnership in writing and revoke such certificate within 10 days of the date that the partner invests or otherwise engages in another activity that may give rise to effectively connected income, gain, deduction, or loss for the partner's taxable year. For example, while an investment in a U.S. real property interest (as defined in section 897(c)) would not give rise to an activity requiring a notification (unless an election is in effect under section 871(d)), the disposition of the U.S. real property interest would give rise to an activity requiring a notification.

(iii) *Consideration of certain current year state and local taxes.* In addition to any deductions and losses certified by a foreign partner to a partnership under paragraph (c)(1)(i) of this section, the partnership may consider as a deduction of such partner 90-percent of any state and local income taxes withheld and remitted by the partnership on behalf of such partner with respect to the partner's allocable share of partnership ECTI. The partnership may consider the amount of state and local taxes of the foreign partner determined under this paragraph (c)(1)(iii) regardless of whether the foreign partner submits a certificate to the partnership under paragraph (c)(1)(i) or (ii) of this section.

(2) *Form and time of certification*—(i) *Form of certification.* A partner's certification to a partnership under paragraph (c)(1)(i) or (iii) of this section

shall be made using Form 8804–C, ''Certificate Of Partner-Level Items to Reduce Section 1446 Withholding'' in accordance with the instructions of the form and the rules of this section.

(ii) *Time for certification provided to partnership*—(A) *First certificate submitted for a partnership's taxable year.* Provided the other requirements of this section are met, a partnership may only rely on the first certificate received from a foreign partner for any 1446 tax installment due or Form 8804 filing due (without regard to extensions) on or after the date on which the certificate is received. See §1.1446–3 for 1446 tax installment due dates. See also paragraph (e) of this section for examples illustrating the rules of this paragraph (c)(2).

(B) *Updated certificates and status updates*—(*1*) *Preceding year tax returns not yet filed.* If a foreign partner's U.S. income tax return for a preceding taxable year has not been filed as of the time the partner submits to the partnership its first certificate under this paragraph (c), the certificate shall specify this fact and set forth the filing due date for such return set forth in section 6072(c), plus any extension of time to file such return granted under section 6081 and the regulations under section 6081. The partner shall also submit an updated certificate to the partnership in accordance with this paragraph (c) within 10 days of the date the partner files its U.S. income tax return for any such taxable year. In addition, prior to the partnership's final 1446 tax installment due date the partner shall provide to the partnership, under penalties of perjury, a status update regarding any U.S. income tax return for the prior taxable year that has not (or will not) be filed as of the final installment due date. The status update must identify the due date, set forth in section 6072(c), plus any extension of time to file such return granted under section 6081 and the regulations under section 6081, for any un-filed return identified in the first certificate and state whether the first certificate submitted may continue to be considered by the partnership. If the partnership does not receive an updated certificate or a status update from the partner prior to the partnership's final installment due date, the partnership shall disregard the partner's certificate when computing the 1446 tax due with respect to that partner for the final installment period and when completing its Form 8804 for the taxable year. In addition, the foreign partner shall not be permitted to submit an additional or substitute certificate for the disregarded certificate. See §1.1446–3(b)(2)(i) for computation requirements for installment payments of 1446 tax when a partnership receives, or fails to receive, an updated certificate or status update. See also paragraph (e)(2) *Examples 4 and 8* of this section. Notwithstanding this paragraph (c)(2)(ii)(B)(*1*), a partner that can meet the requirements of this section for a subsequent partnership taxable year may submit a certificate to the partnership under this section for such taxable year.

(*2*) *Other circumstances requiring an updated certificate.* If at any time during the partnership taxable year the partner determines that its most recent certificate furnished to the partnership for such taxable year is incorrect, then the partner shall submit to the partnership an updated certificate in accordance with this paragraph (c) within 10 days of such determination. For example, if the partner determines that the amount or character of the certified deductions or losses is incorrect, the partner shall submit an updated certificate to the partnership. See §1.1446–3(b)(2)(i) for computation requirements for installment payments of 1446 tax when a partnership receives an updated certificate.

(*3*) *Form and content of updated certificate.* The updated certificate required by this paragraph (c)(2)(ii) must be provided using the form and instructions identified in paragraph (c)(2)(i) of this section. The updated certificate must indicate that it is an updated certificate filed in accordance with this paragraph (c)(2)(ii). The partner is not required to attach to the updated certificate a copy of the certificate that is being updated (superseded certificate).

(*4*) *Partnership consideration of an updated certificate.* A partnership may consider an updated certificate, that meets the requirements of this paragraph (c), that is received prior to an

installment due date in the same partnership taxable year for which the superseded certificate was provided, or prior to the due date of its Form 8804 (without regard to extensions) to be filed for the year the superseded certificate was provided. A partnership must consider an updated certificate that meets all the requirements of this paragraph (c) if it would increase the amount of 1446 tax the partnership would pay by the next installment due date, if any, or the due date of its Form 8804. An updated certificate considered by the partnership under this paragraph (c)(2)(ii)(B)(4) supersedes all prior certificates submitted by the foreign partner for the same partnership taxable year, beginning with the installment period or Form 8804 filing date for which the partnership considers the updated certificate. See paragraph (e)(2) *Example 4* of this section.

(3) *Notification to partnership when a partner's certificate cannot be relied upon.* If the IRS determines, in its discretion based on all the facts and circumstances, that a foreign partner's certificate is defective (or that it lacks information sufficient to make this determination after providing written request for such information to the partnership), the IRS shall notify the partnership of such determination in writing. Upon receipt of such written notification, the partnership shall not rely on any certificate submitted by that foreign partner for the partnership taxable year to which the defective certificate relates (or any subsequent partnership taxable year), until the IRS provides written notification to the partnership revoking or modifying the original written notification. For purposes of this section, a foreign partner's certificate of deductions and losses shall be defective if—

(i) The partner is not described in paragraph (b) of this section;

(ii) Any deductions or losses set forth in such certificate are not described in paragraph (c)(1)(i) of this section;

(iii) The timing requirements under paragraph (c)(2) of this section for submitting an original certificate, an updated certificate or a status update to the partnership are not met;

(iv) The certificate does not include all of the information required by paragraph (c)(2)(i) of this section;

(v) Any representation made on the certificate is incorrect;

(vi) The actual amount of deductions and losses available to the partner is less than the amount of deductions and losses certified to the partnership for the partnership taxable year and considered by the partnership in determining its 1446 tax due; or

(vii) There is a failure to comply with any other provision of this section.

(4) *Partner to receive copy of notice.* If the IRS notifies a partnership under paragraph (c)(3) of this section that a certificate of a foreign partner is defective, the IRS shall send a copy of such notice to the partner's address as shown on the certificate. The partnership shall also promptly furnish a copy of the IRS notice to such partner.

(5) *Notification to partnership when no foreign partner's certificate can be relied upon.* If the IRS determines, in its discretion based on all the facts and circumstances, that there would be a substantial reduction in section 1446 tax as a result of the submission of one or more defective certificates or that a substantial portion of all certificates being submitted by partners to the partnership and by the partnership to the IRS are defective (or lack information sufficient to make this determination), then the IRS shall notify the partnership of such determination in writing. Upon receipt of such written notification, the partnership shall not rely on any certificate submitted by any partner for the partnership taxable year to which the notice relates or any subsequent partnership taxable year, until the IRS provides written notification to the partnership revoking or modifying the original notice.

(6) *Partnership notification to partner regarding use of deductions and losses.* Unless §1.1446–3(d)(1)(i)(A) or (B) applies (relating to waiver of notice of tax paid during the partnership taxable year), a partnership must notify each foreign partner of the amount of such partner's certified deductions and losses and state and local taxes, if any, taken into account under this paragraph (c) in determining the 1446 tax due with respect to such partner for

each installment period or Form 8804 filing date, as applicable.

(7) *Partner's certificate valid only for partnership taxable year for which submitted.* A partnership that receives a certificate from a partnership under this paragraph (c) shall consider such certificate only for the partnership taxable year for which the certificate is submitted, as set forth on the certificate.

(d) *Effect of certificate of deductions and losses on partners and partnership*—(1) *Effect on partner*—(i) *No effect on liability for income tax of foreign partner.* A foreign partner that certifies deductions and losses to a partnership under this section is not relieved of liability for income tax on its allocable share of ECTI from the partnership. Further, the submission of a certificate under this section does not constitute an acceptance by the IRS of the amount or character of the deductions or losses certified therein.

(ii) *No effect on partner's estimated tax obligations.* A foreign partner that certifies deductions and losses to a partnership under this section is not relieved of any estimated tax obligation otherwise applicable to such partner with respect to income or gain allocated to such partner from the partnership.

(iii) *No effect on partner's obligation to file U.S. income tax return.* The submission of a certificate under paragraph (c) of this section does not relieve the foreign partner from its obligation to file a U.S. income tax return even if as a result of the partnership considering the certificate the partner would have no additional tax due with such return. See also § 1.1446–3(f).

(2) *Effect on partnership*—(i) *Reasonable reliance to relieve partnership from addition to tax under section 6655.* A partnership that has reasonably relied on a certificate received from a foreign partner and complied with the filing requirements of paragraph (d)(3)(i) of this section, shall not be liable for any addition to tax under section 6655 (as applied through § 1.1446–3) for any period during which the partnership reasonably relied on such certificate, even if such certificate is later determined to be defective or the partner submits an updated certificate under paragraph (c)(2) of this section that increases the 1446 tax due with respect to such partner.

(ii) *Continuing liability for withholding tax under section 1461 and for applicable interest and penalties*—(A) *In general.* Except as otherwise provided in this section, a partnership that has reasonably relied on a certificate received from a foreign partner and complied with the filing requirements of paragraph (d)(3)(i) of this section, is not relieved from liability for the 1446 tax (or any installment of such tax) under section 1461, any additions to the tax, interest or penalties. However, the partnership may be relieved of additions to the tax or penalties in certain circumstances. See §§ 301.6651–1(c) and 301.6724–1 of this chapter. Further, see § 1.1446–3(e) which deems a partnership to have paid 1446 tax with respect to ECTI allocable to a partner in certain circumstances. See also paragraph (e)(2) *Example 5* of this section.

(B) *Certificate defective because of amount or character of deductions and losses.* If a certificate is determined to be defective because the actual amount of deductions and losses available to the partner is less than the amount reflected on the certificate (other than when it is determined that the partner certified the same deduction or loss to more than one partnership), or because the character of the certified deductions and losses is erroneous, the partnership shall be liable for 1446 tax under section 1461 (or any installment of such tax) with respect to such partner to the extent the partnership considered an amount of certified deductions and losses greater than the amount actually available to the partner and permitted to be used under §§ 1.1446–1 through 1.1446–5 and this section, or to the extent that the proper character of the certified deductions and losses results in a greater amount of 1446 tax due with respect to such partner. See paragraph (e)(2) *Example 6* of this section.

(3) *Partnership level rules and requirements*—(i) *Filing requirement.* A partnership that relies in whole or in part on a certificate received from a partner under this section in computing its 1446 tax due with respect to such partner must still file Form 8813 or Form 8804

and 8805, whichever is applicable, for the period for which the certificate is considered, even if as a result of relying on the certificate no 1446 tax (or an installment of such tax) is due with respect to such foreign partner. See generally §1.1446–3(d)(1). Except as otherwise provided in this paragraph (d)(3)(i), the partnership must attach a copy of the foreign partner's certificate, and the computation of the 1446 tax due with respect to such partner, to both the Form 8813 and Form 8805 filed with the IRS for any installment period or year for which such certificate is considered in computing the partnership's 1446 tax. See §1.1446–3(d)(1)(iii) requiring the partnership to furnish Form 8805 to the IRS and such foreign partner even if no 1446 tax is paid on behalf of the partner. The partnership must include in that computation the amount of state and local taxes described in paragraph (c)(1)(iii) of this section taken into account in computing the 1446 tax due with respect to that partner. The partnership must also attach a computation of the 1446 tax due with respect to a partner for whom only state and local taxes described in paragraph (c)(1)(iii) are taken into account. For an installment period other than the first installment period for which the partnership considers a foreign partner's certificate or updated certificate, the partnership may, instead of attaching any partner's certificate, attach to Form 8813 a list containing the name, TIN, the amount of certified deductions and losses, and the amount of state and local taxes the partnership may consider under paragraph (c)(1)(iii) of this section for each foreign partner whose certificate was relied upon. For purposes of the preceding sentence, if the partnership is relying on a certificate received under paragraph (c)(1)(ii) of this section, instead of providing the amounts described in the prior sentence, it should attach a statement to Form 8813 which provides that, relying on that certificate, no 1446 tax is due with respect to that partner.

(ii) *Reasonable cause for failure to timely file a valid certificate and computation.* This paragraph (d)(3)(ii) provides the sole source of relief for a partnership that fails to timely file a valid certificate or attach a computation of 1446 tax as required under paragraph (d)(3)(i) of this section. To permit the partnership to reasonably rely on such certificate, the partnership shall be considered to have satisfied the requirements of paragraph (d)(3)(i) of this section if the partnership demonstrates that such failure was due to reasonable cause and not willful neglect and if once the partnership becomes aware of the failure, the partnership attaches the certificate and computation, as well as a written statement setting forth the reasons for the failure to comply with the requirements of paragraph (d)(3)(i) of this section, to an amended Form 8813 or amended Forms 8804 and 8805 for the relevant period. All such submissions should be sent to the address provided in the instructions to Form 8804–C.

(A) *Determining reasonable cause.* In determining whether the partnership has reasonable cause, the Director shall consider whether the partnership acted reasonably and in good faith considering all the facts and circumstances.

(B) *Notification.* If the IRS has notified, as provided in paragraph (c)(3) of this section, the partnership that the certificate is defective or that no foreign partner's certificate may be relied upon, as provided in paragraph (c)(5) of this section, the partnership will be deemed not to have acted reasonably and in good faith. Otherwise, the Director shall notify the partnership in writing within 120 days of the amended filing if it is determined that the failure to comply was not due to reasonable cause, or if additional time will be needed to make such determination. If the Director fails to notify the partnership within 120 days of the amended filing, the partnership shall be considered to have demonstrated to the Director that such failure was due to reasonable cause and not willful neglect.

(e) *Examples.* (1) The rules of this section are illustrated by the examples in paragraph (e)(2) of this section. Except as otherwise provided, in each example assume:

(i) Section 1.1446–3(b)(2)(v)(F) (relating to the de minimis exception to paying 1446 tax) does not apply;

(ii) Paragraph (c)(1)(ii) of this section (relating to a nonresident alien individual partner whose sole investment generating effectively connected income or gain is the partnership) does not apply;

(iii) All income and losses are ordinary;

(iv) For purposes of applying paragraph (c)(1)(i)(C) of this section, the percentage limitation under section 56(a)(4) and (d) is 90 percent;

(v) Any loss is not a passive activity loss within the meaning of section 469;

(vi) The partnership uses an acceptable annualization method under §1.1446–3;

(vii) NRA is a nonresident alien individual who maintains a calendar taxable year for U.S. tax purpose;

(viii) B and C are U.S. individuals who maintain a calendar taxable year; and

(ix) Any partnership maintains a calendar taxable year.

(2) The examples are as follows:

Example 1. Qualifying U.S. income tax return. (i) NRA and B form a partnership (PRS) in year 4 to conduct a trade or business in the United States. NRA and B provide PRS appropriate documentation under §1.1446–1 to establish their status for purposes of section 1446. NRA submits a certificate to PRS (using Form 8804–C) on March 20, year 4, to be considered by PRS in determining its 1446 tax due with respect to NRA for the first installment period in the year 4. The Form 8804–C states that NRA reasonably expects to have an effectively connected net operating loss of $5,000 available to offset its allocable share of ECTI from PRS in year 4. Prior to year 4, NRA had not submitted a certificate to a partnership under this section. NRA filed (or will file) its year 1 U.S. income tax return on March 11, year 3; its year 2 U.S. income tax return on February 12, year 4; its year 3 U.S. income tax return on April 13, year 4; and its year 4 U.S. income tax return on May 14, year 5. NRA paid or (will pay) all amounts due with respect to the returns (including interest, penalties, and additions to tax, if any) by the date they are filed. NRA's years 1 though 3 U.S. income tax returns report income or gain effectively connected with a U.S. trade or business or deductions or losses properly allocated and apportioned to such activities.

(ii) To be eligible to submit a certificate of deductions and losses to PRS under this section, NRA must satisfy the requirements of paragraph (b)(1) of this section. In accordance with §1.1446–1, NRA provided valid documentation to PRS to establish its status for purposes of section 1446. NRA's year 1 U.S. income tax return is a qualifying U.S. income tax return because it reported income or gain effectively connected with a U.S. trade or business or deductions or losses properly allocated and apportioned to such activities and is described under paragraph (b)(2)(iii)(A) of this section. Although NRA filed its year 1 return after the due date of the return (determined under section 6072(c) without regard to any extension of time to file) the return was filed on March 11, year 3, which was on or before the earlier of June 15, year 3, the date one year after its section 6072(c) due date without regard to any extension of time to file, and March 20, year 4, the date on which NRA submitted the certificate to PRS. NRA's year 2 U.S. income tax return is a qualifying U.S. income tax return because it reported income or gain effectively connected with a U.S. trade or business or deductions or losses properly allocated and apportioned to such activities and is described under paragraph (b)(2)(iii)(A) of this section. Although NRA filed its year 2 return after the due date of the return (determined under section 6072(c) without regard to any extension of time to file) the return was filed on February 12, year 4, which was on or before the earlier of June 15, year 4, the date one year after its section 6072(c) due date without regard to any extension of time to file, and March 20, year 4, the date on which NRA submitted the certificate to PRS. NRA's year 3 U.S. income tax return is a qualifying U.S. income tax return because it reported income or gain effectively connected with a U.S. trade or business or deductions or losses properly allocated and apportioned to such activities and is described under paragraph (b)(2)(iii)(B) of this section. Because NRA filed its year 3 U.S. income tax return on April 13, year 4, the return will be considered timely-filed under paragraph (b)(2)(ii) of this section, as the due date under section 6072(c) was June 15, year 4. NRA's year 4 U.S. income tax return is a qualifying U.S. income tax return because it reported income or gain effectively connected with a U.S. trade or business or deductions or losses properly allocated and apportioned to such activities and is described under paragraph (b)(2)(iii)(C) of this section. Because NRA filed its year 4 U.S. income tax return on May 14, year 5, the return will be considered timely-filed under paragraph (b)(2)(ii) of this section. Accordingly, NRA meets the conditions of paragraph (b)(1) of this section and is eligible to provide a certificate of deductions and losses to PRS for year 4.

Example 2. Subsequent year qualifying U.S. income tax return. (i) Assume the same facts as in Example 1. Further, NRA and C form a second partnership (XYZ) in year 7 to conduct a trade or business in the United States.

NRA and C provide XYZ appropriate documentation under §1.1446–1 to establish their status for purposes of section 1446. NRA did not submit a certificate under this section to any partnership for years 5 and 6. NRA submits a certificate to XYZ (using Form 8804–C) on April 10, year 7, to be considered by XYZ in determining its 1446 tax due with respect to NRA for its first installment period in year 7. The certificate states that NRA reasonably expects to have an effectively connected net operating loss of $8,000 available to offset its allocable share of ECTI from XYZ in year 7. Further, the certificate contains all of the necessary representations required under this section. NRA will file its U.S. income tax return for year 5 on March 25, year 7, (after its section 6072(c) due date and any extension of time to file that could have been granted under section 6081), its U.S. income tax return for year 6 on April 26, year 7; and its U.S. income tax return for year 7 on May 27, year 8. NRA will pay all amounts due with the returns (including interest, penalties, and additions to tax, if any) by the dates they are filed. NRA's years 5, 6, and 7 U.S. income tax returns will report income or gain that is effectively connected with a U.S. trade or business or deductions or losses properly allocated and apportioned to such activities.

(ii) To be eligible to submit a certificate of deductions and losses to XYZ under this section, NRA must satisfy the requirements of paragraph (b)(1) of this section. NRA provided valid documentation to XYZ in accordance with §1.1446–1. As described in Example 1, NRA's year 4 U.S. income tax return is a qualifying U.S. income tax return because it will report income or gain effectively connected with a U.S. trade or business and is described under paragraph (b)(2)(iii)(C) of this section. Although NRA's year 5 U.S. income tax return reports income or gain effectively connected with a U.S. trade or business or deductions or losses properly allocated and apportioned to such activities it is not a qualifying U.S. income tax return under paragraph (b)(2)(iii) of this section. Because NRA submitted a certificate to PRS in year 4, to constitute a qualifying U.S. income tax return the year 5 U.S. income tax return must be timely-filed and all amounts due with such return must be timely paid. See paragraph (b)(2)(iii)(C) of this section. However, NRA will not file its U.S. income tax return for year 5 until March 25, year 7, (after its section 6072(c) due date and any extension of time to file that could have been granted under section 6081). Because the year 5 tax return is not a qualifying U.S. income tax return under paragraph (b)(2)(iii) of this section, NRA does not satisfy the requirements of paragraph (b)(1)(ii) of this section and, therefore, may not submit a certificate of deductions and losses to XYZ under this section in year 7.

Example 3. General application of the rules of this section. NRA and B form a partnership (PRS) to conduct a trade or business in the United States. NRA and B are equal partners under the partnership agreement. NRA and B provide PRS appropriate documentation under §1.1446–1 to establish their status for purposes of section 1446. Prior to the formation of PRS, NRA had not invested in or engaged in the conduct of a U.S. trade or business. PRS incurs a $1,500 effectively connected net operating loss in years 1 and 2. The loss incurred in each is allocated equally between NRA and B. NRA has filed a qualifying U.S. income tax return (within the meaning of paragraph (b)(2)(iii) of this section) for years 1 and 2 that report its allocable share of effective connected net operating loss allocated to it from PRS, as reported on the Form 1065 (Schedule K–1) issued to NRA for each year.

(i) In year 3, NRA may not submit a certificate to PRS under paragraph (c) because it will not have filed qualifying U.S. income tax returns for the preceding three years. In year 3, PRS has ECTI of $1,000 that is allocated equally between NRA and B. PRS satisfies its 1446 tax obligation with respect to NRA for year 3.

(ii) In year 4, PRS estimates that it will have ECTI of $4,000, which will be allocated equally between NRA and B. On or before April 15th of year 4 (the first installment due date), NRA submits a certificate to PRS under this section (using Form 8804–C) certifying that it reasonably expects to have an effectively connected net operating loss of $1,000 ($750 loss in both years 1 and 2, less $500 of income in year 3) available to offset its allocable share of ECTI from PRS in year 4. As of the date the certificate is submitted, NRA has received the Form 1065 (Schedule K–1) from PRS for year 3 but has not yet filed its U.S. income tax return for year 3.

(iii) With respect to year 4, and based upon paragraph (b)(1) of this section, NRA can include year 3 (NRA's preceding taxable year) as one of the preceding three years that it has filed or will file qualifying U.S. income tax returns (within the meaning of paragraph (b)(2)(iii) of this section). Therefore, provided PRS has, in accordance with paragraph (a)(2) of this section, no actual knowledge or reason to know the certificate is defective, PRS may reasonably rely on NRA's certificate. Accordingly, PRS may consider NRA's certificate to reduce the 1446 tax that would otherwise be required to be paid on NRA's behalf. Specifically, subject to paragraph (c)(1)(i)(C) of this section, the $1,000 of net losses that have been reported on Forms 1065 (Schedule K–1) issued to NRA that are available to reduce NRA's U.S. income tax on NRA's allocable share of effectively connected income or gain allocable from PRS may be used to reduce the $2,000 of ECTI estimated to be allocable to NRA. As a result,

PRS must pay 1446 tax on only $1,100 of NRA's allocable share of partnership ECTI for the first installment period in year 5 ($2,000 − ($1,000 × .90)). PRS must pay 1446 tax of $96.25 for its first installment period with respect to the ECTI allocable to NRA ($1,100 (net ECTI after considering certified losses) × .35 (withholding tax rate) × .25 (section 6655(e)(2)(B) percentage for the first installment period)). See §1.1446–3(b)(2). Pursuant to paragraph (d)(3) of this section, PRS must attach NRA's certificate and PRS's computation of its 1446 tax obligation with respect to NRA to its Form 8813, ''Partnership Withholding Tax Payment Voucher (Section 1446),'' filed for the first installment period. Under paragraph (c)(2)(ii)(B) of this section, NRA is required to provide an updated certificate on or before the 10th day after NRA files its U.S. income tax return for year 3, even if the updated certificate results in no change to the amount of deductions and losses reported on the superseded certificate.

(iv) The results are the same if NRA had not yet received a Form 1065 (Schedule K–1) from PRS for year 3. See paragraph (c)(1)(i)(A) of this section.

Example 4. Updated certificate submitted for losses. On January 1, year 8, NRA and B form a partnership (PRS) to conduct a trade or business in the United States. NRA and B are equal partners in PRS. NRA and B provide PRS appropriate documentation under §1.1446–1 to establish their status for purposes of section 1446. During years 1 through 7 NRA held an interest in another partnership (XYZ) that conducted a trade or business in the United States. NRA timely-filed (within the meaning of paragraph (b)(2) of this section) U.S. income tax returns for years 1 through 6 reporting its allocable share of ECTI (or loss) from XYZ (and timely paid all tax shown on such returns). NRA files its U.S. income tax return for year 7 on June 9, year 8 (and timely pays all tax due with such return). Therefore, NRA has filed qualifying U.S. income tax returns (within the meaning of paragraph (b)(2)(iii) of this section) for years 1 through 7. During years 1 through 7, NRA's only investment generating effectively connected items was its interest in XYZ. The XYZ partnership liquidated and ceased doing business on December 31, year 7.

(i) On or before April 15, year 8, PRS receives from NRA a valid certificate under this section using Form 8804–C in which NRA certifies that it reasonably expects to have available effectively connected net operating losses in the amount of $5,000. Among other statements made in accordance with paragraph (c) of this section, NRA represents that it has not yet filed its year 7 U.S. income tax return, but will timely file such return (and timely pay all tax due with such return). For its first installment period in year 8, PRS estimates that it will earn taxable income of $10,000 for the year which will be allocated equally to NRA and B (NRA's allocable share of PRS's ECTI is $5,000).

(ii) Provided PRS has, in accordance with paragraph (a)(2) of this section, no actual knowledge or reason to know the certificate is defective, PRS may reasonably rely on NRA's certificate when computing its 1446 tax obligation for the first installment period. PRS is limited under paragraph (c)(1)(i)(C) of this section and PRS may only consider $4,500 ($5,000 × .90) of the certified net operating loss. After consideration of the certified loss, PRS owes 1446 tax in the amount of $43.75 for the first installment period ($5,000 estimated allocable ECTI less $4,500 (certified loss as limited under paragraph (c)(1)(i)(C)) × .35 (1446 tax applicable percentage) × .25 (section 6655(e)(2)(B) percentage for the first installment period)). See §1.1446–3(b)(2). Pursuant to paragraph (d)(3) of this section, PRS must attach a copy of NRA's certificate and the computation of 1446 tax due with respect to NRA to the Form 8813 filed with respect to NRA.

(iii) PRS's estimate of ECTI allocable to NRA for the second installment period remains unchanged from the first installment period. On June 10, year 8, NRA provides PRS an updated certificate reporting that NRA now reasonably expects to have an effectively connected net operating loss of $4,000 available to offset its allocable share of ECTI from PRS in year 4. NRA provided the updated certificate within 10 days of filing its U.S. income tax return for the year 7 taxable year, as required by paragraph (c)(2)(ii)(B) of this section. Provided the updated certificate is otherwise valid, PRS may rely on the updated certificate for the second installment period (due date June 15, year 8). Even if the updated certificate were not valid, PRS could no longer rely on the original certificate.

(iv) Under paragraph (d) of this section, PRS is not relieved from liability for the 1446 tax due with respect to NRA under section 1461 if it relies on a certificate determined to be defective, or if it receives an updated certificate reporting an amount of deductions and losses less than the amount reported on the superseded certificate. Under the principles of section 6655 (as applied through §1.1446–3), PRS is required to have paid 50-percent of the annualized 1446 tax due with respect to NRA on or before the due date of the second installment period (section 6655(e)(2)(B) percentage for the second installment period). Under paragraph (c)(2)(ii)(B) of this section, because NRA's updated certificate is valid for the second installment period, if PRS considers a certificate for that period it must consider the updated certificate. Under paragraph (c)(1)(i)(C) of this section, PRS can only consider $3,600 ($4,000 × .90) of NRA's updated effectively connected net operating loss. Assuming PRS

considers NRA's updated certificate for the second installment period, PRS must have paid a total of $245 of 1446 tax with respect to the ECTI estimated to be allocable to NRA as of the second installment due date ($1,400 ($5,000 ECTI less $3,600 net operating loss deduction) × .35 (withholding tax rate) × .50 (section 6655(e)(2)(B) percentage for the second installment period)). After considering PRS's payment of 1446 tax for the first installment period, PRS is required to pay $201.25 for the second installment period ($245 less previous payment of $43.75). See § 1.1446–3(b)(2). Further, if PRS considers NRA's updated certificate for the second installment period, when PRS files Form 8813 it must attach the updated certificate along with PRS's computation of 1446 tax due with respect to NRA.

(v) Under paragraph (d) of this section, PRS is not liable for the addition to the tax under section 6655 (as applied through § 1.1446–3) for the first installment period because PRS reasonably relied on NRA's certificate of losses for that period.

(vi) Assume that PRS's estimate of its ECTI allocable to NRA for the third and fourth installment periods is the same as for the first and second installment periods. Assume PRS may reasonably rely on NRA's updated certificate in calculating its payment of 1446 tax for the third and fourth installment periods. The third installment of 1446 tax would be $122.50 (($5,000 − $3,600) × .35 × .75 = $367.50 − $245 (total previous payments)). The fourth installment of 1446 tax would be $122.50 (($5,000 − $3,600) × .35 × 1.00 = $490 − $367.50 (total previous payments)). See § 1.1446–3(b)(2). PRS must attach to each Form 8813 a computation of the 1446 tax due with respect to NRA that takes into account the amount of effectively connected net operating loss reported on NRA's updated certificate.

(vii) Because NRA's certified net operating loss has not changed for the third and fourth installments, in lieu of attaching NRA's certificate, PRS may attach a statement containing NRA's name, TIN, and the certified net operating loss amount. However, PRS must attach NRA's certificate and a computation of the 1446 tax due with respect to NRA that takes into account NRA's certified net operating loss to the Form 8805 filed with respect to NRA. See paragraph (d)(3) of this section.

Example 5. IRS determines in subsequent taxable year that partner's certificate is defective because partner failed to timely file a U.S. income tax return. NRA and B form a partnership (PRS) in year 1 to conduct a trade or business in the United States. NRA and B provide PRS appropriate documentation under § 1.1446–1 to establish their status for purposes of section 1446. In year 4, NRA timely submits a certificate under this section (using Form 8804–C) to be considered by PRS for its first installment period. The certificate reports that NRA reasonably expects to have an effectively connected net operating loss of $5,000 available to offset its allocable share of ECTI from PRS in year 4. Further, the certificate contains all of the necessary representations required under this section. PRS estimates for each installment period that NRA's allocable share of ECTI will be $5,000 for the taxable year. PRS's actual operating results for the year result in $5,000 of ECTI allocable to NRA.

(i) PRS reasonably relies on (within the meaning of paragraph (a)(2) of this section) NRA's certificate when computing each installment payment during year 4 and the 1446 tax due on Form 8804 and appropriately considers the limitation in paragraph (c)(1)(i)(C) of this section. As a result, PRS paid $175 of 1446 tax on behalf of NRA for the taxable year ($5,000 of ECTI less $4,500 net operating loss deduction × .35 applicable percentage). As required under paragraph (d) of this section, PRS attached the certificate to the Form 8813 for the first installment period and the Form 8805 for year 4. Because NRA did not submit an updated certificate to PRS in year 4, PRS attached to the Forms 8813 for the second, third and fourth installment periods a statement containing NRA's name, TIN, and the certified net operating loss as well as the computation of 1446 tax due with respect to NRA reflecting the amount of net operating loss considered.

(ii) In year 5, NRA timely submits to PRS a certificate under this section to be considered for the first installment period. The certificate represents that NRA reasonably expects to have an effectively connected net operating loss of $5,000 available to offset its allocable share of ECTI from PRS in year 5. For the first installment period, PRS estimates that NRA's allocable share of partnership ECTI is $5,000. PRS reasonably relies on the certificate for the first installment period and determines that it is required to make a 1446 tax installment payment of $43.75 ($5,000 allocable ECTI less $4,500 (certified net operating loss as limited under paragraph (c)(1)(i)(C) of this section) × .35 (1446 tax applicable percentage) × .25 (section 6655(e)(2)(B) percentage for the first installment period)). See § 1.1446–3(b)(2). PRS makes the installment payment with the Form 8813 filed for the first installment period, and complies with paragraph (d)(3) of this section by attaching NRA's certificate and the computation of 1446 tax due with respect to NRA to the Form 8813.

(iii) The IRS provides written notification to PRS on June 1, year 5, (pursuant to paragraph (c)(3) of this section) that the certificate received from NRA in year 4 is defective because NRA failed to file a qualifying U.S. income tax return (within the meaning of paragraph (b)(2)(iii) of this section) for one of the preceding taxable years as required

under paragraph (b)(1) of this section. The notice further states that PRS is not to rely on any certificate received from NRA in year 5.

(iv) Under paragraph (d)(2)(ii) of this section, because the certificate submitted by NRA in year was determined to be defective for a reason other than the amount or character of the certified deductions and losses, under section 1461 PRS is fully liable for the 1446 tax due with respect to NRA's allocable share of ECTI year 4 without regard to the certificate. The total 1446 tax due for year 4 without regard to the certificate is $1,750 ($5,000 ECTI × .35) and PRS paid $175 of 1446 tax in year 4. Therefore, PRS owes $1,575 of 1446 tax. However, PRS may be deemed to have paid the outstanding 1446 tax due if NRA paid all of its U.S. tax due in year 4. See § 1.1446–3(e).

(v) However, because PRS did not have actual knowledge or reason to know that the certificate NRA submitted in year 4 was defective, PRS reasonably relied on the certificate for purposes of paragraph (d)(2) of this section. Therefore, PRS is not liable for an addition to the tax with respect to its underpayment of 1446 tax under the principles of section 6655 (as applied through § 1.1446–3) for any installment period in year 4.

(vi) However, PRS is generally liable for interest under section 6601 and for the failure to pay addition to tax under section 6651(a)(2) on the $1,575 of 1446 tax due for year 4 for the period from April 15, year 5 (last date prescribed for payment of 1446 tax) to the date PRS pays the 1446 tax or is deemed to have paid the 1446 tax under § 1.1446–3(e).

(vii) With respect to the year 5, PRS reasonably relied on NRA's certificate when computing its first installment payment (due on April 15, year 5). Therefore, in accordance with paragraph (d)(2)(i) of this section, PRS will not be liable for an addition to the tax under the principles of section 6655 (as applied through § 1.1446–3) for the first installment period. However, because the IRS provided written notification to PRS on June 1, year 5, to disregard any certificate received from NRA for year 5, PRS may not rely on any certificate received from NRA certificate (or any new certificate provided by NRA) when it computes its second installment payment in year 5. PRS is not permitted to consider any certificate submitted by NRA until the IRS provides written notification to PRS revoking or modifying the original notice. PRS's second installment payment in year 5 must include the additional amount of 1446 tax it would have paid for the first installment period without regard to the certificate received from NRA.

Example 6. IRS determines in subsequent taxable year that partner's certificate is defective because partner's actual losses are less than amount certified and considered by the partnership. Assume the same facts as in *Example 5,* except that the IRS determines that NRA's certificate submitted in year 4 is defective because the actual effectively connected net operating loss available to NRA for year 4 was $1,000 rather than the $5,000 certified.

(i) Under paragraph (d)(2)(ii) of this section, PRS is not relieved from its liability for 1446 tax under section 1461 when it relies on a certificate of losses from a foreign partner that is later determined to be defective. However, when the IRS determines that a partner's certificate is defective because of the amount of the certified deductions and losses, the partnership is liable for the 1446 tax, interest, additions to tax, and penalties to the extent the amount of certified deductions and losses taken into account when computing 1446 tax (or, unless there was reasonable reliance on the certificate, any installment of such tax) is greater than the actual amount of available deductions and losses. Here, PRS considered the certified deductions and losses in the amount of $4,500. The IRS subsequently determined that NRA only had $1,000 of actual losses, only $900 of which were permitted to be considered under paragraph (c)(1)(i)(C) of this section. Accordingly, PRS is liable for the 1446 tax due with respect to the portion of the overstated losses that it considered when computing its 1446 tax. The remaining 1446 tax due for year 4 is $1,260 ($3,600 ($4,500 less $900) of excess losses considered × .35). However, PRS may be deemed to have paid the $1,260 of 1446 tax under § 1.1446–3(e) if NRA has paid all of NRA's U.S. income tax.

(ii) If PRS had considered only $900 (or a lesser amount) of NRA's certified net operating loss when computing and paying its 1446 tax during year 4 then, under paragraph (d)(2)(iii) of this section, PRS would not be liable for 1446 tax because it did not consider a net operating loss greater than the amount actually available to NRA.

Example 7. Partner with different taxable year than partnership. PRS partnership has two equal partners, FC, a foreign corporation, and DC, a domestic corporation. PRS conducts a trade or business in the United States and generates effectively connected income. FC maintains a June 30 fiscal taxable year end, while DC and PRS maintain a calendar taxable year end. FC and DC provide a valid Form W–8BEN and Form W–9, respectively, to PRS. FC and DC are the only persons that have ever been partners in PRS. For its year 1 through year 3 taxable years, PRS issued Forms 1065 (Schedule K–1) reporting in the aggregate $100 of net loss to each partner. For its year 4 taxable year, PRS issued Forms 1065 (Schedule K–1) to its partners reporting $150 of loss to each partner. All of the losses reported on the Forms 1065 (Schedule K–1) are effectively connected to PRS's and FC's trade or business in the United States.

(i) Assume that FC submits a valid certificate under this section certifying losses to the partnership for the partnership's year 5 taxable year. Further, assume that FC's only source of effectively connected income, gain, deduction, or loss is the activity of PRS.

(ii) For PRS's first installment period in year 5, FC may only certify deductions and losses under this section in the amount of $100 (the losses as reported on the Forms 1065 (Schedule K–1) issued for PRS's year 1 through 3 taxable years). Under section 706, the taxable income of a partner shall include the income, gain, loss, deduction, or credit of the partnership for the partnership taxable year ending within or with the taxable year of the partner. PRS's year 4 calendar taxable year ends during FC's fiscal taxable year ending June 30, year 5. Therefore, under paragraph (c)(1) of this section, as of April 15, year 5 (the last date FC may submit its first certificate under paragraph (c) of this section to have it considered for PRS's first installment due date of April 15, year 5), FC's allocable share of the PRS losses for years 1 through 3 are the only losses that FC can represent have been or will be reported on an FC U.S. income tax return filed for a taxable year ending prior to such installment due date.

(iii) The result in paragraph (ii) of this *Example 7* is the same for the year 5 second installment period, the due date of which is June 15, year 5.

(iv) FC may submit an updated certificate under this section after June 30, year 5, which includes the $150 loss for year 4. PRS may consider such an updated certificate for its third installment period (due date September 15, year 5), provided the updated certificate is received by the due date for such installment in accordance with paragraph (c) of this section.

Example 8. Failure to provide status update with respect to prior year unfiled returns. FC, a foreign corporation, and DC, a domestic corporation, form a partnership (PRS) to conduct a trade or business in the United States. FC and DC provide PRS appropriate documentation under §1.1446–1 to establish their status for purposes of section 1446. FC and DC are equal partners in PRS, and all partnership items are allocated equally between FC and DC.

(i) In the current taxable year FC submits a certificate under this section using Form 8804–C prior to PRS's first installment due date. FC represents that it has filed or will file a qualifying U.S. income tax return (within the meaning of paragraph (b)(2)(iii) of this section) in each of the preceding three taxable years. FC specifies that it has not filed its U.S. income tax return for the immediately preceding taxable year. FC also represents that it will timely file its U.S. income tax return for the partnership taxable year during which the certificate is considered (and will timely pay all tax due with such return). Assume all other requirements under paragraph (c) of this section are met for FC's certificate to be valid.

(ii) Provided that PRS does not possess actual knowledge or reason to know that FC's certificate is defective under paragraph (a)(2) of this section, PRS may reasonably rely on FC's certificate for its first, second, and third installment payments.

(iii) If FC does not submit to PRS either an updated certificate or a status update as required by paragraph (c)(2)(ii)(B)(*1*) of this section by December 15th (PRS's final installment due date), PRS must disregard FC's certificate when computing its fourth installment payment of 1446 tax and when completing its Form 8804 for the taxable year. PRS's payment of 1446 tax for its fourth installment period must include the additional amount of 1446 tax it would have paid in the first, second and third installment periods had it not considered FC's certificate. Further, even if the status update is provided by December 15th, PRS may only rely on the certificate if the status update does not contradict the original certificate and such update indicates that the immediately preceding year's return will be timely filed. Finally, even if the status update is provided by December 15th, FC must also submit an updated certificate to the partnership in accordance with paragraph (c) of this section within 10 days of the date FC timely files its U.S. income tax return for the preceding taxable year.

Example 9. Partnership consideration of certified deductions and losses or de minimis certificate. For purposes of this example assume paragraph (c)(1)(ii) of this section may apply. On January 1, year 4, NRA and B form a partnership (PRS) to conduct a trade or business in the United States. NRA and B are equal partners in PRS and all partnership items are shared equally. NRA and B provide PRS appropriate documentation under §1.1446–1 to establish their status for purposes of section 1446. During years 1 through 3, NRA's only activity generating effectively connected items was an interest in partnership XYZ. XYZ allocated NRA a loss for all three years. NRA filed qualifying U.S. income tax returns (within the meaning of paragraph (b)(2)(iii) of this section) reporting its allocable share of losses from XYZ in years 1 through 3. The XYZ partnership dissolved on December 31, year 3.

(i) In year 4, NRA's only activity giving rise to effectively connected income, gain, deduction, or loss is its interest in PRS. NRA submits to PRS a valid certificate (using Form 8804–C) certifying under paragraph (c)(1)(i) its effectively connected net operating losses from years 1 through 3 and under (c)(1)(ii) of this section that its only activity giving rise to effectively connected income, gain, deduction, or loss for the PRS taxable

year that ends with or within its taxable year is (and will be) its investment in PRS.

(ii) During year 4, PRS allocates ECTI to NRA. If the 1446 tax otherwise due on the annualized amount allocated to NRA is less than $1,000, determined without regard to any deductions and losses certified by NRA under paragraph (c)(1)(i) of this section, PRS may consider the certificate received from NRA under paragraph (c)(1)(ii) of this section and not pay 1446 tax (or any installment of such tax) with respect to NRA. Alternatively, PRS may consider the deductions and losses certified by NRA under paragraph (c)(1)(i) of this section.

(iii) Regardless of whether PRS considers NRA's certification under paragraph (c)(1)(i) or (c)(1)(ii) of this section in computing its 1446 tax due with respect to NRA, PRS must file Form 8813 for all installment periods as well as a Form 8805 for NRA with its Form 8804. If PRS considers NRA's certification under paragraph (c)(1)(i) or (c)(1)(ii) of this section, PRS must attach to each Form 8813, as well as to the Form 8805, a computation of the 1446 tax with respect to NRA that takes into account its consideration of NRA's certificate. In addition, PRS must attach NRA's certificate to the Form 8813 for the first installment period it considers the certificate, as well as to the Form 8805. For all subsequent installment periods, PRS may attach a statement containing NRA's name, and TIN. If PRS is relying on NRA's certified losses under paragraph (c)(1)(i) of this section, the statement must indicate the amount of losses and deductions NRA certified. If PRS is relying on NRA's certification under paragraph (c)(ii) of this section, the statement must indicate that it is relying on NRA meeting the requirements under paragraph (c)(1)(ii) of this section and the 1446 tax on the annualized amount allocated to NRA is less than $1,000. See paragraph (d)(3)(i) of this section.

Example 10. Application of transition rule. NRA and B form a partnership (PRS) on January 1, 2004, to conduct a trade or business in the United States. NRA and B are equal partners in PRS and all partnership items are shared equally. NRA and B provide PRS appropriate documentation under §1.1446–1 to establish their status for purposes of section 1446. For its 2004 through 2007 tax years, PRS issued Forms 1065 (Schedule K–1) to NRA and B reporting a $1,000 net loss from its U.S. trade or business to each partner for each year (for an aggregate loss of $4,000 per partner). During the 2004 through 2007 tax years, NRA's only activity generating effectively connected items was its investment in PRS.

(i) On February 10, 2008, NRA submitted a certificate to PRS, reporting its aggregate $4,000 effectively connected loss to PRS, that met the requirements of §1.1446–6T(c) (See 26 CFR Part 1, revised as of April 1, 2007), as in effect before January 1, 2008. The certificate stated that NRA had timely filed its U.S. income tax returns for the 2004, 2005 and 2006 tax years, and that it would timely file a U.S. income tax return for its 2007 tax year. For the first and second installments period in 2008, PRS estimates that it will earn ECTI of $10,000.

(ii) Because the certificate submitted by NRA to PRS on February 10, 2008, met the requirements of §1.1446–6T (See 26 CFR Part 1, revised as of April 1, 2007), as in effect before January 1, 2008, PRS may consider such certificate when computing its 1446 tax due for the first and second installment period even if the certificate does not meet all the requirements of paragraph (c) of this section.

(iii) NRA timely files its U.S. income tax return for the 2007 tax year on July 24, 2008. In accordance with paragraph (c)(2)(ii)(B)(*1*) of this section, within 10 days of filing such return NRA prepares an updated certificate to be submitted to PRS certifying that it reasonably expects to have only $3,500 of losses available to reduce its allocable share of ECTI from PRS. Because the updated certificate will be submitted after July 28, 2008, to be valid the updated certificate must meet the requirements of paragraph (c) this section.

(f) *Effective/Applicability date.* Except as otherwise provided in this paragraph (f), the rules of this section are applicable for partnership taxable years beginning after December 31, 2007. The rules of paragraphs (b)(3)(i)(B) through (D) shall apply to partnership taxable years beginning after July 28, 2008.

(g) *Transition rule.* A certificate that met the requirements of §1.1446–6T(c) (See 26 CFR Part 1, revised as of April 1, 2007), as in effect before January 1, 2008, submitted on or before July 28, 2008 by a partner that met the requirements of §1.1446–6T(b) (See 26 CFR Part 1, revised as of April 1, 2007), as in effect before January 1, 2008, shall not be considered defective because it does not meet the requirements of this section. However, any certificate (including any updated certificates and status updates) submitted, or required to be submitted, under paragraph (c) of this section after July 28, 2008, must meet the requirements of this section. See paragraph (e)(2) *Example 10* of this section.

[T.D. 9394, 73 FR 23085, Apr. 29, 2008, as amended at 74 FR 14931, Apr. 2, 2009]

§1.1446–7 Effective/Applicability date..

Sections 1.1446–1 through 1.1446–5 shall apply to partnership taxable

years beginning after May 18, 2005. However, a partnership may elect to apply all of the provisions of §§ 1.1446–1 through 1.1446–5 to partnership taxable years beginning after December 31, 2004. A partnership shall make the election under this section by complying with the provisions of §§ 1.1446–1 through § 1.1446–5 and attaching a statement to the Form 8804 or Form 1042 annual return, filed for the taxable year in which the regulation provisions first apply, that indicates that the partnership is making the election under this section. The revisions to §§ 1.1446–3(b)(2), 1.1446–3(b)(3)(i)(A) and 1.1446–5(c)(2) contained in the final regulations published in 2008 apply to partnership taxable years beginning after December 31, 2007. See § 1.1446–6(f) and (g) for the Effective/Applicability date and Transition rule for § 1.1446–6.

[T.D. 9200, 70 FR 28717, May 18, 2005, as amended by T.D. 9394, 73 FR 23085, Apr. 29, 2008]

TAX-FREE COVENANT BONDS

§ 1.1451–1 Tax-free covenant bonds issued before January 1, 1934.

(a) *Rates of withholding*—(1) *Rate of 2 percent*. Withholding of a tax equal to 2 percent is required in the case of interest upon bonds or other corporate obligations containing a tax-free covenant and issued before January 1, 1934, paid to an individual, a fiduciary, or a partnership, whether resident or nonresident, or to a nonresident foreign corporation, regardless of whether the liability assumed by the obligor is less than, equal to, or greater than 2 percent.

(2) *Rate of 30 percent*. Notwithstanding subparagraph (1) of this paragraph, if the liability assumed by the obligor does not exceed 2 percent of the interest, withholding is required at the rate of 30 percent in the case of payments to a nonresident alien individual, a nonresident partnership composed in whole or in part of nonresident aliens, a nonresident foreign corporation, or an owner who is unknown to the withholding agent.

(3) *Obligations of resident payers*. The rates of withholding specified in subparagraphs (1) and (2) of this paragraph are applicable to interest on such tax-free covenant bonds issued by a domestic corporation or by a resident foreign corporation.

(4) *Obligations of nonresident payers*. A nonresident foreign corporation having a fiscal or paying agent in the United States is required to withhold a tax of 2 percent in the case of interest upon its tax-free covenant bonds issued before January 1, 1934, which is paid to an individual or fiduciary who is a citizen or resident of the United States, to a partnership any member of which is a citizen or resident, or to an unknown owner.

(5) *Interest from sources without the United States*. Withholding is not required under section 1451 in the case of interest upon bonds or other corporate obligations issued before January 1, 1934, and containing a tax-free covenant if the interest is not to be treated as income from sources within the United States and the payments are made to a nonresident alien, a partnership composed wholly of nonresident aliens, or a nonresident foreign corporation.

(6) *Tax treaties*. The rates of tax to be withheld in accordance with this paragraph shall be reduced as may be provided by treaty with any country. See section 894 and § 1.1441–6 relating to income subject to a reduced rate of, or an exemption from, income tax pursuant to an income tax convention.

(b) *Date of issue*. The withholding provisions of section 1451 are applicable only to bonds, mortgages, or deeds of trust, or other similar obligations of a corporation which were issued before January 1, 1934, and which contain a tax-free covenant. For the purpose of section 1451, bonds, mortgages, or deeds of trust, or other similar obligations of a corporation, are issued when delivered. If a broker or other person acts as selling agent of the obligor, the obligation is issued when delivered by the agent to the purchaser. If a broker or other person purchases the obligation outright for the purpose of holding or reselling it, the obligation is issued when delivered to such broker or other person.

(c) *Extended maturity date*. In cases where on or after January 1, 1934, the maturity date of bonds or other obligations of a corporation is extended, the

bonds or other obligations shall be considered to have been issued on or after January 1, 1934. The interest on such obligations is not subject to the withholding provisions of section 1451 but falls within the class of interest described in section 1441. See paragraph (c)(5)(iii) of § 1.1441–3.

(d) *Covenant in trust deed.* Bonds issued under a trust deed containing a tax-free covenant are treated as if they contain such a covenant. If neither the bonds nor the trust deeds given by the obligor to secure them contained a tax-free covenant, but the original trust deeds were modified before January 1, 1934, by supplemental agreements containing a tax-free covenant executed by the obligor corporation and the trustee, the bonds issued before January 1, 1934, are subject to the provisions of section 1451, provided appropriate authority existed for the modification of the trust deeds in this manner. The authority must have been contained in the original trust deeds or actually secured from the bondholders.

(e) *Notation showing date of issue.* In order that the date of issue of bonds, mortgages, deeds of trust, or other similar corporate obligations containing a tax-free covenant may be readily determined by the owner for the purpose of preparing the ownership certificates required by § 1.1461–1, the issuing or debtor corporation shall indicate the date of issue by an appropriate notation, or use the phrase ''issued on or after January 1, 1934,'' on each such obligation or in a statement accompanying the delivery of the obligation.

(f) *Effect of withholding on income taxes of bondholder and issuing corporation*—(1) *Federal tax.* In the case of corporate bonds or other corporate obligations issued before January 1, 1934, and containing a tax-free covenant, the corporation paying a Federal tax, or any part of it, for someone else pursuant to its agreement is not entitled to deduct such payment from its gross income on any ground; nor shall the tax so paid be included in the gross income of the bondholder. The amount of the tax so paid may, nevertheless, be claimed by the bondholder in accordance with paragraph (a) of § 1.1462–1 as a credit against the total amount of income tax due. See also section 32. The tax so paid by the corporation upon tax-free covenant bond interest payable to a domestic or resident fiduciary and allocable to any nonresident alien beneficiary under section 652 or 662 is allowable, pro rata, as a credit against:

(i) The tax required to be withheld by the fiduciary in accordance with paragraph (f) of § 1.1441–3 from the income of the beneficiary, and

(ii) The total income tax computed in the return of the beneficiary, as indicated in paragraph (a) of § 1.1462–1.

(2) *State taxes.* In the case of corporate bonds or other obligations containing an appropriate tax-free covenant, the corporation paying for someone else, pursuant to its agreement, a State tax or any tax other than a Federal tax may deduct such payment as interest paid on indebtedness.

(g) *Alien resident of Puerto Rico.* For purposes of this section the term ''nonresident alien individual'' includes an alien resident of Puerto Rico.

(h) *Other rules for withholding of tax under section 1451.* The rules for withholding stated in paragraphs (c) (2) and (3), (f), and (g) of § 1.1441–3 shall also apply for purposes of withholding the tax under this section.

[T.D. 6500, 25 FR 12076, Nov. 26, 1960, as amended by T.D. 7157, 36 FR 25228, Dec. 30, 1971]

§ 1.1451–2 Exemptions from withholding under section 1451.

(a) *Claiming personal exemptions.* Withholding under § 1.1451–1 from interest on bonds or other obligations of corporations issued before January 1, 1934, and containing a tax-free covenant shall not be required if there is filed with the withholding agent when presenting coupons for payment, or not later than February 1 of the following year, an ownership certificate on Form 1000 stating:

(1) In the case of a citizen or resident of the United States, that his taxable income does not exceed his deductions for personal exemptions allowed under section 151; or

(2) In the case of an estate or trust the fiduciary of which is a citizen or resident of the United States, that its

taxable income does not exceed the deduction for the personal exemption allowed under section 642(b).

(b) *Claiming residence in United States.* To claim residence in the United States for purposes of section 1451, see § 1.1441–5.

(c) *Other exemptions.* The exemptions allowed by paragraphs (d) and (h) of § 1.1441–4 shall also apply for purposes of section 1451.

[T.D. 6500, 25 FR 12077, Nov. 26, 1960, as amended by T.D. 6908, 31 FR 16774, Dec. 31, 1966]

APPLICATION OF WITHHOLDING PROVISIONS

§ 1.1461–1 Payment and returns of tax withheld.

(a) *Payment of withheld tax*—(1) *Deposits of tax.* Every withholding agent who withholds tax pursuant to chapter 3 of the Internal Revenue Code (Code) and the regulations under such chapter shall deposit such amount of tax as provided in § 1.6302–2(a). If for any reason the total amount of tax required to be returned for any calendar year pursuant to paragraph (b) of this section has not been deposited pursuant to § 1.6302–2, the withholding agent shall pay the balance of tax due for such year at such place as the Internal Revenue Service (IRS) shall specify. The tax shall be paid when filing the return required under paragraph (b)(1) of this section for such year, unless the IRS specifies otherwise. With respect to withholding under section 1446, this section shall only apply to publicly traded partnerships. See § 1.1461–3 for penalties applicable to partnerships that fail to withhold under section 1446 on effectively connected taxable income allocable to foreign partners. The previous two sentences shall apply to partnership taxable years beginning after May 18, 2005, or such earlier time as the regulations under §§ 1.1446–1 through 1.1446–5 apply by reason of an election under § 1.1446–7.

(2) *Penalties for failure to pay tax.* For penalties and additions to the tax for failure to timely pay the tax required to be withheld under chapter 3 of the Code, see sections 6656, 6672, and 7202 and the regulations under those sections.

(b)(1) [Reserved] For further guidance, see § 1.1461–1T(b)(1).

(2) *Amended returns.* An amended return may be filed on a Form 1042 or such other form as the IRS may prescribe. An amended return must include such information as the form or accompanying instructions shall require, including, with respect to any information that has changed from the time of the filing of the return, the information that was shown on the original return and the corrected information.

(c)(1)(i) and (ii) [Reserved] For further guidance, see § 1.1461–1T(c)(1)(i) and (ii).

(2) *Amounts subject to reporting*—(i) *In general.* Subject to the exceptions described in paragraph (c)(2)(ii) of this section, amounts subject to reporting on Form 1042–S are amounts paid to a foreign payee or partner (including persons presumed to be foreign) that are amounts subject to withholding as defined in § 1.1441–2(a) or § 1.1446–4(a) (addressing publicly traded partnerships required to pay withholding tax under section 1446 on distributions of effectively connected income). The reference in the previous sentence to withholding under § 1.1446–4 shall apply to partnership taxable years beginning after May 18, 2005, or such earlier time as the regulations under §§ 1.1446–1 through 1.1446–5 apply by reason of an election under § 1.1446–7. Amounts subject to reporting include amounts subject to withholding even if no amount is deducted and withheld from the payment because of a treaty or Internal Revenue Code exception to taxation or because an amount withheld was reimbursed to the payee under the adjustment procedures of § 1.1461–2. In addition, amounts subject to reporting include any amounts paid to a foreign payee on which a withholding agent withheld an amount (either under chapter 3 of the Internal Revenue Code or section 3406) whether or not the amount is subject to withholding. Amounts subject to reporting include, but are not limited to, the following items—

(A) The entire amount of a corporate distribution (whether actual or deemed) irrespective of any estimate of

the portion of the distribution that represents a taxable dividend;

(B) Interest, including the portion of a notional principal contract payment that is characterized as interest. Interest shall also be reported on Form 1042-S if it is bank deposit interest paid to nonresident alien individuals as required under § 1.6049–8;

(C) Rents;

(D) Royalties;

(E) Compensation for dependent and independent personal services performed in the United States;

(F) Annuities;

(G) Pension distributions and other deferred income;

(H) Gambling winnings that are not exempt from tax under section 871(j);

(I) Income from the cancellation of indebtedness unless the withholding agent is unrelated to the debtor and does not have knowledge of the facts that give rise to the payment (see § 1.1441–2(d));

(J) Amounts that are (or are presumed to be) effectively connected with the conduct of a trade or business in the United States (including deposit interest as defined in sections 871(i)(2)(A) and 881(d)) even if no withholding certificate is required to be furnished by the payee or beneficial owner. In the case of amounts paid on a notional principal contract described in § 1.1441–4(a)(3) that are presumed to be effectively connected with the conduct of a trade or business in the United States, the amount required to be reported is limited to the amount of cash paid from the notional principal contract;

(K) Scholarship, fellowship, or grant income and compensation for personal services that is not excludible from gross income under section 117 (whether or not the taxable scholarship, fellowship, grant income, or compensation for personal services is exempt from tax under an income tax treaty) paid to foreign students, trainees, teachers, or researchers;

(L) Dividend equivalents as described in section 871(m) and the regulations thereunder;

(M) Amounts paid to foreign governments, international organizations, or the Bank for International Settlements, whether or not documentation must be provided; and

(N) Original issue discount paid on the redemption of an OID obligation. The amount to be reported is the amount of OID includible in the gross income of the holder of the obligation, if known, or, if not known, the total amount of original issue discount determined as if the holder held the obligation from its original issuance. A withholding agent may determine the total amount of OID by using the most recently published ''List of Original Issue Discount Instruments,'' (Publication 1212, available from the IRS Forms Distribution Centers).

(ii) *Exceptions to reporting*. The amounts listed in this paragraph (c)(2)(ii) are not required to be reported on Form 1042–S—

(A) Interest (including original issue discount) that is deposit interest under sections 871(i)(2)(A) and 881(d) and that is not effectively connected with the conduct of a trade or business in the United States, unless reporting is required under § 1.6049–8 (regarding payments to certain foreign residents) or is interest that is effectively connected with the conduct of a trade or business in the United States;

(B) Interest or original issue discount on certain short-term obligations, described in section 871(g)(1)(B) or 881(a)(3);

(C) Interest paid on obligations sold between interest payment dates and the portion of the purchase price of an OID obligation that is sold or exchanged in a transaction other than a redemption, unless the sale or exchange is part of a plan, the principal purpose of which is to avoid tax and the withholding agent has actual knowledge or reason to know of such plan (see § 1.1441–2(a)(5) and (6));

(D) Any item required to be reported on a Form W-2, including an item required to be shown on Form W-2 solely by reason of § 1.6041–2 (relating to return of information for payments to employees) or § 1.6052–1 (relating to information regarding payment of wages in the form of group-term life insurance);

(E) [Reserved] For further guidance, see § 1.1.461–1T(c)(2)(ii)(E).

(F) Amounts paid on a notional principal contract described in §1.1441–4(a)(3)(i) that are not effectively connected with the conduct of a trade or business in the United States (or not treated as effectively connected pursuant to §1.1441–4(a)(3)(ii));

(G) Amounts required to be reported on Form 8288 (U.S. Withholding Tax Return for Dispositions by Foreign Persons of U.S. Real Property Interests) or Form 8804 (Annual Return for Partnership Withholding Tax (section 1446)). A withholding agent that must report a distribution partly on a Form 8288 or 8804 and partly on a Form 1042–S may elect to report the entire amount on a Form 8288 or 8804;

(H) and (I) [Reserved] For further guidance, see §1.1.461–1T(c)(2)(ii)(H) and (I).

(J) Gain described in section 301(c)(3); and

(K) Amounts described in §1.1441–1(b)(4)(xviii) (dealing with certain amounts paid by the U.S. government).

(iii) *Effective/applicability date.* Paragraph (c)(2)(i)(L) of this section applies on or after January 23, 2012.

(3) *Required information.* The information required to be furnished under this paragraph (c)(3) shall be based upon the information provided by or on behalf of the recipient of an amount subject to reporting (as corrected and supplemented based on the withholding agent's actual knowledge) or the presumption rules of §§1.1441–1(b)(3), 1.1441–4(a), 1.1441–5(d) and (e), 1.1441–9(b)(3), 1.1446–1(c)(3) (as applied to publicly traded partnerships required to pay tax under section 1446 on distributions of effectively connected income) or 1.6049–5(d). The reference in the previous sentence to presumption rules applicable to withholding under section 1446 shall apply to partnership taxable years beginning after May 18, 2005, or such earlier time as the regulations under §§1.1446–1 through 1.1446–5 apply by reason of an election under §1.1446–7. The Form 1042–S must include the following information, if applicable—

(i) [Reserved] For further guidance, see §1.1461–1T(c)(3)(i).

(ii) A description of each category of income paid based on the income codes provided on the form (e.g., interest, dividends, royalties, etc.) and the aggregate amount in each category expressed in U.S. dollars;

(iii) [Reserved] For further guidance, see §1.1461–1T(c)(3)(iii).

(iv) The name and address of the recipient;

(v) The name and address of any nonqualified intermediary, flow-through entity, or U.S. branch as described in §1.1441–1(b)(2)(iv) (other than a branch that is treated as a U.S. person) to which the payment was made;

(vi) The taxpayer identifying number of the recipient if required under §1.1441–1(e)(4)(vii) or if actually known to the withholding agent making the return;

(vii) The taxpayer identifying number of a nonqualified intermediary or flow-through entity (to the extent it is not a recipient) or other flow-through entity to the extent it is known to the withholding agent;

(viii) The country (based on the country codes provided on the form) of the recipient and of any nonqualified intermediary or flow-through entity the name of which appears on the form; and

(ix) Such information as the form or the instructions may require in addition to, or in lieu of, information required under this paragraph (c)(3).

(4) *Method of reporting*—(i) [Reserved] For further guidance, see §1.1461–1T(c)(4)(i).

(ii) *Payments made by U.S. withholding agents to persons that are not recipients*—(A) [Reserved] For further guidance, see §1.1461–1T(c)(4)(ii)(A).

(B) *Disregarded entities.* If a U.S. withholding agent makes a payment to a disregarded entity but receives a valid withholding certificate or other documentary evidence from a foreign person that is the single owner of a disregarded entity, the withholding agent must file a Form 1042–S treating the foreign single owner as the recipient. The taxpayer identifying number on the Form 1042–S, if required, must be the foreign single owner's TIN.

(iii) *Reporting by qualified intermediaries, withholding foreign partnerships, and withholding foreign trusts.* A qualified intermediary, a withholding foreign partnership, and a withholding foreign trust shall report payments on

Form 1042–S as provided in their agreements with the IRS and the instructions to the form.

(iv) [Reserved] For further guidance, see § 1.1461–1T(c)(4)(iv).

(v) [Reserved] For further guidance, see § 1.1461–1T(c)(4)(v).

(vi) *Other withholding agents.* Any person that is a withholding agent not described in paragraph (c)(4)(i), (iii), or (iv) of this section (e.g., a foreign person that is not a qualified intermediary, flow-through entity, or U.S. branch) shall file Form 1042–S in the same manner as a U.S. withholding agent and in accordance with the instructions to the form.

(5) [Reserved] For further guidance, see § 1.1461–1T(c)(5).

(d) *Report of taxpayer identifying numbers.* When so required under procedures that the IRS may prescribe in published guidance (see § 601.601(d)(2) of this chapter), a withholding agent must attach to the Form 1042 a list of all the taxpayer identifying numbers (and corresponding names) that have been furnished to the withholding agent and upon which the withholding agent has relied to grant a reduced rate of withholding and that are not otherwise required to be reported on a Form 1042–S under the provisions of this section.

(e) *Indemnification of withholding agent.* A withholding agent is indemnified against the claims and demands of any person for the amount of any tax it deducts and withholds in accordance with the provisions of chapter 3 of the Code and the regulations under that chapter. A withholding agent that withholds based on a reasonable belief that such withholding is required under chapter 3 of the Code and the regulations under that chapter is treated for purposes of section 1461 and this paragraph (e) as having withheld tax in accordance with the provisions of chapter 3 of the Code and the regulations under that chapter. In addition, a withholding agent is indemnified against the claims and demands of any person for the amount of any payments made in accordance with the grace period provisions set forth in § 1.1441–1(b)(3)(iv). This paragraph (e) does not apply to relieve a withholding agent from tax liability under chapter 3 of the Code or the regulations under that chapter.

(f) *Amounts paid not constituting gross income.* Any amount withheld in accordance with § 1.1441–3 shall be reported and paid in accordance with this section, even though the amount paid to the beneficial owner may not constitute gross income in whole or in part. For this purpose, a reference in this section and § 1.1461–2 to an amount shall, where appropriate, be deemed to refer to the amount subject to withholding under § 1.1441–3.

(g) *Extensions of time to file Forms 1042 and 1042–S.* The IRS may grant an extension of time in which to file a Form 1042 or a Form 1042–S. Form 2758, Application for Extension of Time to File Certain Excise, Income, Information, and Other Returns (or such other form as the IRS may prescribe), must be used to request an extension of time for a Form 1042. Form 8809, Request for Extension of Time to File Information Returns (or such other form as the IRS may prescribe) must be used to request an extension of time for a Form 1042–S. The request must contain a statement of the reasons for requesting the extension and such other information as the forms or instructions may require. It must be mailed or delivered not later than March 15 of the year following the end of the calendar year for which the return will be filed.

(h) *Penalties.* For penalties and additions to the tax for failure to file returns or furnish statements in accordance with this section, see sections 6651, 6662, 6663, 6721, 6722, 6723, 6724(c), 7201, 7203, and the regulations under those sections.

(i) *Effective/applicability date.* (1) Unless otherwise provided in this section, this section shall apply to returns required for payments made after December 31, 2000.

(2) [Reserved]. For further guidance, see § 1.1461–1T(i)(2).

[T.D. 8734, 62 FR 53467, Oct. 14, 1997]

EDITORIAL NOTE: For FEDERAL REGISTER citations affecting § 1.1461–1, see the List of CFR Sections Affected, which appears in the Finding Aids section of the printed volume and at *www.fdsys.gov.*

§ 1.1461–1T Payments and returns of tax withheld (temporary).

(a) [Reserved] For further guidance, see § 1.1461–1(a).

(b) *Income tax return*—(1) *General rule.* A withholding agent shall make an income tax return on Form 1042 (or such other form as the IRS may prescribe) for income paid during the preceding calendar year that the withholding agent is required to report on an information return on Form 1042–S (or such other form as the IRS may prescribe) under paragraph (c)(1) of this section. See section 6011 and § 1.6011–1(c). The withholding agent must file the return on or before March 15 of the calendar year following the year in which the income was paid. The return must show the aggregate amount of income paid and tax withheld required to be reported on all the Forms 1042–S for the preceding calendar year by the withholding agent, in addition to such information as is required by the form and accompanying instructions. See § 1.1474–1(c) for the requirement to show the aggregate chapter 4 reportable amounts and tax withheld on Form 1042. A single Form 1042 may be filed by a withholding agent to report amounts under chapters 3 and 4, including tax withheld. Withholding certificates or other statements or information provided to a withholding agent are not required to be attached to the return. A return must be filed under this paragraph (b)(1) even though no tax was required to be withheld during the preceding calendar year. The withholding agent must retain a copy of Form 1042 for the applicable statute of limitations on assessments and collection with respect to the amounts required to be reported on the Form 1042. See section 6501 and the regulations thereunder for the applicable statute of limitations. Adjustments to the total amount of tax withheld, as described in § 1.1461–2, shall be stated on the return as prescribed by the form and accompanying instructions.

(2) [Reserved] For further guidance, see § 1.1461–1(b)(2).

(c) *Information returns*—(1) *Filing requirement*—(i) *In general.* A withholding agent (other than an individual who is not acting in the course of a trade or business with respect to a payment) must make an information return on Form 1042–S (or such other form as the IRS may prescribe) to report the amounts subject to reporting, as defined in paragraph (c)(2) of this section, that were paid during the preceding calendar year. Notwithstanding the preceding sentence, any person that withholds or is required to withhold an amount under sections 1441, 1442, 1443, or § 1.1446–4(a) (applicable to publicly traded partnerships required to pay tax under section 1446 on distributions) must file a Form 1042–S, ''Foreign Person's U.S. Source Income Subject to Withholding,'' for the payment withheld upon whether or not that person is engaged in a trade or business and whether or not the payment is an amount subject to reporting. The reference in the previous sentence to withholding under § 1.1446–4 shall apply to partnership taxable years beginning after May 18, 2005, or such earlier time as the regulations under §§ 1.1446–1 through 1.1446–5 apply by reason of an election under § 1.1446–7. A Form 1042–S shall be prepared for each recipient of an amount subject to reporting and for each single type of income payment. The Form 1042–S shall be prepared in such manner as the form and accompanying instructions prescribe. One copy of the Form 1042–S shall be filed with the IRS on or before March 15th of the calendar year following the year in which the amount subject to reporting was paid. It shall be filed with a transmittal form as provided in the instructions to the Form 1042–S and to the transmittal form. Withholding certificates, documentary evidence, or other statements or documentation provided to a withholding agent are not required to be attached to the form. Another copy of the Form 1042–S must be furnished to the recipient for whom the form is prepared (or any other person, as required under this paragraph (c) or the instructions to the form) on or before March 15th of the calendar year following the year in which the amount subject to reporting was paid. The withholding agent must retain a copy of each Form 1042–S for the statute of limitations on assessment and collection applicable to the Form 1042 to which the Form 1042–S relates.

(ii) *Recipient*—(A) *Defined.* For purposes of this section, the term *recipient* means—

(*1*) A beneficial owner as defined in § 1.1441–1(c)(6), including a foreign estate or a foreign complex trust, as defined in § 1.1441–1(c)(25);

(*2*) A qualified intermediary as defined in § 1.1441–1(e)(5)(ii);

(*3*) A withholding foreign partnership as defined in § 1.1441–5(c)(2) or a withholding foreign trust under § 1.1441–5(e)(5)(v);

(*4*) A territory financial institution treated as a U.S. person under § 1.1441–1(b)(2)(iv)(A);

(*5*) A U.S. branch that is treated as a U.S. person under § 1.1441–1(b)(2)(iv)(A);

(*6*) A nonwithholding foreign partnership or a foreign simple trust as defined in § 1.1441–1(c)(24), but only to the extent the income is (or is treated as) effectively connected with the conduct of a trade or business in the United States by such entity, or if the nonwithholding foreign partnership or foreign simple trust is also described in paragraph (c)(1)(ii)(A)(*9*) or (c)(1)(ii)(A)(*10*) of this section;

(*7*) A payee, as defined in § 1.1441–1(b)(2) that is presumed to be a foreign person under the presumption rules of § 1.1441–1(b)(3); 1.1441–5(d) or (e)(6), or 1.6049–5(d);

(*8*) A partner receiving a distribution from a publicly traded partnership subject to withholding under section 1446 and § 1.1446–4 on distributions of effectively connected income. This paragraph (c)(1)(ii)(A)(*8*) shall apply to partnership taxable years beginning after May 18, 2005, or such earlier time as the regulations under §§ 1.1446–1 through 1.1446–5 apply by reason of an election under § 1.1446–7.

(*9*) A foreign intermediary, nonwithholding foreign partnership or nonwithholding foreign trust that is a participating FFI or registered deemed-compliant FFI with respect to a chapter 4 reporting pool of U.S. payees;

(*10*) A participating FFI or a registered deemed-compliant FFI that is a recipient of a withholdable payment described in § 1.1474–1(d)(1)(ii)(A)(*1*)(*iii*); and

(*11*) Any other person as required on Form 1042–S or the instructions to the form.

(B) *Persons that are not recipients.* A recipient does not include—

(*1*) A nonqualified intermediary, except with respect to a payment (or portion of a payment) for which a nonqualified intermediary that is an FFI is a recipient reporting as described in § 1.1474–1(d)(1)(ii)(A)(*1*)(*iii*), or if the nonqualified intermediary is also described in paragraph (c)(1)(ii)(A)(*9*) or (c)(1)(ii)(A)(*10*) of this section;

(*2*) A payee included in a chapter 3 or chapter 4 withholding rate pool;

(*3*) A flow-through entity, as defined in § 1.1441–1(c)(23) (to the extent it is receiving amounts subject to reporting other than income effectively connected with the conduct of a trade or business in the United States), that is not a recipient described in paragraphs (c)(1)(ii)(A)(9) or (c)(1)(ii)(A)(10) of this section; and

(*4*) A U.S. branch (including a territory financial institution) described in § 1.1441–1(b)(2)(iv)(A) that is not treated as a U.S. person under that section and is not a recipient described in paragraphs (c)(1)(ii)(A)(9) or (c)(1)(ii)(A)(10) of this section.

(C) *Coordination with chapter 4 reporting.* See § 1.1474–1(d)(1)(ii)(A) for persons that are defined as recipients of a withholdable payment of U.S. source FDAP income for purposes of chapter 4 in addition to the persons that are recipients under this paragraph (c)(1)(ii).

(c)(2) introductory text through (c)(2)(ii)(D)[Reserved] For further guidance, see § 1.1461–1(c)(2) introductory text through (c)(2)(ii)(D).

(A) through (D) [Reserved] For further guidance, see § 1.1461–1(c)(2)(ii)(A).

(E) Any item required to be reported on Form 1099, and such other forms as are prescribed pursuant to the information reporting provisions of sections 6041 through 6050W and the regulations under those sections;

(F) and (G) [Reserved] For further guidance, see § 1.1461–1(c)(2)(ii)(F) and (G).

(H) Interest (including original issue discount) paid with respect to foreign-targeted registered obligations issued before January 1, 2016, that are described in § 1.871–14(e)(2) to the extent the documentation requirements described in § 1.871–14(e)(3) and (e)(4) are

required to be satisfied (taking into account the provisions of §1.871–14(e)(4)(ii), if applicable;

(I) Interest on a foreign-targeted bearer obligation (see §§1.1441–1(b)(4)(i) and 1.1441–2(a)) issued before March 19, 2012;

(J) and (K) [Reserved] For further guidance, see §1.1461–1(c)(2)(ii)(J) and (K).

(3) [Reserved] For further guidance, see §1.1461–1(c)(3).

(i) The name, address, taxpayer identifying number of the withholding agent, and the withholding agent's status for chapter 3 purposes (based on the status codes applicable for chapter 3 purposes provided on the form);

(ii) [Reserved] For further guidance, see §1.1461–1(c)(3)(ii).

(iii) For a payment not subject to withholding under chapter 4, the rate of withholding applied or the basis for exempting the payment from withholding under chapter 3, and the exemption applicable to the payment for chapter 4 purposes (based on the exemption codes provided on the form);

(iv) through (ix) [Reserved] For further guidance, see §1.1461–1(c)(3)(iv) through (ix).

(4) *Method of reporting*—(i) *Payments by U.S. withholding agents to recipients.* A withholding agent that is a U.S. person (other than a foreign branch of a U.S. person that is a qualified intermediary as defined in §1.1441–1(e)(5)(ii) that makes payments of amounts subject to reporting on Form 1042–S must file a separate Form 1042–S for each recipient who receives such amount. For purposes of this paragraph (c)(4), a U.S. person includes a U.S. branch (including a territory financial institution) described in §1.1441–1(b)(2)(iv)(A) that is treated as a U.S. person. Except as may otherwise be required on Form 1042–S or the instructions to the form, only payments for which the income code, exemption code, withholding rate and recipient code are the same may be reported on a single Form 1042–S. See paragraph (c)(4)(ii) of this section for reporting of payments made to a person that is not a recipient. See §1.1474–1(d)(4) for additional requirements that may apply for reporting on Form 1042–S with respect to a withholdable payment that is a chapter 4 reportable amount.

(A) *Payments to beneficial owners.* If a U.S. withholding agent makes a payment directly to a beneficial owner it must complete Form 1042–S treating the beneficial owner as the recipient. Under the grace period rule of §1.1441–1(b)(3)(iv), a U.S. withholding agent may, under certain circumstances, treat a payee as a foreign person while the withholding agent awaits a valid withholding certificate. A U.S. withholding agent who relies on the grace period rule to treat a payee as a foreign person must file a Form 1042–S to report all payments on Form 1042–S during the period that person was presumed to be foreign even if that person is later determined to be a U.S. person based on appropriate documentation or is presumed to be a U.S. person after the grace period ends. In the case of joint owners, a withholding agent may provide a single Form 1042–S made out to the owner whose status the U.S. withholding agent relied upon to determine the applicable rate of withholding. If, however, any one of the owners requests its own Form 1042–S, the withholding agent must furnish a Form 1042–S to the person who requests it. If more than one Form 1042–S is issued for a single payment, the aggregate amount paid and tax withheld that is reported on all Forms 1042–S cannot exceed the total amounts paid to joint owners and the tax withheld thereon.

(B) *Payments to a qualified intermediary, a withholding foreign partnership, or a withholding foreign trust.* A U.S. withholding agent that makes payments to a qualified intermediary (whether or not the qualified intermediary assumes primary withholding responsibility for purposes of chapter 3 and chapter 4 of the Code), a withholding foreign partnership, or a withholding foreign trust shall complete Forms 1042–S treating the qualified intermediary, withholding foreign partnership, or withholding foreign trust as the recipient. The U.S. withholding agent must complete a separate Form 1042–S for each chapter 3 and chapter 4 withholding rate pool with respect to each qualified intermediary. A qualified intermediary that does not

assume primary withholding responsibility on all payments it receives provides information regarding the proportions of income subject to a particular withholding rate (that is, a chapter 3 withholding rate pool) to the withholding agent on a withholding statement associated with a qualified intermediary withholding certificate. In such a case, the U.S. withholding agent must complete a separate Form 1042–S for each chapter 3 and chapter 4 withholding rate pool with respect to the qualified intermediary. To the extent a qualified intermediary is required to report a payment under chapter 61, it may provide a U.S. withholding agent with information regarding withholding rate pools for U.S. non-exempt recipients (as defined under §1.1441–1(c)(21)). Amounts paid with respect to such withholding rate pools must be reported on a Form 1099 completed for each U.S. non-exempt recipient to the extent such U.S. non-exempt recipient is subject to Form 1099 reporting and is not reported on Form 1042–S. See, however, §1.1441–1(e)(5)(v)(C) for when a qualified intermediary may provide a chapter 4 withholding rate pool of U.S payees (in lieu of reporting such payees on a withholding statement) and for the withholding rate pools (including chapter 4 withholding rate pools) otherwise reportable on a withholding statement provided by a qualified intermediary.

(C) *Amounts paid to U.S. branches treated as U.S. persons.* A U.S. withholding agent making a payment to a U.S. branch of a foreign person (including a territory financial institution) described in §1.1441–1(b)(2)(iv)(A) shall complete Form 1042–S as follows—

(*1*) If the branch has provided the U.S. withholding agent with a withholding certificate that evidences its agreement with the withholding agent to be treated as a U.S. person, the U.S. withholding agent files Forms 1042–S treating the U.S. branch or territory financial institution as the recipient;

(*2*) If the branch has provided the U.S. withholding agent with a withholding certificate that transmits information regarding beneficial owners, qualified intermediaries, withholding foreign partnerships, or other recipients, the U.S. withholding agent must complete a separate Form 1042–S for each recipient whose documentation is associated with the U.S. branch's or territory financial institution's withholding certificate; or

(*3*) If the U.S. withholding agent cannot reliably associate a payment with a valid withholding certificate from the U.S. branch, it shall treat the U.S. branch as the recipient and report the income as effectively connected with the conduct of a trade or business in the United States except as otherwise provided in §1.1441–1(b)(2)(iv)(B)(*4*).

(D) *Dual Claims.* A U.S. withholding agent may make a payment to a foreign entity that is simultaneously claiming a reduced rate of tax on its own behalf for a portion of the payment and a reduced rate on behalf of persons in their capacity as interest holders in that entity on the remaining portion. See §1.1441–6(b)(2)(iii). If the claims are consistent and the withholding agent accepts the multiple claims, the withholding agent must file a separate Form 1042–S for those payments for which the entity is treated as the beneficial owner and Forms 1042–S for each of the interest holders in the entity for which the interest holder is treated as the recipient. For those payments for which the interest holder in an entity is treated as the recipient, the U.S. withholding agent shall prepare the Form 1042–S in the same manner as a payment made to a nonqualified intermediary or flow-through entity as set forth in paragraph (c)(4)(ii) of this section. If the claims are consistent but the withholding agent has not chosen to accept the multiple claims, or if the claims are inconsistent, the withholding agent must file a separate Form 1042–S for the person or persons it has chosen to treat as the recipients.

(ii) *Payments made by U.S. withholding agents to persons that are not recipients*—(A) *Amounts paid to a nonqualified intermediary, a flow-through entity, and certain U.S. branches.* If a U.S. withholding agent makes a payment to a nonqualified intermediary, a flow-through entity, or a U.S. branch (including a territory financial institution) described in §1.1441–1(b)(2)(iv) (other than

a U.S. branch or territory financial institution that is treated as a U.S. person), it must complete a separate Form 1042–S for each recipient to the extent the withholding agent can reliably associate a payment with valid documentation (within the meaning of §1.1441–1(b)(2)(vii)) from the recipient which is associated with the withholding certificate provided by the nonqualified intermediary, flow-through entity, or U.S. branch or territory financial institution. See §1.1474–1(d)(4)(i) for when a withholding agent may report a chapter 4 reportable amount made to such an entity in a chapter 4 withholding rate pool. See also §1.1441–1(e)(3)(iv)(A) for when a withholding statement provided by a nonqualified intermediary may include a chapter 4 withholding rate pool of U.S. payees. If a payment is reported by the withholding agent in a chapter 4 withholding rate pool, the withholding agent must report on Form 1042–S the nonqualified intermediary or flow-through entity as a recipient associated with the applicable chapter 4 withholding rate pool. If a payment is made through tiers of nonqualified intermediaries or flow-through entities, the withholding agent must nevertheless complete Form 1042–S for the recipient to the extent it can reliably associate the payment with documentation from the recipient. A withholding agent that is completing a Form 1042–S for a recipient that receives a payment through a nonqualified intermediary, a flow-through entity, or a U.S. branch or territory financial institution must include on the Form 1042–S the name of the nonqualified intermediary, flow-through entity, U.S. branch or territory financial institution from which the recipient directly receives the payment. If a U.S. withholding agent cannot reliably associate the payment, or any portion of the payment, with valid documentation from a recipient either because no such documentation has been provided or because the nonqualified intermediary, flow-through entity, or U.S. branch or territory financial institution has failed to provide sufficient allocation information so that the withholding agent can associate the payment, or any portion thereof, with valid documentation, then the withholding agent must report the payments as made to an unknown recipient in accordance with the appropriate presumption rules for that payment. Thus, if the payment is not a withholdable payment and under the presumption rules the payment is presumed to be made to a foreign person, the withholding agent must generally withhold 30 percent of the payment and report the payment on Form 1042–S made out to an unknown recipient and shall also include the name of the nonqualified intermediary, flow-through entity, U.S. branch or territory financial institution that received the payment on behalf of the unknown recipient. If, however, the recipient is presumed to be a U.S. non-exempt recipient (as defined in §1.1441–1(c)(21)), the withholding agent must withhold on the payment as required under section 3406 and report the payment as required under chapter 61 of the Internal Revenue Code. See §1.1474–1(d)(4) for reporting requirements that apply to payments of chapter 4 reportable amounts paid to nonqualified intermediaries and flow-through entities. If, however, the payment is a withholdable payment, the withholding agent must report the payment as made to a chapter 4 withholding rate pool of nonparticipating FFIs in accordance with the presumption rule under §1.1471–3(f)(5).

(B) [Reserved] For further guidance, see §1.1461–1(c)(4)(ii)(B).

(iii) [Reserved] For further guidance, see §1.1461–1(c)(4)(iii).

(iv) *Reporting by a nonqualified intermediary, flow-through entity, and certain U.S. branches.* A nonqualified intermediary, flow-through entity, or U.S. branch (including a territory financial institution) described in §1.1441–1(e)(2)(iv) (other than a U.S. branch or territory financial institution, that is treated as a U.S. person) is a withholding agent and must file Forms 1042–S for amounts paid to recipients in the same manner as a U.S. withholding agent. A Form 1042–S will not be required, however, if another withholding agent has reported the same amount for which the nonqualified intermediary, flow-through entity, or U.S.

branch would be required to file a return and the entire amount that should be withheld from such payment has been withheld (including withholding and reporting in accordance with the applicable presumption rule for the payment). A nonqualified intermediary, flow-through entity, or U.S. branch must report payments made to recipients to the extent it has failed to provide the appropriate documentation to another withholding agent together with the information required for that withholding agent to reliably associate the payment with the recipient documentation or to the extent it knows, or has reason to know, that less than the required amount has been withheld. A nonqualified intermediary or flow-through entity that is required to report a payment on Form 1042–S must follow the same rules as apply to a U.S. withholding agent under paragraph (c)(4)(i) and (c)(4)(ii) of this section.

(v) *Pro rata reporting for allocation failures*. If a nonqualified intermediary, flow-through entity, or U.S. branch (including a territory financial institution) described in §1.1441–1(b)(2)(iv) (other than a U.S. branch or territory financial institution treated as a U.S. person) uses the alternative procedures of §1.1441–1(e)(3)(iv)(D) and fails to provide information sufficient to allocate the amount subject to reporting paid to a withholding rate pool to the payees identified for that pool, then the withholding agent shall report the payment in accordance with the rule provided in §1.1441–1(e)(3)(iv)(D)(*6*).

(vi) [Reserved] For further guidance, see §1.1461–1(c)(4)(vi).

(5) *Magnetic media reporting*. A withholding agent that makes 250 or more Form 1042–S information returns for a taxable year must file Form 1042–S returns on magnetic media. See, however, §301.1474–1(a) of this chapter for the requirements for a withholding agent that is a financial institution to file Forms 1042–S on magnetic media. See, also, §301.6011–2 of this chapter for requirements applicable to a withholding agent that files Forms 1042–S with the IRS on magnetic media and publications of the IRS relating to magnetic media filing.

(d) through (i)(1) [Reserved]. For further guidance, see §1.1461–1(d) through (i)(1).

(2) Unless otherwise provided in this section, this section shall apply to payments made after June 30, 2014.

(j) *Expiration date*. The applicability of this section expires on February 28, 2017.

[T.D. 9658, 79 FR 12789, Mar. 6, 2014; 79 FR 37187, July 1, 2014]

§1.1461–2 Adjustments for overwithholding or underwithholding of tax.

(a) *Adjustments of overwithheld tax*—(1) *In general*. Except for partnerships or nominees required to withhold under section 1446, a withholding agent that has overwithheld under chapter 3 of the Internal Revenue Code, and made a deposit of the tax as provided in §1.6302–2(a) may adjust the overwithheld amount either pursuant to the reimbursement procedure described in paragraph (a)(2) of this section or pursuant to the set-off procedure described in paragraph (a)(3) of this section. References in the previous sentence excepting from this section certain partnerships withholding under section 1446 shall apply to partnership taxable years beginning after May 18, 2005, or such earlier time as the regulations under §§1.1446–1 through 1.1446–5 apply by reason of an election under §1.1446–7. Adjustments under this paragraph (a) may only be made within the time prescribed under paragraph (a) (2) or (3) of this section. After such time, a refund of the amount overwithheld can only be claimed by the beneficial owner with the Internal Revenue Service (IRS) pursuant to the procedures described in chapter 65 of the Code. For purposes of this section, the term overwithholding means any amount actually withheld (determined before application of the adjustment procedures under this section) from an item of income pursuant to chapter 3 of the Code or the regulations thereunder in excess of the actual tax liability due, regardless of whether such overwithholding was in error or appeared correct at the time it occurred.

(2) *Reimbursement of tax*—(i) [Reserved] For further guidance, see §1.1461–2T(a)(2)(i).

(ii) *Record maintenance.* If the beneficial owner is repaid an amount of withholding tax under the provisions of this paragraph (a)(2), the withholding agent shall keep as part of its records a receipt showing the date and amount of repayment and the withholding agent must provide a copy of such receipt to the beneficial owner. For this purpose, a canceled check or an entry in a statement is sufficient provided that the check or statement contains a specific notation that it is a refund of tax overwithheld.

(3) *Set-offs.* Under the set-off procedure, the withholding agent may repay the beneficial owner or payee by applying the amount overwithheld against any amount which otherwise would be required under chapter 3 of the Code or the regulations thereunder to be withheld from income paid by the withholding agent to such person before the earlier of the due date (without regard to extensions) for filing the Form 1042–S for the calendar year of overwithholding or the date that the Form 1042–S is actually filed with the IRS. For purposes of making a return on Form 1042 or 1042–S (or an amended form) for the calendar year of overwithholding and for purposes of making a deposit of the amount withheld, the reduced amount shall be considered the amount required to be withheld from such income under chapter 3 of the Code and the regulations thereunder.

(4) [Reserved] For further guidance, see § 1.1461–2T(a)(4).

(b) *Withholding of additional tax when underwithholding occurs.* A withholding agent may withhold from future payments (or distributions of effectively connected income under section 1446) made to a beneficial owner the tax that should have been withheld from previous payments (or distributions subject to section 1446) to such beneficial owner under chapter 3 of the Internal Revenue Code. In the alternative, the withholding agent may satisfy the tax from property that it holds in custody for the beneficial owner or property over which it has control. Such additional withholding or satisfaction of the tax owed may only be made before the date that the Form 1042 is required to be filed (not including extensions) for the calendar year in which the underwithholding occurred. See § 1.6302–2 for making deposits of tax or § 1.1461–1(a) for making payment of the balance due for a calendar year. See also §§ 1.1461–1, 1.1461–3, and 1.1446–1 through 1.1446–7 for rules relating to withholding under section 1446. References in this paragraph (b) to withholding under section 1446 shall apply to partnership taxable years beginning after May 18, 2005, or such earlier time as the regulations under §§ 1.1446–1 through 1.1446–5 apply by reason of an election under § 1.1446–7.

(c) *Definition.* For purposes of this section, the term *payment period* means the period for which the withholding agent is required by § 1.6302–2(a)(1) to make a deposit of tax withheld under chapter 3 of the Code.

(d) Effective/applicability date—(1) Unless otherwise provided in this section, this section applies to payments made after December 31, 2000.

(2) [Reserved] For further guidance, see § 1.1461–2T(d)(2).

[T.D. 8734, 62 FR 53470, Oct. 14, 1997, as amended by T.D. 8804, 63 FR 72188, Dec. 31, 1998; T.D. 8856, 64 FR 73412, Dec. 30, 1999; T.D. 9200, 70 FR 28741, May 18, 2005; T.D. 9658, 79 FR 12792, Mar. 6, 2014]

§ 1.1461–2T Adjustments for overwithholding or underwithholding of tax (temporary).

(a)(1) [Reserved] For further guidance, see § 1.1461–2(a)(1).

(2) Reimbursement of tax—(i) *General rule.* Under the reimbursement procedure, the withholding agent repays the beneficial owner or payee for the amount overwithheld. In such a case, the withholding agent may reimburse itself by reducing, by the amount of tax actually repaid to the beneficial owner or payee, the amount of any deposit of tax made by the withholding agent under § 1.6302–2(a)(1)(iii) for any subsequent payment period occurring before the end of the calendar year following the calendar year of overwithholding. Any such reduction that occurs for a payment period in the calendar year following the calendar year of overwithholding shall be allowed only if—

(A) The repayment to the beneficial owner or payee occurs before the earlier of the due date (not including extensions) for filing Form 1042–S for the calendar year of overwithholding or the date the Form 1042–S is actually filed with the IRS;

(B) The withholding agent states on a timely filed (not including extensions) Form 1042 for the calendar year of overwithholding, that the filing of the Form 1042 constitutes a claim for credit in accordance with § 1.6414–1; and

(C) The withholding agent states, on a timely filed (not including extensions) Form 1042 for the calendar year of overwithholding, that the filing of the Form 1042 constitutes a claim for credit in accordance with § 1.6414–1.

(ii) and (3) [Reserved] For further guidance, see § 1.1461–2(a)(2)(ii) and (3).

(4) *Examples*. The principles of this paragraph (a) are illustrated by the following examples:

Example 1. (i) N is a nonresident alien individual who is a resident of the United Kingdom. In December 2001, a domestic corporation C pays a dividend of $100 to N, at which time C withholds $30 and remits the balance of $70 to N. On February 10, 2002, prior to the time that C files its Form 1042 and Form 1042–S with respect to the payment, N furnishes a valid Form W–8 described in § 1.1441–1(e)(2)(i) upon which C may rely to reduce the rate of withholding to 15% under the provisions of the U.S.-U.K. tax treaty. Consequently, N advises C that its tax liability is only $15 and not $30 and requests reimbursement of $15. Although C has already deposited the $30 that was withheld, as required by § 1.6302–2(a)(1)(iv), C repays N in the amount of $15.

(ii) During 2001, C makes no other payments upon which tax is required to be withheld under chapter 3 of the Code; accordingly, its return on Form 1042 for such year, which is filed on March 15, 2002, shows total tax withheld of $30, an adjusted total tax withheld of $15, and $30 previously paid for such year. Pursuant to § 1.6414–1(b), C claims a credit for the overpayment of $15 shown on the Form 1042 for 2001. Accordingly, it is permitted to reduce by $15 any deposit required by § 1.6302–2 to be made of tax withheld during the calendar year 2002. The Form 1042–S required to be filed by C with respect to the dividend of $100 paid to N in 2001 is required to show tax withheld under chapter 3 of $30 and tax repaid to N of $15.

Example 2. The facts are the same as in *Example 1*. In addition, during 2002, C makes payments to N upon which it is required to withhold $200 under chapter 3 of the Code, all of which is withheld in June 2002. Pursuant to § 1.6302–2(a)(1)(iii), C deposits the amount of $185 on July 15, 2002 ($200 less the $15 for which credit is claimed on the Form 1042 for 2001). On March 15, 2003, C Corporation files its return on Form 1042 for calendar year 2002, which shows total tax withheld of $200, $185 previously deposited by C, and $15 allowable credit.

Example 3. The facts are the same as in *Example 1*. Under § 1.6302–2(a)(1)(ii), C is required to deposit on a quarter-monthly basis the tax withheld under chapter 3 of the Code. C withholds tax of $100 between February 8 and February 15, 2002, and deposits $75 [($100 × 90%) less $15] of the withheld tax within 3 banking days after February 15, 2002, and by depositing $10 [($100 − $15) less $75] within 3 banking days after March 15, 2002.

(b) through (d)(1) [Reserved] For further guidance, see § 1.1461–2(b) through (d)(1).

(2) The provisions of this section apply to payments made after June 30, 2014.

(e) *Expiration date*. The applicability of this section expires on February 28, 2017.

[T.D. 9658, 79 FR 12792, Mar. 6, 2014]

§ 1.1461–3 Withholding under section 1446.

For rules relating to the withholding tax liability of a partnership or nominee under section 1446, see §§ 1.1446–1 through 1.1446–7. For interest, penalties, and additions to the tax for failure to timely pay the tax required to be paid under section 1446, see sections 6601, 6651, 6655 (in the case of publicly traded partnerships, see section 6656), 6672, and 7202 and the regulations under those sections. For additional penalties and additions to the tax for failure to comply with the regulations under section 1446, see sections 6651, 6662, 6663, 6721, 6722, 6723, 6724(c), 7201, 7203, and the regulations under those sections. This section shall apply to partnership taxable years beginning after May 18, 2005, or such earlier time as the regulations under §§ 1.1446–1 through 1.1446–5 apply by reason of an election under § 1.1446–7.

[T.D. 9200, 70 FR 28741, May 18, 2005]

§ 1.1462–1 Withheld tax as credit to recipient of income.

(a) *Creditable tax*. The entire amount of the income from which the tax is required to be withheld (including amounts calculated under the gross-up formula in § 1.1441–3(f)(1)) shall be included in gross income in the return required to be made by the beneficial owner of the income, without deduction for the amount required to be or actually withheld, but the amount of tax actually withheld shall be allowed as a credit against the total income tax computed in the beneficial owner's return.

(b) *Amounts paid to persons who are not the beneficial owner*. Amounts withheld at source under chapter 3 of the Internal Revenue Code on payments to (or effectively connected taxable income allocable to) a fiduciary, partnership, or intermediary are deemed to have been paid by the taxpayer ultimately liable for the tax upon such income. Thus, for example, if a beneficiary of a trust is subject to the taxes imposed by section 1, 2, 3, or 11 upon any portion of the income received from a foreign trust, the part of any amount withheld at source which is properly allocable to the income so taxed to such beneficiary shall be credited against the amount of the income tax computed upon the beneficiary's return, and any excess shall be refunded. See § 1.1446–3 for examples applying this rule in the context of a partnership interest held by a foreign trust or estate. Further, if a partnership withholds an amount under chapter 3 of the Internal Revenue Code with respect to the allocable share of a partner that is a partnership (upper-tier partnership) or with respect to the allocable share of partners in an upper-tier partnership, such amount is deemed to have been withheld by the upper-tier partnership. See § 1.1446–5 for rules applicable to tiered partnership structures. References in this paragraph (b) to withholding under section 1446 shall apply to partnership taxable years beginning after May 18, 2005, or such earlier time as the regulations under §§ 1.1446–1 through 1.1446–5 apply by reason of an election under § 1.1446–7.

(c) *Effective date*. Unless otherwise provided in this section, this section applies to payments made after December 31, 2000.

[T.D. 8734, 62 FR 53471, Oct. 14, 1997, as amended by T.D. 8804, 63 FR 72188, Dec. 31, 1998; T.D. 9200, 70 FR 28741, May 18, 2005]

§ 1.1463–1 Tax paid by recipient of income.

(a) *Tax paid*. If the tax required to be withheld under chapter 3 of the Internal Revenue Code is paid by the beneficial owner of the income or by the withholding agent, it shall not be recollected from the other, regardless of the original liability therefor. However, this section does not relieve the person that did not withhold tax from liability for interest or any penalties or additions to tax otherwise applicable. See § 1.1441–7(b) for additional applicable rules. See § 1.1446–3(e) and (f) for application of the rule of this paragraph (a), and for additional rules, where the withholding tax was required to be paid under section 1446. The previous sentence shall apply to partnership taxable years beginning after May 18, 2005, or such earlier time as the regulations under §§ 1.1446–1 through 1.1446–5 apply by reason of an election under § 1.1446–7.

(b) *Effective date*. Unless otherwise provided in this section, this section applies to failures to withhold occurring after December 31, 2000.

[T.D. 8734, 62 FR 53471, Oct. 14, 1997, as amended by T.D. 8804, 63 FR 72188, Dec. 31, 1998; T.D. 8856, 64 FR 73412, Dec. 30, 1999; T.D. 9200, 70 FR 28741, May 18, 2005]

§ 1.1464–1 Refunds or credits.

(a) *In general*. The refund or credit under chapter 65 of the Code of an overpayment of tax which has actually been withheld at the source under chapter 3 of the Code shall be made to the taxpayer from whose income the amount of such tax was in fact withheld. To the extent that the overpayment under chapter 3 was not in fact withheld at the source, but was paid, by the withholding agent the refund or credit under chapter 65 of the overpayment shall be made to the withholding agent. Thus, where a debtor corporation assumes liability pursuant to its tax-free covenant for the tax required

to be withheld under chapter 3 upon interest and pays the tax in behalf of its bondholder, and it can be shown that the bondholder is not in fact liable for any tax, the overpayment of tax shall be credited or refunded to the withholding agent in accordance with chapter 65 since the tax was not actually deducted and withheld from the interest paid to the bondholder. In further illustration, where a withholding agent who is required by chapter 3 to withhold $300 tax from rents paid to a nonresident alien individual mistakenly withholds $320 and mistakenly pays $350 as internal revenue tax, the amount of $30 shall be credited or refunded to the withholding agent in accordance with chapter 65 and the amount of $20 shall be credited or refunded in accordance with such chapter to the person from whose income such amount has been withheld. With respect to section 1446, this section shall only apply to a publicly traded partnership described in § 1.1446–4.

(b) *Tax repaid to payee.* For purposes of this section and § 1.6414–1, any amount of tax withheld under chapter 3 of the Code, which, pursuant to paragraph (a)(1) of § 1.1461–2, is repaid by the withholding agent to the person from whose income such amount was erroneously withheld shall be considered as tax which, within the meaning of sections 1464 and 6414, was not actually withheld by the withholding agent.

(c) *Effective/Applicability date.* The last sentence in paragraph (a) of this section shall apply to partnership taxable years beginning after April 29, 2008.

[T.D. 6922, 32 FR 8713, June 17, 1967, as amended by T.D. 8804, 63 FR 72188, Dec. 31, 1998; T.D. 9394, 73 FR 23085, Apr. 29, 2008; 74 FR 14932, Apr. 2, 2009]

INFORMATION REPORTING BY FOREIGN FINANCIAL INSTITUTIONS

§ 1.1471–0 Outline of regulation provisions for sections 1471 through 1474.

This section lists the table of contents for §§ 1.1471–1 through 1.1474–7 and § 301.1474–1 of this chapter.

§ 1.1471–1 Scope of chapter 4 and definitions.

(a) Scope of chapter 4 of the Internal Revenue Code.
(b) Definitions.
(1) Account.
(2) Account holder.
(3) Active NFFE.
(4) AML due diligence.
(5) Annuity contract.
(6) Assumes primary withholding responsibility.
(7) Beneficial owner.
(8) Blocked account.
(9) Broker.
(10) Cash value.
(11) Cash value insurance contract.
(12) Certified deemed-compliant FFI.
(13) Change in circumstances.
(14) Chapter 3.
(15) Chapter 4.
(16) Chapter 4 reportable amount.
(17) Chapter 4 status.
(18) Clearing organization.
(19) Complex trust.
(20) Consolidated obligations.
(21) Custodial account.
(22) Custodial institution.
(23) Customer master file.
(24) Deemed-compliant FFI.
(25) Deferred annuity contract.
(26) Depository account.
(27) Depository institution.
(28) Documentary evidence.
(29) Documentation.
(30) Dormant account.
(31) Effective date of the FFI agreement.
(32) EIN.
(33) Election to be withheld upon.
(34) Electronically searchable information.
(35) Entity.
(36) Entity account.
(37) Excepted NFFE.
(38) Exempt beneficial owner.
(39) Expanded affiliated group.
(40) FATF.
(41) FATF-compliant jurisdiction.
(42) FFI.
(43) FFI agreement.
(44) Financial account.
(45) Financial institution.
(46) Flow-through entity.
(47) Flow-through withholding certificate.
(48) Foreign entity.
(49) Foreign passthru payment.
(50) Foreign payee.
(51) Foreign person.
(52) GIIN.
(53) Grandfathered obligation.
(54) Grantor trust.
(55) Gross proceeds.
(56) Group annuity contract.
(57) Group insurance contract.
(58) Immediate annuity.
(59) Individual account.
(60) Insurance company.
(61) Insurance contract.

(62) Intermediary.
(63) Intermediary withholding certificate.
(64) Investment entity.
(65) Investment-linked annuity contract.
(66) Investment-linked insurance contract.
(67) IRS FFI list.
(68) Life annuity contract.
(69) Life insurance contract.
(70) Limited branch.
(71) Limited FFI.
(72) Model 1 IGA.
(73) Model 2 IGA.
(74) NFFE.
(75) Nonparticipating FFI.
(76) Nonreporting IGA FFI.
(77) Non-U.S. account.
(78) NQI.
(79) NWP.
(80) NWT.
(81) Offshore account.
(82) Offshore obligation.
(83) Owner.
(84) Owner-documented FFI.
(85) Participating FFI.
(86) Participating FFI group.
(87) Partnership.
(88) Passive NFFE.
(89) Passthru payment.
(90) Payee.
(91) Payment with respect to an offshore obligation.
(92) Payor.
(93) Permanent residence address.
(94) Person.
(95) Preexisting account.
(96) Preexisting entity account.
(97) Preexisting individual account.
(98) Preexisting obligation.
(99) Pre-FATCA Form W–8.
(100) Prima facie FFI.
(101) QI.
(102) QI agreement.
(103) QI branch of a U.S. financial institution.
(104) Recalcitrant account holder.
(105) Registered deemed-compliant FFI.
(106) Relationship manager.
(107) Reporting Model 1 FFI.
(108) Responsible officer.
(109) Restricted distributor.
(110) Simple trust.
(111) Specified insurance company.
(112) Specified U.S. person.
(113) Sponsored FFI.
(114) Sponsored FFI group.
(115) Sponsoring entity.
(116) Standardized industry code.
(117) Standing instructions to pay amounts.
(118) Subject to withholding.
(119) Substantial U.S. owner.
(120) Territory entity.
(121) Territory financial institution.
(122) Territory financial institution treated as a U.S. person.
(123) Territory NFFE.
(124) TIN.
(125) U.S. account.
(126) U.S. branch treated as a U.S. person.
(127) U.S. financial institution.
(128) U.S. indicia.
(129) U.S. owned foreign entity.
(130) U.S. payee.
(131) U.S. payor.
(132) U.S. person.
(133) U.S. source FDAP income.
(134) U.S. territory.
(135) U.S. withholding agent.
(136) Withholdable payment.
(137) Withholding.
(138) Withholding agent.
(139) Withholding certificate.
(140) WP.
(141) Written statement.
(142) WT.
(c) Effective/applicability date.

§ 1.1471–2 Requirement to deduct and withhold tax on withholdable payments to certain FFIs.

(a) Requirement to withhold on payments to FFIs.
(1) General rule of withholding.
(2) Special withholding rules.
(i) Requirement to withhold on payments of U.S. source FDAP income to participating FFIs and deemed-compliant FFIs that are NQIs, NWPs, or NWTs.
(ii) Residual withholding responsibility of intermediaries and flow-through entities.
(iii) Requirement to withhold if a participating FFI or registered deemed-compliant FFI makes an election to be withheld upon.
(A) Election to be withheld upon for U.S. source FDAP income.
(B) Election to be withheld upon for gross proceeds.
(iv) Withholding obligation of a territory financial institution.
(v) Withholding obligation of a foreign branch of a U.S. financial institution.
(vi) Payments of gross proceeds.
(3) Coordination of withholding under sections 1471(a) and (b).
(4) Payments for which no withholding is required.
(i) Exception to withholding if the withholding agent lacks control, custody, or knowledge.
(A) In general.
(B) Example.
(ii) Exception to withholding for certain payments made prior to January 1, 2016 (transitional).
(A) In general.
(B) Prima facie FFIs.
(iii) Payments to a participating FFI.
(iv) Payments to a deemed-compliant FFI.
(v) Payments to an exempt beneficial owner.
(vi) Payments to a territory financial institution.
(vii) Payments to an account held with a clearing organization with FATCA-compliant membership.

(viii) Payments to certain excepted accounts.
(5) Withholding requirements if source or character of payments is unknown.
(i) General rule.
(ii) Optional escrow procedure.
(b) Grandfathered obligations.
(1) Grandfathered treatment of outstanding obligations.
(2) Definitions.
(i) Grandfathered obligation.
(ii) Obligation.
(iii) Date outstanding.
(iv) Material modification.
(3) Application to flow-through entities.
(i) Partnerships.
(ii) Simple trusts.
(iii) Grantor trusts.
(4) Determination by withholding agent of grandfathered treatment.
(i) In general.
(ii) Determination of material modification.
(iii) Record retention.
(c) Effective/applicability date.

§ 1.1471–3 Identification of payee.

(a) Payee defined.
(1) In general.
(2) Payee with respect to a financial account.
(3) Exceptions.
(i) Certain foreign agents or intermediaries.
(ii) Foreign flow-through entity.
(iii) U.S. intermediary or agent of a foreign person.
(iv) Territory financial institution.
(v) Disregarded entity or branch.
(vi) U.S. branch of certain foreign banks or foreign insurance companies.
(vii) Foreign branch of a U.S. person.
(b) Determination of payee's status.
(1) Determining whether a payment is received by an intermediary.
(2) Determination of entity type.
(3) Determination of whether the payment is made to a QI, WP, or WT.
(4) Determination of whether the payee is receiving effectively connected income.
(c) Rules for reliably associating a payment with a withholding certificate or other appropriate documentation.
(1) In general.
(2) Reliably associating a payment with documentation if a payment is made through an intermediary or flow-through entity that is not the payee.
(i) In general.
(ii) Exception to entity account documentation rules for an offshore account of an intermediary or flow-through entity.
(3) Requirements for validity of certificates.
(i) Form W–9.
(ii) Beneficial owner withholding certificate (Form W–8BEN).
(iii) Withholding certificate of an intermediary, flow-through entity, or U.S. branch (Form W–8IMY).
(A) In general.
(B) Withholding statement.
(*1*) In general.
(*2*) Special requirements for an FFI withholding statement.
(*3*) Special requirements for a chapter 4 withholding statement.
(*4*) Special requirements for an exempt beneficial owner withholding statement.
(C) Failure to provide allocation information.
(D) Special rules applicable to a withholding certificate of a QI that assumes primary withholding responsibility under chapter 3.
(E) Special rules applicable to a withholding certificate of a QI that does not assume primary withholding responsibility under chapter 3.
(F) Special rules applicable to a withholding certificate of a territory financial institution that agrees to be treated as a U.S. person.
(G) Special rules applicable to a withholding certificate of a territory financial institution that does not agree to be treated as a U.S. person.
(H) Special rules applicable to a withholding certificate of a U.S. branch treated as a U.S. person.
(iv) Certificate for exempt status (Form W–8EXP).
(v) Certificate for effectively connected income (Form W–8ECI).
(4) Requirements for written statements.
(5) Requirements for documentary evidence.
(i) Foreign status.
(A) Certificate of residence.
(B) Individual government identification.
(C) QI documentation.
(D) Entity government documentation.
(E) Third-party credit report.
(ii) Chapter 4 status.
(A) General documentary evidence.
(B) Preexisting account documentary evidence.
(C) Payee-specific documentary evidence.
(6) Applicable rules for withholding certificates, written statements, and documentary evidence.
(i) Who may sign the withholding certificate or written statement.
(ii) Period of validity.
(A) General rule.
(B) Indefinite validity.
(C) Indefinite validity in the case of certain offshore obligations.
(D) Exception for certificate for effectively connected income.
(E) Change in circumstances.
(*1*) Defined.

(*2*) Obligation to notify withholding agent of a change in circumstances.

(*3*) Withholding agent's obligation with respect to a change in circumstances.

(iii) Record retention.

(A) In general.

(B) Exception for documentary evidence received with respect to offshore obligations.

(iv) Electronic transmission of withholding certificate, written statement, and documentary evidence.

(v) Acceptable substitute withholding certificate.

(A) In general.

(B) Non-IRS form for individuals.

(vi) Electronic confirmation of TIN on withholding certificate.

(vii) Reliance on a prior version of a withholding certificate.

(7) Curing documentation errors.

(i) Curing inconsequential errors on a withholding certificate.

(ii) Documentation received after the time of payment.

(8) Documentation furnished on account-by-account basis unless exception provided for sharing documentation within expanded affiliated group.

(i) Single branch systems.

(ii) Universal account systems.

(iii) Shared account systems.

(iv) Document sharing gross proceeds.

(9) Reliance on documentation collected by or certifications provided by other persons.

(i) Shared documentation system maintained by an agent.

(ii) Third-party data providers.

(iii) Reliance on certification provided by introducing brokers.

(iv) Reliance on documentation and certifications provided between principals and agents.

(A) In general.

(B) Reliance upon certification of the principal.

(C) Document sharing.

(D) Examples.

(v) Reliance upon documentation for accounts acquired in merger or bulk acquisition for value.

(d) Documentation requirements to establish payee's chapter 4 status.

(1) Reliance on pre-FATCA Form W–8.

(2) Identification of U.S. persons.

(i) In general.

(ii) Reliance on documentary evidence.

(iii) Preexisting obligations.

(3) Identification of individuals that are foreign persons.

(i) In general.

(ii) Exception for offshore obligations.

(4) Identification of participating FFIs and registered deemed-complaint FFIs.

(i) In general.

(ii) Exception for payments made prior to January 1, 2017, with respect to preexisting obligations (transitional).

(iii) Exception for offshore obligations.

(iv) Exceptions for payments to reporting Model 1 FFIs.

(v) Reason to know.

(5) Identification of certified deemed-compliant FFIs.

(i) In general.

(ii) Sponsored, closely-held investment vehicles.

(A) In general.

(B) Offshore obligations.

(6) Identification of owner-documented FFIs.

(i) In general.

(ii) Auditor's letter substitute.

(iii) Documentation for owners of payee.

(iv) Content of FFI owner reporting statement.

(v) Exception for preexisting obligations (transitional).

(vi) Exception for offshore obligations.

(vii) Exception for certain obligations of $1,000,000 or less.

(7) Nonreporting IGA FFIs.

(i) In general.

(ii) Exception for offshore obligations.

(8) Identification of nonparticipating FFIs.

(i) In general.

(ii) Special documentation rules for payments made to an exempt beneficial owner through a nonparticipating FFI.

(9) Identification of exempt beneficial owners.

(i) Identification of foreign governments, governments of U.S. territories, international organizations, and foreign central banks of issue.

(A) In general.

(B) Exception for offshore obligations.

(C) Exception for preexisting offshore obligations.

(ii) Identification of retirement funds.

(A) In general.

(B) Exception for offshore obligations.

(C) Exception for preexisting offshore obligations.

(iii) Identification of entities wholly owned by exempt beneficial owners.

(10) Identification of territory financial institutions.

(i) Identification of territory financial institutions that are beneficial owners.

(A) In general.

(B) Exception for preexisting offshore obligations.

(ii) Identification of territory financial institutions acting as intermediaries or that are flow-through entities.

(iii) Reason to know.

(11) Identification of excepted NFFEs.

(i) Identification of excepted nonfinancial group entities.

(A) In general.

(B) Exception for offshore obligations.

(ii) Identification of excepted nonfinancial start-up companies.

(A) In general.

(B) Exception for offshore obligations.
(C) Exception for preexisting offshore obligations.
(iii) Identification of excepted nonfinancial entities in liquidation or bankruptcy.
(A) In general.
(B) Exception for offshore obligations.
(C) Exception for preexisting offshore obligations.
(iv) Identification of section 501(c) organizations.
(A) In general.
(B) Reason to know.
(v) Identification of non-profit organizations.
(A) In general.
(B) Exception for offshore obligations.
(C) Exception for preexisting offshore obligations.
(D) Reason to know.
(vi) Identification of NFFEs that are publicly traded corporations.
(A) Exception for offshore obligations.
(B) Exception for preexisting offshore obligations.
(vii) Identification of NFFE affiliates.
(A) Exception for offshore obligations.
(B) Exception for preexisting offshore obligations.
(viii) Identification of excepted territory NFFEs.
(A) Exception for payments made prior to January 1, 2017, with respect to preexisting obligations of $1,000,000 or less (transitional).
(B) Exception for offshore obligations.
(C) Exception for preexisting offshore obligations of $1,000,000 or less.
(ix) Identification of active NFFEs.
(A) Exception for offshore obligations.
(B) Exception for preexisting offshore obligations.
(C) Limit on reason to know.
(12) Identification of passive NFFEs.
(i) Exception for offshore obligations.
(ii) Special rule for preexisting offshore obligations.
(iii) Required owner certification for passive NFFEs.
(A) In general.
(B) Exception for preexisting obligations of $1,000,000 or less (transitional).
(e) Standards of knowledge.
(1) In general.
(2) Notification by the IRS.
(3) Participating FFIs and registered deemed-compliant FFIs.
(i) In general.
(ii) Special rules for reporting Model 1 FFIs.
(4) Reason to know.
(i) Information conflicting with person's claim of chapter 4 status.
(ii) Specific standards of knowledge applicable to withholding certificates.
(A) In general.
(B) Classification of U.S. status, U.S. address, or U.S. telephone number.
(*1*) Presumption of individual's foreign status.
(*2*) Presumption of entity's foreign status.
(C) U.S. place of birth.
(*1*) Accounts opened on or after January 1, 2014.
(*2*) Preexisting obligations.
(D) Standing instructions with respect to offshore obligations.
(iii) Specific standard of knowledge applicable to written statements.
(iv) Specific standard of knowledge applicable to documentary evidence.
(A) In general.
(B) Classification of U.S. status, U.S. address, or U.S. telephone number.
(*1*) Presumption of individual's foreign status.
(*2*) Presumption of entity's foreign status.
(C) U.S. place of birth.
(*1*) Accounts opened on or after January 1, 2014.
(*2*) Preexisting obligations.
(D) Standing instructions.
(E) Standards of knowledge applicable to certain types of documentary evidence.
(*1*) Financial statement.
(*2*) Organizational documents.
(v) Specific standards of knowledge applicable when only documentary evidence is a code or classification described in paragraph (c)(5)(ii)(B) of this section.
(A) U.S. indicia for entities.
(B) Documentation required to cure U.S. indicia.
(vi) Specific standards of knowledge applicable to documentation received from intermediaries and flow-through entities.
(A) In general.
(B) Limits on reason to know with respect to documentation received from participating FFIs and registered deemed-compliant FFIs that are intermediaries or flow-through entities.
(vii) Limits on reason to know.
(A) Scope of review for preexisting obligations of entities.
(B) Reason to know there is a U.S. telephone number associated with a preexisting obligation.
(C) Reason to know there are U.S. indicia associated with preexisting offshore obligations.
(D) Limits on reason to know for multiple obligations belonging to a single account holder.
(viii) Reasonable explanation supporting claim of foreign status.
(5) Conduit financing arrangements.
(6) Additional guidance.
(f) Presumptions regarding chapter 4 status of the person receiving the payment in the absence of documentation.
(1) In general.
(2) Presumptions of classification as an individual or entity.
(i) In general.

(ii) Documentary evidence furnished for offshore obligation.
(3) Presumptions of U.S. or foreign status.
(i) Payments to entities with indicia of foreign status.
(ii) Payments to certain exempt recipients.
(iii) Payments with respect to offshore obligations.
(4) Presumption of chapter 4 status for a foreign entity.
(5) Presumption of status as an intermediary.
(6) Presumption of effectively connected income for payments to certain U.S. branches.
(7) Joint payees.
(i) In general.
(ii) Exception for offshore obligations.
(8) Rebuttal of presumptions.
(9) Effect of reliance on presumptions and of actual knowledge or reason to know otherwise.
(i) In general.
(ii) Actual knowledge or reason to know that amount of withholding is greater than is required under the presumptions or that reporting of the payment is required.
(g) Effective/applicability date.

§ 1.1471–4 FFI agreement.

(a) In general.
(1) Withholding.
(2) Identification and documentation of account holders.
(3) Reporting.
(4) Expanded affiliated group.
(5) Verification.
(6) Event of default.
(7) Refunds.
(b) Withholding requirements.
(1) In general.
(2) Withholding determination.
(3) Satisfaction of withholding requirements.
(4) Foreign passthru payments.
(5) Withholding on limited FFIs and limited branches.
(i) Limited FFIs.
(ii) Limited branches.
(6) Special rule for dormant accounts.
(7) Withholding requirements for U.S. branches of participating FFIs (and reporting Model 1 FFIs) that are treated as U.S. persons.
(c) Due diligence for the identification and documentation of account holders and payees.
(1) Scope of paragraph.
(2) General rules for the identification and documentation of account holders and payees.
(i) Overview.
(ii) Standards of knowledge.
(A) In general.
(B) Limits on reason to know with respect to certain accounts acquired in merger of bulk acquisition.
(*1*) In general.
(*2*) Participating FFIs and certain deemed-compliant FFIs that apply the due diligence rules, and U.S. financial institutions.
(iii) Change in circumstances.
(A) Obligation to identify a change in circumstances.
(B) Definition of change in circumstances.
(C) Requirements following a change in circumstances.
(iv) Record retention.
(v) Special rule for U.S. branches of participating FFIs (and reporting Model 1 FFIs) that are treated as U.S. persons.
(3) Identification and documentation procedure for entity accounts and payees.
(i) In general.
(ii) Timeframe for applying identification and documentation procedure for entity accounts and payees.
(iii) Documentation exception for certain preexisting entity accounts.
(A) Accounts to which this exception applies.
(B) Aggregation of entity accounts.
(C) Election to forgo exception.
(4) Identification and documentation procedure for individual accounts other than preexisting accounts.
(i) In general.
(ii) Reliance on third-party for identification of individual accounts other than preexisting accounts.
(iii) Alternative identification and documentation procedure for certain cash value insurance or annuity contracts.
(A) Group cash value insurance contracts or group annuity contracts.
(B) Accounts held by beneficiaries of a cash value insurance contract that is a life insurance contract.
(5) Identification and documentation procedure for preexisting individual accounts.
(i) In general.
(ii) Special rule for preexisting individual accounts previously documented as U.S. accounts for purposes of chapter 3 or 61.
(iii) Exceptions for certain low value preexisting individual accounts.
(A) Accounts to which an exception applies.
(B) Aggregation of accounts.
(C) Election to forgo exception.
(iv) Specific identification and documentation procedures for preexisting individual accounts.
(A) In general.
(B) U.S. indicia and relevant documentation rules.
(*1*) U.S. indicia.
(*2*) Documentation to be retained upon identifying U.S. indicia.
(*i*) Designation of account holder as a U.S. citizen or resident.
(*ii*) Unambiguous indication of a U.S. place of birth.
(*iii*) U.S. address or U.S. mailing address.

(*iv*) Only U.S. telephone numbers.
(*v*) U.S. telephone numbers and non-U.S. telephone numbers.
(*vi*) Standing instructions to pay amounts.
(*vii*) Power of attorney or signatory authority granted to a person with a U.S. address or ''in-care-of'' address or ''hold mail'' address.
(C) Electronic search for identifying U.S. indicia.
(D) Enhanced review for identifying U.S. indicia in the case of certain high-value accounts.
(*1*) In general.
(*2*) Relationship manager inquiry.
(*3*) Additional review of non-electronic records.
(*4*) Limitations on the enhanced review in the case of comprehensive electronically searchable information.
(E) Exception for preexisting individual accounts that a participating FFI has documented as held by foreign individuals for purposes of meeting its obligations under chapter 61 or its QI, WP, or WT agreement.
(6) Examples.
(7) Certifications of responsible officer.
(d) Account reporting.
(1) Scope of paragraph.
(2) Reporting requirements in general.
(i) Accounts subject to reporting.
(ii) Financial institution required to report an account.
(A) In general.
(B) Special reporting of account holders of territory financial institutions.
(C) Special reporting of account holders of a sponsored FFI.
(D) Special reporting of account holders that are owner-documented FFIs.
(E) Branch reporting of accounts.
(iii) Special U.S. account reporting rules for U.S. payors.
(A) Special reporting rule for U.S. payors other than U.S. branches.
(B) Special reporting rules for U.S. branches treated as U.S. persons.
(3) Reporting of accounts under section 1471(c)(1).
(i) In general.
(ii) Accounts held by specified U.S. persons.
(iii) Accounts held by U.S. owned foreign entities.
(iv) Special reporting of accounts held by owner-documented FFIs.
(v) Branch reporting.
(vi) Form for reporting accounts under section 1471(c)(1).
(vii) Time and manner of filing.
(viii) Extensions in filing.
(4) Descriptions applicable to reporting requirements of § 1.1471–4(d)(3).
(i) Address.
(ii) Account number.
(iii) Account balance or value.
(A) In general.
(B) Currency translation of account balance or value.
(iv) Payments made with respect to an account.
(A) Depository accounts.
(B) Custodial accounts.
(C) Other accounts.
(D) Transfers and closing of deposit, custodial, insurance, and annuity financial accounts.
(E) Amount and character of payments subject to reporting.
(F) Currency translation.
(v) Record retention requirements.
(5) Election to perform chapter 61 reporting.
(i) In general.
(A) Election under section 1471(c)(2).
(B) Election to report in a manner similar to section 6047(d).
(ii) Additional information to be reported.
(iii) Special reporting of accounts held by owner-documented FFIs.
(iv) Branch reporting.
(v) Time and manner of making the election.
(vi) Revocation of election.
(vii) Filing of information under election.
(6) Reporting on recalcitrant account holders.
(i) In general.
(ii) Definition of dormant account.
(iii) End of dormancy.
(iv) Forms.
(v) Time and manner of filing.
(vi) Record retention requirements.
(7) Special reporting rules with respect to the 2013 through 2015 calendar years.
(i) In general.
(ii) Participating FFIs that report under § 1.1471–4(d)(3).
(A) Reporting with respect to the 2013 and 2014 calendar years.
(B) Reporting with respect to the 2015 calendar year.
(iii) Participating FFIs that report under § 1.1471–4(d)(5).
(iv) Forms for reporting.
(A) In general.
(B) Special determination date and timing for reporting with respect to the 2013 calendar year.
(8) Reporting requirements of QIs, WPs and WTs.
(9) Examples.
(e) Expanded affiliated group requirements.
(1) In general.
(2) Limited branches.
(i) In general.
(ii) Branch defined.
(iii) Limited branch defined.
(iv) Conditions for limited branch status.
(v) Term of limited branch status (transitional).
(3) Limited FFI.
(i) In general.

(ii) Limited FFI defined.
(iii) Conditions for limited FFI status.
(iv) Period for limited FFI status (transitional).
(4) Special rule for QIs.
(f) Verification.
(1) In general.
(2) Compliance program.
(i) In general.
(ii) Consolidated compliance program.
(A) In general.
(B) Requirements of compliance FI.
(3) Certification of compliance.
(i) In general.
(ii) Certification of effective internal controls.
(iii) Qualified certification.
(iv) Material failures defined.
(4) IRS review of compliance.
(i) General inquiries.
(ii) Inquiries regarding substantial noncompliance.
(g) Event of default.
(1) Defined.
(2) Notice of event of default.
(3) Remediation of event of default.
(h) Collective credit or refund procedures for overpayments.
(1) In general.
(2) Persons for which a collective refund is not permitted.
(3) Payments for which a collective refund is permitted.
(4) Procedural and other requirements for collective refund.
(i) Legal prohibitions on reporting U.S. accounts and withholding.
(1) In general.
(2) Requesting wavier or closure of a U.S. account.
(i) In general.
(ii) Valid and effective waiver for a U.S. account.
(iii) Closure or transfer of U.S. account.
(3) Legal prohibitions preventing withholding.
(i) In general.
(ii) Block or transfer accounts or obligations.
(j) Effective/applicability date.

§ 1.1471–5 Definitions applicable to section 1471.

(a) U.S. accounts.
(1) In general.
(2) Definition of U.S. account.
(3) Account holder.
(i) In general.
(ii) Grantor trust.
(iii) Financial accounts held by agents that are not financial institutions.
(iv) Jointly held accounts.
(v) Account holder for insurance and annuity contracts.
(vi) Examples.
(4) Exceptions to U.S. account status.
(i) Exception for certain individual accounts of participating FFIs.
(ii) Election to forgo exception.
(iii) Example.
(b) Financial accounts.
(1) In general.
(i) Depository account.
(ii) Custodial account.
(iii) Equity or debt interest.
(A) Equity or debt interest in an investment entity.
(B) Certain equity or debt interests in a holding company or treasury center.
(C) Equity or debt interests in other financial institutions.
(iv) Insurance and annuity contracts.
(2) Exceptions.
(i) Certain savings accounts.
(A) Retirement and pension accounts.
(B) Non-retirement savings accounts.
(C) Rollovers.
(D) Coordination with section 6038D.
(E) Account that is tax-favored.
(ii) Certain term life insurance contracts.
(iii) Account held by an estate.
(iv) Certain escrow accounts.
(v) Certain annuity contracts.
(vi) Account or product excluded under an intergovernmental agreement.
(3) Definitions.
(i) Depository account.
(A) In general.
(B) Exceptions.
(ii) Custodial account.
(iii) Equity interest in certain entities.
(A) Partnership.
(B) Trust.
(iv) Regularly traded on an established securities market.
(v) Value of interest determined, directly or indirectly, primarily by reference to assets the give rise (or could give rise) to withholdable payments.
(A) Equity interest.
(B) Debt interest.
(vi) Redemption or retirement amount or return earned on the interest determined, directly or indirectly, primarily by reference to one or more investment entities or passive NFFEs.
(A) Equity interest.
(B) Debt interest.
(vii) Cash value insurance contracts.
(A) In general.
(B) Cash value.
(C) Amounts excluded from cash value.
(D) Policyholder dividend.
(4) Account balance or value.
(i) In general.
(ii) Special rule for immediate annuity.
(A) Immediate annuities without minimum benefit guarantees.
(B) Immediate annuities with a minimum benefit guarantee.
(C) Net present value of amounts payable in future periods.
(iii) Account aggregation requirements.
(A) In general.

(B) Aggregation rule for relationship managers.
(C) Examples.
(iv) Current translation of balance or value.
(5) Account maintained by financial institution.
(c) U.S. owned foreign entity.
(d) Definition of FFI.
(e) Definition of financial institution.
(1) In general.
(2) Banking or similar business.
(i) In general.
(ii) Exception for certain lessors and lenders.
(iii) Application of section 581.
(iv) Effect of local regulation.
(3) Holding financial assets for others as a substantial portion of its business.
(i) Substantial portion.
(A) In general.
(B) Special rule for start-up entities.
(ii) Income attributable to holding financial assets and related financial services.
(iii) Effect of local regulation.
(4) Investment entity.
(i) In general.
(ii) Financial assets.
(iii) Primarily conducts as a business.
(A) In general.
(B) Special rule start-up entities.
(iv) Primarily attributable to investing, reinvesting, or trading in financial assets.
(A) In general.
(B) Special rule for start-up entities.
(v) Examples.
(5) Exclusions.
(i) Excepted nonfinancial group entities.
(A) In general.
(B) Nonfinancial group.
(C) Holding company.
(D) Treasury center.
(E) Captive finance company.
(ii) Excepted nonfinancial start-up companies or companies entering a new line of business.
(A) In general.
(B) Exception for investment funds.
(iii) Excepted nonfinancial entities in liquidation or bankruptcy.
(iv) Excepted inter-affiliate FFI.
(v) Section 501(c) entities.
(vi) Non-profit organizations.
(6) Reserving activities of an insurance company.
(f) Deemed-compliant FFIs.
(1) Registered deemed-compliant FFIs.
(i) Registered deemed-compliant FFI categories.
(A) Local FFIs.
(B) Nonreporting members of participating FFI groups.
(C) Qualified collective investment vehicles.
(D) Restricted funds.
(E) Qualified credit card issuers.
(F) Sponsored investment entities and controlled foreign corporations.
(ii) Procedural requirements for registered deemed-compliant FFIs.
(iii) Deemed-compliant FFI that is merged or acquired.
(2) Certified deemed-compliant FFIs.
(i) Nonregistering local bank.
(ii) FFIs with only low-value accounts.
(iii) Sponsored, closely-held investment vehicles.
(iv) Limited life debt investment entities (transitional).
(3) Owner-documented FFIs.
(i) In general.
(ii) Requirements of owner-documented FFI status.
(4) Definition of restricted distributor.
(g) Recalcitrant account holders.
(1) Scope.
(2) Recalcitrant account holder.
(3) Start of recalcitrant account holder status.
(i) Preexisting accounts identified under the procedures described in §1.1471–4(c) for identifying U.S. accounts.
(A) In general.
(B) Accounts other than high-value accounts.
(C) High-value accounts.
(D) Preexisting accounts that become high-value accounts.
(ii) Accounts that are not preexisting accounts and accounts requiring name/TIN correction.
(iii) Accounts with changes in circumstances.
(4) End of recalcitrant account holder status.
(h) Passthru payment.
(1) Defined.
(2) Foreign passthru payment.
(i) Expanded affiliated group.
(1) Scope of paragraph.
(2) Expanded affiliated group defined.
(i) In general.
(ii) Partnerships and entities other than corporations.
(3) Exception for FFIs holding certain capital investments.
(4) Seed capital.
(5) Anti-abuse rule.
(j) Effective/applicability date.

§ 1.1471–6 Payments beneficially owned by exempt beneficial owners.

(a) In general.
(b) Any foreign government, any political subdivision of a foreign government, or any wholly owned agency or instrumentality of any one or more of the foregoing.
(1) Integral part.
(2) Controlled entity.
(3) Inurement to the benefit of private persons.

(c) Any international organization or any wholly owned agency or instrumentality thereof.
(d) Foreign central bank of issue.
(1) In general.
(2) Separate instrumentality.
(3) Bank for International Settlements.
(4) Income on certain collateral.
(e) Governments of U.S. territories.
(f) Certain retirement funds.
(1) Treaty-qualified retirement fund.
(2) Broad participation retirement fund.
(3) Narrow participating retirement funds.
(4) Fund formed pursuant to a plan similar to a section 401(a) plan.
(5) Investment vehicles exclusively for retirement funds.
(6) Pension fund of an exempt beneficial owner.
(7) Example.
(g) Entities wholly owned by exempt beneficial owners.
(h) Exception for commercial activities.
(1) General rule.
(2) Limitation.
(i) Effective/applicability date.

§ 1.1472–1 Withholding on NFFEs.

(a) In general.
(b) Withholdable payments made to an NFFE.
(1) In general.
(2) Transitional relief.
(c) Exceptions.
(1) Beneficial owner that is an excepted NFFE.
(i) Publicly traded corporation.
(A) Regularly traded.
(B) Special rules regarding the regularly traded requirement.
(*1*) Year of initial public offering.
(*2*) Classes of stock treated as meeting the regularly traded requirement.
(*3*) Anti-abuse rule.
(C) Established securities market.
(*1*) In general.
(*2*) Foreign exchange with multiple tiers.
(*3*) Computation of dollar value of stock traded.
(ii) Certain affiliated entities related to a publicly traded corporation.
(iii) Certain territory entities.
(iv) Active NFFEs.
(A) Passive income.
(B) Exceptions from passive income treatment.
(C) Methods of measuring assets.
(v) Excepted nonfinancial entities.
(2) Payments made to a WP, WT, or an exempt beneficial owner.
(d) Rules for determining payee and beneficial owner.
(1) In general.
(2) Payments made to an NFFE that is a WP or WT.
(3) Payments made to a partner or beneficiary of an NFFE that is an NWP or NWT.
(4) Payments made to a beneficial owner that is an NFFE.
(5) Absence of valid documentation.
(e) Information reporting requirements.
(1) Reporting on withholdable payments.
(2) Reporting on substantial U.S. owners.
(f) Effective/applicability date.

§ 1.1473–1 Section 1473 definitions.

(a) Definition of withholdable payment.
(1) In general.
(2) U.S. source FDAP income defined.
(i) In general.
(A) FDAP income defined.
(B) U.S. source.
(C) Exceptions to withholding on U.S. source FDAP income not applicable under chapter 4.
(ii) Special rule for certain interest.
(iii) Original issue discount.
(iv) REMIC residual interests.
(v) Withholding liability of payee that is satisfied by withholding agent.
(vi) Special rule for sales of interest bearing debt obligations.
(vii) Payment of U.S. source FDAP income.
(A) Amount of payment of U.S. source FDAP income.
(B) When payment of U.S. source FDAP income is made.
(3) Gross proceeds defined.
(i) Sale or other disposition.
(A) In general.
(B) Special rule for sales effected by brokers.
(C) Special rule for gross proceeds from sales settles by a clearing organization.
(ii) Property of a type that can produce interest or dividend payments that would be U.S. source FDAP income.
(A) In general.
(B) Contracts producing dividend equivalent payments.
(C) Regulated investment company distributions.
(iii) Payment of gross proceeds.
(A) When gross proceeds are paid.
(B) Amount of gross proceeds.
(4) Payments not treated as withholdable payments.
(i) Certain short-term obligations.
(ii) Effectively connected income.
(iii) Excluded nonfinancial payments.
(iv) Gross proceeds from sales of excluded property.
(v) Fractional shares.
(vi) Offshore payments of U.S. source FDAP income prior to 2017 (transitional).
(5) Special payment rules for flow-through entities, complex trusts, and estates.
(i) In general.
(ii) Partnerships.
(iii) Simple trusts.
(iv) Complex trusts and estates.
(v) Grantor trusts.
(vi) Special rule for an NWP or NWT.

(vii) Special rules for determining when gross proceeds are treated as paid to a partner, owner, or beneficiary of a flow-through entity.
(6) Reporting of withholdable payments.
(7) Example.
(b) Substantial U.S. owner.
(1) Definition.
(2) Indirect ownership of foreign entities.
(i) Indirect ownership of stock.
(ii) Indirect ownership in a foreign partnership or ownership of a beneficial interest in a foreign trust.
(iii) Ownership and holdings through options.
(iv) Determination of proportionate interest.
(v) Interests owned or held by a related person.
(3) Beneficial interest in a foreign trust.
(i) In general.
(ii) Determining the 10 percent threshold in the case of a beneficial interest in a foreign trust.
(4) Exceptions.
(i) De minimis amount or value exception.
(ii) Trusts wholly owned by certain U.S. persons.
(5) Special rule for certain financial institutions.
(6) Determination dates for substantial U.S. owners.
(7) Examples.
(c) Specified U.S. person.
(d) Withholding agent.
(1) In general.
(2) Participating FFIs and registered deemed-compliant FFIs as withholding agents.
(3) Grantor trusts as withholding agents.
(4) Deposit and return requirements.
(5) Multiple withholding agents.
(6) Exception for certain individuals.
(e) Foreign entity.
(f) Effective/applicability date.

§ 1.1474–1 Liability for withheld tax and withholding agent reporting.

(a) Payment and returns of tax withheld.
(1) In general.
(2) Withholding agent liability.
(3) Use of agents.
(i) In general.
(ii) Authorized agent.
(iii) Liability of withholding agent acting through an agent.
(4) Liability for failure to obtain documentation timely or to act in accordance with applicable presumptions.
(i) In general.
(ii) Withholding satisfied by another withholding agent.
(b) Payment of withheld tax.
(1) In general.
(2) Special rule for foreign passthru payments and payments of gross proceeds that include an undetermined amount of income subject to tax.
(c) Income tax return.
(1) In general.
(2) Participating FFIs, registered deemed-compliant FFIs, and U.S. branches treated as U.S. persons.
(3) Amended returns.
(d) Information returns for payment reporting.
(1) Filing requirement.
(i) In general.
(ii) Recipient.
(A) Defined.
(B) Persons that are not recipients.
(2) Amounts subject to reporting.
(i) In general.
(ii) Exception to reporting.
(iii) Coordination with chapter 3.
(3) Required information.
(4) Method of reporting.
(i) Payments by U.S. withholding agent to recipients.
(A) Payments to certain entities that are beneficial owners.
(B) Payments to participating FFIs, deemed-compliant FFIs, and certain QIs.
(C) Amounts paid to a U.S. branch of a participating FFI or registered deemed-compliant FFI.
(D) Amounts paid to territory financial institutions that are flow-through entities or acting as intermediaries.
(E) Amounts paid to NFFEs.
(ii) Payments made by withholding agents to certain entities that are not recipients.
(A) Entities that provide information for a withholding agent to perform specific payee reporting.
(B) Nonparticipating FFI that is a flow-through entity or intermediary.
(C) Disregarded entities.
(iii) Reporting by participating FFIs and deemed-compliant FFIs (including QIs, WPs, and WTs).
(A) In general.
(B) Special reporting requirements of participating FFIs, deemed-compliant FFIs, and FFIs that make an election under section 1471(b)(3).
(C) Reporting by participating FFIs and registered deemed-compliant FFIs (including QIs, WPs, and WTs) for certain payments made to nonparticipating FFIs (transitional).
(D) Reporting by U.S. branches of a participating FFI or registered deemed-compliant FFI that is treated as a U.S. person.
(iv) Reporting by territory financial institutions.
(v) Nonparticipating FFIs.
(vi) Other withholding agents.
(e) Magnetic media reporting.
(f) Indemnification of withholding agent.
(g) Extensions of time to file Forms 1042 and 1042–S.
(h) Penalties.

(i) Additional reporting requirements with respect to U.S. owned foreign entities and owner-documented FFIs.
(1) Reporting by certain withholding agents with respect to owner-documented FFIs.
(2) Reporting by certain withholding agents with respect to U.S. owned foreign entities that are NFFEs.
(3) Cross reference to reporting by participating FFIs.
(j) Effective/applicability date.

§ 1.1474–2 Adjustments for overwithholding or underwithholding of tax.

(a) Adjustments of overwithheld tax.
(1) In general.
(2) Overwithholding.
(3) Reimbursement of tax.
(i) General rule.
(ii) Record maintenance.
(4) Set-offs.
(5) Examples.
(b) Withholding of additional tax when underwithholding occurs.
(c) Effective/applicability date.

§ 1.1474–3 Withheld tax as credit to beneficial owner of income.

(a) Creditable tax.
(b) Amounts paid to persons that are not the beneficial owners.
(c) Effective/applicability date.

§ 1.1474–4 Tax paid only once.

(a) Tax paid.
(b) Effective/applicability date.

§ 1.1474–5 Refunds or credits.

(a) Refund and credit.
(1) In general.
(2) Limitation to refund and credit for a nonparticipating FFI.
(3) Requirement to provide additional documentation for certain beneficial owners.
(i) In general.
(ii) Claim of reduced withholding under an income tax treaty.
(iii) Additional documentation to be furnished to the IRS for certain NFFEs.
(b) Tax repaid to payee.
(c) Effective/applicability date.

§ 1.1474–6 Coordination of chapter 4 with other withholding provisions.

(a) In general.
(b) Coordination of withholding for amounts subject to withholding under sections 1441, 1442, and 1443.
(1) In general.
(2) When withholding is applied.
(3) Special rule for certain substitute dividend payments.
(c) Coordination with amounts subject to withholding under section 1445.
(1) In general.
(2) Determining amount of distribution from certain domestic corporations subject to section 1445 or chapter 4 withholding.
(i) Distribution from qualified investment entity.
(ii) Distribution from a United States real property holding corporation.
(d) Coordination with section 1446.
(1) In general.
(2) Determining the amount of distribution subject to section 1446.
(e) Example.
(f) Effective/applicability date.

§ 1.1474–7 Confidentiality of information.

(a) Confidentiality of information.
(b) Exception for disclosure of participating FFIs.
(c) Effective/applicability date.

§ 301.1474–1 Required use of magnetic media for financial institutions filing Form 1042–S or Form 8966.

(a) Financial institutions filing certain information returns.
(b) Waiver.
(c) Failure to file.
(d) Meaning of terms.
(1) Magnetic media.
(2) Financial institution.
(e) Effective/applicability date.

[T.D. 9610, 78 FR 5899, Jan. 28, 2013; 78 FR 55203, Sept. 10, 2013]

§ 1.1471–1 Scope of chapter 4 and definitions.

(a) *Scope of chapter 4 of the Internal Revenue Code.* Sections 1.1471–1 through 1.1474–7 provide rules for withholding when a withholding agent makes a payment to an FFI or NFFE and prescribe the requirements for and definitions relevant to FFIs and NFFEs to which withholding will not apply. Section 1.1471–1 provides definitions for terms used in chapter 4 of the Internal Revenue Code (Code) and the regulations thereunder. Section 1.1471–2 provides rules for withholding under section 1471(a) on payments to FFIs, including the exception from withholding for payments made with respect to certain grandfathered obligations. Section 1.1471–3 provides rules for determining the payee of a payment and the documentation requirements to establish a payee's chapter 4 status. Section 1.1471–4 describes the requirements of an FFI agreement under section 1471(b) and the application of sections 1471(b) and (c) to an expanded affiliated group of FFIs. Section 1.1471–5 defines terms

relevant to section 1471 and the FFI agreement and defines categories of FFIs that will be deemed to have met the requirements of section 1471(b) pursuant to section 1471(b)(2). Section 1.1471–6 defines classes of beneficial owners of payments that are exempt from withholding under chapter 4. Section 1.1472–1 provides rules for withholding when a withholding agent makes a payment to an NFFE, and defines categories of NFFEs that are not subject to withholding. Section 1.1473–1 provides definitions of the statutory terms in section 1473. Section 1.1474–1 provides rules relating to a withholding agent's liability for withheld tax, filing of income tax and information returns, and depositing of tax withheld. Section 1.1474–2 provides rules relating to adjustments for overwithholding and underwithholding of tax. Section 1.1474–3 provides the circumstances in which a credit is allowed to a beneficial owner for a withheld tax. Section 1.1474–4 provides that a chapter 4 withholding obligation need only be collected once. Section 1.1474–5 contains rules relating to credits and refunds of tax withheld. Section 1.1474–6 provides rules coordinating withholding under sections 1471 and 1472 with withholding provisions under other sections of the Code. Section 1.1474–7 provides the confidentiality requirement for information obtained to comply with the requirements of chapter 4. Any reference in the provisions of sections 1471 through 1474 to an amount that is stated in U.S. dollars includes the foreign currency equivalent of that amount. Except as otherwise provided, the provisions of sections 1471 through 1474 and the regulations thereunder apply only for purposes of chapter 4. See § 301.1474–1 of this chapter for the requirements for reporting on magnetic media that apply to financial institutions making payments or otherwise reporting accounts pursuant to chapter 4.

(b) *Definitions*. Except as otherwise provided in this paragraph (b) or under the terms of an applicable Model 2 IGA, the following definitions apply for purposes of sections 1471 through 1474 and the regulations under those sections.

(1) *Account*. The term *account* means a financial account as defined in § 1.1471–5(b).

(2) *Account holder*. The term *account holder* means the person who holds an account, as determined under § 1.1471–5(a)(3).

(3) *Active NFFE*. The term *active NFFE* has the meaning set forth in § 1.1472–1(c)(1)(iv).

(4) *AML due diligence*. The term *AML due diligence* means the customer due diligence procedures of a financial institution pursuant to the anti-money laundering or similar requirements to which the financial institution, or branch thereof, is subject. This includes identifying the customer (including the owners of the customer), understanding the nature and purpose of the account, and ongoing monitoring.

(5) *Annuity contract*. The term *annuity contract* means a contract under which the issuer agrees to make payments for a period of time determined in whole or in part by reference to the life expectancy of one or more individuals. The term also includes a contract that is considered to be an annuity contract in accordance with the law, regulation, or practice of the jurisdiction in which the contract was issued, and under which the issuer agrees to make payments for a term of years. For purposes of the preceding sentence, it is immaterial whether a contract satisfies any of the substantive U.S. tax rules (for example, sections 72(s), 72(u), 817(h), and the investor control prohibition) applicable to the taxation of a contract holder or issuer.

(6) *Assumes primary withholding responsibility*. The term *assumes primary withholding responsibility* means that a QI, territory financial institution, or U.S. branch of a participating FFI or registered deemed-compliant FFI that assumes responsibility for withholding on a payment for purposes of chapters 3 and 4 as if it were a U.S. person. A QI may only assume primary withholding responsibility if it does not make an election to be withheld upon with respect to the payment.

(7) [Reserved] For further guidance, see § 1.1471–1T(b)(7).

(8) *Beneficial owner*. Except as provided in § 1.1472–1(d), § 1.1471–6(d)(4), and

§ 1.1471–6(f), the term *beneficial owner* has the meaning set forth in § 1.1441–1(c)(6).

(9) *Blocked account*. The term *blocked account* has the meaning set forth in § 1.1471–4(e)(2)(iii)(B).

(10) [Reserved] For further guidance, see § 1.1471–1T(b)(10).

(11) *Broker*. The term *broker* means any person, U.S. or foreign, that, in the ordinary course of a trade or business during the calendar year, stands ready to effect sales to be made by others. Examples of a broker include an obligor that regularly issues and retires its own debt obligations, a corporation that regularly redeems its own stock, and a clearing organization that effects sales of securities for its members. A broker does not include an international organization described in § 1.1471–6(c) that redeems or retires an obligation of which it is the issuer, a stock transfer agent that records transfers of stock for a corporation if the nature of the activities of the agent is such that the agent ordinarily would not know the gross proceeds from sales, an escrow agent that effects no sales other than transactions incidental to the purpose of the escrow (such as sales to collect on collateral), or a corporation that issues and retires long-term debt on an irregular basis.

(12) *Cash value*. The term *cash value* has the meaning set forth in § 1.1471–5(b)(3)(vii)(B).

(13) *Cash value insurance contract*. The term *cash value insurance contract* has the meaning set forth in § 1.1471–5(b)(3)(vii).

(14) *Certified deemed-compliant FFI*. The term *certified deemed-compliant FFI* means an FFI described in § 1.1471–5(f)(2).

(15) *Change in circumstances*. The term *change in circumstances* has the meaning set forth in § 1.1471–3(c)(6)(ii)(E) for withholding agents and, in the case of a participating FFI, has the meaning set forth in § 1.1471–4(c)(2)(iii).

(16) *Chapter 3*. For purposes of chapter 4, the term *chapter 3* means sections 1441 through 1464 and the regulations thereunder, but does not include sections 1445 and 1446 and the regulations thereunder, unless the context indicates otherwise.

(17) *Chapter 4*. The term *chapter 4* means sections 1471 through 1474 and the regulations thereunder.

(18) *Chapter 4 reportable amount*. The term *chapter 4 reportable amount* has the meaning set forth in § 1.1474–1(d)(2)(i).

(19) *Chapter 4 status*. The term *chapter 4 status* means a person's status as a U.S. person, a specified U.S. person, an individual that is a foreign person, a participating FFI, a deemed-compliant FFI, a restricted distributor, an exempt beneficial owner, a nonparticipating FFI, a territory financial institution, an excepted NFFE, or a passive NFFE.

(20) [Reserved] For further guidance, see § 1.1471–1T(b)(20).

(21) *Clearing organization*. The term *clearing organization* means an entity that is in the business of holding securities for its member organizations or clearing trades of securities and transferring, or instructing the transfer of, securities by credit or debit to the account of a member without the necessity of physical delivery of the securities.

(22) *Complex trust*. A *complex trust* is a trust that is not a simple trust or a grantor trust.

(23) [Reserved] For further guidance, see § 1.1471–1T(b)(23).

(24) *Custodial account*. The term *custodial account* has the meaning set forth in § 1.1471–5(b)(3)(ii).

(25) *Custodial institution*. The term *custodial institution* has the meaning set forth in § 1.1471–5(e)(1)(ii).

(26) *Customer master file*. A *customer master file* includes the primary files of a withholding agent, participating FFI, or deemed-compliant FFI for maintaining account holder information, such as information used for contacting account holders and for satisfying AML due diligence.

(27) *Deemed-compliant FFI*. The term *deemed-compliant FFI* means an FFI that is treated, pursuant to section 1471(b)(2) and § 1.1471–5(f), as meeting the requirements of section 1471(b). The term *deemed-compliant FFI* also includes a QI branch of a U.S. financial institution that is a reporting Model 1 FFI.

(28) *Deferred annuity contract*. The term *deferred annuity contract* means an

annuity contract other than an immediate annuity contract.

(29) *Depository account*. The term *depository account* has the meaning set forth in § 1.1471–5(b)(3)(i).

(30) *Depository institution*. The term *depository institution* has the meaning set forth in § 1.1471–5(e)(1)(i).

(31) [Reserved] For further guidance, see § 1.1471–1T(b)(31).

(32) *Documentary evidence*. The term *documentary evidence* means documents, other than a withholding certificate or written statement, that a withholding agent is permitted to rely upon to determine the chapter 4 status of a person in accordance with § 1.1471–3(c)(5).

(33) *Documentation*. The term *documentation* means withholding certificates, written statements, documentary evidence, and other documents that may be relevant in determining a person's chapter 4 status, including any document containing a determination of the account holder's citizenship or residency for tax or AML due diligence purposes or an account holder's claim of citizenship or residency for tax or AML due diligence purposes.

(34) *Dormant account*. The term *dormant account* has the meaning set forth in § 1.1471–4(d)(6)(ii).

(35) [Reserved] For further guidance, see § 1.1471–1T(b)(35).

(36) *EIN*. The term *EIN* means an employer identification number (also known as a federal tax identification number) described in § 301.6109–1(a)(1)(i) of this chapter.

(37) *Election to be withheld upon*. The term *election to be withheld upon* has the meaning set forth in § 1.1471–2(a)(2)(iii).

(38) *Electronically searchable information*. The term *electronically searchable information* means information that a withholding agent or FFI maintains in its tax reporting files, customer master files, or similar files, and that is stored in the form of an electronic database against which standard queries in programming languages, such as Structured Query Language, may be used. Information, data, or files are not electronically searchable merely because they are stored in an image retrieval system (such as portable document format (.pdf) or scanned documents).

(39) *Entity*. The term *entity* means any person other than an individual.

(40) *Entity account*. The term *entity account* means an account held by one or more entities.

(41) [Reserved] For further guidance, see § 1.1471–1T(b)(41).

(42) *Exempt beneficial owner*. The term *exempt beneficial owner* means any person described in § 1.1471–6(b) through (g) or that is otherwise treated as an exempt beneficial owner pursuant to a Model 1 IGA or Model 2 IGA.

(43) [Reserved] For further guidance, see § 1.1471–1T(b)(43).

(44) *Expanded affiliated group*. The term *expanded affiliated group* has the meaning set forth in § 1.1471–5(i)(2).

(45) *FATF*. The term *FATF* means the Financial Action Task Force, an intergovernmental body that develops and promotes international policies to combat money laundering and terrorist financing.

(46) *FATF-compliant jurisdiction*. The term *FATF-compliant jurisdiction* means a jurisdiction that—

(i) Is not subject to a FATF call on its members and other jurisdictions to apply counter-measures to protect the international financial system from the on-going and substantial money laundering and terrorist financing risks emanating from the jurisdiction;

(ii) Is not a jurisdiction with strategic AML/CFT (anti-money laundering and combating the financing of terrorism) deficiencies that has not made sufficient progress in addressing the deficiencies or has not committed to an action plan developed with the FATF to address the deficiencies; and

(iii) Is not a jurisdiction with strategic AML/CFT deficiencies that the FATF has identified as not making sufficient progress on its action plan agreed upon with the FATF.

(47) *FFI*. The term *FFI* or *foreign financial institution* has the meaning set forth in § 1.1471–5(d).

(48) [Reserved] For further guidance, see § 1.1471–1T(b)(48).

(49) *Financial account*. The term *financial account* has the meaning set forth in § 1.1471–5(b).

(50) [Reserved] For further guidance, see § 1.1471–1T(b)(50).

(51) *Flow-through entity*. The term *flow-through entity* means a partnership, simple trust, or grantor trust, as determined under U.S. tax principles.

(52) *Flow-through withholding certificate*. The term *flow-through withholding certificate* means a Form W–8IMY submitted by a foreign partnership, foreign simple trust, or foreign grantor trust.

(53) *Foreign entity*. The term *foreign entity* has the meaning set forth in § 1.1473–1(e).

(54) *Foreign passthru payment*. The term *foreign passthru payment* has the meaning set forth in § 1.1471–5(h)(2).

(55) *Foreign payee*. The term *foreign payee* means any payee other than a U.S. payee.

(56) *Foreign person*. The term *foreign person* means any person other than a U.S. person and includes a QI branch of a U.S. financial institution.

(57) *GIIN*. The term *GIIN* or *Global Intermediary Identification Number* means the identification number that is assigned to a participating FFI or registered deemed-compliant FFI. The term *GIIN* or *Global Intermediary Identification Number* also includes the identification number assigned to a reporting Model 1 FFI for purposes of identifying such entity to withholding agents. All GIINs will appear on the IRS FFI list.

(58) *Grandfathered obligation*. The term *grandfathered obligation* has the meaning set forth in § 1.1471–2(b).

(59) *Grantor trust*. A *grantor trust* is a trust with respect to which one or more persons are treated as owners of all or a portion of the trust under sections 671 through 679. If only a portion of the trust is treated as owned by a person, that portion is a grantor trust with respect to that person.

(60) *Gross proceeds*. The term *gross proceeds* has the meaning set forth in § 1.1473–1(a)(3).

(61) *Group annuity contract*. The term *group annuity contract* means an annuity contract under which the obligees are individuals who are affiliated through an employer, trade association, labor union, or other association or group.

(62) *Group insurance contract*. The term *group insurance contract* means an insurance contract that—

(i) Provides coverage on individuals who are affiliated through an employer, trade association, labor union, or other association or group; and

(ii) Charges a premium for each member of the group (or member of a class within the group) that is determined without regard to the individual health characteristics other than age, gender, and smoking habits of the member (or class of members) of the group.

(63) *Immediate annuity*. The term *immediate annuity* means an annuity contract that—

(i) Is purchased with a single premium or annuity consideration; and

(ii) No later than one year from the purchase date of the contract commences to pay annually or more frequently substantially equal periodic payments.

(64) *Individual account*. The term *individual account* means an account held by one or more individuals.

(65) *Insurance company*. The term *insurance company* means an entity or arrangement—

(i) That is regulated as an insurance business under the laws, regulations, or practices of any jurisdiction in which the company does business;

(ii) The gross income of which (for example, gross premiums and gross investment income) arising from insurance, reinsurance, and annuity contracts for the immediately preceding calendar year exceeds 50 percent of total gross income for such year; or

(iii) The aggregate value of the assets of which associated with insurance, reinsurance, and annuity contracts at any time during the immediately preceding calendar year exceeds 50 percent of total assets at any time during such year.

(66) *Insurance contract*. The term *insurance contract* means a contract (other than an annuity contract) under which the issuer in exchange for consideration agrees to pay an amount upon the occurrence of a specified contingency involving mortality, morbidity, accident, liability, or property risk.

(67) [Reserved] For further guidance, see § 1.1471–1T(b)(67).

(68) *Intermediary*. The term *intermediary* has the meaning set forth in § 1.1441–1(c)(13).

(69) *Intermediary withholding certificate*. The term *intermediary withholding certificate* means a Form W–8IMY submitted by an intermediary.

(70) *Investment entity*. The term *investment entity* has the meaning set forth in § 1.1471–5(e)(1)(iii).

(71) *Investment-linked annuity contract*. The term *investment-linked annuity contract* means an annuity contract under which benefits or premiums are adjusted to reflect the investment return or market value of assets associated with the contract.

(72) *Investment-linked insurance contract*. The term *investment-linked insurance contract* means an insurance contract under which benefits, premiums, or the period of coverage are adjusted to reflect the investment return or market value of assets associated with the contract.

(73) *IRS FFI list*. The term *IRS FFI list* means the list published by the IRS that contains the names and GIINs for all participating FFIs, registered deemed-compliant FFIs, and reporting Model 1 FFIs.

(74) *Life annuity contract*. The term *life annuity contract* means an annuity contract that provides for payments over the life or lives of one or more individuals.

(75) *Life insurance contract*. The term *life insurance contract* means an insurance contract under which the issuer, in exchange for consideration, agrees to pay an amount upon the death of one or more individuals. That a contract provides one or more payments (for example, for endowment benefits or disability benefits) in addition to a death benefit will not cause the contract to be other than a life insurance contract. For purposes of the preceding sentence, it is immaterial whether a contract satisfies any of the substantive U.S. tax rules (for example, sections 101(f), 817(h), 7702, or investor control prohibition) applicable to the taxation of the contract holder or issuer.

(76) [Reserved] For further guidance, see § 1.1471–1T(b)(76).

(77) [Reserved] For further guidance, see § 1.1471–1T(b)(77).

(78) *Model 1 IGA*. The term *Model 1 IGA* means an agreement or arrangement between the United States or the Treasury Department and a foreign government or one or more agencies thereof to implement FATCA through reporting by financial institutions to such foreign government or agency thereof, followed by automatic exchange of the reported information with the IRS. The IRS will publish a list identifying all countries that are treated as having in effect a Model 1 IGA.

(79) *Model 2 IGA*. The term *Model 2 IGA* means an agreement or arrangement between the United States or the Treasury Department and a foreign government or one or more agencies thereof to facilitate the implementation of FATCA through reporting by financial institutions directly to the IRS in accordance with the requirements of an FFI agreement, supplemented by the exchange of information between such foreign government or agency thereof and the IRS. The IRS will publish a list identifying all countries that are treated as having in effect a Model 2 IGA.

(80) *NFFE*. The term *NFFE* or *non-financial foreign entity* means a foreign entity that is not a financial institution (including a territory NFFE). The term also means a foreign entity treated as an NFFE pursuant to a Model 1 IGA or Model 2 IGA.

(81) [Reserved] For further guidance, see § 1.1471–1T(b)(81).

(82) *Nonparticipating FFI*. The term *nonparticipating FFI* means an FFI other than a participating FFI, a deemed-compliant FFI, or an exempt beneficial owner.

(83) [Reserved] For further guidance, see § 1.1471–1T(b)(83).

(84) *Non-U.S. account*. The term *non-U.S. account* means an account that is not a U.S. account and that does not have an account holder that is a nonparticipating FFI or recalcitrant account holder.

(85) *NQI*. The term *NQI* or *nonqualified intermediary* has the meaning set forth in § 1.1441–1(c)(14).

(86) *NWP*. The term *NWP* or *nonwithholding foreign partnership* means a foreign partnership that is not a withholding foreign partnership.

(87) *NWT*. The term *NWT* or *nonwithholding foreign trust* means a foreign trust as defined in section 7701(a)(31)(B) that is a simple trust or grantor trust and is not a withholding foreign trust.

(88) [Reserved] For further guidance, see § 1.1471–1T(b)(88).

(89) *Owner*. The term *owner* means a person described in § 1.1473–1(b)(1), without regard to whether such person is a U.S. person and without regard to whether such person owns a ten percent interest in the entity. The term also includes a person that owns a discretionary interest in a trust and receives a distribution during the calendar year.

(90) *Owner-documented FFI*. The term *owner-documented FFI* means an FFI described in § 1.1471–5(f)(3).

(91) [Reserved] For further guidance, see § 1.1471–1T(b)(91).

(92) *Participating FFI group*. The term *participating FFI group* means an expanded affiliated group that includes one or more participating FFIs and meets the requirements of § 1.1471–4(e)(1). The term *participating FFI group* also means an expanded affiliated group in which one or more members of the group is a reporting Model 1 FFI and each member of the group that is an FFI is a registered deemed-compliant FFI, nonreporting IGA FFI, limited FFI, or retirement fund described in § 1.1471–6(f).

(93) *Partnership*. The term *partnership* has the meaning set forth in § 301.7701–2(c)(1) of this chapter.

(94) *Passive NFFE*. The term *passive NFFE* means an NFFE other than an excepted NFFE.

(95) *Passthru payment*. The term *passthru payment* has the meaning set forth in § 1.1471–5(h).

(96) *Payee*. The term *payee* has the meaning set forth in § 1.1471–3(a).

(97) *Payment with respect to an offshore obligation*. The term *payment with respect to an offshore obligation* means a payment made outside of the United States, within the meaning of § 1.6049–5(e), with respect to an offshore obligation.

(98) [Reserved] For further guidance, see § 1.1471–1T(b)(98).

(99) *Permanent residence address*. The term *permanent residence address* is the address in the country of which the person claims to be a resident for purposes of that country's income tax. The address of a financial institution with which the person maintains an account, a post office box, or an address used solely for mailing purposes is not a permanent residence address unless such address is the only permanent address used by the person and appears as the person's registered address in the person's organizational documents. Further, an address that is provided subject to instructions to hold all mail to that address is not a permanent residence address. If the person is an individual who does not have a tax residence in any country, the permanent address is the place at which the person normally resides. If the person is an entity and does not have a tax residence in any country, then the permanent residence address is the place at which the person maintains its principal office.

(100) [Reserved] For further guidance, see § 1.1471–1T(b)(100).

(101) *Preexisting account*. The term *preexisting account* means a financial account that is a preexisting obligation.

(102) *Preexisting entity account*. The term *preexisting entity account* means a preexisting account held by one or more entities.

(103) *Preexisting individual account*. The term *preexisting individual account* means a preexisting account held by one or more individuals.

(104) *Preexisting obligation*—(i) [Reserved] For further guidance, see § 1.1471–1T(b)(104)(i).

(ii) The term *preexisting obligation* also includes any obligation (referring to an account, instrument, contract, debt, or equity interest) of an account holder or payee, regardless of the date such obligation was entered into, if—

(A) [Reserved] For further guidance, see § 1.1471–1T(b)(104)(ii)(A).

(B) [Reserved] For further guidance, see § 1.1471–1T(b)(104)(ii)(B).

(C) [Reserved] For further guidance, see § 1.1471–1T(b)(104)(ii)(C).

(105) [Reserved] For further guidance, see § 1.1471–1T(b)(105).

(106) *Prima facie FFI*. The term *prima facie FFI* means an entity described in § 1.1471–2(a)(4)(ii)(B).

(107) *QI*. The term *QI* or *qualified intermediary* has the meaning set forth in § 1.1441–1(e)(5)(ii).

(108) *QI agreement*. The term *QI agreement* means the agreement described in § 1.1441–1(e)(5)(iii).

(109) *QI branch of a U.S. financial institution*. The term *QI branch of a U.S. financial institution* means a foreign branch of a U.S. financial institution for which a QI agreement is in effect.

(110) *Recalcitrant account holder*. The term *recalcitrant account holder* has the meaning set forth in § 1.1471–5(g).

(111) *Registered deemed-compliant FFI*. The term *registered deemed-compliant FFI* means an FFI described in § 1.1471–5(f)(1). The term *registered deemed-compliant FFI* also includes a QI branch of a U.S. financial institution that is a reporting Model 1 FFI.

(112) *Relationship manager*. A *relationship manager* is an officer or other employee of an FFI who is assigned responsibility for specific account holders on an on-going basis (including as an officer or employee that is a member of an FFI's private banking department), advises account holders regarding their banking, investment, trust, fiduciary, estate planning, or philanthropic needs, and recommends, makes referrals to, or arranges for the provision of financial products, services, or other assistance by internal or external providers to meet those needs. Notwithstanding the previous sentence, a person is only a relationship manager with respect to an account that has a balance or value of more than $1,000,000, taking into account the aggregation rules described in § 1.1471–5(b)(4)(iii)(A) and (B).

(113) [Reserved] For further guidance, see § 1.1471–1T(b)(113).

(114) *Reporting Model 1 FFI*. The term *reporting Model 1 FFI* means an FFI with respect to which a foreign government or agency thereof agrees to obtain and exchange information pursuant to a Model 1 IGA, other than an FFI that is treated as a nonparticipating FFI under the Model 1 IGA.

(115) [Reserved] For further guidance, see § 1.1471–1T(b)(115).

(116) *Responsible officer*. The term *responsible officer* means, with respect to a participating FFI, an officer of any participating FFI or reporting Model 1 FFI in the participating FFI's expanded affiliated group with sufficient authority to fulfill the duties of a responsible officer described in § 1.1471–4, which include the requirement to periodically certify to the IRS regarding the FFI's compliance with its FFI agreement. The term *responsible officer* means, in the case of a registered deemed-compliant FFI, an officer of any deemed-compliant FFI or participating FFI in the deemed-compliant FFI's expanded affiliated group with sufficient authority to ensure that the FFI meets the applicable requirements of § 1.1471–5(f). If a participating FFI elects to be part of a consolidated compliance program, the term *responsible officer* means an officer of the compliance FI (as described in § 1.1471–4(f)) with sufficient authority to fulfill the duties of a responsible officer described in § 1.1471–4(f)(2) and (3) on behalf of each FFI in the compliance group.

(117) *Restricted distributor*. The term *restricted distributor* means an entity described in § 1.1471–5(f)(4).

(118) *Simple trust*. The term *simple trust* means a trust that meets the requirements of section 651(a)(1) and (2).

(119) *Specified insurance company*. The term *specified insurance company* has the meaning set forth in § 1.1471–5(e)(1)(iv).

(120) *Specified U.S. person*. The term *specified U.S. person* or *specified United States person* has the meaning set forth in § 1.1473–1(c).

(121) *Sponsored FFI*. The term *sponsored FFI* means any entity described in § 1.1471–5(f)(1)(i)(F) (sponsored investment entities and sponsored controlled foreign corporations) or § 1.1471–5(f)(2)(iii) (sponsored, closely held investment vehicles).

(122) *Sponsored FFI group*. The term *sponsored FFI group* means a group of sponsored FFIs that share the same sponsoring entity.

(123) [Reserved] For further guidance, see § 1.1471–1T(b)(123).

(124) [Reserved] For further guidance, see § 1.1471–1T(b)(124).

(125) [Reserved] For further guidance, see § 1.1471–1T(b)(125).

(126) *Standing instructions to pay amounts*. The term *standing instructions to pay amounts* means current payment instructions provided by the account

holder, or an agent of the account holder, that will repeat without further instructions being provided by the account holder. Therefore, for example, a payment instruction to make an isolated payment is not a standing instruction to pay amounts, even if the instructions are given one year in advance. However, an instruction to make payments indefinitely is a standing instruction to pay amounts for the period during which such instructions are in effect, even if such instructions are amended after a single payment.

(127) *Subject to withholding*. The term *subject to withholding*, with respect to an amount, means an amount for which withholding is required under chapter 4 or an amount for which chapter 4 withholding was otherwise applied.

(128) [Reserved] For further guidance, see §1.1471–1T(b)(128).

(129) *Territory entity*. The term *territory entity* means any entity that is incorporated or organized under the laws of any U.S. territory.

(130) *Territory financial institution*. The term *territory financial institution* means a financial institution that is incorporated or organized under the laws of any U.S. territory, not including a territory entity that is an investment entity but that is not a depository institution, custodial institution, or specified insurance company.

(131) *Territory financial institution treated as a U.S. person*. The term *territory financial institution treated as a U.S. person* means a territory financial institution that is treated as a U.S. person under §1.1471–3(a)(3)(iv).

(132) *Territory NFFE*. The term *territory NFFE* means a territory entity that is not a financial institution, including a territory entity that is an investment entity but is not a depository institution, custodial institution, or specified insurance company.

(133) *TIN*. The term *TIN* means the tax identifying number assigned to a person under section 6109.

(134) *U.S. account*. The term *U.S. account* or *United States account* has the meaning set forth in §1.1471–5(a).

(135) [Reserved] For further guidance, see §1.1471–1T(b)(135).

(136) *U.S. financial institution*. The term *U.S. financial institution* means a financial institution that is a U.S. person, including a U.S. branch treated as a U.S. person.

(137) *U.S. indicia*. The term *U.S. indicia* has the meaning set forth in §1.1471–4(c)(5)(iv)(B) when applied to an individual and as set forth in §1.1471–3(e)(4)(v)(A) when applied to an entity.

(138) *U.S. owned foreign entity*. The term *U.S. owned foreign entity* or *United States owned foreign entity* has the meaning set forth in §1.1471–5(c).

(139) *U.S. payee*. The term *U.S. payee* means any payee that is a U.S. person.

(140) *U.S. payor*. The term *U.S. payor* means a U.S. payor or U.S. middleman as defined in §1.6049–5(c)(5).

(141) [Reserved] For further guidance, see §1.1471–1T(b)(141).

(142) *U.S. source FDAP income*. The term *U.S. source FDAP income* has the meaning set forth in §1.1473–1(a)(2).

(143) *U.S. territory*. The term *U.S. territory* or *possession of the United States* means American Samoa, Guam, the Northern Mariana Islands, Puerto Rico, or the U.S. Virgin Islands.

(144) *U.S. withholding agent*. The term *U.S. withholding agent* means a withholding agent that is either a U.S. person or a U.S. branch of a foreign person.

(145) *Withholdable payment*. The term *withholdable payment* has the meaning set forth in §1.1473–1(a).

(146) *Withholding*. The term *withholding* means the deduction and remittance of tax at the applicable rate from a payment.

(147) *Withholding agent*. The term *withholding agent* has the meaning set forth in §1.1473–1(d).

(148) *Withholding certificate*. The term *withholding certificate* means a Form W–8, Form W–9, or any other certificate that under the Code or regulations certifies or establishes the chapter 4 status of a payee or beneficial owner.

(149) *WP*. The term *WP* or *withholding foreign partnership* means a foreign partnership that has executed the agreement described in §1.1441–5(c)(2)(ii).

(150) *Written statement*. The term *written statement* has the meaning set forth in §1.1471–3(c)(4).

(151) *WT*. The term *WT* or *withholding foreign trust* means a foreign grantor trust or foreign simple trust that has

executed the agreement described in § 1.1441–5(e)(5)(v).

(c) *Effective/applicability date.* This section applies January 28, 2013.

[T.D. 9610, 78 FR 5906, Jan. 28, 2013; 78 FR 55203, Sept. 10, 2013, as amended by T.D. 9657, 79 FR 12825, Mar. 6, 2014]

§ 1.1471–1T Scope of chapter 4 and definitions (temporary).

(a) [Reserved] For further guidance, see § 1.1471–1(a).

(b) [Reserved] For further guidance, see § 1.1471–1(b).

(1) through (6) [Reserved] For further guidance, see § 1.1471–1(b)(1) through (6).

(7) *Backup withholding.* The term *backup withholding* means the withholding required under section 3406.

(8) [Reserved] For further guidance, see § 1.1471–1(b)(8).

(9) [Reserved] For further guidance, see § 1.1471–1(b)(9).

(10) *Branch.* The term *branch* means a branch as defined in § 1.1471–4(e)(2)(ii).

(11) through (19) [Reserved] For further guidance, see § 1.1471–1(b)(11) through (19).

(20) *Chapter 4 withholding rate pool.* The term *chapter 4 withholding rate pool* means a pool of payees that are nonparticipating FFIs provided on a chapter 4 withholding statement (as described in § 1.1471–3(c)(3)(iii)(B)(*3*)) to which a withholdable payment is allocated. The term *chapter 4 withholding rate pool* also means a pool provided on an FFI withholding statement (as described in § 1.1471–3(c)(3)(iii)(B)(*2*)) to which a withholdable payment is allocated to—

(i) A pool of payees consisting of each class of recalcitrant account holders described in § 1.1471–4(d)(6) (or with respect to an FFI that is a QI, a single pool of recalcitrant account holders without the need to subdivide into each class of recalcitrant account holders described in § 1.1471–4(d)(6)), including a separate pool of account holders to which the escrow procedures for dormant accounts apply; or

(ii) A pool of payees that are U.S. persons as described in § 1.1471–3(c)(3)(iii)(B)(*2*).

(21) through (22) [Reserved] For further guidance, see § 1.1471–1(b)(21) through (22).

(23) *Consolidated obligations.* The term *consolidated obligations* means multiple obligations that a withholding agent (including a withholding agent that is an FFI) has chosen to treat as a single obligation in order to treat the obligations as preexisting obligations pursuant to paragraph (b)(104)(ii) of this section or in order to share documentation between the obligations pursuant to § 1.1471–3(c)(8). A withholding agent that has opted to treat multiple obligations as consolidated obligations pursuant to the previous sentence must also treat the obligations as a single obligation for purposes of satisfying the standards of knowledge requirements set forth in §§ 1.1471–3(e) and 1.1471–4(c)(2)(ii), and for purposes of determining the balance or value of any of the obligations when applying any of the account thresholds applicable to due diligence or reporting as set forth in §§ 1.1471–3(c)(6)(ii), 1.1471–3(d), 1.1471–4(c), 1.1471–5(a)(4), and 1.1471–5(b)(3)(vii). For example, with respect to consolidated obligations, if a withholding agent has reason to know that the chapter 4 status assigned to the account holder or payee of one of the consolidated obligations is inaccurate, then it has reason to know that the chapter 4 status assigned for all other consolidated obligations of the account holder or payee is inaccurate. Similarly, to the extent that an account balance or value is relevant for purposes of applying any account threshold to one or more of the consolidated obligations, the withholding agent must aggregate the balance or value of all such consolidated obligations.

(24) through (30) [Reserved] For further guidance, see § 1.1471–1(b)(24) through (30).

(31) *Direct reporting NFFE.* The term direct reporting NFFE has the meaning set forth in § 1.1472–1(c)(3).

(32) through (34) [Reserved] For further guidance, see § 1.1471–1(b)(32) through (34).

(35) *Effective date of the FFI agreement.* The term *effective date of the FFI agreement* with respect to an FFI or a branch of an FFI that is a participating FFI means the date on which the IRS issues a GIIN to the FFI or branch. For participating FFIs that receive a GIIN

prior to June 30, 2014, the effective date of the FFI agreement is June 30, 2014.

(36) through (40) [Reserved] For further guidance, see §1.1471–1(b)(36) through (40).

(41) *Excepted NFFE*. The term *excepted NFFE* means a NFFE that is described in §1.1472–1(c)(1).

(42) [Reserved] For further guidance, see §1.1471–1(b)(42).

(43) *Exempt recipient*. The term *exempt recipient* means a person described in §1.6049–4(c)(1)(ii) (for interest, dividends, and royalties), a person described in §1.6045–2(b)(2)(i) (for broker proceeds), and a person described in §1.6041–3(q) (for rents, amounts paid on notional principal contracts, and other fixed or determinable income).

(44) through (47) [Reserved] For further guidance, see §1.1471–1(b)(44) through (47).

(48) *FFI agreement*. The term *FFI agreement* means an agreement that is described in §1.1471–4(a). An FFI agreement includes a QI agreement, a WP agreement, and a WT agreement that is entered into by an FFI (other than an FFI that is a registered deemed-compliant FFI, including a reporting Model 1 FFI) and that has an effective date or renewal date on or after June 30, 2014. The term *FFI agreement* also includes a QI agreement that is entered into by a foreign branch of a U.S. financial institution (other than a branch that is a reporting Model 1 FFI) and that has an effective date or renewal date on or after June 30, 2014.

(49) [Reserved] For further guidance, see §1.1471–1(b)(49).

(50) *Financial institution*. The term *financial institution* has the meaning set forth in §1.1471–5(e) and includes a financial institution as defined in an applicable Model 1 or Model 2 IGA.

(51) through (66) [Reserved] For further guidance, see §1.1471–1(b)(51) through (66).

(67) *Intergovernmental agreement* (*IGA*). The term *intergovernmental agreement* or *IGA* means any applicable Model 1 or Model 2 IGA.

(68) through (75) [Reserved] For further guidance, see §1.1471–1(b)(68) through (75).

(76) *Limited branch*. The term *limited branch* has the meaning set forth in §1.1471–4(e)(2)(iii). With respect to a reporting Model 2 FFI, a limited branch is a branch of the reporting Model 2 FFI that operates in a jurisdiction that prevents such branch from fulfilling the requirements of a participating FFI or deemed-compliant FFI, or that cannot fulfill the requirements of a participating FFI or deemed-compliant FFI due to the expiration of the transitional rule for limited branches under §1.1471–4(e)(2)(v), and for which the reporting Model 2 FFI meets the terms of the applicable Model 2 IGA with respect to the branch.

(77) *Limited FFI*. The term *limited FFI* has the meaning set forth in §1.1471–4(e)(3)(ii). With respect to a reporting Model 2 FFI, a limited FFI is a related entity that operates in a jurisdiction that prevents the entity from fulfilling the requirements of a participating FFI or deemed-compliant FFI or that cannot fulfill the requirements of a participating FFI or deemed-compliant FFI due to the expiration of the transitional rule for limited FFIs under §1.1471–4(e)(3)(iv), and for which the reporting Model 2 FFI meets the requirements of the applicable Model 2 IGA with respect to the entity.

(78) through (80) [Reserved] For further guidance, see §1.1471–1(b)(78) through (80).

(81) *Non-exempt recipient*. The term *non-exempt recipient* means a person that is not an exempt recipient.

(82) [Reserved] For further guidance, see §1.1471–1(b)(82).

(83) *Nonreporting IGA FFI*. The term *nonreporting IGA FFI* means an FFI that is identified as a nonreporting financial institution pursuant to a Model 1 IGA or Model 2 IGA that is not a registered deemed-compliant FFI, and an FFI that is a resident of, or located or established in, a Model 1 or Model 2 IGA jurisdiction, as the context requires, and that meets the requirements for certified deemed-compliant FFI status under §1.1471–5(f)(2).

(84) through (87) [Reserved] For further guidance, see §1.1471–1(b)(84) through (87).

(88) *Offshore obligation*. The term *offshore obligation* means an offshore obligation defined in §1.6049–5(c)(1) (by substituting the terms *withholding agent* or *financial institution* for the term *payor*).

(89) through (90) [Reserved] For further guidance, see §1.1471–1(b)(89) through (90).

(91) *Participating FFI*. The term *participating FFI* means an FFI that has agreed to comply with the requirements of an FFI agreement, including an FFI described in a Model 2 IGA that has agreed to comply with the requirements of an FFI agreement (a *reporting Model 2 FFI*). The term *participating FFI* also includes a QI branch of a U.S. financial institution, unless such branch is a reporting Model 1 FFI.

(92) through (97) [Reserved] For further guidance, see §1.1471–1(b)(92) through (97).

(98) *Payor*. The term *payor* has the meaning set forth in §§31.3406(a)–2 and 1.6049–4(a)(2) and generally includes a withholding agent.

(99) [Reserved] For further guidance, see §1.1471–1(b)(99).

(100) *Person*. The term *person* has the meaning set forth in section 7701(a)(1) and the regulations thereunder and includes an entity or arrangement that is an insurance company. The term *person* also includes, with respect to a withholdable payment, a QI branch of a U.S. financial institution.

(101) through (103) [Reserved] For further guidance, see §1.1471–1(b)(101) through (103).

(104) [Reserved] For further guidance, see §1.1471–1(b)(104).

(i) The term *preexisting obligation* means any account, instrument, contract, debt, or equity interest maintained, executed, or issued by the withholding agent that is outstanding on June 30, 2014. With respect to a withholding agent that is a participating FFI, the term *preexisting obligation* means any account, instrument, or contract (including any debt or equity interest) maintained, executed, or issued by the FFI that is outstanding on the effective date of the FFI agreement. With respect to a withholding agent that is a registered deemed-compliant FFI, a preexisting obligation means any account, instrument, or contract (including any debt or equity interest) that is maintained, executed, or issued by the FFI prior to the later of the date that the FFI registers as a deemed-compliant FFI pursuant to §1.1471–5(f)(1) and receives a GIIN or the date the FFI is required to implement its account opening procedures under §1.1471–5(f).

(ii) [Reserved] For further guidance, see §1.1471–1(b)(104)(ii).

(A) The account holder or payee also holds with the withholding agent (or a member of the withholding agent's expanded affiliated group or sponsored FFI group) an account, instrument, contract, or equity interest that is a preexisting obligation under paragraph (b)(104)(i) of this section;

(B) The withholding agent (and, as applicable, the member of the withholding agent's expanded affiliated group or sponsored FFI group) treats both of the aforementioned obligations, and any other obligations of the payee or account holder that are treated as preexisting obligations under this paragraph (b)(104)(ii), as consolidated obligations; and

(C) With respect to an obligation that is subject to AML due diligence, the withholding agent is permitted to satisfy such AML due diligence for the obligation by relying upon the AML due diligence performed for the preexisting obligation described in paragraph (b)(104)(i) of this section.

(105) *Pre-FATCA Form W–8*. The term *pre-FATCA Form W–8* means a version of a Form W–8 that was issued by the IRS prior to 2013 (including an acceptable substitute form based on such version) and that does not contain chapter 4 statuses but otherwise meets the requirements of §1.1441–1(e)(1)(ii) applicable to such certificate (or substitute form) and has not expired, or a Form W–8 that was issued prior to 2013 and furnished by an individual to establish such individual's foreign status but otherwise meets the requirements of §1.1441–1(e)(1)(ii) applicable to such certificate and has not expired.

(106) through (112) [Reserved] For further guidance, see §1.1471–1(b)(106) through (112).

(113) *Reportable payment*. The term *reportable payment* means a payment of interest or dividends (as defined in section 3406(b)(2)) and other reportable payments (as defined in section 3406(b)(3)).

(114) [Reserved] For further guidance, see §1.1471–1(b)(114).

(115) *Reporting Model 2 FFI*. The term *reporting Model 2 FFI* means a participating FFI that is described in § 1.1471–1(b)(91).

(116) through (122) [Reserved] For further guidance, see § 1.1471–1(b)(116) through (122).

(123) *Sponsored direct reporting NFFE*. The term *sponsored direct reporting NFFE* has the meaning set forth in § 1.1472–1(c)(5).

(124) *Sponsoring entity*. The term *sponsoring entity* means (i) an entity that registers with the IRS and agrees to perform the due diligence, withholding, and reporting obligations of one or more FFIs pursuant to § 1.1471–5(f)(1)(i)(F) or (f)(2)(iii); or (ii) an entity that registers with the IRS and agrees to perform the due diligence and reporting obligations of one or more direct reporting NFFEs pursuant to § 1.1472–1(c)(5).

(125) *Standardized industry coding system*. The term *standardized industry coding system* means a coding system used by the withholding agent or FFI to classify account holders by business type for purposes other than U.S. tax purposes and that was implemented by the withholding agent by the later of January 1, 2012, or six months after the date the withholding agent was formed or organized.

(126) through (127) [Reserved] For further guidance, see § 1.1471–1(b)(126) through (127).

(128) *Substantial U.S. owner*. The term *substantial U.S. owner* or *substantial United States owner* has the meaning set forth in § 1.1473–1(b). In the case of a reporting Model 2 FFI, in applying this section with respect to a passive NFFE the term *substantial U.S. owner* means a *controlling person* as defined in the applicable Model 2 IGA.

(129) through (134) [Reserved] For further guidance, see § 1.1471–1(b)(129) through (134).

(135) *U.S. branch treated as a U.S. person*. The term *U.S. branch treated as a U.S. person* means a U.S. branch of a participating FFI, registered deemed-compliant FFI, or NFFE that is treated as a U.S. person under § 1.1441–1(b)(2)(iv)(A).

(136) through (140) [Reserved] For further guidance, see § 1.1471–1(b)(136) through (140).

(141) *U.S. person*—(i) The term *U.S. person* or *United States person* means a person described in section 7701(a)(30), the United States government (including an agency or instrumentality thereof), a State (including an agency or instrumentality thereof), or the District of Columbia (including an agency or instrumentality thereof). The term *U.S. person* or *United States person* also means a foreign insurance company that has made an election under section 953(d), provided that either the foreign insurance company is not a specified insurance company (as described in § 1.1471–5(e)(1)(iv)) and is not licensed to do business in any State, or the foreign insurance company is a specified insurance company and is licensed to do business in any State.

(ii) The term *U.S. person* or *United States person* does not include a foreign insurance company that has made an election under section 953(d) if it is a specified insurance company and is not licensed to do business in any State.

(142) through (151) [Reserved] For further guidance, see § 1.1471–1(b)(142) through (151).

(c) [Reserved] For further guidance, see § 1.1471–1(c).

(d) *Expiration date*. The applicability of this section expires on February 28, 2017.

[T.D. 9657, 79 FR 12826, Mar. 6, 2014; 79 FR 37176, July 1, 2014]

§ 1.1471–2 Requirement to deduct and withhold tax on withholdable payments to certain FFIs.

(a) *Requirement to withhold on payments to FFIs*—(1) [Reserved] For further guidance, see § 1.1471–2T(a)(1).

(2) *Special withholding rules*—(i) [Reserved] For further guidance, see § 1.1471–2T(a)(2)(i).

(ii) [Reserved]. For further guidance, see § 1.1471–2T(a)(2)(ii).

(iii) *Requirement to withhold if a participating FFI or registered deemed-compliant FFI makes an election to be withheld upon*. A person that otherwise would be a payee with respect to a payment but that makes an election to be withheld upon does not agree to accept primary withholding responsibility for the payment under chapter 3 or 4. Accordingly, such person cannot be treated as the payee and the withholding

agent must determine whether it must withhold based on the chapter 4 status of the payee on whose behalf the person is receiving the payment. The election to be withheld upon is only available to the extent provided in paragraph (a)(2)(iii)(A) and (B) of this section. The election is not available to an entity that is required to accept primary withholding responsibility for the payment, such as a WP or WT receiving a payment of U.S. source FDAP income, or an entity that already must be withheld upon because it may not accept primary withholding responsibility for the payment and, as such, already must pass up documentation with respect to the payee to the withholding agent, such as a participating FFI that is an NQI receiving a payment of U.S. source FDAP income.

(A) [Reserved] For further guidance, see §1.1471–2T(a)(2)(iii)(A).

(*1*) The withholding agent is a participating FFI, reporting Model 1 FFI, QI, or a U.S. withholding agent;

(*2*) The person who receives the payment is a participating FFI or registered deemed-compliant FFI that acts as a QI with respect to the payment;

(*3*) The person who receives the payment provides the withholding agent, at or before the time of the payment, with a valid intermediary withholding certificate with respect to the payment that notifies the withholding agent that it has elected to be withheld upon, certifies that it is not assuming primary withholding responsibility under chapter 3, and designates whether such election is made for all accounts held with the withholding agent or for the specific accounts identified on the withholding certificate; and

(*4*) The intermediary withholding certificate is accompanied by a withholding statement described in §1.1471–3(c)(3)(iii)(B).

(B) *Election to be withheld upon for gross proceeds.* [Reserved]

(iv) *Withholding obligation of a territory financial institution.* A territory financial institution that is a flow-through entity or that acts as an intermediary with respect to a withholdable payment has an obligation to withhold (to the extent required under this section and §1.1472–1(b)) if it agrees to be treated as a U.S. person with respect to the payment for purposes of both chapter 4 and §1.1441–1(b)(2)(iv)(A). A territory financial institution that is a flow-through entity or that acts as an intermediary with respect to a withholdable payment is not required to withhold under paragraph (a)(1) of this section or §1.1472–1(b), however, if it has provided the withholding agent that is a U.S. withholding agent, participating FFI, reporting Model 1 FFI, or QI with all of the documentation described in §1.1471–3(c)(3)(iii) (in which it has not agreed to be treated as a U.S. person with respect to the payment), and it does not know, or have reason to know, that another withholding agent failed to withhold the correct amount or failed to report the payment correctly under §1.1474–1(d).

(v) [Reserved] For further guidance, see §1.1471–2T(a)(2)(v).

(vi) *Payments of gross proceeds.* [Reserved]

(3) *Coordination of withholding under sections 1471(a) and (b).* The following entities are deemed to satisfy their withholding obligations under section 1471(a) and this section: participating FFIs that comply with the withholding requirements of §1.1471–4(b); exempt beneficial owners; section 501(c) entities described in §1.1471–5(e)(5)(v); and nonprofit organizations described in §1.1471–5(e)(5)(vi). See §1.1471–5(f) for when a deemed-compliant FFI is deemed to satisfy its withholding obligations under section 1471(a) and this section.

(4) *Payments for which no withholding is required.* A withholding agent that has determined, in accordance with the documentation requirements and other rules provided in §1.1471–3, that the payee of a withholdable payment is a foreign entity must determine whether the payment is exempt from withholding. Paragraphs (a)(4)(i) through (viii) of this section describe the circumstances in which a withholdable payment is not subject to withholding under section 1471(a) and this section.

(i) *Exception to withholding if the withholding agent lacks control, custody, or knowledge*—(A) *In general.* A withholding agent that is not related to the payee or beneficial owner has an obligation to withhold under chapter 4

only to the extent that, at any time between the date that the obligation to withhold would arise (but for the provisions of this paragraph (a)(4)(i)) and the due date for filing the return on Form 1042 (including extensions) for the year in which the payment occurs, it has control over or custody of money or property owned by the payee or beneficial owner from which to withhold an amount and has knowledge of the facts that give rise to the payment. The exemption from the obligation to withhold under this paragraph (a)(4)(i) does not apply, however, to payments with respect to stock or other securities or if the lack of control or custody of money or property from which to withhold is part of a pre-arranged plan known to the withholding agent to avoid withholding under section 1471 or 1472. A withholding agent does not lack control over money or property for purposes of this paragraph (a)(4)(i) if the withholding agent directs another party to make the payment. Thus, for example, a principal does not cease to have control over a payment when it contracts with a paying agent to make the payments to its account holders in lieu of paying the account holders directly. Further, a withholding agent does not lack knowledge of the facts that give rise to a payment merely because the withholding agent does not know the character or source of the payment for U.S. tax purposes. See paragraph (a)(5) of this section for rules addressing a withholding agent's obligations when the withholding agent has knowledge of the facts that give rise to the payment, but the character or source of the payment is not known. For purposes of this paragraph (a)(4)(i), a withholding agent is related to the payee or beneficial owner if it is related within the meaning of section 482. Any exemption from withholding pursuant to this paragraph (a)(4)(i) applies without a requirement that documentation be furnished to the withholding agent. The special rules set forth in §1.1441–2(d)(2) through (4), regarding the obligation of a withholding agent with respect to cancellation of debt, the satisfaction of a tax liability following underwithholding by a withholding agent, and amounts described in §1.860G–3(b)(1) (regarding certain partnership allocations of REMIC net income with respect to a REMIC residual interest) also apply for purposes of chapter 4.

(B) *Example.* A, an individual, owns stock in DC, a domestic corporation, through a custodian, Bank 1, that is a participating FFI. A also has a money market account at Bank 2, which is also a participating FFI. DC pays a dividend of $1,000 that is deposited in A's custodial account at Bank 1. A then directs Bank 1 to transfer $1,000 to A's money market account at Bank 2. With respect to the payment of the dividend into A's custodial account with Bank 1, both DC and Bank 1 are withholding agents making a withholdable payment for which they have custody, control, and knowledge. See §1.1473–1(a)(2)(vii)(B) and (d). Therefore, both DC and Bank 1 have an obligation to withhold on the payment unless they can reliably associate the payment with documentation sufficient to treat the respective payees as not subject to withholding under chapter 4. With respect to the wire transfer of $1,000 from A's account at Bank 1 to A's account at Bank 2, neither Bank 1 nor Bank 2 is required to withhold with respect to the transfer because neither bank has knowledge of the facts that gave rise to the payment. Even though Bank 1 is a custodian with respect to A's interest in DC and has knowledge regarding the $1,000 dividend paid to A, once Bank 1 credits the $1,000 dividend to A's account, the $1,000 becomes A's property. When A transfers the $1,000 to its account at Bank 2, this constitutes a separate payment about which Bank 1 has no knowledge regarding the type of payment made. Further, Bank 2 only has knowledge that it receives $1,000 to be credited to A's account but has no knowledge regarding the type of payment made. Accordingly, Bank 1 and Bank 2 have no withholding obligation with respect to the transfer from A's custodial account at Bank 1 to A's money market account at Bank 2.

(ii) [Reserved] For further guidance, see §1.1471–2T(a)(4)(ii).

(A) [Reserved] For further guidance, see §1.1471–2T(a)(4)(ii)(A).

(B) [Reserved] For further guidance, see §1.1471–2T(a)(4)(ii)(B).

(*1*) The withholding agent has available as part of its electronically searchable information a designation for the payee as a QI or NQI; or

(*2*) For an account maintained in the United States, the payee is presumed to be a foreign entity under § 1.1471–3(f) or is documented as a foreign entity for purposes of chapter 3 or 61, and the withholding agent has recorded as part of its electronically searchable information one of the following North American Industry Classification System or Standard Industrial Classification codes indicating that the payee is a financial institution:

(*i*) Commercial Banking (NAICS 522110).

(*ii*) Savings Institutions (NAICS 522120).

(*iii*) Credit Unions (NAICS 522130).

(*iv*) Other Depositary Credit Intermediation (NAICS 522190).

(*v*) Investment Banking and Securities Dealing (NAICS 523110).

(*vi*) Securities Brokerage (NAICS 523120).

(*vii*) Commodity Contracts Dealing (NAICS 523130).

(*viii*) Commodity Contracts Brokerage (NAICS 523140).

(*ix*) Miscellaneous Financial Investment Activities (NAICS 523999).

(*x*) Open-End Investment Funds (NAICS 525910).

(*xi*) Commercial Banks, NEC (SIC 6029).

(*xii*) Branches and Agencies of Foreign Banks (branches) (SIC 6081).

(*xiii*) Foreign Trade and International Banking Institutions (SIC 6082).

(*xiv*) Asset-Backed Securities (SIC 6189).

(*xv*) Security & Commodity Brokers, Dealers, Exchanges & Services (SIC 6200).

(*xvi*) Security Brokers, Dealers & Flotation Companies (SIC 6211).

(*xvii*) Commodity Contracts Brokers & Dealers (SIC 6221).

(*xviii*) Unit Investment Trusts, Face-Amount Certificate Offices, and Closed-End Management Investment Offices (SIC 6726).

(iii) *Payments to a participating FFI.* Except to the extent provided in paragraph (a)(2)(i) of this section, a withholding agent is not required to withhold under section 1471(a) and this section on a withholdable payment made to a payee that the withholding agent can treat as a participating FFI in accordance with § 1.1471–3(d)(3). For this purpose, a limited branch of a participating FFI is treated as a nonparticipating FFI.

(iv) *Payments to a deemed-compliant FFI.* Except to the extent provided in paragraph (a)(2)(i) or (iii) of this section, a withholding agent is not required to withhold under section 1471(a) and this section on a withholdable payment made to a payee that the withholding agent can treat as a deemed-compliant FFI in accordance with § 1.1471–3(d)(4) through (7). For this purpose, a limited branch of a deemed-compliant FFI is treated as a nonparticipating FFI.

(v) *Payments to an exempt beneficial owner.* A withholding agent is not required to withhold under section 1471(a) and this section on a withholdable payment to the extent that the withholding agent can reliably associate the payment with documentation to determine the portion of the payment that is allocable to an exempt beneficial owner in accordance with § 1.1471–3(d)(8). For example, a withholding agent is not required to withhold under this section on a withholdable payment made to a payee that is an exempt beneficial owner with respect to the payment, to a nonparticipating FFI to the extent that the nonparticipating FFI receives the payment as an intermediary on behalf of one or more of its account holders that are exempt beneficial owners, or to a flow-through entity to the extent that the flow-through entity receives the payment with respect to one or more of its partners, beneficiaries, or owners (as applicable) that are exempt beneficial owners. See § 1.1471–3(d)(8)(ii) for special rules for a withholding agent to determine the portion of a withholdable payment that is beneficially owned by an exempt beneficial owner in the case of a payment made to a nonparticipating FFI.

(vi) *Payments to a territory financial institution.* A withholding agent is not required to withhold under section 1471(a) and this section on a withholdable payment made to a payee that the withholding agent can treat as

a territory financial institution that beneficially owns the payment in accordance with §1.1471–3(d)(10)(i). A withholding agent also is not required to withhold under this section on a withholdable payment that the withholding agent can treat, in accordance with §1.1471–3(d)(10)(ii), as made to a territory financial institution that is a flow-through entity or that acts as an intermediary with respect to the payment and that has agreed to be treated as a U.S. person for purposes of chapters 3 and 4 with respect to the payment. A territory financial institution's agreement to be treated as a U.S. person for purposes of this section must be evidenced by a withholding certificate described in §1.1471–3(c)(3)(iii)(F) furnished by the territory financial institution to the withholding agent.

(vii) *Payments to an account held with a clearing organization with FATCA-compliant membership.* [Reserved]

(viii) *Payments to certain excepted accounts.* A withholding agent is not required to withhold under chapter 4 on a withholdable payment made to an account described in §1.1471–5(b)(2).

(5) *Withholding requirements if source or character of payment is unknown*—(i) *General rule.* If a withholding agent has knowledge of the facts that give rise to a payment but is unable to determine at the time of payment the character of the payment sufficiently to determine whether it is a withholdable payment, such payment must be treated as a withholdable payment. If a withholding agent has knowledge of the facts that give rise to a payment but is unable to determine at the time of payment the source of the payment, such payment must be treated as U.S. source income. For example, if a withholding agent does not know at the time of payment the amount of the payment that is a withholdable payment, because that calculation depends on facts that are not known at the time of payment (for example, because the withholding agent does not know whether services were performed in the United States or whether the payment constitutes income to the recipient) the withholding agent must withhold an amount necessary to ensure that the amount withheld is not less than 30 percent of the amount that could be a withholdable payment, subject to the limitation that the withheld amount must not exceed 30 percent of the amount paid. Notwithstanding this paragraph (a)(5), a withholding agent may presume a payment to be effectively connected with the conduct of a trade or business in the United States, and thus, not a withholdable payment, if it can do so under §1.1471–3(f)(6) (regarding payments to certain U.S. branches).

(ii) *Optional escrow procedure.* With respect to a payment described in paragraph (a)(5) of this section, the withholding agent may elect to retain 30 percent of the payment to hold in escrow until the earlier of the date that the amount of the withholdable payment can be determined or one year from the date the amount is placed in escrow, at which time either the withholding becomes due under this section or, to the extent that it is determined that the payment is of a type for which no withholding is required, the escrowed amount must be paid to the payee.

(b) *Grandfathered obligations*—(1) *Grandfathered treatment of outstanding obligations.* Notwithstanding §1.1473–1(a), a withholdable payment does not include any payment made under a grandfathered obligation described in paragraph (b)(2)(i)(A) of this section, or any gross proceeds from the disposition of such an obligation. Notwithstanding §1.1471–5(h), a foreign passthru payment does not include any payment made under a grandfathered obligation described in paragraph (b)(2)(i)(A) or (B) of this section, or any gross proceeds from the disposition of such an obligation. A premium paid with regard to an insurance contract or annuity contract that is a grandfathered obligation is treated as a payment made under a grandfathered obligation.

(2) *Definitions.* The following definitions apply solely for purposes of this paragraph (b).

(i) *Grandfathered obligation*—(A) The term *grandfathered obligation* means—

(*1*) [Reserved] For further guidance, see §1.1471–2T(b)(2)(i)(A)(*1*).

(*2*) Any obligation that gives rise to a withholdable payment solely because the obligation is treated as giving rise

to a dividend equivalent pursuant to section 871(m) and the regulations thereunder, provided that the obligation is executed on or before the date that is six months after the date on which obligations of its type are first treated as giving rise to dividend equivalents; and

(*3*) Any agreement requiring a secured party to make a payment with respect to, or to repay, collateral posted to secure a grandfathered obligation. If collateral (or a pool of collateral) secures both grandfathered obligations and obligations that are not grandfathered, the collateral posted to secure the grandfathered obligations must be determined by allocating (pro rata by value) the collateral (or each item comprising the pool of collateral) to all outstanding obligations secured by the collateral (or pool of collateral).

(B) Solely for purposes of a foreign passthru payment, the term *grandfathered obligation* also includes any obligation that is executed on or before the date that is six months after the date on which final regulations defining the term foreign passthru payment are filed with the FEDERAL REGISTER.

(ii) *Obligation*—(A) Except as otherwise provided in paragraph (b)(2)(ii)(B) of this section, the term *obligation* means any legally binding agreement or instrument. An obligation for purposes of this paragraph (b)(2)(i) includes, for example—

(*1*) A debt instrument (for example, a bond, guaranteed investment certificate, or term deposit);

(*2*) An agreement to extend credit for a fixed term (for example, a line of credit or a revolving credit facility), provided that the agreement as of its issue date fixes the material terms (including a stated maturity date) under which the credit will be provided;

(*3*) A derivatives transaction entered into between counterparties under an ISDA Master Agreement that is evidenced by a confirmation;

(*4*) [Reserved] For further guidance, see § 1.1471–2T(b)(2)(ii)(A)(*4*).

(*5*) An immediate annuity contract payable for a period certain or for the life of the annuitant.

(B) An *obligation* for purposes of this paragraph (b)(2)(ii) does not include any legal agreement or instrument that—

(*1*) Is treated as equity for U.S. tax purposes;

(*2*) [Reserved] For further guidance, see § 1.1471–2T(b)(2)(ii)(B)(*2*).

(*3*) Is a brokerage agreement, custodial agreement, investment linked insurance contract, investment linked annuity contract, or similar agreement to hold financial assets for the account of others and to make and receive payments of income and other amounts with respect to such assets; or

(*4*) Is a master agreement that merely sets forth standard terms and conditions that are intended to apply to a series of transactions between parties but that does not set forth all of the specific terms necessary to conclude a particular transaction.

(iii) *Date outstanding*. Except as provided in the following sentence, an obligation that constitutes indebtedness for U.S. tax purposes is outstanding on the date provided in paragraph (b)(2)(i) if it has an issue date before such date. In all other cases, including an agreement described in paragraph (b)(2)(ii)(A)(*2*) of this section, an obligation is outstanding on the date provided in paragraph (b)(2)(i) if a legally binding agreement establishing the obligation was executed between the parties to the agreement before such date. Any material modification of an outstanding obligation will result in the obligation being treated as newly issued or executed as of the effective date of such modification.

(iv) [Reserved] For further guidance, see § 1.1471–2T(b)(2)(iv).

(3) *Application to flow-through entities*—(i) *Partnerships*. A payment made under a grandfathered obligation includes a payment made to a partnership with respect to such obligation and a payment made with respect to a partnership's disposition of such obligation. A payment made under a grandfathered obligation also includes the income from such obligation that is includible in the gross income of a partner with respect to a capital or profits interest in the partnership and the gross proceeds allocated to a partner from the disposition of such obligation as determined under § 1.1473–1(a)(5)(vii).

(ii) *Simple trusts.* A payment made under a grandfathered obligation includes a payment made to a simple trust with respect to such obligation, including a payment made with respect to a simple trust's disposition of such obligation. A payment made under a grandfathered obligation also includes income from such obligation that is includible in the income of a beneficiary and further includes a beneficiary's share of the gross proceeds from a disposition of such obligation as determined under § 1.1473–1(a)(5)(vii).

(iii) *Grantor trusts.* A payment made under a grandfathered obligation includes a payment made to a grantor trust with respect to such obligation, including a payment made with respect to the trust's disposition of such obligation. A payment made under a grandfathered obligation also includes income from such obligation that is includible in the gross income of a person that is treated as an owner of the trust and the gross proceeds from the disposition of such obligation to the extent such owner is treated as owning the portion of the trust that consists of the obligation.

(4) *Determination by withholding agent of grandfathered treatment*—(i) *In general.* A withholding agent other than the issuer of the obligation (or agent of the issuer) may, absent actual knowledge, rely on a written statement by the issuer of the obligation to determine if such obligation meets the requirements for grandfathered treatment provided under this paragraph (b).

(ii) [Reserved] For further guidance, see § 1.1471–2T(b)(4)(ii).

(iii) *Record retention.* A withholding agent that relies on a document provided by the issuer of an obligation as described in paragraph (b)(4)(i) or (ii) of this section must retain such document in its records for the applicable period of limitations on assessment and collection with respect to amounts paid under the obligation or from disposition of the obligation.

(c) *Effective/applicability date.* This section generally applies on January 28, 2013. For other dates of applicability, see §§ 1.1471–2(a)(1); 1.1471–2(a)(2)(i), (ii), (iii)(A); 1.1471–2(a)(4)(ii).

[T.D. 9610, 78 FR 5911, Jan. 28, 2013; 78 FR 55203, Sept. 10, 2013, as amended by T.D. 9657, 79 FR 12828, Mar. 6, 2014; 79 FR 37176, July 1, 2014]

§ 1.1471–2T Requirement to deduct and withhold tax on withholdable payments to certain FFIs (temporary).

(a) [Reserved] For further guidance, see § 1.1471–2(a).

(1) *General rule of withholding.* Under section 1471(a), notwithstanding any exemption from withholding under any other provision of the Code or regulations, a withholding agent must withhold 30 percent of any withholdable payment made after June 30, 2014, to a payee that is an FFI unless either the withholding agent can reliably associate the payment with documentation upon which it is permitted to rely to treat the payment as exempt from withholding under paragraph (a)(4) of this section or the payment is made under a grandfathered obligation that is described in paragraph (b) of this section or constitutes gross proceeds from the disposition of such an obligation. A withholding agent that is making a payment must determine who the payee is under § 1.1471–3(a) with respect to that payment and the chapter 4 status of such payee. See § 1.1471–3 for requirements for determining the chapter 4 status of a payee, including additional documentation requirements that apply when a payment is made to an intermediary or flow-through entity that is not the payee. Withholding under this section applies without regard to whether the payee receives a withholdable payment as a beneficial owner or as an intermediary. See paragraph (a)(2)(iv) of this section for a description of the withholding requirements imposed on territory financial institutions as withholding agents under chapter 4. In the case of a withholdable payment to a NFFE, a withholding agent is required to determine whether withholding applies under section 1472 and § 1.1472–1. Except as otherwise provided in the regulations under chapter 4, a withholding

obligation arises on the date a payment is made, as determined under § 1.1473–1(a).

(2) [Reserved] For further guidance, see § 1.1471–2(a)(2).

(i) *Requirement to withhold on payments of U.S. source FDAP income to participating FFIs and deemed-compliant FFIs that are NQIs, NWPs, or NWTs.* A withholding agent that, after June 30, 2014, makes a payment of U.S. source FDAP income to a participating FFI or deemed-compliant FFI that is an NQI receiving the payment as an intermediary, or a NWP or NWT, must withhold 30 percent of the payment unless the withholding is reduced under this paragraph (a)(2)(i). A withholding agent is not required to withhold on a payment, or portion of a payment, that it can reliably associate, in the manner described in § 1.1471–3(c)(2), with a valid intermediary or flow-through withholding certificate that meets the requirements of § 1.1471–3(d)(4) and a withholding statement that meets the requirements of § 1.1471–3(c)(3)(iii)(B) and that allocates the payment or portion of the payment to payees for which no withholding is required under chapter 4. Further, a withholding agent is not required to withhold on a payment that it can reliably associate with documentation indicating that the payee is a U.S. branch treated as a U.S. person (as defined in § 1.1471–1(b)(135)).

(ii) *Residual withholding responsibility of intermediaries and flow-through entities.* An intermediary or flow-through entity that receives a withholdable payment after June 30, 2014, is required to withhold on such payment to the extent required under chapter 4. Notwithstanding the previous sentence, an intermediary or flow-through entity is not required to withhold if another withholding agent has withheld the full amount required. Further, an NQI, NWP, or NWT is not required to withhold with respect to a withholdable payment under chapter 4 if it has provided a valid intermediary withholding certificate or flow-through withholding certificate and all of the information required by § 1.1471–3(c)(3)(iii), and it does not know, and has no reason to know, that another withholding agent failed to withhold the correct amount. A QI's, WP's, or WT's obligation to withhold and report is determined in accordance with its QI withholding agreement, WP agreement, or WT agreement.

(iii) [Reserved] For further guidance, see § 1.1471–2(a)(2)(iii).

(A) *Election to be withheld upon for U.S. source FDAP income.* A withholding agent is required to withhold with respect to a payment, or portion of a payment, that is U.S. source FDAP income subject to withholding that is made after June 30, 2014, to a QI that has elected in accordance with this paragraph to be withheld upon, unless such withholding agent also makes an election to be withheld upon under this paragraph (a)(2)(iii)(A) or is an FFI that may not accept primary withholding responsibility for the payment. In such case, the withholding agent must withhold 30 percent of the portion of the payment that is allocable, pursuant to a withholding statement described in § 1.1471–3(c)(3)(iii)(B) provided by the QI, to recalcitrant account holders and nonparticipating FFIs. If no such allocation information is provided, the withholding agent must apply the presumption rules of § 1.1471–3(f) to determine the chapter 4 status of the payee. A QI that is an FFI and that makes the election to be withheld upon with respect to a payment of U.S. source FDAP income may not assume primary withholding responsibility under chapter 3 for that payment. Conversely, a QI that is an FFI and that does not make the election to be withheld upon with respect to a payment of U.S. source FDAP income is required to assume primary withholding responsibility under chapter 3 for that payment. The election to be withheld upon is only available with respect to a payment of U.S. source FDAP income if—

(*1*) through (*4*) [Reserved] For further guidance, see § 1.1471–2(a)(2)(iii)(A)(*1*) through (*4*).

(B) [Reserved] For further guidance, see § 1.1471–2(a)(2)(iii)(B).

(iv) [Reserved] For further guidance, see § 1.1471–2(a)(2)(iv).

(v) *Withholding obligation of a foreign branch of a U.S. financial institution.* Generally, a foreign branch of a U.S. financial institution is a withholding agent and is not an FFI. However, a QI

branch of a U.S. financial institution is both a withholding agent and either a participating FFI or a registered deemed-compliant FFI. Accordingly, a QI branch of a U.S. financial institution must withhold in accordance with this section and § 1.1472–1(b) in addition to meeting its obligations under either § 1.1471–4(b) and its FFI agreement or § 1.1471–5(f). Similarly, a foreign branch of a U.S. financial institution that is also a reporting Model 1 FFI is both a withholding agent and a registered deemed-compliant FFI. Accordingly, a foreign branch of a U.S. financial institution that is a reporting Model 1 FFI must withhold in accordance with this section and § 1.1472–1(b). A foreign branch of a U.S. financial institution that is not a QI is not permitted to make an election to be withheld upon.

(vi) [Reserved] For further guidance, see § 1.1471–2(a)(2)(vi).

(3) [Reserved] For further guidance, see § 1.1471–2(a)(3).

(4) [Reserved] For further guidance, see § 1.1471–2(a)(4).

(i) through (i)(B) [Reserved] For further guidance, see § 1.1471–2(a)(4)(i) through (a)(4)(i)(B).

(ii) *Exception to withholding for certain payments made prior to July 1, 2016 (transitional).*

(A) *In general.* For any withholdable payment made prior to July 1, 2016, with respect to a preexisting obligation for which a withholding agent does not have documentation indicating the payee's status as a nonparticipating FFI, the withholding agent is not required to withhold under this section and section 1471(a) unless the payee is a prima facie FFI.

(B) *Prima facie FFIs.* If the payee is a prima facie FFI, the withholding agent must treat the payee as a nonparticipating FFI beginning on January 1, 2015, until the date the withholding agent obtains documentation sufficient to establish a different chapter 4 status of the payee. A *prima facie FFI* means any payee if—

(*1*) through (*2*)(*xviii*) [Reserved] For further guidance, see § 1.1471–2(a)(4)(ii)(B)(*1*) through (a)(4)(ii)(B)(*2*)(*xviii*).

(iii) through (viii) [Reserved] For further guidance, see § 1.1471–2(a)(4)(iii) through (viii).

(5) through (5)(ii) [Reserved] For further guidance, see § 1.1471–2(a)(5) through (a)(5)(ii).

(b) [Reserved] For further guidance, see § 1.1471–2(b).

(1) [Reserved] For further guidance, see § 1.1471–2(b)(1).

(2) [Reserved] For further guidance, see § 1.1471–2(b)(2).

(i) [Reserved] For further guidance, see § 1.1471–2(b)(2)(i).

(A) [Reserved] For further guidance, see § 1.1471–2(b)(2)(i)(A).

(*1*) Any obligation outstanding on July 1, 2014;

(*2*) through (*3*) [Reserved] For further guidance, see § 1.1471–2(b)(2)(i)(A)(*2*) through (*3*).

(B) [Reserved] For further guidance, see § 1.1471–2(b)(2)(i)(B).

(ii) [Reserved] For further guidance, see § 1.1471–2(b)(2)(ii).

(A) [Reserved] For further guidance, see § 1.1471–2(b)(2)(ii)(A).

(*1*) through (*3*) [Reserved] For further guidance, see § 1.1471–2(b)(2)(ii)(A)(*1*) through (*3*).

(*4*) A life insurance contract under which the entire contract value is payable no later than upon the death of the individual(s) insured under the contract but, in the case of a life insurance contract that contains a provision that permits the substitution of a new individual as the insured under the contract, only until a substitution occurs; and

(*5*) [Reserved] For further guidance, see § 1.1471–2(b)(2)(ii)(A)(*5*).

(B) [Reserved] For further guidance, see § 1.1471–2(b)(2)(ii)(B).

(*1*) [Reserved] For further guidance, see § 1.1471–2(b)(2)(ii)(B)(*1*).

(*2*) Lacks a stated expiration or term (for example, a savings deposit or demand deposit, a deferred annuity contract, or an annuity contract that permits a substitution of a new individual as the annuitant under the contract);

(*3*) through (*4*) [Reserved] For further guidance, see § 1.1471–2(b)(2)(ii)(B)(*3*) through (*4*).

(iii) [Reserved] For further guidance, see § 1.1471–2(b)(2)(iii).

(iv) *Material modification.* In the case of an obligation that constitutes indebtedness for U.S. tax purposes, a material modification is any significant modification of the debt instrument as

defined in §1.1001–3(e). For life insurance contracts, a material modification includes any substitution of the insured under the contract. In all other cases, whether a modification of an obligation is material is determined based on the facts and circumstances.

(3) through (3)(iii) [Reserved] For further guidance, see §1.1471–2(b)(3) through (b)(3)(iii).

(4) [Reserved] For further guidance, see §1.1471–2(b)(4).

(i) [Reserved] For further guidance, see §1.1471–2(b)(4)(i).

(ii) *Determination of material modification*. For purposes of paragraph (b)(2)(iv) of this section (defining material modification), a withholding agent, other than the issuer of the obligation (or an agent of the issuer), is required to treat a modification of the obligation as material only if the withholding agent has actual knowledge thereof, such as in the event the withholding agent receives a disclosure indicating that there has been or will be a material modification to such obligation. The issuer of the obligation (or an agent of the issuer) that is a withholding agent is required to treat a modification of the obligation as material if the withholding agent knows or has reason to know that a material modification has occurred with respect to the obligation.

(iii) [Reserved] For further guidance, see §1.1471–2(b)(4)(iii).

(c) [Reserved] For further guidance, see §1.1471–2(c).

(d) *Expiration date*. The applicability of this section expires on February 28, 2017.

[T.D. 9657, 79 FR 12828, Mar. 6, 2014; 79 FR 37177, July 1, 2014]

§1.1471–3 Identification of payee.

(a) *Payee defined*—(1) *In general*. Except as otherwise provided in this paragraph (a), for purposes of chapter 4 a payee is the person to whom a payment is made, regardless of whether such person is the beneficial owner of the amount.

(2) *Payee with respect to a financial account*. For purposes of payments made to a financial account and except as otherwise provided in paragraph (a)(3) of this section, the payee is the holder of the financial account.

(3) *Exceptions*—(i) *Certain foreign agents or intermediaries*—(A) Except as otherwise provided in paragraphs (a)(3)(iv) and (vi) of this section (applicable to territory financial institutions and certain U.S. branches), a foreign person that is acting as an agent or intermediary with respect to a payment in accordance with paragraph (b)(1) of this section is not the payee if such foreign person is—

(*1*) An NFFE, unless the NFFE is a QI that has assumed primary withholding responsibility; or

(*2*) In the case of a payment of U.S. source FDAP income, a participating FFI, deemed-compliant FFI, or restricted distributor, unless the participating FFI, deemed-compliant FFI, or restricted distributor is a QI that has assumed primary withholding responsibility.

(B) In the case of an agent or intermediary described in paragraph (a)(3)(i)(A) of this section, the payee is the person or persons for whom the agent or intermediary collects the payment. Thus, for example, the payee of a payment of U.S. source FDAP income that the withholding agent can reliably associate with a withholding certificate from a QI that does not assume primary withholding responsibility with respect to the payment under chapter 3, or a payment to a participating FFI that is an NQI, is the person or persons for whom the QI or NQI acts.

(ii) *Foreign flow-through entity*—(A) A foreign entity that is a flow-through entity is a payee with respect to a payment only if the flow-through entity is—

(*1*) An FFI that is not a participating FFI or deemed-compliant FFI, or restricted distributor receiving a payment of U.S. source FDAP income;

(*2*) An excepted NFFE that is not acting as an agent or intermediary with respect to the payment;

(*3*) A WP or WT that is not acting as an agent or intermediary with respect to the payment; or

(*4*) Receiving income that is (or is deemed to be) effectively connected with the conduct of a trade or business in the United States, or receiving a payment of gross proceeds from the sale of property that can produce income that is effectively connected with

the conduct of a trade or business in the United States and that is excluded from the definition of a withholdable payment under § 1.1473–1(a)(4).

(B) A withholding agent that makes a withholdable payment to a flow-through entity that is not described in paragraphs (a)(3)(ii)(A)(*1*) through (*3*) of this section will be required to treat the partner, beneficiary, or owner (as applicable) as the payee (looking through partners, beneficiaries, and owners that are themselves flow-through entities that are not described in paragraphs (a)(3)(ii)(A)(*1*) through (*3*)).

(iii) [Reserved] For further guidance, see § 1.1471–3T(a)(3)(iii).

(iv) *Territory financial institution.* A withholding agent that makes a withholdable payment to a territory financial institution that is a flow-through entity or is acting as an intermediary or agent with respect to the payment may treat the territory financial institution as the payee only if the territory financial institution has agreed (as evidenced by a withholding certificate described in paragraphs (c)(3)(iii)(A) and (F) of this section) to be treated as a U.S. person with respect to the payment for purposes of both chapters 3 and 4. In all other cases, the withholding agent must treat as the payee the partner, beneficiary, or owner (as applicable) of the territory financial institution that is a flow-through entity (looking through partners, beneficiaries, and owners that are themselves flow-through entities that are not described in paragraphs (a)(3)(ii)(A)(*1*) through (*3*)) or the person on whose behalf the territory financial institution is acting.

(v) [Reserved] For further guidance, see § 1.1471–3T(a)(3)(v).

(vi) [Reserved] For further guidance, see § 1.1471–3T(a)(3)(vi).

(vii) *Foreign branch of a U.S. person.* A payment to a foreign branch of a U.S. person is generally a payment to a U.S. payee. However, a payment to a foreign branch of a U.S. financial institution will be treated as a payment to an FFI if the foreign branch is a QI that is acting as an intermediary with respect to the payment. Therefore, a foreign branch that is a QI will provide the withholding agent with an intermediary withholding certificate and the withholding agent will report the payment as having been made to the foreign branch on a Form 1042–S.

(b) *Determination of payee's status.* Except as otherwise provided in this section, a withholding agent must base its determination of the chapter 4 status of a payee on documentation that the withholding agent can reliably associate with such payment. If a withholding agent makes a payment to a person that is not the payee, the withholding agent will be required to determine the chapter 4 status of each intermediary or flow-through entity in the payment chain until the withholding agent is able to identify the payee. Paragraph (c) of this section provides rules for when a withholding agent can reliably associate a payment with appropriate documentation. Paragraph (d) of this section provides documentation requirements applicable to each class of payees, including exceptions for payments made with respect to offshore obligations or preexisting obligations. Paragraph (e) provides standards for determining when a withholding agent will be considered to have reason to know that a claim of exemption from withholding is unreliable or incorrect. Paragraph (f) of this section provides presumptions that apply for purposes of determining a payee's chapter 4 status in the absence of documentation or if the documentation provided is unreliable or incorrect.

(1) *Determining whether a payment is received by an intermediary.* A withholding agent must treat the person who receives a payment as an intermediary if it can reliably associate the payment with a valid intermediary withholding certificate on which the person who receives the payment claims to be a QI or NQI. A U.S. person's foreign branch that is acting in its capacity as a QI is treated as a foreign intermediary. A withholding agent that makes a payment with respect to an offshore obligation must also treat the person who receives the payment as an intermediary if the person has provided written notification, whether or not such notification is signed, that it accepts the payment on behalf of another person or persons. A withholding agent may rely on the

type of certificate furnished as determinative of whether the person who receives the payment is an intermediary, unless the withholding agent knows or has reason to know that the certificate is incorrect. For example, a withholding agent that receives a beneficial owner withholding certificate from an FFI may treat the FFI as the beneficial owner unless it has information in its records that would indicate otherwise or the certificate contains information that is not consistent with beneficial owner status (for example, subaccount numbers that do not correspond to accounts maintained by the withholding agent for such person or names of one or more persons other than the person submitting the withholding certificate). If the FFI receives a payment in part as a beneficial owner and in part as an intermediary, the withholding agent may request that the FFI furnish two certificates, that is, a beneficial owner certificate for the amounts it receives as a beneficial owner, and an intermediary withholding certificate for the amounts it receives as an intermediary. A withholding agent that cannot reliably associate a payment with documentation sufficient to treat the person who receives the payment as an intermediary or as other than an intermediary pursuant to this paragraph (b)(1) must follow the presumption rules set forth in paragraph (f)(5) of this section to determine whether it must treat the person who receives the payment as an intermediary. A determination that a payment is made to an intermediary under this paragraph (b)(1) is not a determination that the payment can be reliably associated with documentation. See paragraph (c)(2) of this section for rules on reliably associating a payment with documentation if such payment is made through an intermediary.

(2) *Determination of entity type.* A person's entity classification for purposes of chapter 4 is the person's entity classification for U.S. federal income tax purposes. Thus, for example, an entity that is disregarded as a legal entity in its country of organization or an arrangement that does not have a legal personality and is not a juridical person in the country in which it was organized will be treated as an entity for purposes of chapter 4 if it is an entity for U.S. federal income tax purposes. A withholding agent may rely upon a person's entity classification contained in a valid Form W–8 or W–9 if the withholding agent has no reason to know that the entity classification is incorrect. A withholding agent that makes a payment with respect to an offshore obligation may also rely upon a written notification provided by the person who receives the payment, regardless of whether such notification is signed, that indicates the person's entity classification (other than as a QI, WP, or WT) unless the withholding agent knows or has reason to know that the entity classification indicated by the person who receives the payment is incorrect. A withholding agent may not rely on a person's claim of classification other than as a corporation if the person's name indicates that the person is a per se corporation described in § 301.7701–2(b)(8) of this chapter unless the certificate or written statement contains a statement that the person is a grandfathered per se corporation described in § 301.7701–2(b)(8) and that its grandfathered status has not been terminated.

(3) [Reserved] For further guidance, see § 1.1471–3T(b)(3).

(4) *Determination of whether the payee is receiving effectively connected income.* A withholding agent may treat a payment as being made to a payee that is receiving income that is effectively connected with a trade or business in the United States, or gross proceeds from the sale of property that can produce income that is effectively connected with the conduct of a trade or business in the United States, if it can reliably associate the payment with a valid Form W–8ECI described in paragraph (c)(3)(v) of this section or if it can do so under the presumption rule in paragraph (f)(6) of this section.

(c) *Rules for reliably associating a payment with a withholding certificate or other appropriate documentation*—(1) *In general.* A withholding agent can reliably associate a withholdable payment with valid documentation if, prior to the payment, it has obtained (either directly or through an agent) valid documentation appropriate to the payee's

chapter 4 status as described in paragraph (d) of this section, it can reliably determine how much of the payment relates to the valid documentation, and it does not know or have reason to know that any of the information, certifications, or statements in, or associated with, the documentation are unreliable or incorrect. Thus, a withholding agent cannot reliably associate a withholdable payment with valid documentation provided by a payee to the extent such documentation appears unreliable or incorrect with respect to the claims made, or to the extent that information required to allocate all or a portion of the payment to each payee is unreliable or incorrect. A withholding agent may rely on information and certifications contained in withholding certificates or other documentation without having to inquire into the truthfulness of the information or certifications, unless it knows or has reason to know that the information or certifications are untrue. A withholding agent may rely upon the same documentation for purposes of both chapters 3 and 4 provided the documentation is sufficient to meet the requirements of each chapter. Alternatively, a withholding agent may elect to rely upon the presumption rules of paragraph (f) of this section in lieu of obtaining documentation from the payee.

(2) *Reliably associating a payment with documentation if a payment is made through an intermediary or flow-through entity that is not the payee*—(i) *In general.* A withholding agent that makes a payment to a foreign intermediary or foreign flow-through entity that is not the payee under paragraph (a) of this section can reliably associate the payment with valid documentation if, in addition to the documentation described in paragraph (d) of this section that is relevant to each payee, the withholding agent also has obtained a valid Form W–8IMY, described in paragraph (c)(3)(iii) of this section, from the intermediary or flow-through entity (and, with respect to a payment made through a chain of intermediaries or flow-through entities, has received a valid Form W–8IMY from each intermediary or flow-through entity in that chain). An intermediary or flow-through entity that is a participating FFI or registered deemed-compliant FFI receiving a payment of U.S. source FDAP income may, in lieu of providing the withholding agent with documentation for each payee, provide pooled allocation information to the extent and in the manner permitted by paragraph (c)(3)(iii)(B)(*2*) of this section. With respect to the documentation provided for the owners of a foreign flow-through entity, the foreign flow-through entity is permitted to provide the documentary evidence described in paragraph (d) of this section applicable to each payee in lieu of a withholding certificate, regardless of whether the payment is made with respect to an offshore obligation.

(ii) *Exception to entity account documentation rules for an offshore account of an intermediary or flow-through entity.* In the case of an offshore account held by an intermediary or flow-through entity not receiving a payment of U.S. source FDAP income, an FFI may, in lieu of obtaining a withholding certificate, reliably associate such account with valid documentation if the FFI has obtained a written statement certifying as to the account holder's chapter 4 status and stating that the account holder is a flow-through entity or is acting as an intermediary with respect to the payment. In such case, the intermediary or flow-through entity will also be required to provide the withholding statement that generally accompanies the Form W–8IMY, designating the payees and the appropriate amount that should be allocated to each payee, and valid documentation for each payee. If no such withholding statement or underlying documentation is provided, the payment will be treated as made to a nonparticipating FFI.

(3) *Requirements for validity of certificates*—(i) *Form W–9.* A valid Form W–9, or a substitute form, must meet the requirements prescribed in § 31.3406(h)-3 of this chapter, including the requirement that the form contain the payee's name and TIN, and be signed and dated under penalties of perjury by the payee or a person authorized to sign for the payee pursuant to sections 6061 through 6063 and the regulations thereunder. A foreign person, including a

U.S. branch of a foreign person that is treated as a U.S. person under § 1.1441–1(b)(2)(iv), or a foreign branch of a U.S. financial institution that is a QI, may not provide a Form W–9.

(ii) *Beneficial owner withholding certificate (Form W–8BEN).* A beneficial owner withholding certificate includes a Form W–8BEN (or a substitute form) and such other form as the IRS may prescribe. A beneficial owner withholding certificate is valid only if its validity period has not expired, it is signed under penalties of perjury by a person with authority to sign for the person whose name is on the form, and it contains—

(A) The person's name, permanent residence address, and TIN (if required);

(B) A certification that the person is not a U.S. citizen (if the person is an individual) or a certification of the country under the laws of which the person is created, incorporated, or governed (for a person other than an individual);

(C) [Reserved] For further guidance, see § 1.1471–3T(c)(3)(ii)(C).

(D) [Reserved] For further guidance, see § 1.1471–3T(c)(3)(ii)(D).

(E) Such other information required under paragraph (d) of this section applicable to the chapter 4 status selected or otherwise required by the regulations under section 1471 or 1472, or by the form or its accompanying instructions in addition to, or in lieu of, the information described in this paragraph (c)(3)(ii).

(iii) *Withholding certificate of an intermediary, flow-through entity, or U.S. branch (Form W–8IMY)*—(A) [Reserved] For further guidance, see § 1.1471–3T(c)(3)(iii)(A).

(*1*) The name and permanent residence address of the person.

(*2*) The country under the laws of which the person is created, incorporated, or governed.

(*3*) The person's entity classification for U.S. tax purposes.

(*4*) The person's chapter 4 status.

(*5*) [Reserved] For further guidance, see § 1.1471–3T(c)(3)(iii)(A)(*5*).

(*6*) In the case of an intermediary certificate, a certification that, with respect to accounts listed on the withholding statement, the intermediary is not acting for its own account.

(*7*) With respect to a withholding certificate of a QI, a certification that it is acting as a QI with respect to the accounts listed on the withholding statement.

(*8*) In the case of a participating FFI or registered deemed-compliant FFI (including a U.S. branch of either such entities that is not treated as a U.S. person) that is an NQI, NWP, NWT, or a QI that makes an election to be withheld upon, an FFI withholding statement that meets the requirements of paragraphs (c)(3)(iii)(B)(*1*) and (*2*) of this section.

(*9*) In the case of a territory financial institution that does not agree to be treated as a U.S. person or a U.S. branch that is not a U.S. branch of a participating FFI, registered deemed-compliant FFI, or nonparticipating FFI, a chapter 4 withholding statement that meets the requirements of paragraphs (c)(3)(iii)(B)(*1*) and (*3*) of this section.

(*10*) In the case of an NFFE or certified deemed-compliant FFI that is an NQI, NWP, or NWT and is not the payee, a chapter 4 withholding statement that meets the requirements of paragraphs (c)(3)(iii)(B)(*1*) and (*3*) of this section.

(*11*) In the case of a nonparticipating FFI receiving a payment on behalf of one or more exempt beneficial owners, an exempt beneficial owner withholding statement that meets the requirements of paragraphs (c)(3)(iii)(B)(*1*) and (*4*) of this section.

(*12*) Any other information, certifications, or statements as may be required by the form or its accompanying instructions in addition to, or in lieu of, the information and certifications described in this paragraph.

(B) *Withholding statement*—(*1*) [Reserved] For further guidance, see § 1.1471–3T(c)(3)(iii)(B)(*1*).

(*2*) [Reserved] For further guidance, see § 1.1471–3T(c)(3)(iii)(B)(*2*).

(*i*) [Reserved] For further guidance, see § 1.1471–3T(c)(3)(iii)(B)(*2*)(*i*).

(*ii*) [Reserved] For further guidance, see § 1.1471–3T(c)(3)(iii)(B)(*2*)(*ii*).

(*iii*) [Reserved] For further guidance, see § 1.1471–3T(c)(3)(iii)(B)(*2*)(*iii*).

(*3*) [Reserved] For further guidance, see § 1.1471–3T(c)(3)(iii)(B)(*3*).

(*4*) [Reserved] For further guidance, see § 1.1471–3T(c)(3)(iii)(B)(*4*).

(C) *Failure to provide allocation information.* A withholding certificate that fails to provide allocation information or any of the required documentation for one or more of the payees will not be treated as invalid with respect to the persons for whom valid documentation and allocation information is properly provided. The portion of the payment that is not reliably associated with underlying documentation or that is not properly allocated will be treated in accordance with the presumption rules set forth in paragraph (f) of this section. For example, assume a withholding certificate that is provided by a participating FFI that is an NQI includes an FFI withholding statement that indicates that 50 percent of the payment is allocable to payees that are exempt for purposes of chapter 4 but does not allocate the remaining 50 percent of the payment for purposes of chapter 4. In such case, the withholding agent may treat 50 percent of the payment as exempt from chapter 4 and the remaining 50 percent that was not allocated will be treated, under the presumption rules set forth in paragraph (f) of this section, as made to a pool of payees that are nonparticipating FFIs.

(D) *Special rules applicable to a withholding certificate of a QI that assumes primary withholding responsibility under chapter 3.* A QI that assumes primary withholding responsibility under chapter 3 for a payment may not make an election to be withheld upon, as described in § 1.1471–2(a)(2)(iii), with respect to that payment. Thus, if a QI assumes primary withholding responsibility under chapter 3 with respect to a payment of U.S. source FDAP income, in addition to the other requirements described in paragraph (c)(3)(iii)(A) of this section, a withholding agent can reliably associate the payment with a valid withholding certificate only when the QI has also indicated on the intermediary withholding certificate that it will assume primary withholding responsibility for that payment for purposes of chapter 4.

(E) *Special rules applicable to a withholding certificate of a QI that does not assume primary withholding responsibility under chapter 3.* A QI that does not assume primary withholding responsibility under chapter 3 with respect to a payment of U.S. source FDAP income will be required to make the election to be withheld upon with respect to that payment. Thus, if a QI does not assume primary withholding responsibility under chapter 3, a withholding agent can reliably associate a payment of U.S. source FDAP income with a valid withholding certificate only when, in addition to the other information required by paragraph (c)(3)(iii)(A) of this section, the withholding certificate indicates that the QI does not assume primary withholding responsibility for that payment for purposes of chapter 4.

(F) *Special rules applicable to a withholding certificate of a territory financial institution that agrees to be treated as a U.S. person.* A withholding agent may reliably associate a payment with an intermediary withholding certificate or flow-through withholding certificate of a territory financial institution that agrees to be treated as a U.S. person if, in addition to the other information required by paragraph (c)(3)(iii)(A) of this section, the certificate contains an EIN of the territory financial institution and a certification that the territory financial institution agrees to be treated as a U.S. person and accepts primary withholding responsibility with respect to the payment for purposes of both chapters 3 and 4.

(G) *Special rules applicable to a withholding certificate of a territory financial institution that does not agree to be treated as a U.S. person.* A withholding agent may reliably associate a payment with an intermediary withholding certificate or a flow-through withholding certificate of a territory financial institution that does not agree to be treated as a U.S. person if, in addition to the information required by paragraph (c)(3)(iii)(A) of this section, the certificate indicates that the institution has not agreed to be treated as a U.S. person for purposes of chapter 4 and the institution provides a withholding statement described in paragraphs (c)(3)(iii)(B)(*1*) and (*3*) of this section.

(H) *Special rules applicable to a withholding certificate of a U.S. branch treated as a U.S. person.* A withholding agent may reliably associate a payment with a withholding certificate of a U.S. branch that is treated as a U.S. person for purposes of §1.1441–1(b)(2)(iv) if, in addition to the other information required by paragraph (c)(2)(iii)(A) of this section; the certificate contains the EIN of the U.S. branch; the GIIN of the U.S. branch; and a certification that the U.S. branch is described in paragraph §1.1441–1(b)(2)(iv) and, accordingly, is required to accept primary withholding responsibility with respect to the payment for purposes of both chapters 3 and 4.

(iv) *Certificate for exempt status (Form W–8EXP).* A Form W–8EXP is valid only if it contains the name, address, and chapter 4 status of the payee, the relevant certifications or documentation, and any other requirements indicated in the instructions to the form, and is signed under penalties of perjury by a person with authority to sign for the payee.

(v) *Certificate for effectively connected income (Form W–8ECI).* A Form W–8ECI is valid only if, in addition to meeting the requirements in the instructions to the form, it contains the name, address, and TIN of the payee (other than a GIIN), represents that the amounts for which the certificate is furnished are effectively connected with the conduct of a trade or business in the United States and are includable in the payee's gross income for the taxable year (or are gross proceeds from the sale of property that can produce income that is effectively connected with the conduct of a trade or business in the United States), and is signed under penalties of perjury by a person with authority to sign for the payee.

(4) *Requirements for written statements.* A written statement is a statement by the payee, or other person receiving the payment, that provides the person's chapter 4 status and any other information reasonably requested by the withholding agent to fulfill its obligations under chapter 4 with respect to the payment, such as whether the person is receiving the payment as a beneficial owner, intermediary, or flow-through entity. A written statement is valid only if it is provided by a person with respect to an offshore obligation, contains the name of the person, the person's address, the certifications relevant to the person's chapter 4 status (as contained on a withholding certificate), any additional information required with respect to the chapter 4 status claimed as provided under paragraph (d) of this section (for example, a GIIN), and a signed and dated certification that the information provided on the form is accurate and will be updated by the individual within 30 days of a change in circumstances that causes the form to become incorrect. A written statement may be submitted in any form that is acceptable to the withholding agent, including a statement made as part of the account opening documentation. A written statement may be used in lieu of a withholding certificate only to the extent provided under §1.1471–3(d), as applicable to the chapter 4 status claimed.

(5) *Requirements for documentary evidence.* Documentary evidence with respect to a payee is only reliable if it contains sufficient information to support the payee's claim of chapter 4 status.

(i) *Foreign status.* Acceptable documentary evidence supporting a claim of foreign status includes the following types of documentation if the documentation contains a permanent residence address for the person named on the documentation (or indicates the country in which a person that is an individual is a resident or citizen or the country in which a person that is an entity has a permanent residence or is incorporated or organized, if the withholding agent has otherwise obtained a current permanent residence address for the person)—

(A) *Certificate of residence.* A certificate of residence issued by an appropriate tax official of the country in which the payee claims to be a resident that indicates that the payee has filed its most recent income tax return as a resident of that country;

(B) *Individual government identification.* With respect to an individual, any valid identification issued by an authorized government body (for example, a government or agency thereof, or

a municipality), that is typically used for identification purposes;

(C) *QI documentation.* With respect to an account maintained in a jurisdiction with anti-money laundering rules that have been approved by the IRS in connection with a QI agreement (as referenced in §1.1441–1(e)(5)(iii)), any of the documents other than a Form W–8 or W–9 referenced in the jurisdiction's attachment to the QI agreement for identifying individuals or entities;

(D) *Entity government documentation.* With respect to an entity, any official documentation issued by an authorized government body (for example, a government or agency thereof, or a municipality); and

(E) *Third-party credit report.* For a payment made with respect to an offshore obligation to an individual, a third-party credit report that is obtained pursuant to the conditions described in §1.1471–4(c)(4)(ii).

(ii) *Chapter 4 status.* Acceptable documentary evidence supporting an entity's claim of chapter 4 status includes—

(A) *General documentary evidence.* With respect to an entity other than a participating FFI or registered deemed-compliant FFI, any organizational document (such as articles of incorporation or a trust agreement), financial statement, third-party credit report, letter from a government agency, or statement from a government Web site, agency, or registrar (such as an SEC report) to the extent permitted in paragraphs (d) and (e) of this section;

(B) [Reserved] For further guidance, see §1.1471–3T(c)(5)(ii)(B).

(C) *Payee-specific documentary evidence.* A letter from an auditor or attorney with a location in the United States that is not related to the withholding agent or payee and is subject to the authority of a regulatory body that governs the auditor's or attorney's review of the chapter 4 status of the payee, any bankruptcy filing, corporate resolution, copy of a stock market index or other document to the extent permitted in the specific payee documentation requirements in paragraph (d) and (e) of this section.

(6) *Applicable rules for withholding certificates, written statements, and documentary evidence.* The provisions in this paragraph (c)(6) describe standards generally applicable to withholding certificates on Forms W–8 (or substitute forms), written statements, and documentary evidence furnished to establish the payee's chapter 4 status. These provisions do not apply to Forms W–9 (or their substitutes). For corresponding provisions regarding the Form W–9 (or a substitute Form W–9), see section 3406 and the regulations thereunder.

(i) *Who may sign the withholding certificate or written statement.* A withholding certificate (including an acceptable substitute) or written statement may be signed by any person authorized to sign a declaration under penalties of perjury on behalf of the person whose name is on the certificate or written statement, as provided in sections 6061 through 6063 and the regulations thereunder. A person authorized to sign a withholding certificate or written statement includes an officer or director of a corporation, a partner of a partnership, a trustee of a trust, an executor of an estate, any foreign equivalent of the former titles, and any other person that has been provided written authorization by the individual or entity named on the certificate or written statement to sign documentation on such person's behalf.

(ii) *Period of validity*—(A) *General rule.* Except as provided otherwise in paragraphs (c)(6)(ii)(B) and (C), a withholding certificate or written statement will remain valid until the last day of the third calendar year following the year in which the withholding certificate or written statement is signed. Documentary evidence is generally valid until the last day of the third calendar year following the year in which the documentary evidence is provided to the withholding agent. Nevertheless, documentary evidence that contains an expiration date may be treated as valid until that expiration date if doing so would provide a longer period of validity than the three-year period. Notwithstanding the validity periods permitted by paragraphs (c)(6)(ii)(A) through (D) of this

section, a withholding certificate, written statement, and documentary evidence will cease to be valid if the withholding agent has knowledge of a change in circumstances that makes the information on the documentation incorrect. Therefore, a withholding agent is required to institute procedures to ensure that any change to the customer master files that constitutes a change in circumstances described in paragraph (c)(6)(ii)(E) of this section is identified by the withholding agent. In addition, a withholding agent is required to notify any person providing documentation of the person's obligation to notify the withholding agent of a change in circumstances.

(B) *Indefinite validity*. Notwithstanding paragraph (c)(6)(ii)(A) of this section, the following certificates (or parts of certificates), written statements, or documentary evidence shall remain valid until the withholding agent has knowledge of a change in circumstances that makes the information on the documentation incorrect—

(*1*) A withholding certificate or written statement provided by a participating FFI or registered deemed-compliant FFI that has furnished a valid GIIN that has been verified by the withholding agent in the manner set forth in paragraph (e)(3) of this section;

(*2*) A beneficial owner withholding certificate and documentary evidence supporting the individual's claim of foreign status when both are provided together by an individual claiming foreign status, if the withholding agent does not have a current U.S. residence or U.S. mailing address for the payee and does not have one or more current U.S. telephone numbers that are the only telephone numbers the withholding agent has for the payee;

(*3*) [Reserved] For further guidance, see §1.1471–3T(c)(6)(ii)(B)(*3*).

(*4*) A withholding certificate of an intermediary, flow-through entity, or U.S. branch (not including the withholding certificates, written statements, or documentary evidence of the payees, or withholding statements associated with the withholding certificate);

(*5*) [Reserved] For further guidance, see §1.1471–3T(c)(6)(ii)(B)(*5*).

(*6*) [Reserved] For further guidance, see §1.1471–3T(c)(6)(ii)(B)(*6*).

(*7*) [Reserved] For further guidance, see §1.1471–3T(c)(6)(ii)(B)(*7*).

(C) *Indefinite validity in the case of certain offshore obligations*. Notwithstanding paragraph (c)(6)(ii)(A) of this section, the following certificates, written statements, and documentary evidence that are provided with respect to offshore obligations shall remain valid until a change in circumstances occurs that makes the information on the documentation incorrect—

(*1*) A withholding certificate or documentary evidence provided by an individual claiming foreign status if the withholding agent does not have a current U.S. residence or U.S. mailing address for the payee, does not have one or more current U.S. telephone numbers that are the only telephone numbers the withholding agent has for the payee, and has not been provided standing instructions to make a payment in the United States for the obligation;

(*2*) A withholding certificate, written statement, or documentary evidence provided by one of the following entities if such entity is the payee—

(*i*) A retirement fund described in §1.1471–6(f) or an entity that is wholly owned by such a retirement fund;

(*ii*) An excepted nonfinancial group entity described in §1.1471–5(e)(5)(i);

(iii) A section 501(c) entity described in §1.1471–5(e)(v);

(*iv*) A non-profit organization described in §1.1471–5(e)(5)(vi);

(*v*) A nonreporting IGA FFI;

(*vi*) A territory financial institution;

(*vii*) An NFFE whose stock is regularly traded as described in §1.1472–1(c)(1)(i);

(*viii*) An NFFE affiliate described in §1.1472–1(c)(1)(ii);

(*ix*) An active NFFE that the withholding agent has determined, through its AML due diligence, is engaged in a business other than that of a financial institution, and ongoing monitoring of the account for purposes of AML due diligence does not indicate that the determination is incorrect; and

(*x*) A sponsored FFI described in §1.1471–5(f)(2)(iii);

(*3*) [Reserved] For further guidance, see §1.1471–3T(c)(6)(ii)(C)(*3*).

(*4*) [Reserved] For further guidance, see § 1.1471–3T(c)(6)(ii)(C)(*4*).

(*5*) [Reserved] For further guidance, see § 1.1471–3T(c)(6)(ii)(C)(*5*).

(D) *Exception for certificate for effectively connected income.* Notwithstanding paragraphs (c)(6)(ii)(B) to (C) of this section, the period of validity of a withholding certificate furnished to a withholding agent to claim a reduced rate of withholding for income that is effectively connected with the conduct of a trade or business within the United States shall be limited to the three-year period described in paragraph (c)(6)(ii)(A) of this section.

(E) *Change in circumstances—(1) Defined.* For purposes of this chapter, a person is considered to have a change in circumstances only if such change would affect the chapter 4 status of the person. A change in circumstances includes any change that results in the addition of information described in paragraph (e)(4) relevant to a person's claim of foreign status (that is, U.S. indicia that is not otherwise cured by documentation on file and that is relevant to the chapter 4 status claimed) or otherwise conflicts with such person's claim of chapter 4 status. Unless stated otherwise, a change of address or telephone number is a change in circumstances for purposes of this paragraph (c)(6)(ii)(E) only if it changes to an address or telephone number in the United States. A change in circumstances affecting the withholding information provided to the withholding agent, including allocation information or withholding pools contained in a withholding statement or owner reporting statement, will terminate the validity of the withholding certificate with respect to the information that is no longer reliable, until the information is updated.

(*2*) *Obligation to notify withholding agent of a change in circumstances.* If a change in circumstances makes any information on a certificate or other documentation incorrect, then the person whose name is on the certificate or other documentation must inform the withholding agent within 30 days of the change and furnish a new certificate, a new written statement, or new documentary evidence. If an intermediary or a flow-through entity becomes aware that a certificate or other appropriate documentation it has furnished to the person from whom it collects a payment is no longer valid because of a change in the circumstances of the person who issued the certificate or furnished the other appropriate documentation, then the intermediary or flow-through entity must notify the person from whom it collects the payment of the change in circumstances within 30 days of the date that it knows or has reason to know of the change in circumstances. It must also obtain a new withholding certificate or new appropriate documentation to replace the existing certificate or documentation the validity of which has expired due to the change in circumstances.

(*3*) [Reserved] For further guidance, see § 1.1471–3T(c)(6)(ii)(E)(*3*).

(iii) *Record Retention*—(A) *In general.* A withholding agent must retain each withholding certificate, written statement, or copy of documentary evidence for as long as it may be relevant to the determination of the withholding agent's tax liability under section 1474(a) and § 1.1474–1. A withholding agent may retain an original, certified copy, or photocopy (including a microfiche, electronic scan, or similar means of electronic storage) of the withholding certificate, written statement, or documentary evidence. With respect to documentary evidence, the withholding agent must also note in its records the date on which the document was received and reviewed. Any documentation that is stored electronically must be made available in hard copy form to the IRS upon request during an examination.

(B) *Exception for documentary evidence received with respect to offshore obligations.* A withholding agent that is making a payment with respect to an offshore obligation and is not required to retain copies of documentation reviewed pursuant to its AML due diligence, may, in lieu of retaining the documents as set forth in paragraph (c)(6)(iii)(A), retain a notation of the type of documentation reviewed, the date the documentation was reviewed, the document's identification number (if any) (for example, a passport number), and whether such documentation

contained any U.S. indicia. The previous sentence applies with respect to an offshore obligation that is also a preexisting obligation, except, in such case, the requirement to record whether the documentation contained U.S. indicia does not apply. See also § 1.1471–4(c)(2)(iv) for the record retention requirements of a participating FFI.

(iv) [Reserved] For further guidance, see § 1.1471–3T(c)(6)(iv).

(v) *Acceptable substitute withholding certificate*—(A) [Reserved] For further guidance, see § 1.1471–3T(c)(6)(v)(A).

(B) [Reserved] For further guidance, see § 1.1471–3T(c)(6)(v)(B).

(vi) *Electronic confirmation of TIN on withholding certificate.* The Commissioner may prescribe procedures in a revenue procedure or other appropriate guidance to require a withholding agent to confirm electronically with the IRS information concerning any TIN stated on a withholding certificate.

(vii) *Reliance on a prior version of a withholding certificate.* Upon the issuance by the IRS of an updated version of a withholding certificate, a withholding agent may continue to accept the prior version of the withholding certificate for six months after the revision date shown on the updated withholding certificate, unless the IRS has issued guidance that indicates otherwise, and may continue to rely upon a previously signed prior version of the withholding certificate until its period of validity expires.

(7) *Curing documentation errors.* The provisions in this paragraph (c)(7) describe standards generally applicable to withholding certificates (Forms W–8 or substitute forms), written statements, and documentary evidence furnished to establish the payee's chapter 4 status. These provisions do not apply to Forms W–9 (or their substitutes). For corresponding provisions regarding the Form W–9 (or a substitute Form W–9), see section 3406 and the regulations thereunder.

(i) *Curing inconsequential errors on a withholding certificate.* A withholding agent may treat a withholding certificate as valid, notwithstanding that the withholding certificate contains an inconsequential error, if the withholding agent has sufficient documentation on file to supplement the information missing from the withholding certificate due to the error. In such case, the documentation relied upon to cure the inconsequential error must be conclusive. For example, a withholding certificate in which the individual submitting the form abbreviated the country of residence may be treated as valid, notwithstanding the abbreviation, if the withholding agent has government issued identification for the person from a country that reasonably matches the abbreviation. On the other hand, an abbreviation for the country of residence that does not reasonably match the country of residence shown on the person's passport is not an inconsequential error. A failure to select an entity type on a withholding certificate is not an inconsequential error, even if the withholding agent has an organization document for the entity that provides sufficient information to determine the person's entity type, if the person was eligible to make an election under § 301.7701–3(c)(1)(i) of this chapter (that is, a check-the-box election). A failure to check a box to make a required certification on the withholding certificate or to provide a country of residence or a country under which treaty benefits are sought is not an inconsequential error. In addition, information on a withholding certificate that contradicts other information contained on the withholding certificate or in the customer master file is not an inconsequential error.

(ii) *Documentation received after the time of payment.* Proof that withholding was not required under the provisions of chapter 4 and the regulations thereunder also may be established after the date of payment by the withholding agent on the basis of a valid withholding certificate and/or other appropriate documentation that was furnished after the date of payment but that was effective as of the date of payment. A withholding certificate furnished after the date of payment will be considered effective as of the date of the payment if the certificate contains a signed affidavit (either at the bottom of the form or on an attached page) that states that the information and representations contained on the certificate were accurate as of the time of

the payment. A certificate obtained within 30 days after the date of the payment will not be considered to be unreliable solely because it does not contain an affidavit. However, in the case of a withholding certificate of an individual received more than a year after the date of payment, the withholding agent will be required to obtain, in addition to the withholding certificate and affidavit, documentary evidence described in paragraph (c)(5)(i) of this section that supports the individual's claim of foreign status. In the case of a withholding certificate of an entity received more than a year after the date of payment, the withholding agent will be required to obtain, in addition to the withholding certificate and affidavit, documentary evidence specified in paragraph (c)(5)(ii) of this section that supports the chapter 4 status claimed. If documentation other than a withholding certificate is submitted from a payee more than a year after the date of payment, the withholding agent will be required to also obtain from the payee a withholding certificate and affidavit supporting the chapter 4 status claimed as of the date of the payment.

(8) *Documentation furnished on account-by-account basis unless exception provided for sharing documentation within expanded affiliated group.* Except as otherwise provided in this paragraph (c)(8), a withholding agent that is a financial institution with which a customer may open an account must obtain withholding certificates, written statements, Forms W–9, or documentary evidence on an account-by-account basis. Notwithstanding the previous sentence, a withholding agent may rely upon the withholding certificate, written statement, or documentary evidence furnished by a customer under any one or more of the circumstances described in this paragraph (c)(8).

(i) *Single branch systems.* A withholding agent may rely on documentation furnished by a customer for another account if both accounts are held at the same branch location and both accounts are treated as consolidated obligations.

(ii) *Universal account systems.* A withholding agent may rely on documentation furnished by a customer for an account held at another branch location of the same withholding agent or at a branch location of a member of the expanded affiliated group of the withholding agent if the withholding agent treats all accounts that share documentation as consolidated obligations and the withholding agent and the other branch location or expanded affiliated group member are part of a universal account system that uses a customer identifier that can be used to retrieve systematically all other accounts of the customer. A withholding agent that opts to rely upon the chapter 4 status designated for the payee in the universal account system without obtaining and reviewing copies of the documentation supporting the status must be able to produce all documentation (or a notation of the documentary evidence reviewed if the withholding agent is not required to retain copies of the documentary evidence) relevant to the chapter 4 status claimed upon request by the IRS and will be liable for any underwithholding that results from any failure to assign the correct status based upon the available information.

(iii) *Shared account systems.* A withholding agent may rely on documentation furnished by a customer for an account held at another branch location of the same withholding agent or at a branch location of a member of the expanded affiliated group of the withholding agent if the withholding agent treats all accounts that share documentation as consolidated accounts and the withholding agent and the other branch location or expanded affiliated group member share an information system, electronic or otherwise, that is described in this paragraph (c)(8)(iii). The system must allow the withholding agent to easily access data regarding the nature of the documentation, the information contained in the documentation (including a copy of the documentation itself), and the validity status of the documentation. The information system must also allow the withholding agent to easily transmit data into the system regarding any facts of which it becomes aware that may affect the reliability of the documentation. The withholding

agent must be able to establish, to the extent applicable, how and when it has transmitted data regarding any facts of which it became aware that may affect the reliability of the documentation and must be able to establish that any data it has transmitted to the information system has been processed and appropriate due diligence has been exercised regarding the validity of the documentation. A withholding agent that opts to rely upon the chapter 4 status designated for the payee in the shared account system without obtaining and reviewing copies of the documentation supporting the status must be able to produce all documentation (or a notation of the documentary evidence reviewed if the withholding agent is not required to retain copies of the documentary evidence) relevant to the chapter 4 status claimed upon request by the IRS and will be liable for any underwithholding that results from any failure to assign the correct status based upon the available information.

(iv) *Document sharing for gross proceeds*. [Reserved]

(v) [Reserved] For further guidance, see §1.1471–3T(c)(8)(v).

(9) *Reliance on documentation collected by or certifications provided by other persons*—(i) *Shared documentation system maintained by an agent*. A withholding agent may rely on documentation collected by an agent (including a fund advisor for mutual funds, hedge funds, or a private equity group) of the withholding agent. The agent may retain the documentation as part of an information system maintained for a single withholding agent or multiple withholding agents provided that under the system, any withholding agent on behalf of which the agent retains documentation may easily access data regarding the nature of the documentation, the information contained in the documentation (including a copy of the documentation itself) and its validity, and must allow such withholding agent to easily transmit data, either directly into an electronic system or by providing such information to the agent, regarding any facts of which it becomes aware that may affect the reliability of the documentation. The withholding agent must be able to establish, to the extent applicable, how and when it has transmitted data regarding any facts of which it became aware that may affect the reliability of the documentation and must be able to establish that any data it has transmitted has been processed and appropriate due diligence has been exercised regarding the validity of the documentation. The agent must have a system in effect to ensure that any information it receives regarding facts that affect the reliability of the documentation or the chapter 4 status assigned to the customer are provided to all withholding agents for which the agent retains the documentation and any chapter 4 status assigned by the agent is amended to incorporate such information. A withholding agent that opts to rely upon the chapter 4 status assigned by the agent without obtaining and reviewing copies of the documentation supporting the status must be able to produce all documentation relevant to the chapter 4 status claimed upon request by the IRS and will be liable for any underwithholding that results from a failure of the agent to assign the correct status based upon the available information. See §1.1474–1(a) for a withholding agent's liability when it relies upon an agent for chapter 4 purposes. This paragraph (c)(9)(i) does not apply to a withholding certificate provided by a QI, a withholding certificate provided by a territory financial institution that elects to be treated as a U.S. person, or any withholding statement, unless the person submitting the form specifically identifies the withholding agents for which the certificates and/or statements are provided.

(ii) *Third-party data providers*. A withholding agent may rely upon documentation collected by a third-party data provider with respect to an entity, subject to the conditions described in this paragraph (c)(9)(ii).

(A) The third-party data provider must have collected documentation that is sufficient to determine the chapter 4 status of the entity under paragraph (d) of this section.

(B) [Reserved] For further guidance, see §1.1471–3T(c)(9)(ii)(B).

(C) The third-party data provider must notify the entity submitting the documentation that such entity must

notify the third-party data provider in the event of a change in circumstances within 30 days of the change in circumstances, and the third-party data provider must be obligated under its contract with the withholding agent to notify the withholding agent if a change in circumstances occurs.

(D) The withholding agent may not rely upon a chapter 4 status provided by a third-party data provider if the withholding agent knows or has reason to know that the chapter 4 status is unreliable or incorrect based on information in the withholding agent's account records, or if the documentation or information provided by the third-party data provider does not support the chapter 4 status claimed.

(E) The withholding agent must be able to submit copies of the documentation received from the third-party data provider upon request to the IRS and will remain liable for any underwithholding that occurs as a result of its reliance on information provided by the third-party data provider if the documentation is invalid or unreliable.

(F) This paragraph (c)(9)(ii) does not apply to a withholding statement or a withholding certificate that contains an election to accept withholding or reporting responsibility (such as one made by a QI, territory financial institution, or U.S. branch) provided by a third-party data provider.

(iii) *Reliance on certification provided by introducing brokers*—(A) A withholding agent may rely on a certification of a broker indicating the broker's determination of a payee's chapter 4 status and indicating that the broker holds valid documentation sufficient to determine the payee's chapter 4 status under paragraph (d) of this section with respect to any readily tradable instrument as defined in § 31.3406(h)–1(d) of this chapter if the conditions in paragraph (c)(9)(iii)(B) of this section are satisfied and the broker is either—

(*1*) A U.S. person (including a U.S. branch that is treated as a U.S. person) that is acting as the agent of the payee; or

(*2*) A participating FFI or a reporting Model 1 FFI that is acting as the agent of the payee with respect to an obligation and receiving all payments from the withholding agent with respect to such obligation as an intermediary on behalf of the payee.

(B) The certification from the broker must be in writing or in electronic form and contain all of the information required of a chapter 4 withholding statement described in paragraph (c)(3)(iii)(B)(*3*). Notwithstanding this paragraph (c)(9)(iii), a withholding agent may not rely upon a certification provided by a broker if it knows or has reason to know that the broker has not obtained valid documentation as represented or the information contained in the certification is otherwise inaccurate. A broker that chooses to provide a certification under this paragraph (c)(9)(iii) will be responsible for applying the rules set forth in the regulations under section 1471 and 1472 to the withholding certificates, written statements, or documentary evidence obtained from the payee and shall be liable for any underwithholding that occurs as a result of the broker's failure to reasonably apply such rules.

(iv) *Reliance on documentation and certifications provided between principals and agents*—(A) *In general.* Subject to the conditions under § 1.1474–1(a)(3), a withholding agent is permitted to use an agent to fulfill its chapter 4 obligations and such agent's actions are imputed to the principal. However, an agent that makes a payment pursuant to an agency arrangement (paying agent) is also a withholding agent with respect to the payment unless an exception under § 1.1473–1(d) applies. Therefore, the paying agent will have its own obligation to determine the chapter 4 status of the payee and withhold upon the payment if required. Although a paying agent is generally a withholding agent for purposes of chapter 4, the financial accounts to which it makes payments are not necessarily financial accounts of the paying agent. See the rules under § 1.1471–5(b)(5) to determine when a financial institution maintains a financial account. In addition, the status of a payment as made with respect to an offshore obligation or as a preexisting obligation will be determined based on such obligation's status in relation to the principal. Further, the due diligence required with

respect to the payment will be determined by the status of the principal and not the paying agent. Consequently, a payment that is made, for example, by a paying agent that is a foreign entity on behalf of a principal that is a U.S. withholding agent will be subject to the due diligence applicable to the principal. See §1.1474–1(a)(3) for rules regarding the reporting obligations of a principal and agent in the case of a payment made by an agent of behalf of a principal.

(B) *Reliance upon certification of the principal.* An agent that makes a payment on behalf of a principal that it may treat, pursuant to paragraph (d) of this section, as a U.S. withholding agent, participating FFI, or reporting Model 1 FFI may rely upon a certification provided by the principal indicating that the principal has obtained valid documentation sufficient to determine the chapter 4 status of the payee and may rely upon the principal's determination as to the payee's chapter 4 status. In such a case, the agent will be permitted to rely upon the certification provided by the principal when determining whether it is required to withhold on the payment and will not be liable for any underwithholding that occurs as a result of the principal's failure to properly determine the chapter 4 status of the payee unless the agent knows or has reason to know the certification provided by the principal is inaccurate.

(C) *Document sharing.* In lieu of obtaining a certification from the principal as described in paragraph (c)(9)(iv)(B) of this section, or when reliance upon such certification is not permitted, an agent that makes a payment on behalf of a principal may rely upon copies of documentation provided to the principal with respect to the payment. However, in such case, both the principal and the agent are obligated to determine the chapter 4 status of the payee based upon the documentation and ensure that adequate withholding occurs with respect to the payment. While a principal is imputed the knowledge of the agent with respect to the payment, the agent is not imputed the knowledge of the principal.

(D) *Examples*—(1) *Example 1. Paying agent that does not collect documentation.* A fund, P, that is a participating FFI contracts with a U.S. person, A, to make payments to its account holders with respect to their equity interests in P. P contracts with another agent, B, to obtain documentation sufficient to determine the chapter 4 status of such account holders. Based on the documentation it collects, B determines that none of P's account holders are subject to withholding. P provides a certification to A indicating that it has obtained documentation sufficient to determine the chapter 4 status of P's account holders and that each payee is not subject to withholding under chapter 4. As the actions of B, as P's agent, are attributed to P, P may provide a certification to A indicating that it has determined the chapter 4 status of its payees, even if it is B, and not P, who made the determinations. However, P will be liable for any underwithholding that results from a failure by B to reasonably apply the rules under chapter 4. A is permitted to rely upon the certification provided by P and, accordingly, is not required to withhold on the payments made to P's account holders and would not be liable for any underwithholding that results if the determinations made by B are incorrect unless A had reason to know that chapter 4 status claimed was inaccurate.

(ii) *Example 2. Paying agent that collects documentation.* A fund, P, that is a participating FFI contracts with a U.S. person, A, to make a payment to its account holders on its behalf. P also contracts with A to obtain documentation sufficient to determine the chapter 4 status of P's account holders. Based on the documentation it collects, A determines that none of P's account holders are subject to withholding. As the actions of A, as P's agent, are imputed to P, P will be liable for any underwithholding that results from a failure by A to reasonably apply the rules under chapter 4. P is also required to retain the documentation upon which A relied in determining the chapter 4 status of its account holders. Because A performed the due diligence on behalf of P, A will have reason to know if any of the chapter 4 determinations made

based on the documentation received were made incorrectly, and, as a withholding agent with respect to the payment, is liable, in addition to P, for any underwithholding that results from an incorrect determination that withholding was not required. This result applies regardless of whether A retains copies of the documentation obtained with respect to P's account holders or receives a certification from P indicating that P has obtained documentation sufficient to determine the chapter 4 status of its account holders and that each payee is not subject to withholding under chapter 4.

(v) [Reserved] For further guidance, see § 1.1471–3T(c)(9)(v).

(d) *Documentation requirements to establish payee's chapter 4 status.* Unless the withholding agent knows or has reason to know otherwise, a withholding agent may rely on the provisions of this paragraph (d) to determine the chapter 4 status of a payee (or other person that receives a payment). Except as otherwise provided in this paragraph (d), a withholding agent is required to obtain a valid withholding certificate or a Form W–9 from a payee in order to treat the payee as having a particular chapter 4 status. Paragraphs (d)(1) through (12) of this section indicate when it is appropriate for a withholding agent to rely upon a written statement, documentary evidence, or other information in lieu of a Form W–8 or W–9. Paragraphs (d)(1) through (12) of this section also prescribe additional documentation requirements that must be met in certain cases in order to treat a payee as having a specific chapter 4 status and specific standards of knowledge that apply to a particular payee, in addition to the general standards of knowledge set forth in paragraph (e) of this section. This paragraph (d) also provides the circumstances in which special documentation rules are permitted with respect to preexisting obligations. A withholding agent may not rely on documentation described in this paragraph (d) if the documentation is not valid or cannot reliably be associated with the payment pursuant to the requirements of paragraph (c) of this section, or the withholding agent knows or has reason to know that such documentation is incorrect or unreliable as described in paragraphs (d) and (e) of this section. If the chapter 4 status of a payee cannot be determined under this paragraph (d) based on documentation received, a withholding agent must apply the presumption rules in paragraph (f) to determine the chapter 4 status of the payee.

(1) [Reserved] For further guidance, see § 1.1471–3T(d)(1).

(2) *Identification of U.S. persons*—(i) [Reserved] For further guidance, see § 1.1471–3T(d)(2)(i).

(ii) *Reliance on documentary evidence.* A withholding agent may also treat the payee as a U.S. person that is other than a specified U.S. person if the withholding agent has documentary evidence described in paragraphs (c)(5)(i)(C) and (D) of this section or general documentary evidence (as described in paragraph (c)(5)(ii)(A) of this section) that both establishes that the payee is a U.S. person and establishes (either through the documentation or the application of the rules in § 1.6049–4(c)(1)(ii) or paragraph (f)(3) of this section) that the payee is an exempt recipient. For purposes of the previous sentence, an exempt recipient means with respect to a withholding agent other than a participating FFI or registered deemed-compliant FFI, an exempt recipient under § 1.6049–4(c)(1)(ii) or, with respect to a withholding agent that is a participating FFI or registered deemed-compliant FFI, a U.S. person other than a specified U.S. person as described under § 1.1473–1(c).

(iii) [Reserved] For further guidance, see § 1.1471–3T(d)(2)(iii).

(3) *Identification of individuals that are foreign persons*—(i) *In general.* A withholding agent may treat a payee as an individual that is a foreign person if the withholding agent has a withholding certificate identifying the payee as such a person.

(ii) *Exception for offshore obligations.* A withholding agent that makes a payment with respect to an offshore obligation may treat the payee as an individual that is a foreign person if it obtains documentary evidence supporting the payee's claim of status as a foreign individual (as described in paragraph (c)(5)(i)) or if the payee is presumed to

be an individual that is a foreign person under the presumption rules set forth in paragraph (f) of this section.

(4) *Identification of participating FFIs and registered deemed-compliant FFIs*—(i) [Reserved] For further guidance, see §1.1471–3T(d)(4)(i).

(ii) [Reserved] For further guidance, see §1.1471–3T(d)(4)(ii).

(iii) [Reserved] For further guidance, see §1.1471–3T(d)(4)(iii).

(A) The payee provides the withholding agent with—

(*1*) [Reserved] For further guidance, see §1.1471–3T(d)(4)(iii)(A)(*1*).

(*2*) Documentary evidence supporting the payee's claim of foreign status; and

(B) The withholding agent verifies the GIIN in the manner described in paragraph (e)(3) of this section.

(iv) *Exceptions for payments to reporting Model 1 FFIs.* (A) [Reserved] For further guidance, see §1.1471–3T(d)(4)(iv)(A).

(B) For payments made prior to January 1, 2015, with respect to a preexisting obligation, a withholding agent may treat a payee as a reporting Model 1 FFI if it obtains a pre-FATCA Form W–8 from the payee, and the payee indicates (either orally or in writing) that it is a reporting Model 1 FFI and the country in which it is a reporting Model 1 FFI, regardless of whether the certificate contains a GIIN for the payee.

(C) [Reserved] For further guidance, see §1.1471–3T(d)(4)(iv)(C).

(D) [Reserved] For further guidance, see §1.1471–3T(d)(4)(iv)(D).

(v) [Reserved] For further guidance, see §1.1471–3T(d)(4)(v).

(5) *Identification of certified deemed-compliant FFIs*—(i) [Reserved] For further guidance, see §1.1471–3T(d)(5)(i).

(ii) [Reserved] For further guidance, see §1.1471–3T(d)(5)(ii) through (d)(5)(ii)(B).

(A) [Reserved] For further guidance, see §1.1471–3T(d)(5)(ii)(A).

(B) [Reserved] For further guidance, see §1.1471–3T(d)(5)(ii)(B).

(iii) [Reserved] For further guidance, see §1.1471–3T(d)(5)(iii) through (d)(5)(iii)(B).

(6) *Identification of owner-documented FFIs*—(i) *In general.* A withholding agent may treat a payee as an owner-documented FFI if all the following requirements of paragraphs (d)(6)(i)(A) through (F) of this section are met. A withholding agent may not rely upon a withholding certificate to treat a payee as an owner-documented FFI, either in whole or in part, if the withholding certificate does not contain all of the information and associated documentation required by paragraphs (d)(6)(i)(A), (C), and (D) of this section.

(A) The withholding agent has a withholding certificate that identifies the payee as an owner-documented FFI that is not acting as an intermediary;

(B) The withholding agent is a U.S. financial institution, participating FFI, or reporting Model 1 FFI that agrees pursuant to §1.1471–5(f)(3) to act as a designated withholding agent with respect to the payee;

(C) The payee submits to the withholding agent an FFI owner reporting statement that meets the requirements of paragraph (d)(6)(iv) of this section;

(D) The payee submits to the withholding agent valid documentation meeting the requirements of paragraph (d)(6)(iii) of this section with respect to each person identified on the FFI owner reporting statement;

(E) The withholding agent does not know or have reason to know that the payee (or any other FFI that is an owner of the payee and that the designated withholding agent is treating as an owner-documented FFI) maintains any financial account for a nonparticipating FFI; and

(F) The withholding agent does not know or have reason to know that the payee is a member of an expanded affiliated group with any other FFI other than an FFI that is also treated as an owner-documented FFI by the withholding agent or that the FFI has any specified U.S. persons that own an equity interest in the FFI or a debt interest (other than a debt interest that is not a financial account or that has a balance or value not exceeding $50,000) in the FFI other than those identified on the FFI owner reporting statement described in paragraph (d)(6)(iv) of this section.

(ii) *Auditor's letter substitute.* A payee may, in lieu of providing an FFI owner reporting statement and documentation for each owner of the FFI as described in paragraphs (d)(6)(i)(C) and

(D) of this section, provide a letter from an auditor or an attorney that is licensed in the United States or whose firm has a location in the United States, signed no more than four years prior to the date of the payment, that certifies that the firm or representative has reviewed the payee's documentation with respect to all of its owners and debt holders described in paragraph (d)(6)(iv) of this section in accordance with §1.1471–4(c) and that the payee meets the requirements of §1.1471–5(f)(3). The payee must also provide an FFI owner reporting statement and a Form W–9, with any applicable waiver, for each specified U.S. person that owns a direct or indirect interest in the payee or that holds debt interests described in paragraph (d)(6)(iv) of this section. A withholding agent may rely upon the letter described in this paragraph (d)(6)(ii) if it does not know or have reason to know that any of the information contained in the letter is unreliable or incorrect.

(iii) *Documentation for owners and debt holders of payee.* Acceptable documentation for an individual owning an equity interest in the payee or a debt holder described in paragraph (d)(6)(iv) of this section means a valid withholding certificate, valid Form W–9 (including any necessary waiver), or documentary evidence establishing the foreign status of the individual as set forth in paragraph (d)(3)(ii) of this section (regardless of whether the payment is made with respect to an offshore obligation). Acceptable documentation for a specified U.S. person means a valid Form W–9 (including any necessary waiver). Acceptable documentation for all other persons owning an equity or debt interest in the payee means documentation described in this paragraph (d), applicable to the chapter 4 status claimed by the person. The rules for reliably associating a payment with a withholding certificate or documentary evidence set forth in paragraph (c) of this section, the rules for payee documentation provided in this paragraph (d), and the standards of knowledge set forth in paragraph (e) of this section will apply to documentation submitted by the owners and debt holders by substituting the phrase ''owner of the payee'' or ''debt holder'' for ''payee.''

(iv) *Content of FFI owner reporting statement.* The FFI owner reporting statement provided by an owner-documented FFI must contain the information required by this paragraph (d)(6)(iv) and is subject to the general rules applicable to all withholding statements described in paragraph (c)(3)(iii)(B)(*1*) of this section. An FFI that is a partnership, simple trust, or grantor trust may substitute an NWP withholding statement described in §1.1441–5(c)(3)(iv) or a foreign simple trust or foreign grantor trust withholding statement described in §1.1441–5(e)(5)(iv) for the FFI owner reporting statement, provided that the NWP withholding certificate or foreign simple trust or foreign grantor trust withholding certificate contains all of the information required in this paragraph (d)(6)(iv). The owner reporting statement will expire on the last day of the third calendar year following the year in which the statement was provided to the withholding agent unless an exception in paragraph (c)(6)(ii) of this section (for example, accounts with a balance or value of $1,000,000 or less) or this paragraph (d)(6) applies. The owner-documented FFI will also be required to provide the withholding agent with an updated owner reporting statement if there is a change in circumstances as required under paragraph (c)(6)(ii)(E) of this section.

(A) The FFI owner reporting statement must provide the following information:

(*1*) The name, address, TIN (if any), and chapter 4 status of every individual and specified U.S. person that owns a direct or indirect equity interest in the payee (looking through all entities other than specified U.S. persons).

(*2*) The name, address, TIN (if any), and chapter 4 status of every individual and specified U.S. person that owns a debt interest in the payee (including any indirect debt interest, which includes debt interests in any entity that directly or indirectly owns the payee or any direct or indirect equity interest in a debt holder of the payee), in either such case if the debt interest constitutes a financial account in excess of

$50,000 (disregarding all such debt interests owned by participating FFIs, registered deemed-compliant FFIs, certified deemed-compliant FFIs, excepted NFFEs, exempt beneficial owners, or U.S. persons other than specified U.S. persons).

(*3*) Any other information the withholding agent reasonably requests in order to fulfill its obligations under chapter 4.

(B) The information on the FFI owner reporting statement may contain names of equity and debt holders that are prepopulated by the withholding agent based on prior information provided to the withholding agent by the payee if the prepopulated form instructs the payee to amend the statement if the contents are inaccurate, incomplete, or have changed, and the payee confirms in writing that the FFI owner reporting statement submitted to the withholding agent is accurate and complete.

(C) The FFI owner reporting statement may be submitted in any form that meets the requirements of this paragraph, including a form used for purposes of AML due diligence.

(v) *Exception for preexisting obligations (transitional).* A withholding agent may treat a payment made prior to January 1, 2017, with respect to a preexisting obligation as made to an owner-documented FFI if the withholding agent has collected, for purposes of satisfying its AML due diligence, documentation with respect to each individual and specified U.S. person that owns a direct or indirect interest in the payee, other than an interest as a creditor, within four years of the date of payment, that documentation is sufficient to satisfy the AML due diligence requirements of the jurisdiction in which the withholding agent maintains the account, the withholding agent has sufficient information to report all specified U.S. persons that own an interest in the payee, and the withholding agent does not know, or have reason to know, that any nonparticipating FFI owns an equity interest in the FFI or that any nonparticipating FFI or specified U.S. person owns a debt interest in the FFI constituting a financial account in excess of $50,000.

(vi) *Exception for offshore obligations.* A withholding agent that is making a payment, other than a payment of U.S. source FDAP income, with respect to an offshore obligation may, in lieu of obtaining a withholding certificate as otherwise required under paragraph (d)(6)(i)(A) of this section, rely upon a written statement that indicates the payee meets the requirements to qualify as an owner-documented FFI under § 1.1471–5(f)(3) and is not acting as an intermediary, if the withholding agent provides a written notice to the payee indicating that the payee is required to update the written statement and all associated documentation (such as the FFI owner reporting statement and underlying documentation) within 30 days of a change in circumstances.

(vii) *Exception for certain offshore obligations of $1,000,000 or less*—(A) A withholding agent may treat the payment as being made to an owner-documented FFI if—

(*1*) [Reserved] For further guidance, see § 1.1471–3T(d)(6)(vii)(A)(*1*).

(*2*) The withholding agent has collected documentation or a certification as to the payee's owners (either for purposes of complying with its AML due diligence or for purposes of satisfying the requirements of this paragraph (d)(6)(vii)) sufficient to identify every individual and specified U.S. person that owns any direct or indirect interest in the payee (other than an interest as a creditor) and determine the chapter 4 status of such person;

(*3*) The documentation described in paragraph (d)(6)(vii)(A)(*2*) of this section is sufficient to satisfy the AML due diligence requirements of the jurisdiction in which the withholding agent maintains the account (and such jurisdiction is a FATF-compliant jurisdiction);

(*4*) The withholding agent has sufficient information to report all specified U.S. persons that own an interest in the payee in accordance with § 1.1474–1(d); and

(*5*) The withholding agent does not know, or have reason to know, that the payee has any contingent beneficiaries or designated classes with unidentified beneficiaries or owners, that any nonparticipating FFI owns a direct or indirect equity interest in the payee, or

that any specified U.S. persons or nonparticipating FFIs own a debt interest constituting a financial account in excess of $50,000 in the payee (other than specified U.S. persons that the withholding agent has sufficient information to report).

(B) For example, a withholding agent that is required to obtain a certification from the payee identifying all persons owning an interest in the payee as part of its AML due diligence will not be required to obtain an FFI owner reporting statement, provided the other conditions of this paragraph (d)(6)(vii) are met. On the other hand, a withholding agent that has only obtained documentation for persons owning a certain threshold percentage of the payee will be required to obtain additional documentation to satisfy the requirements of this paragraph (d)(6)(vii). A withholding agent that treats a payee as an owner-documented FFI pursuant to this paragraph (d)(6)(vii) will not be required to obtain new documentation, including the FFI owner reporting statement, until there is a change in circumstances or until the account balance or value exceeds $1,000,000 on the last day of the calendar year.

(7) *Nonreporting IGA FFIs*—(i) *In general.* A withholding agent may treat a payee as a nonreporting IGA FFI if it has a withholding certificate identifying the payee, or the relevant branch of the payee, as a nonreporting IGA FFI.

(ii) *Exception for offshore obligations.* A withholding agent that makes a payment with respect to an offshore obligation may treat a payee as a nonreporting IGA FFI if it can reliably associate the payment with a written statement identifying the payee (or the relevant branch of the payee) as a nonreporting IGA FFI and, with respect to a payment of U.S. source FDAP income, the written statement indicates that the payee is the beneficial owner of the income and is accompanied by documentary evidence supporting a claim of foreign status (as described in paragraph (c)(5)(i) of this section). A withholding agent that makes a payment with respect to an offshore obligation may also treat a payee as a nonreporting IGA FFI if the withholding agent has a permanent residence address for the payee, or an address of the relevant branch of the payee, and has obtained a notification, either orally or in writing, indicating that the payee is not acting as an intermediary and general documentary evidence (as described in paragraph (c)(5)(ii)(A) of this section) that provides the withholding agent with sufficient information to reasonably determine that the payee is an entity listed as a nonreporting IGA FFI pursuant to a Model 1 or Model 2 IGA.

(8) *Identification of nonparticipating FFIs*—(i) *In general.* A withholding agent is required to treat a payee as a nonparticipating FFI if the withholding agent can reliably associate the payment with a withholding certificate identifying the payee as a nonparticipating FFI, the withholding agent knows or has reason to know that the payee is a nonparticipating FFI, or the withholding agent is required to treat the payee as a nonparticipating FFI under the presumption rules described in paragraph (f) of this section.

(ii) *Special documentation rules for payments made to an exempt beneficial owner through a nonparticipating FFI.* A withholding agent may treat a payment made to a nonparticipating FFI as beneficially owned by an exempt beneficial owner if the withholding agent can reliably associate the payment with—

(A) A withholding certificate that identifies the payee as a nonparticipating FFI that is either acting as an intermediary or is a flow-through entity; and

(B) An exempt beneficial owner withholding statement that meets the requirements of paragraphs (c)(3)(iii)(B)(*1*) and (*4*) of this section and contains the associated documentation necessary to establish the chapter 4 status of the exempt beneficial owner in accordance with paragraph (d)(9) of this section as if the exempt beneficial owner were the payee.

(9) *Identification of exempt beneficial owners*—(i) *Identification of foreign governments, governments of U.S. territories, international organizations, and foreign central banks of issue*—(A) *In general.* A withholding agent may treat a payee

as a foreign government, government of a U.S. territory, international organization, or foreign central bank of issue if it has a withholding certificate that identifies the payee as such an entity, indicates that the payee is the beneficial owner of the payment, and indicates that the payee is not engaged in commercial financial activities with respect to the payments or accounts identified on the form. A withholding agent may treat a payee as an international organization without requiring a withholding certificate if the name of the payee is one that is designated as an international organization by executive order (pursuant to 22 U.S.C. 288 through 288f) and other facts surrounding the transaction reasonably indicate that the international organization is not receiving the payment as an intermediary on behalf of another person. A withholding agent may treat a payee as an exempt beneficial owner pursuant to a Model 1 IGA or Model 2 IGA if it has a withholding certificate that identifies the payee as such an entity and indicates that the payee is the beneficial owner of the payment.

(B) *Exception for offshore obligations.* A withholding agent that makes a payment, other than a payment of U.S. source FDAP income, with respect to an offshore obligation may treat a payee as a foreign government, government of a U.S. territory, international organization, or foreign central bank of issue if the payee provides a written statement that it is such an entity and the written statement indicates that the payee receives the payment as a beneficial owner (within the meaning provided in §1.1471–6). A written statement provided by a foreign central bank of issue must also state that the foreign central bank of issue does not receive the payment in connection with a commercial activity as provided in §1.1471–6(h).

(C) *Exception for preexisting offshore obligations.* A withholding agent that makes a payment, other than a payment of U.S. source FDAP income, with respect to an offshore obligation that is also a preexisting obligation may treat the payee as a foreign government, government of a U.S. territory, international organization, or foreign central bank of issue if—

(*1*) The payee is generally known to the withholding agent to be, the payee's name and the facts surrounding the payment reasonably indicate, or the withholding agent has preexisting account documentary evidence (as described in paragraph (c)(5)(ii)(B) of this section) that reasonably indicates that the payee is a foreign government or government of a U.S territory, a political subdivision of a foreign government or government of a U.S. territory, any wholly owned agency or instrumentality of any one or more of the foregoing, an international organization, a foreign central bank of issue, or the Bank for International Settlements; and

(*2*) The withholding agent does not know that the payee is not the beneficial owner, within the meaning of §1.1471–6(b) through (e) (disregarding any presumption that a financial institution is assumed to be an intermediary absent documentation indicating otherwise) or a foreign central bank of issue receiving the payment in connection with a commercial activity.

(ii) *Identification of retirement funds*—(A) *In general.* A withholding agent may treat a payee as a retirement fund described in §1.1471–6(f) if it has a withholding certificate in which the payee certifies that it is a retirement fund meeting the requirements of §1.1471–6(f).

(B) *Exception for offshore obligations.* A withholding agent that makes a payment with respect to an offshore obligation may treat the payment as being made to a retirement fund described in §1.1471–6(f) if it obtains a written statement in which the payee certifies that it is a retirement fund under the laws of its local jurisdiction meeting the requirements of §1.1471–6(f) and, with respect to a payment of U.S. source FDAP income, documentary evidence supporting a claim of foreign status (as described in paragraph (c)(5)(i) of this section). A withholding agent that makes a payment with respect to an offshore obligation may also treat the payment as made to a retirement fund if it obtains general documentary evidence (as described in paragraph

(c)(5)(ii)(A) of this section) that provides the withholding agent with sufficient information to establish that the payee is a retirement fund meeting the requirements of § 1.1471–6(f).

(C) *Exception for preexisting offshore obligations.* A withholding agent that makes a payment with respect to an offshore obligation that is also a preexisting obligation, may treat the payee as a retirement fund described in § 1.1471–6(f) if the withholding agent has general documentary evidence or preexisting account documentary evidence (as described in paragraphs (c)(5)(ii)(A) or (B)) that establishes that the payee is a foreign entity that qualifies as a retirement fund in the country in which the payee is organized.

(iii) *Identification of entities wholly owned by exempt beneficial owners.* A withholding agent may treat a payee as an entity described in § 1.1471–6(g) (referring to certain entities wholly owned by exempt beneficial owners) if the withholding agent has—

(A) A withholding certificate or, for a payment made with respect to an offshore obligation, a written statement that identifies the payee as an investment entity that is the beneficial owner of the payment;

(B) An owner reporting statement that contains the name, address, TIN (if any), chapter 4 status (identifying the type of exempt beneficial owner), and a description of the type of documentation (Form W–8 or other documentary evidence) provided to the withholding agent for every person that owns a direct equity interest, or a debt interest constituting a financial account, in the payee, and that is subject to the general rules applicable to all withholding statements described in paragraph (c)(3)(iii)(B)(*1*) of this section; and

(C) Documentation for every person identified on the owner reporting statement establishing, pursuant to the documentation requirements described in this paragraph (d)(9), that such person is an exempt beneficial owner (without regard to whether the person is a beneficial owner of the payment).

(10) *Identification of territory financial institutions*—(i) *Identification of territory financial institutions that are beneficial owners*—(A) *In general.* A withholding agent may treat a payee as a territory financial institution if the withholding agent has a withholding certificate identifying the payee as a territory financial institution that beneficially owns the payment. See paragraph (d)(11)(viii) of this section for rules for documenting territory NFFEs.

(B) *Exception for preexisting offshore obligations.* A withholding agent that makes a payment with respect to an offshore obligation that is also a preexisting obligation may treat the payee as a territory financial institution if the withholding agent receives written notification, whether signed or not, that the payee is the beneficial owner of the payment and the withholding agent has general documentary evidence (as described in paragraph (c)(5)(ii)(A) of this section) or preexisting account documentary evidence (as described in paragraph (c)(5)(ii)(B) of this section) establishing that the payee was organized or incorporated under the laws of any U.S. territory and is a depository institution, custodial institution, or specified insurance company.

(ii) *Identification of territory financial institutions acting as intermediaries or that are flow-through entities.* A withholding agent may treat a payment as being made to a territory financial institution that is acting as an intermediary or that is a flow-through entity if the withholding agent has an intermediary withholding certificate or flow-through withholding certificate as described in paragraph (c)(3)(iii) of this section that identifies the person who receives the payment as a territory financial institution. A withholding agent that obtains the documentation described in the preceding sentence may treat the territory financial institution as the payee if the withholding certificate contains a certification that the territory financial institution agrees to be treated as a U.S. person with respect to the payment. If the withholding certificate does not contain such a certification, then the withholding agent must treat the person on whose behalf the territory financial institution receives the payment as the payee. See paragraph (c)(3)(iii) of this section for additional documentation that must accompany

the withholding certificate of the territory financial institution in this case.

(iii) *Reason to know.* In addition to the general standards of knowledge described in paragraph (e) of this section, a withholding agent will have reason to know that an entity is not a territory financial institution if the withholding agent has: a current residence or mailing address, either in the entity's account files or on documentation provided by the payee, for the entity that is outside the U.S. territory in which the entity claims to be organized; a current telephone number for the payee that has a country code other than the country code for the U.S. territory or has an area code other than the area code(s) of the applicable U.S. territory and no telephone number for the payee in the applicable U.S. territory; or standing instructions for the withholding agent to pay amounts from its account to an address or account outside the applicable U.S. territory. A withholding agent that has knowledge of a current address, current telephone number, or standing payment instructions for the entity outside of the applicable U.S. territory, may nevertheless treat the entity as a territory financial institution if it obtains documentary evidence that establishes that the entity was organized in the applicable U.S. territory.

(11) *Identification of excepted NFFEs*—(i) *Identification of excepted nonfinancial group entities*—(A) *In general.* A withholding agent may treat a payee as an excepted nonfinancial group entity described in §1.1471–5(e)(5)(i) if the withholding agent has a withholding certificate identifying the payee as such an entity.

(B) *Exception for offshore obligations.* A withholding agent that makes a payment with respect to an offshore obligation may treat a payee as an excepted nonfinancial group entity described in §1.1471–5(e)(5)(i) if the withholding agent obtains:

(*1*) A written statement in which the payee certifies that it is a foreign entity operating primarily as an excepted nonfinancial group entity for a group that primarily engages in a business other than a financial business described in §1.1471–5(e)(4) and, with respect to a payment of U.S. source FDAP income, documentary evidence supporting a claim of foreign status (as described in paragraph (c)(5)(i) of this section); or

(*2*) General documentary evidence (as described in paragraph (c)(5)(ii)(A) of this section) that provides the withholding agent with sufficient information to establish that the payee is an excepted nonfinancial group entity described in §1.1471–5(e)(5)(i).

(ii) *Identification of excepted nonfinancial start-up companies*—(A) *In general.* A withholding agent may treat a payee as an excepted nonfinancial start-up company described in §1.1471–5(e)(5)(ii) if the withholding agent has a withholding certificate that identifies the payee as a start-up company that intends to operate as other than a financial institution and the withholding certificate provides a formation date for the payee that is less than 24 months prior to the date of the payment.

(B) *Exception for offshore obligations.* A withholding agent that makes a payment with respect to an offshore obligation may treat a payee as an excepted nonfinancial start-up company described in §1.1471–5(e)(5)(ii) if it obtains—

(*1*) A written statement from the payee in which the payee certifies that it is a foreign entity formed for the purpose of operating a business other than that of a financial institution and provides the entity's formation date which was less than 24 months prior to the date of the payment and, with respect to a payment of U.S. source FDAP income, documentary evidence supporting a claim of foreign status (as described in paragraph (c)(5)(i) of this section); or

(*2*) General documentary evidence (as described in paragraph (c)(5)(ii)(A) of this section) that provides the withholding agent with sufficient information to establish that the payee is a foreign entity other than a financial institution and has a formation date which is less than 24 months prior to the date of the payment.

(C) *Exception for preexisting offshore obligations.* A withholding agent may treat a payment made with respect to an offshore obligation that is also a preexisting obligation as made to a

start-up company described in § 1.1471–5(e)(5)(ii) if the withholding agent has general documentary evidence (as described in paragraph (c)(5)(ii)(A) of this section) or preexisting account documentary evidence (as described in paragraph (c)(5)(ii)(B) of this section) that provides the withholding agent sufficient information to establish that the payee is, or intends to be, engaged in a business other than as a financial institution and establishes that the payee is a foreign entity that was organized less than 24 months prior to the date of the payment.

(iii) *Identification of excepted nonfinancial entities in liquidation or bankruptcy*—(A) *In general.* A withholding agent may treat a payee as an excepted nonfinancial entity in liquidation or bankruptcy, as described in § 1.1471–5(e)(5)(iii), if the withholding agent has a withholding certificate that identifies the payee as such an entity and the withholding agent has no knowledge that the payee has claimed to be such an entity for more than three years. A withholding agent may continue to treat a payee as an entity described in this paragraph for longer than three years if it obtains, in addition to a withholding certificate, documentary evidence such as a bankruptcy filing or other public document that supports the payee's claim that it remains in liquidation or bankruptcy.

(B) *Exception for offshore obligations.* A withholding agent that makes a payment with respect to an offshore obligation may treat the payee as an excepted nonfinancial entity in liquidation or bankruptcy, as described in § 1.1471–5(e)(5)(iii) if the withholding agent has general documentary evidence (as described in paragraph (c)(5)(ii)(A) of this section) or a copy of a bankruptcy filing, or similar documentation, establishing that the payee is a foreign entity in liquidation or bankruptcy and establishing that prior to the liquidation or bankruptcy filing, the payee was engaged in a business other than that of a financial institution. A withholding agent may also treat the payee with respect to an offshore obligation as an excepted nonfinancial entity in liquidation or bankruptcy, as described in § 1.1471–5(e)(5)(iii), if the withholding agent obtains a written statement stating that the payee is a foreign entity in the process of liquidating or reorganizing with the intent to continue or recommence its former business as a nonfinancial institution, the withholding agent has no knowledge that the payee has claimed to be such an entity for more than three years (unless the withholding agent has obtained additional documentary evidence to support the claim that the entity remains in bankruptcy or liquidation), and, with respect to a payment of U.S. source FDAP income, documentary evidence supporting a claim of foreign status (as described in paragraph (c)(5)(i) of this section).

(C) *Exception for preexisting offshore obligations.* A withholding agent that makes a payment with respect to an offshore obligation that is also a preexisting obligation may treat a payee as an excepted nonfinancial entity in liquidation or bankruptcy, as described in § 1.1471–5(e)(5)(iii), if the withholding agent has preexisting account documentary evidence (as described in paragraph (c)(5)(ii)(B) of this section) that unambiguously indicates that the payee is not a financial institution and is a foreign entity that entered liquidation or bankruptcy within the three years preceding the date of the payment.

(iv) *Identification of section 501(c) organizations*—(A) *In general.* A withholding agent may treat a payee as a 501(c) organization described in § 1.1471–5(e)(5)(v) if the withholding agent can reliably associate the payment with a withholding certificate that identifies the payee as a section 501(c) organization and the payee provides either a certification that the payee has been issued a determination letter by the IRS that is currently in effect concluding that the payee is a section 501(c) organization and providing the date of the letter, or a copy of an opinion from U.S. counsel certifying that the payee is a section 501(c) organization (without regard to whether the payee is a foreign private foundation).

(B) *Reason to know.* A withholding agent must cease to treat a foreign organization's claim that it is a section 501(c) organization as valid beginning on the earlier of the date on which

such agent knows that the IRS has given notice to such foreign organization that it is not a section 501(c) organization or 90 days after the date on which the IRS gives notice to the public that such foreign organization is not a section 501(c) organization. Further, a withholding agent will have reason to know that a payee is not a section 501(c) organization if it has determined, pursuant to its AML due diligence, that the payee has beneficial owners (as defined for purposes of the AML due diligence).

(v) *Identification of non-profit organizations*—(A) *In general.* A withholding agent may treat a payee as a non-profit organization described in §1.1471–5(e)(5)(vi) if the withholding agent has a withholding certificate that identifies the payee as a non-profit organization.

(B) *Exception for offshore obligations.* A withholding agent may treat a payment with respect to an offshore obligation as made to a nonprofit organization without obtaining a withholding certificate for the payee if the payee—

(*1*) Has provided a written statement indicating that the payee is a non-profit organization described in §1.1471–5(e)(5)(vi) and, with respect to a payment of U.S. source FDAP income, has provided documentary evidence supporting a claim of foreign status (as described in paragraph (c)(5)(i) of this section); or

(*2*) Is required to be reported by the withholding agent as a tax-exempt charitable organization under the information reporting laws of the country in which the account is maintained or is permitted an exemption from withholding due to its status as a tax exempt charitable organization under the laws of the country in which the account is maintained, and the withholding agent obtains general documentary evidence (as described in paragraph (c)(5)(ii)(A) of this section) establishing that the payee was organized for charitable purposes in the same country in which the account is maintained by the withholding agent for the purposes described in §1.1471–5(e)(5)(vi) and that the payee has no beneficial owners (as that term is used for purposes of that country's AML due diligence).

(C) *Exception for preexisting offshore obligations.* A withholding agent that makes a payment with respect to an offshore obligation that is also a preexisting obligation may treat the payee as a nonprofit organization described in §1.1471–5(e)(5)(vi) if the payee—

(*1*) Provides a letter of local counsel that certifies that the payee qualifies as a tax-exempt entity in its local jurisdiction; or

(*2*) Provides a letter issued by the tax authority of the country in which the payee is organized or a statement provided on the Web site of such tax authority indicating that the payee is a tax-exempt entity or charitable organization in the payee's country of organization.

(D) *Reason to know.* A withholding agent will have reason to know that a payee is not a nonprofit organization if it has determined, pursuant to its AML due diligence, that the payee has beneficial owners (as defined for purposes of the AML due diligence).

(vi) *Identification of NFFEs that are publicly traded corporations.* A withholding agent may treat a payee as an NFFE described in §1.1472–1(c)(1)(i) (applying to an entity the stock of which is regularly traded on an established securities market) if it has a withholding certificate that certifies that the payee is such an entity and provides the name of a securities exchange upon which the payee's stock is regularly traded.

(A) *Exception for offshore obligations.* A withholding agent that makes a payment with respect to an offshore obligation may treat a payee as an NFFE described in §1.1472–1(c)(1)(i) if the withholding agent obtains—

(*1*) A written statement that the payee is a foreign corporation that is not a financial institution, that its stock is regularly traded on an established securities market, the name of one of the exchanges upon which the payee's stock is traded, and, with respect to a payment of U.S. source FDAP income, documentary evidence supporting a claim of foreign status (as described in paragraph (c)(5)(i) of this section); or

(*2*) Any documentation establishing that the payee is listed on a public securities exchange or on a stock market index and general documentary evidence (as described in paragraph (c)(5)(ii)(A) of this section) establishing that the payee is a foreign corporation other than a financial institution.

(B) *Exception for preexisting offshore obligations.* A withholding agent that makes a payment with respect to an offshore obligation that is also a preexisting obligation may treat the payee as an entity described in §1.1472–1(c)(1)(i) if the withholding agent has any documentation confirming that the payee is listed on a public securities exchange or on a stock market index and preexisting account documentary evidence (as described in paragraph (c)(5)(ii)(B) of this section) establishing that the payee is a foreign corporation other than a financial institution.

(vii) *Identification of NFFE affiliates.* A withholding agent may treat a payee as an NFFE described in §1.1472–1(c)(1)(ii) (applying to an affiliate of an entity the stock of which is regularly traded on an established exchange) if it has a beneficial owner withholding certificate that identifies the payee as a foreign corporation that is an affiliate of an entity, described §1.1472–1(c)(1)(i), whose stock is regularly traded on an established exchange and provides the name of the entity that is regularly traded and one of the exchanges upon which the entity's stock is listed.

(A) *Exception for offshore obligations.* A withholding agent that makes a payment with respect to an offshore obligation may treat a payment as being made to an NFFE described in §1.1472–1(c)(1)(ii) if the withholding agent obtains—

(*1*) Documentary evidence or other information confirming that the payee is affiliated with an entity listed on a public securities exchange or on a stock market index and general documentary evidence (as described in paragraph (c)(5)(ii)(A) of this section) that indicates that the payee is a foreign corporation other than a financial institution; or

(*2*) A written statement that the payee is a foreign corporation that is not a financial institution, that the payee is an affiliate of another nonfinancial entity whose stock is regularly traded on an established securities exchange, providing the name of the payee's affiliate and one of the exchanges upon which the affiliate's stock is traded and, in the case of a payment of U.S. source FDAP income, documentary evidence supporting the payee's claim of foreign status (as described in paragraph (c)(5)(i) of this section).

(B) *Exception for preexisting offshore obligations.* A withholding agent that makes a payment with respect to an offshore obligation that is also a preexisting obligation may treat the payee as an NFFE described in §1.1472–1(c)(1)(ii) if the withholding agent has—

(*1*) Documentation or other information confirming that the payee is affiliated with a corporation that is listed on a public securities exchange or on a stock market index;

(*2*) Preexisting account documentary evidence (as described in paragraph (c)(5)(ii)(B) of this section) that unambiguously indicates that the payee is a corporation that is not a financial institution; and

(*3*) In the case of a payment of U.S. source FDAP income, documentary evidence supporting the payee's claim of foreign status (as described in paragraph (c)(5)(i) of this section).

(viii) *Identification of excepted territory NFFEs.* A withholding agent may treat a payee as an excepted territory NFFE described in §1.1472–1(c)(1)(iii) if it has a withholding certificate that identifies the payee as an NFFE that was organized in a U.S. territory and includes a certification for chapter 4 purposes that all of its owners are bona fide residents of that U.S. territory.

(A) [Reserved] For further guidance, see §1.1471–3T(d)(11)(viii)(A).

(*1*) Has a pre-FATCA Form W–8 identifying the payee as a foreign entity with a permanent residence address in a U.S. territory; and

(*2*) Has general documentary evidence (as described in paragraph (c)(5)(ii)(A) of this section), preexisting account documentary evidence (as described in paragraph (c)(5)(ii)(B) of this section), or a prospectus establishing that the

payee is an entity other than a depository institution, custodial institution, or specified insurance company; and

(*3*) Is subject, with respect to such obligation, to the laws of a FATF-compliant jurisdiction and as part of its AML due diligence has not identified any owners of the payee that are not bona fide residents of the U.S. territory in which the payee is organized.

(B) *Exception for offshore obligations.* A withholding agent that makes a payment with respect to an offshore obligation may treat a payment as being made to an excepted territory NFFE described in §1.1472–1(c)(1)(iii) if it has—

(*1*) A written statement providing that the payee is an entity other than a depository institution, custodial institution, or specified insurance company, was organized in a U.S. territory, and is wholly owned by one or more bona fide residents of that U.S. territory, and, with respect to a payment of U.S. source FDAP income, the written statement must indicate that the payee is the beneficial owner of the income and be accompanied by documentary evidence supporting a claim of foreign status (as described in paragraph (c)(5)(i) of this section); or

(*2*) General documentary evidence (as described in paragraph (c)(5)(ii)(A) of this section) or a prospectus establishing that the payee is an entity other than a depository institution, custodial institution, or specified insurance company, establishing that the payee was organized in a U.S. territory, and establishing that the payee is wholly owned by one or more bona fide residents of that U.S. territory.

(C) [Reserved] For further guidance, see §1.1471–3T(d)(11)(viii)(C).

(ix) *Identification of active NFFEs.* A withholding agent may treat a payee as an active NFFE described in §1.1472–1(c)(1)(iv) if it has a withholding certificate identifying the payee as an active NFFE.

(A) *Exception for offshore obligations.* A withholding agent that makes a payment with respect to an offshore obligation may treat the payee as an active NFFE if the withholding agent has—

(*1*) General documentary evidence (as described in paragraph (c)(5)(ii)(A) of this section) providing sufficient information to determine that the payee is a foreign entity engaged in an active trade or business other than that of a financial institution; or

(*2*) A written statement stating that the payee is a foreign entity engaged in an active business other than that of a financial institution and, in the case of a payment of U.S. source FDAP income, documentary evidence supporting the payee's claim of foreign status (as described in paragraph (c)(5)(i) of this section).

(B) *Exception for preexisting offshore obligations.* A withholding agent that makes a payment with respect to an offshore obligation that is also a preexisting obligation may treat the payee as an active NFFE if the withholding agent has preexisting account documentary evidence (as described in paragraph (c)(5)(ii)(B) of this section) that unambiguously indicates that the payee is a foreign entity engaged in a trade or business other than that of a financial institution and, in the case of a payment of U.S. source FDAP income, documentary evidence supporting the payee's claim of foreign status (as described in paragraph (c)(5)(i) of this section).

(C) *Limit on reason to know.* A withholding agent relying on documentary evidence to determine that a payee is an active NFFE will not be required to determine that the payee meets the income and asset thresholds but rather must determine only that the payee is primarily engaged in a business other than that of a financial institution.

(x) [Reserved] For further guidance, see §1.1471–3T(d)(11)(x).

(xi) [Reserved] For further guidance, see §1.1471–3T(d)(11)(xi).

(xii) [Reserved] For further guidance, see §1.1471–3T(d)(11)(xii) through (d)(11)(xii)(C).

(12) *Identification of passive NFFEs.* A withholding agent may treat a payment as having been made to a passive NFFE if it has a withholding certificate that identifies the payee as a passive NFFE.

(i) *Exception for offshore obligations.* A withholding agent that makes a payment with respect to an offshore obligation may treat the payment as made

to a passive NFFE if the withholding agent has—

(A) General documentary evidence (as described in paragraph (c)(5)(ii)(A) of this section) for the payee providing sufficient information to determine that the payee is a foreign entity that is not a financial institution; or

(B) A written statement that the payee is a foreign entity that is not a financial institution and, for a payment of U.S. source FDAP income, documentary evidence supporting the payee's claim of foreign status (as described in paragraph (c)(5)(i) of this section).

(ii) *Special rule for preexisting offshore obligations.* A withholding agent that makes a payment with respect to an offshore obligation that is also a preexisting obligation may treat the payee as a passive NFFE if the withholding agent has preexisting account documentary evidence (as described in paragraph (c)(5)(ii)(B) of this section) providing sufficient information to determine that the payee is a foreign entity that is not a financial institution and, with respect to a payment of U.S. source FDAP income, documentary evidence supporting the payee's claim of foreign status (as described in paragraph (c)(5)(i) of this section).

(iii) *Required owner certification for passive NFFEs*—(A) [Reserved] For further guidance, see §1.1471–3T(d)(12)(iii)(A).

(B) [Reserved] For further guidance, see §1.1471–3T(d)(12)(iii)(B).

(e) *Standards of knowledge*—(1) *In general.* The standards of knowledge discussed in this section apply for purposes of determining the chapter 4 status of payees, beneficial owners, intermediaries, flow-through entities, and persons that own an interest in an owner-documented FFI. A withholding agent shall be liable for tax, interest, and penalties to the extent provided under section 1474 and the regulations under that section if it fails to withhold the correct amount despite knowing or having reason to know the amount required to be withheld. A withholding agent that cannot reliably associate the payment with documentation and fails to act in accordance with the presumption rules set forth in paragraph (f) of this section may also be liable for tax, interest, and penalties. See paragraph (e)(4) in this section for the specific standards of knowledge applicable to a person's specific claims of chapter 4 status.

(2) [Reserved] For further guidance, see §1.1471–3T(e)(2).

(3) [Reserved] For further guidance, see §1.1471–3T(e)(3).

(i) [Reserved] For further guidance, see §1.1471–3T(e)(3)(i).

(ii) [Reserved] For further guidance, see §1.1471–3T(e)(3)(ii).

(iii) [Reserved] For further guidance, see §1.1471–3T(e)(3)(iii).

(iv) [Reserved] For further guidance, see §1.1471–3T(e)(3)(iv).

(4) [Reserved] For further guidance, see §1.1471–3T(e)(4).

(i) [Reserved] For further guidance, see §1.1471–3T(e)(4)(i).

(ii) [Reserved] For further guidance, see §1.1471–3T(e)(4)(ii) through (e)(4)(ii)(B.

(A) [Reserved] For further guidance, see §1.1471–3T(e)(4)(ii)(A).

(B) [Reserved] For further guidance, see §1.1471–3T(e)(4)(ii)(B).

(iii) [Reserved] For further guidance, see §1.1471–3T(e)(4)(iii).

(iv) [Reserved] For further guidance, see §1.1471–3T(e)(4)(iv through (e)(4)(iv)(B)(*2*).

(v) [Reserved] For further guidance, see §1.1471–3T(e)(4)(v).

(A) *U.S. indicia for entities.* The term *U.S. indicia* when used with respect to an entity includes, for purposes of this paragraph (e)(4)(v) any of the following—

(*1*) Classification of an account holder as a U.S. resident in the withholding agent's customer files;

(*2*) A current U.S. residence address or U.S. mailing address;

(*3*) With respect to an offshore obligation, standing instructions to pay amounts to a U.S. address or an account maintained in the United States;

(*4*) A current telephone number for the entity in the United States but no telephone number for the entity outside of the United States;

(*5*) A current telephone number for the entity in the United States in addition to a telephone number for the entity outside of the United States;

(*6*) A power of attorney or signatory authority granted to a person with a U.S. address; and

(*7*) An ''in-care-of'' address or ''hold mail'' address that is the sole address provided for the entity.

(B) *Documentation required to cure U.S. indicia.* A withholding agent may rely upon a code or classification described in paragraph (c)(5)(ii)(B) of this section to treat an entity as having a foreign chapter 4 status if there are U.S. indicia associated with the entity and the withholding agent obtains the relevant documentation described in this paragraph (e)(4)(v)(B).

(*1*) [Reserved] For further guidance, see § 1.1471–3T(e)(4)(v)(B)(*1*).

(*2*) [Reserved] For further guidance, see § 1.1471–3T(e)(4)(v)(B)(*2*).

(*3*) If there are indicia described in paragraphs (e)(4)(v)(A)(*5*) through (*7*) of this section associated with the entity, the withholding agent may treat the entity as a foreign person if the withholding agent obtains a withholding certificate or one form of documentary evidence, described in paragraph (c)(5) of this section, that establishes the entity's status as a foreign person (such as a certificate of incorporation).

(vi) *Specific standards of knowledge applicable to documentation received from intermediaries and flow-through entities*—(A) *In general.* A withholding agent that receives documentation from a payee through an intermediary or flow-through entity is required to review all documentation obtained with respect to the payee and all intermediaries and/or flow-through entities in the chain of payment, applying the standards of knowledge set forth in paragraph (e) of this section. This standard requires, but is not limited to, a withholding agent's compliance with the rules of paragraphs (e)(4)(vi)(A)(*1*) and (*2*) of this section.

(*1*) The withholding agent is required to review the withholding statement or owner reporting statement provided and may not rely on information in the statement to the extent the information does not support the claims made regarding the chapter 4 status of the person. For this purpose, a withholding agent may not treat a person as a foreign person if an address in the United States is provided for such person unless the withholding statement is accompanied by a valid withholding certificate and documentary evidence establishing foreign status (as described in paragraph (c)(5)(i) of this section).

(*2*) The withholding agent must review each withholding certificate and written statement in accordance with paragraph (e)(4)(i) through (iii) of this section and all documentary evidence in accordance with paragraph (e)(4)(i) and (iv) of this section, and must verify that the information contained on the withholding certificate, written statement, and documentary evidence is consistent with the information on the withholding statement or owner reporting statement. If there is a discrepancy between the withholding certificate, written statement, or documentary evidence and the withholding statement or owner reporting statement, the withholding agent may choose to rely on the withholding certificate, written statement, or documentary evidence provided such documentation is valid and the intermediary or flow-through entity does not indicate that the documentation is unreliable or inaccurate, or may apply the presumption rules set forth in paragraph (f) of this section. If the withholding agent chooses to rely upon the withholding certificate, written statement, or documentary evidence, the withholding agent is required to instruct the intermediary or flow-through entity to correct the withholding statement and confirm that the intermediary or flow-through entity does not know or have reason to know that the documentation is unreliable or inaccurate.

(B) [Reserved] For further guidance, see § 1.1471–3T(e)(4)(vi)(B).

(vii) *Limits on reason to know*—(A) *Scope of review for preexisting obligations of entities.* For purposes of determining whether a withholding agent that makes a payment with respect to a preexisting obligation to an entity has reason to know that the chapter 4 status applied to the entity is unreliable or incorrect, the withholding agent is only required to review information contradicting the chapter 4 status claimed if such information is contained in the current customer master

file, the most recent withholding certificate, written statement, and documentary evidence for the person, the most recent account opening contract, the most recent documentation obtained by the withholding agent for purposes of AML due diligence or for other regulatory purposes, any power of attorney or signature authority forms currently in effect, and any standing instructions to pay amounts that is currently in effect.

(B) [Reserved] For further guidance, see §1.1471–3T(e)(4)(vii)(B).

(C) *Reason to know there are U.S. indicia associated with preexisting offshore obligations.* For payments made outside of the United States with respect to an offshore obligation that is also a preexisting obligation and with respect to a withholding agent that had not already documented the payee for purposes of chapter 3 or 61, the withholding agent, in lieu of searching the account files addressed in paragraph (e)(4)(vii)(A) of this section to determine whether there are U.S. indicia associated with the payee (or other person who receives the payment), may instead rely upon a search of its electronically searchable information associated with such person. A withholding agent that relies upon an electronic search pursuant to this paragraph (e)(4)(vii)(C) must also review for U.S. indicia any documentation upon which the withholding agent relies to determine the chapter 4 status of the person and any documentation that the withholding agent had been relying upon to determine the residency or citizenship of the person.

(D) *Limits on reason to know for multiple obligations belonging to a single person.* A withholding agent that maintains multiple obligations for a single person will have reason to know that a chapter 4 status assigned to the person is inaccurate based on information contained in the customer files for another obligation held by the person only to the extent that—

(*1*) The withholding agent's computerized systems link the obligations by reference to a data element such as client number, EIN, or foreign tax identifying number and consolidates the customer information and payment information for the obligations; or

(*2*) The withholding agent has treated the obligations as consolidated obligations for purposes of sharing documentation pursuant to paragraph (c)(8) of this section or for purposes of treating one or more accounts as preexisting obligations.

(viii) *Reasonable explanation supporting claim of foreign status.* A reasonable explanation supporting a claim of foreign status for an individual means a written statement prepared by the individual (or the individual's completion of a checklist provided by the withholding agent), stating that the individual meets one of the requirements of paragraphs (e)(4)(viii)(A) through (D).

(A) The individual certifies that he or she—

(*1*) Is a student at a U.S. educational institution and holds the appropriate visa;

(*2*) Is a teacher, trainee, or intern at a U.S. educational institution or a participant in an educational or cultural exchange visitor program, and holds the appropriate visa;

(*3*) Is a foreign individual assigned to a diplomatic post or a position in a consulate, embassy, or international organization in the United States; or

(*4*) [Reserved] For further guidance, see §1.1471–3T(e)(4)(viii)(A)(*4*).

(B) The individual provides information demonstrating that he or she has not met the substantial presence test set forth in §301.7701(b)–1(c) of this chapter (for example, a written statement indicating the number of days present in the United States during the 3-year period that includes the current year);

(C) The individual certifies that he or she meets the closer connection exception described in §301.7701(b)–2, states the country to which the individual has a closer connection, and demonstrates how that closer connection has been established; or

(D) With respect a payment entitled to a reduced rate of tax under a U.S. income tax treaty, the individual certifies that he or she is treated as a resident of a country other than the United States and is not treated as a U.S. resident or U.S. citizen for purposes of that income tax treaty.

(5) *Conduit financing arrangements.* The rules set forth in § 1.1441–7(f), regarding a withholding agent's liability for failing to withhold in the case in which the financing arrangement is a conduit financing arrangement, apply for purposes determining a withholding agent's liability for any withholding required under chapter 4.

(6) *Additional guidance.* The IRS may prescribe other circumstances for which a withholding certificate or documentary evidence to establish a payee's chapter 4 status is unreliable or incorrect in addition to the circumstances described in this paragraph (e).

(f) *Presumptions regarding chapter 4 status of the person receiving the payment in the absence of documentation*—(1) [Reserved] For further guidance, see § 1.1471–3T(f)(1).

(2) [Reserved] For further guidance, see § 1.1471–3T(f)(2).

(3) [Reserved] For further guidance, see § 1.1471–3T(f)(3).

(4) [Reserved] For further guidance, see § 1.1471–3T(f)(4).

(5) [Reserved] For further guidance, see § 1.1471–3T(f)(5).

(6) [Reserved] For further guidance, see § 1.1471–3T(f)(6).

(7) [Reserved] For further guidance, see § 1.1471–3T(f)(7) through (f)(7)(ii).

(i) [Reserved] For further guidance, see § 1.1471–3T(f)(7)(i).

(ii) [Reserved] For further guidance, see § 1.1471–3T(f)(7)(ii).

(8) [Reserved] For further guidance, see § 1.1471–3T(f)(8).

(9) [Reserved] For further guidance, see § 1.1471–3T(f)(9) through (f)(9)(ii).

(g) *Effective/applicability date.* This section generally applies on January 28, 2013. For other dates of applicability, see §§ 1.1471–3(d)(1); 1.1471–3(d)(4)(i), (ii), and (iv); 1.1471–3(d)(6)(v); 1.1471–3(d)(11)(viii)(A); 1.1471–3(d)(12)(iii)(B); 1.1471–3(e)(3)(ii); and 1.1471–3(e)(4)(vii)(B).

[T.D. 9610, 78 FR 5916, Jan. 28, 2013; 78 FR 55204, Sept. 10, 2013, as amended by T.D. 9657, 79 FR 12830, Mar. 6, 2014]

§ 1.1471–3T Identification of payee (temporary).

(a) [Reserved] For further guidance, see § 1.1471–3(a).

(1) through (2) [Reserved] For further guidance, see § 1.1471–3(a)(1) through (2).

(3) [Reserved] For further guidance, see § 1.1471–3(a)(3).

(i) through (ii)(B) [Reserved] For further guidance, see § 1.1471–3(a)(3)(i) through (a)(3)(ii)(B).

(iii) *U.S. intermediary or agent of a foreign person.* A withholding agent that makes a withholdable payment to a U.S. person and has actual knowledge that the person receiving the payment is acting as an intermediary or agent of a foreign person with respect to the payment must treat such foreign person, and not the intermediary or agent, as the payee of such payment. Notwithstanding the previous sentence, a withholding agent that makes a withholdable payment to a U.S. financial institution or a U.S. insurance broker (to the extent such withholdable payment is a payment of premiums) that is acting as an intermediary or agent with respect to the payment on behalf of one or more foreign persons may treat the U.S. financial institution or U.S. insurance broker as the payee if the withholding agent does not have reason to know that the U.S. financial institution or U.S. insurance broker will not comply with its obligations to withhold under sections 1471 and 1472.

(iv) [Reserved] For further guidance, see § 1.1471–3(a)(3)(iv).

(v) *Disregarded entity or limited branch.* Except as otherwise provided in paragraph (a)(3)(v) through (vii) of this section, a withholding agent that makes a withholdable payment to an entity that is disregarded for U.S. federal tax purposes under § 301.7701–2(c)(2)(i) as an entity separate from its single owner must treat the single owner as the payee. The rules under § 1.1471–3(d)(4) and (e)(3) apply to determine the circumstances under which a withholding agent may treat a payment made to a disregarded entity owned by an FFI as made to a payee that is a participating FFI or registered deemed-compliant FFI, and not as a payment made to a payee that is a nonparticipating FFI. A withholding agent that makes a payment to a limited branch (including an entity disregarded as a separate entity from its owner if such owner is an FFI and the

disregarded entity is unable to comply with the terms of an FFI agreement with respect to accounts that it maintains) will be required to treat the payment as being made to a nonparticipating FFI.

(vi) *U.S. branch of certain foreign banks or foreign insurance companies.* A withholdable payment to a U.S. branch of either a participating FFI, registered deemed-compliant FFI, or NFFE is a payment to a U.S. person if the U.S. branch is treated as a U.S. person under §1.1441–1(b)(2)(iv)(A). In such case, the U.S. branch is treated as the payee. A U.S. branch treated as a U.S. person (as defined in §1.1471–1(b)(135)), however, is not treated as a U.S. person for purposes of the withholding certificate it may provide to a withholding agent for purposes of chapter 4. Accordingly, a U.S. branch treated as a U.S. person must furnish a withholding certificate on a Form W–8 to certify its chapter 4 status (and not a Form W–9, ''Request for Taxpayer Identification Number and Certification''). See also paragraph (f)(6) of this section for the rules under which a withholding agent can presume a payment constitutes income that is effectively connected with a U.S. trade or business. A U.S. branch treated as a U.S. person may not make an election to be withheld upon, as described in section 1471(b)(3) and §1.1471–2(a)(2)(iii), for purposes of chapter 4. See §1.1471–4(c)(2)(v) for the rule requiring a U.S. branch that has elected to be treated as a U.S. person to apply the due diligence rules applicable to a U.S. withholding agent in lieu of those otherwise applicable to a participating FFI. See also §1.1474–1(i)(1) and (2) for the requirement of a U.S. branch to report information regarding certain U.S. owners of owner documented FFIs and passive NFFEs. See §1.1471–4(d) for rules for when a U.S. branch reports as a U.S. person.

(vii) [Reserved] For further guidance, see §1.1471–3(a)(3)(vii).

(b) [Reserved] For further guidance, see §1.1471–3(b).

(1) through (2) [Reserved] For further guidance, see §1.1471–3(b)(1) through (2).

(3) *Determination of whether the payment is made to a QI, WP, or WT.* A withholding agent may treat the person who receives a payment as a QI, WP, or WT if the withholding agent can reliably associate the payment with a valid Form W–8IMY, as described in paragraph (c)(3)(iii) of this section, that indicates that the person who receives the payment is a QI, WP, or WT, provides the person's QI–EIN, WP–EIN, or WT–EIN, and the person's GIIN, if applicable.

(4) [Reserved] For further guidance, see §1.1471–3(b)(4).

(c) [Reserved] For further guidance, see §1.1471–3(c).

(1) through (2)(ii) [Reserved] For further guidance, see §1.1471–3(c)(1) through (c)(2)(ii).

(3) [Reserved] For further guidance, see §1.1471–3(c)(3).

(i) [Reserved] For further guidance, see §1.1471–3(c)(3)(i).

(ii) [Reserved] For further guidance, see §1.1471–3(c)(3)(ii).

(A) through (B) [Reserved] For further guidance, see §1.1471–3(c)(3)(ii)(A) through (B).

(C) The person's entity classification for U.S. tax purposes;

(D) The person's chapter 4 status; and

(E) [Reserved] For further guidance, see §1.1471–3(c)(3)(ii)(E).

(iii) [Reserved] For further guidance, see §1.1471–3(c)(3)(iii).

(A) *In general.* A withholding certificate of an intermediary, flow-through entity, or U.S. branch of such entity (whether or not such branch is treated as a U.S. person) is valid for purposes of chapter 4 only if it is furnished on a Form W–8IMY, an acceptable substitute form, or such other form as the IRS may prescribe, it is signed under penalties of perjury by a person with authority to sign for the person named on the form, its validity period has not expired, and it contains the following information, statements, and certifications—

(*1*) through (*4*) [Reserved] For further guidance, see §1.1471–3(c)(3)(iii)(A)(*1*) through (*4*).

(*5*) A GIIN, in the case of a participating FFI or a registered deemed-compliant FFI (including a U.S. branch of such an entity, whether or not such branch is treated as a U.S. person, and including a QI, WP, or WT that is a participating FFI or registered deemed-compliant FFI), and an EIN in

the case of a QI, WP, or WT. Additionally, if a branch (other than a U.S. branch) of a participating FFI or registered deemed-compliant FFI outside of its country of residence acts as an intermediary, a GIIN of such branch must be provided on the withholding certificate. In the case of a U.S. branch, the GIIN provided must be the GIIN assigned to the participating FFI or registered deemed-compliant FFI.

(*6*) through (*12*) [Reserved] For further guidance, see §1.1471–3(c)(3)(iii)(A)(*6*) through (*12*).

(B) [Reserved] For further guidance, see §1.1471–3(c)(3)(iii)(B).

(*1*) *In general*. A withholding statement forms an integral part of the withholding certificate and the penalties of perjury statement provided on the withholding certificate applies to the withholding statement as well. The withholding statement may be provided in any manner, and in any form, to which the person submitting the form and the withholding agent mutually agree, including electronically. A withholding statement may be provided electronically only if it meets the requirements of §1.1441–1(e)(3)(iv)(B). The withholding statement must be updated as often as necessary for the withholding agent to meet its reporting and withholding obligations under chapter 4. A withholding agent will be liable for tax, interest, and penalties under §1.1474–1(a) to the extent it does not follow the presumption rules of paragraph (f) of this section for any payment, or portion thereof, for which a withholding statement is required and the withholding agent does not have a valid withholding statement prior to making a payment. A withholding agent that is making a withholdable payment for which a withholding statement is also required for purposes of chapter 3 may only rely upon the withholding statement if, in addition to providing the information required by paragraph (c)(3)(iii)(B) of this section, the withholding statement also includes all of the information required for purposes of chapter 3 and specifies the chapter 4 status of each payee or pool of payees identified on the withholding statement for purposes of chapter 3.

(*2*) *Special requirements for an FFI withholding statement*.

(*i*) An FFI withholding statement may include either payee-specific information or pooled information that indicates the portion of the payment allocable to a chapter 4 withholding rate pool of U.S. payees, each class of recalcitrant account holders identified in §1.1471–4(d)(6), or a class of nonparticipating FFIs. If payee-specific information is provided for purposes of chapter 4 it must indicate both the portion of the payment allocated to each payee and each payee's chapter 4 status. A participating FFI that applies the escrow procedures described in §1.1471–4(b)(6) for dormant accounts must also indicate the portion of the payment allocated to a chapter 4 withholding rate pool of recalcitrant account holders that hold dormant accounts for which the participating FFI (and not the withholding agent) will withhold in escrow. The withholding statement provided by a participating FFI that applies the election to backup withhold under §1.1471–4(b)(3)(iii) must also indicate the portion of the reportable payment that is a withholdable payment allocated to each recalcitrant account holders subject to backup withholding under section 3406. See section 3406 for when backup withholding is required, including the exception to backup withholding under §31.3406(g)–1(e). Regardless of whether the FFI withholding statement provides information on a pooled or payee-specific basis, a withholding statement provided by an FFI other than an FFI acting as a WP, WT, or QI with respect to the account must also identify each intermediary or flow-through entity that receives the payment and such entity's chapter 4 status and GIIN, when applicable. An FFI withholding statement must also include any other information that the withholding agent or payor reasonably requests in order to fulfill its obligations under chapter 4, and chapters 3 and 61, if applicable.

(*ii*) An FFI withholding statement provided by a reporting Model 2 FFI or a reporting Model 1 FFI may indicate, with respect to a withholdable payment, that the payment is allocable to a chapter 4 withholding rate pool of

U.S. payees, which is comprised of account holders that are not subject to withholding under chapters 3 or 4 or to backup withholding under section 3406 (for example, presumed U.S. non-exempt recipients) and that are, with respect to a reporting Model 2 FFI, the holders of non-consenting U.S. accounts as described in an applicable IGA when the FFI reports the accounts in one of the pools described in §1.1471–4(d)(6) for the year in which the payment is made; or with respect to a reporting Model 1 FFI, the holders of accounts that have U.S. indicia for which appropriate documentation sufficient to treat the accounts as held by other than specified U.S. persons has not been provided pursuant to an applicable Model 1 IGA and the reporting Model 1 FFI reports the accounts as U.S. reportable accounts pursuant to the applicable Model 1 IGA for the year in which the payment is made.

(*iii*) An FFI withholding statement provided by a participating FFI or registered deemed-compliant FFI that is a non-U.S. payor (a payor other than a U.S. payor as defined in §1.6049–5(c)(5)) may indicate, with respect to a withholdable payment, that the payment is allocable to a chapter 4 withholding rate pool of U.S. payees (in addition to the U.S. payees described in paragraph (c)(3)(iii)(B)(*2*)(*ii*) of this section), which is comprised of account holders that are not subject to withholding under chapters 3 or 4 or to backup withholding under section 3406 and that are, with respect to a participating FFI (including a reporting Model 2 FFI), account holders that hold U.S. accounts (as defined in §1.1471–1(b)(134) and an applicable Model 2 IGA) that the FFI reports as U.S. accounts pursuant to §1.1471–4(d)(3) or (5) for the year in which the payment is made; with respect to a registered deemed-compliant FFI (other than a reporting Model 1 FFI), account holders of U.S. accounts that the FFI reports pursuant to the conditions of its applicable deemed-compliant status under §1.1471–5(f)(1) for the year in which the payment is made; or with respect to a reporting Model 1 FFI, account holders of U.S. accounts that the reporting Model 1 FFI reports as reportable U.S. accounts pursuant to an applicable Model 1 IGA, and which includes the U.S. TINs of such account holders, for the year in which the payment is made.

(*3*) *Special requirements for a chapter 4 withholding statement.* A chapter 4 withholding statement must contain the name, address, TIN (if any), entity type, and chapter 4 status of each payee, the amount allocated to each payee, a valid withholding certificate or other appropriate documentation sufficient to establish the chapter 4 status of each payee, and each intermediary or flow-through entity that receives the payment on behalf of the payee, in accordance with paragraph (d) of this section, and any other information the withholding agent reasonably requests in order to fulfill its obligations under chapter 4. Notwithstanding the prior sentence, a chapter 4 withholding statement is permitted to provide pooled allocation information with respect to payees that are treated as nonparticipating FFIs. Additionally, if the payment is a reportable amount under chapters 3 or 61, see the provisions of those chapters for any additional information that may be required (including pooled information under the alternative procedures described in §1.1441–1(e)(3)(iv)(D), if applicable).

(*4*) *Special requirements for an exempt beneficial owner withholding statement.* An exempt beneficial owner withholding statement must include the name, address, TIN (if any), entity type, and chapter 4 status of each exempt beneficial owner on behalf of which the nonparticipating FFI is receiving the payment, the amount of the payment allocable to each exempt beneficial owner, a valid withholding certificate or other documentation sufficient to establish the chapter 4 status of each exempt beneficial owner in accordance with paragraph (d) of this section, and any other information the withholding agent reasonably requests in order to fulfill its obligations under chapter 4. The withholding statement must allocate the remainder of the payment that is not allocated to an exempt beneficial owner to the nonparticipating FFI receiving the payment. With respect to the amount of the payment allocable to each exempt

beneficial owner and subject to withholding under chapter 3, see §1.1441–1(e)(3)(iv).

(C) through (H) [Reserved] For further guidance, see §1.1471–3(c)(3)(iii)(C) through (H).

(iv) through (v) [Reserved] For further guidance, see §1.1471–3(c)(3)(iv) through (v).

(4) [Reserved] For further guidance, see §1.1471–3(c)(4).

(5) [Reserved] For further guidance, see §1.1471–3(c)(5).

(i) [Reserved] For further guidance, see §1.1471–3(c)(5)(i) through (c)(5)(i)(E).

(ii) [Reserved] For further guidance, see §1.1471–3(c)(5)(ii).

(A) [Reserved] For further guidance, see §1.1471–3(c)(5)(ii)(A).

(B) *Preexisting obligation documentary evidence.* With respect to a preexisting obligation of an entity, any classification in the withholding agent's records with respect to the payee that was determined based on documentation supplied by the payee (or other person receiving the payment) or a standardized industry coding system and that was recorded by the withholding agent consistent with its normal business practices for AML or another regulatory purpose (other than for tax purposes), to the extent permitted by paragraph (d) of this section and provided there is no U.S. indicia associated with the payee for which appropriate curing documentation has not been obtained as set forth in paragraph (e) of this section; and

(C) [Reserved] For further guidance, see §1.1471–3(c)(5)(ii)(C).

(6) [Reserved] For further guidance, see §1.1471–3(c)(6).

(i) [Reserved] For further guidance, see §1.1471–3(c)(6)(i).

(ii) [Reserved] For further guidance, see §1.1471–3(c)(6)(ii).

(A) [Reserved] For further guidance, see §1.1471–3(c)(6)(ii)(A).

(B) [Reserved] For further guidance, see §1.1471–3(c)(6)(ii)(B).

(*1*) through (*2*) [Reserved] For further guidance, see §1.1471–3(c)(6)(ii)(B)(*1*) through (*2*).

(*3*) A beneficial owner withholding certificate that is provided by an entity described in paragraph (c)(6)(ii)(C)(*2*) of this section (other than an entity described in paragraph (c)(6)(ii)(C)(*2*)(*iii*) of this section) and documentary evidence establishing the entity's foreign status when both are provided together;

(*4*) [Reserved] For further guidance, see §1.1471–3(c)(6)(ii)(B)(*4*).

(*5*) A withholding certificate, written statement, or documentary evidence furnished by a foreign government, government of a U.S. territory, foreign central bank (including the Bank for International Settlements), international organization, or entity that is wholly owned by any such entities;

(*6*) Documentary evidence that is not generally renewed or amended (such as a certificate of incorporation); and

(*7*) For the validity period of a beneficial owner withholding certificate provided by an entity described in paragraph (c)(6)(ii)(C)(*2*)(*iii*) of this section, see §1.1441–1(e)(4)(ii).

(C) [Reserved] For further guidance, see §1.1471–3(c)(6)(ii)(C).

(*1*) through (*2*) [Reserved] For further guidance, see §1.1471–3(c)(6)(ii)(C)(*1*) through (c)(6)(ii)(C)(*2*)(*x*).

(*3*) A withholding certificate or written statement of an owner-documented FFI, but not including the withholding statements, documentary evidence, and withholding certificates of its owners (unless such documentation is permitted indefinite validity under another provision);

(*4*) An owner reporting statement associated with a withholding certificate of an owner-documented FFI, provided the account balance of all accounts held by such owner-documented FFI with the withholding agent does not exceed $1,000,000 on the later of June 30, 2014, or the last day of the calendar year in which the account was opened, and the last day of each subsequent calendar year preceding the payment, applying the aggregation principles of §1.1471–5(b)(4)(iii), and the owner-documented FFI does not have any contingent beneficiaries or designated classes with unidentified beneficiaries; and

(*5*) A withholding certificate of a passive NFFE or excepted territory NFFE, provided the account balance of all accounts held by such entity with the withholding agent does not exceed $1,000,000 on the later of June 30, 2014, or the last day of the calendar year in which the account was opened, and the

last day of each subsequent calendar year preceding the payment, applying the aggregation principles of §1.1471–5(b)(4)(iii), and the withholding agent does not know or have reason to know that the entity has any contingent beneficiaries or designated classes with unidentified beneficiaries.

(D) [Reserved] For further guidance, see §1.1471–3(c)(6)(ii)(D).

(E) [Reserved] For further guidance, see §1.1471–3(c)(6)(ii)(E).

(*1*) through (*2*) [Reserved] For further guidance, see §1.1471–3(c)(6)(ii)(E)(*1*) through (*2*).

(*3*) *Withholding agent's obligation with respect to a change in circumstances.* A certificate or other documentation becomes invalid on the date that the withholding agent holding the certificate or documentation knows or has reason to know that circumstances affecting the correctness of the certificate or documentation have changed. However, a withholding agent may choose to treat a person as having the same chapter 4 status that it had prior to the change in circumstances until the earlier of 90 days from the date that the certificate or documentation became invalid due to the change in circumstances or the date that a new certificate or new documentation is obtained. See, however, §1.1441–1(e)(4)(ii)(D) for requirements, including the requirement to withhold under chapters 3 or 61, applicable when a change in circumstances occurs for purposes of chapter 3 and the related grace period allowed under §1.1441–1(b)(3)(iv). A withholding agent may rely on a certificate without having to inquire into possible changes of circumstances that may affect the validity of the statement, unless it knows or has reason to know that circumstances have changed. A withholding agent may require a new certificate or additional documentation at any time prior to a payment, regardless of whether the withholding agent knows or has reason to know that any information stated on the certificate or documentation has changed.

(iii) through (iii)(B) [Reserved] For further guidance, see §1.1471–3(c)(6)(iii) through (c)(6)(iii)(B).

(iv) *Electronic transmission of withholding certificate, written statement, and documentary evidence.* A withholding agent may accept a withholding certificate (including an acceptable substitute form), a written statement, or other such form as the IRS may prescribe, electronically in accordance with the requirements set forth in §1.1441–1(e)(4)(iv).

(v) [Reserved] For further guidance, see §1.1471–3(c)(6)(v).

(A) *In general.* A withholding agent may substitute its own form for an official Form W–8 (or such other official form as the IRS may prescribe). A substitute form will be acceptable if it contains provisions that are substantially similar to those of the official form, it contains the same certifications relevant to the transactions as are contained on the official form and these certifications are clearly set forth, and the substitute form includes a signature-under-penalties-of-perjury statement identical to the one on the official form. The substitute form is acceptable even if it does not contain all of the provisions contained on the official form, so long as it contains those provisions that are relevant to the transaction for which it is furnished. A withholding agent may choose to provide a substitute form that does not include all of the chapter 4 statuses provided on the official version but the substitute form must include any chapter 4 status for which withholding may apply, such as the categories for a nonparticipating FFI or passive NFFE. A withholding agent that uses a substitute form must furnish instructions relevant to the substitute form only to the extent and in the manner specified in the instructions to the official form. A withholding agent may use a substitute form that is written in a language other than English and may accept a form that is filled out in a language other than English, but the withholding agent must make available an English translation of the form and its contents to the IRS upon request. A withholding agent may refuse to accept a certificate (including the official Form W–8) from a person if the certificate provided is not an acceptable substitute form provided by the withholding agent, but only if the withholding agent furnishes the person

with an acceptable substitute form within five business days of receipt of an unacceptable form from the person. In that case, the substitute form is acceptable only if it contains a notice that the withholding agent has refused to accept the form submitted by the person and that the person must submit the acceptable form provided by the withholding agent in order for the person to be treated as having furnished the required withholding certificate.

(B) *Non-IRS form for individuals.* A withholding agent may also substitute its own form for an official Form W–8BEN (for individuals), regardless of whether the substitute form is titled a Form W–8. However, in addition to the name and address of the individual that is the payee or beneficial owner, the substitute form must provide all countries in which the individual is resident for tax purposes, country of birth, a tax identification number (if any) for each country of residence, the individual's date of birth, and must contain a signed and dated certification made under penalties of perjury that the information provided on the form is accurate and will be updated by the individual within 30 days of a change in circumstances that causes the form to become incorrect. Notwithstanding the previous sentence, the signed certification provided on a form need not be signed under penalties of perjury if the form is accompanied by documentary evidence that supports the individual's claim of foreign status. Such documentary evidence may be the same documentary evidence that is used to support foreign status in the case of a payee whose account has U.S. indicia as described in paragraph (e) of this section or §1.1471–4(c)(4)(i)(A). The form may also request other information required for purposes of tax or AML due diligence in the United States or in other countries.

(vi) through (vii) [Reserved] For further guidance, see §1.1471–3(c)(6)(vi) through (vii).

(7) through (7)(ii) [Reserved] For further guidance, see §1.1471–3(c)(7) through (c)(7)(ii).

(8) [Reserved] For further guidance, see §1.1471–3(c)(8).

(i) through (iv) [Reserved] For further guidance, see §1.1471–3(c)(8)(i) through (iv).

(v) *Preexisting account.* A withholding agent may rely on documentation furnished by a payee for a preexisting account held at another branch location of the same withholding agent or at a branch location of a member of the expanded affiliated group of the withholding agent if the withholding agent obtains and reviews copies of such documentation supporting the chapter 4 status designated for the payee and the withholding agent has no reason to know that, at the time the documentation is obtained by the withholding agent, the documentation is unreliable or incorrect. For example, the withholding agent may not rely on documentation furnished by a payee for a preexisting account held at another branch location of the same withholding agent or at a branch location of a member of the expanded affiliated group of the withholding agent if, based on information in the withholding agent's account records, the withholding agent has reason to know that such documentation is unreliable or incorrect.

(9) [Reserved] For further guidance, see §1.1471–3(c)(9).

(i) [Reserved] For further guidance, see §1.1471–3(c)(9)(i).

(ii) [Reserved] For further guidance, see §1.1471–3(c)(9)(ii).

(A) [Reserved] For further guidance, see §1.1471–3(c)(9)(ii)(A).

(B) The third-party data provider must be in the business of providing credit reports or business reports to customers unrelated to it and must have reviewed all information it has for the entity and verified that such additional information does not conflict with the chapter 4 status claimed by the entity. For purposes of this paragraph (c)(9)(ii)(B), a customer is related to a third-party data provider if they have a relationship with each other that is described in section 267(b).

(C) through (F) [Reserved] For further guidance, see §1.1471–3(c)(9)(ii)(C) through (F).

(iii) through (iv)(D) [Reserved] For further guidance, see §1.1471–3(c)(9)(iii) through (c)(9)(iv)(D).

(v) *Reliance upon documentation for accounts acquired in merger or bulk acquisition for value.* A withholding agent that acquires an account from a predecessor or transferor in a merger or bulk acquisition of accounts for value is permitted to rely upon valid documentation (or copies of valid documentation) collected by the predecessor or transferor. In addition, a withholding agent that acquires an account in a merger or bulk acquisition of accounts for value, other than a related party transaction, from a U.S. withholding agent, a participating FFI that has completed all due diligence required under its agreement with respect to the accounts transferred, or a reporting Model 1 FFI that has completed all due diligence required pursuant to the applicable Model 1 IGA, may also rely upon the predecessor's or transferor's determination of the chapter 4 status of an account holder for a transition period of the lesser of six months from the date of the merger or until the acquirer knows that the claim of status is inaccurate or a change in circumstances occurs. At the end of the transition period, the acquirer will be permitted to rely upon the predecessor's determination as to the chapter 4 status of the account holder only if the documentation that the acquirer has for the account holder, including documentation obtained from the predecessor or transferor, supports the chapter 4 status claimed. An acquirer that discovers at the end of the transition period that the chapter 4 status assigned by the predecessor or transferor to the account holder was incorrect and, as a result, has not withheld as it would have been required to but for its reliance upon the predecessor's determination, will be required to withhold on payments made after the transition period, if any, to the account holder equal to the amount of tax that should have been withheld during the transition period but for the erroneous classification as to the account holder's status. For purposes of this paragraph (c)(9)(v), a related party transaction is a merger or sale of accounts in which either the acquirer is in the same expanded affiliated group as the predecessor or transferor prior to or after the merger or acquisition or the predecessor or transferor (or shareholders of the predecessor or transferor) obtains a controlling interest in the acquirer or in a newly formed entity created for purposes of the merger or acquisition. See § 1.1471–4(c)(2)(ii)(B) for an additional allowance for a participating FFI to rely upon the determination made by another participating FFI as to the chapter 4 status of an account obtained as part of a merger or bulk acquisition for value.

(d) [Reserved] For further guidance, see § 1.1471–3(d).

(1) *Reliance on pre-FATCA Form W–8.* To establish a payee's status as a foreign individual, foreign government, government of a U.S. territory, or international organization, a withholding agent may rely upon a pre-FATCA Form W–8 in lieu of obtaining an updated version of the withholding certificate. This reliance is only available in the case of a payee that is an international organization if such payee is described under section 7701(a)(18). To establish the chapter 4 status of a payee that is not a foreign individual, a foreign government, or an international organization, a withholding agent may, for payments made prior to January 1, 2017, rely upon a pre-FATCA Form W–8 in lieu of obtaining an updated version of the withholding certificate if the withholding agent has one or more forms of documentary evidence described in paragraphs (c)(5)(ii), as necessary, to establish the chapter 4 status of the payee and the withholding agent has obtained any additional documentation or information required for the particular chapter 4 status (such as withholding statements, certifications as to owners, or required documentation for underlying owners), as set forth under the specific payee rules in paragraphs (d)(2) through (12) of this section. See paragraph (d)(4)(ii) and (iv) of this section for specific requirements applicable when relying upon a pre-FATCA Form W–8 for a participating FFI or registered deemed-compliant FFI. This paragraph (d)(1) does not apply to nonregistering local banks, FFIs with only low-value accounts, sponsored FFIs, owner-documented FFIs, territory financial institutions that are not the

beneficial owners of the payment, foreign central banks (other than a foreign central bank specifically identified as an exempt beneficial owner under a Model 1 IGA or Model 2 IGA), or international organizations not described under section 7701(a)(18).

(2) [Reserved] For further guidance, see § 1.1471–3(d)(2).

(i) *In general.* A withholding agent must treat a payee as a U.S. person, including a payee that is a foreign branch of a U.S. person (other than a branch that is treated as a QI) or is an FFI that has elected to be treated as a U.S. person for tax purposes under section 953(d), if it has a valid Form W–9 associated with the payee or if it must presume the payee is a U.S. person under the presumption rules set forth in paragraph (f) of this section. Consistent with the presumption rules in paragraph (f)(3) of this section, a withholding agent must treat a payee that has provided a valid Form W–9 as a specified U.S. person unless the Form W–9 contains a certification that the payee is other than a specified U.S. person. Notwithstanding the foregoing, a withholding agent receiving a Form W–9 indicating that the payee is other than a specified U.S. person must treat the payee as a specified U.S. person if the withholding agent knows or has reason to know that the payee's claim that it is other than a specified U.S. person is incorrect. For example, a withholding agent that receives a Form W–9 from a payee that is an individual would be required to treat the payee as a specified U.S. person regardless of whether the Form W–9 indicates that the payee is not a specified U.S. person, because an individual that is a U.S. person is not excepted from the definition of a specified U.S. person.

(ii) [Reserved] For further guidance, see § 1.1471–3(d)(2)(ii).

(iii) *Preexisting obligations.* As an alternative to applying the rules in paragraphs (d)(2)(i) and (ii) of this section, a withholding agent that makes a payment with respect to a preexisting obligation may treat a payee as a U.S. person if it has a notation in its files that it has previously reviewed a Form W–9 that established that the payee is a U.S. person and has retained the payee's TIN. A withholding agent, other than a participating FFI or registered deemed-compliant FFI, may also treat a payee of a payment with respect to a preexisting obligation as a U.S. person if it has previously classified the payee as a U.S. person for purposes of chapters 3 or 61 and established (through the documentation or the application of the rules in § 1.6049–4(c)(1)(ii)) that the payee is an exempt recipient for purposes of chapter 61.

(3) through (3)(ii) [Reserved] For further guidance, see § 1.1471–3(d)(3) through (d)(3)(ii).

(4) [Reserved] For further guidance, see § 1.1471–3(d)(4).

(i) *In general.* Except as otherwise provided in paragraphs (d)(4)(ii) through (iv) or paragraphs (e)(3)(i) and (ii) of this section, a withholding agent may treat a payee as a participating FFI or registered deemed-compliant FFI only if the withholding agent has a withholding certificate identifying the payee as a participating FFI, registered deemed-compliant FFI, or branch thereof (including an entity that is disregarded as an entity separate from the FFI), and the withholding certificate contains a GIIN for the payee that is verified against the published IRS FFI list in the manner described in paragraph (e)(3) of this section (indicating when a withholding agent may rely upon a GIIN). For payments made prior to January 1, 2016, a registered deemed-compliant FFI that is a sponsored FFI must provide the GIIN of its sponsoring entity on the withholding certificate if the sponsored FFI has not obtained a GIIN, which the withholding agent has verified against the published IRS FFI list in the manner described in paragraph (e)(3) of this section (substituting the term *sponsored FFI* for the term *sponsored direct reporting NFFE*). See paragraph (c)(3)(iii) of this section for additional requirements that apply to a valid withholding certificate provided by a participating FFI or registered deemed-compliant FFI that is a flow-through entity or is acting as an intermediary with respect to the payment, or by a U.S. branch of a participating FFI or registered deemed-compliant FFI (including a U.S. entity that is disregarded as an entity separate from the FFI).

(ii) *Exception for payments made prior to January 1, 2017, with respect to preexisting obligations (transitional).* For payments made prior to January 1, 2017, with respect to a preexisting obligation, a withholding agent may treat a payee as a participating FFI or registered deemed-compliant FFI, or branch thereof (including an entity that is disregarded as an entity separate from the FFI), if the payee has provided the withholding agent with a pre-FATCA Form W–8 and (either orally or in writing) its GIIN and has indicated whether it is a participating FFI or a registered deemed-compliant FFI (or whether such branch or disregarded entity is treated as a participating FFI or a registered deemed-compliant FFI), and the withholding agent has verified the GIIN of the FFI, branch, or disregarded entity, as the context requires, in the manner described in paragraph (e)(3) of this section.

(iii) *Exception for offshore obligations.* A withholding agent that makes a payment, other than a payment of U.S. source FDAP income, with respect to an offshore obligation may treat a payee as a participating FFI or registered deemed-compliant FFI, or branch thereof (including an entity that is disregarded as an entity separate from the FFI), if the payee provides the withholding agent with its GIIN and states whether the payee is a participating FFI or a registered deemed-compliant FFI, and the withholding agent verifies the GIIN in the manner described in paragraph (e)(3) of this section. A withholding agent that makes a payment of U.S. source FDAP income with respect to an offshore obligation may treat the payee as a participating FFI or registered deemed-compliant FFI, or branch thereof (including an entity that is disregarded as an entity separate from the FFI) if—

(A) [Reserved] For further guidance, see §1.1471–3(d)(4)(iii)(A).

(*1*) A written statement that contains the payee's GIIN, states that the payee is the beneficial owner of the payment, and indicates whether the payee is treated as a participating FFI or a registered deemed-compliant FFI, as appropriate; and

(*2*) [Reserved] For further guidance, see §1.1471–3(d)(4)(iii)(A)(*2*).

(B) [Reserved] For further guidance, see §1.1471–3(d)(4)(iii)(B).

(iv) [Reserved] For further guidance, see §1.1471–3(d)(4)(iv).

(A) For payments made prior to January 1, 2015, a withholding agent may treat a payee that is an FFI or branch of an FFI (including an entity that is disregarded as an entity separate from the FFI) as a reporting Model 1 FFI if it receives a withholding certificate from the payee indicating that the payee is a reporting Model 1 FFI and the country in which the payee is a reporting Model 1 FFI, regardless of whether the certificate contains a GIIN for the payee.

(B) [Reserved] For further guidance, see §1.1471–3(d)(4)(iv)(B).

(C) For payments made prior to January 1, 2015, with respect to an offshore obligation, a withholding agent may treat a payee as a reporting Model 1 FFI if the payee informs the withholding agent that the payee is a reporting Model 1 FFI and provides the country in which the payee is a reporting Model 1 FFI. In the case of a payment of U.S. source FDAP income, such payee must also provide a written statement that it is the beneficial owner and documentary evidence supporting the payee's claim of foreign status (as described in paragraph (c)(5)(i) of this section).

(D) For payments made on or after January 1, 2015, that do not constitute U.S. source FDAP income, the withholding agent may continue to treat a payee as a reporting Model 1 FFI if the payee provides the withholding agent with its GIIN, either orally or in writing, and the withholding agent verifies the GIIN in the manner described in paragraph (e)(3) of this section.

(v) *Reason to know.* Except as otherwise provided in this paragraph (d)(4), a withholding certificate or written statement pursuant to which the payee claims a status as a participating FFI or registered deemed-compliant FFI but does not provide the payee's GIIN or provides a GIIN that does not appear on the current published IRS FFI list will be invalid for purposes of chapter 4 beginning on the date that is 90 days after the date that the claim is made by the payee. The payee will be treated as an undocumented payee beginning

on the date that the form is invalid, and will be subject to withholding on payments made on or after that date until valid documentation (which includes a confirmed GIIN under paragraph (e)(3)(i) of this section) is provided. A withholding agent that has withheld as required in the previous sentence may apply reimbursement or set-off procedures, as described in §1.1474–2(a), if it is later determined that the payee appeared on the IRS FFI list as a participating FFI or registered deemed-compliant FFI at the time of payment.

(5) [Reserved] For further guidance, see §1.1471–3(d)(5).

(i) *In general.* Except as otherwise provided in this paragraph (d)(5), a withholding agent may treat a payee as a certified deemed-compliant FFI, other than a sponsored, closely held investment vehicle, if the withholding agent has a withholding certificate that identifies the payee as a certified deemed-compliant FFI, and the withholding certificate contains a certification by the payee that it meets the requirements to qualify as the type of certified deemed-compliant FFI identified on the withholding certificate. See paragraph (c)(3)(iii) of this section for additional requirements that apply to a valid withholding certificate provided by a certified deemed-compliant FFI that is a flow-through entity or is acting as an intermediary with respect to the payment, or by a U.S. branch of a certified deemed-compliant FFI.

(ii) *Sponsored, closely held investment vehicles*— (A) *In general.* A withholding agent may treat a payee as a sponsored, closely held investment vehicle described in §1.1471–5(f)(2)(iii) if the withholding agent can reliably associate the payment with a withholding certificate that identifies the payee as a sponsored, closely held investment vehicle and includes the sponsoring entity's GIIN, which the withholding agent has verified against the published IRS FFI list in the manner described in paragraph (e)(3) of this section. In addition to the standards of knowledge rules indicated in paragraph (e) of this section, a withholding agent will have reason to know that the payee is not a sponsored, closely held investment vehicle described in §1.1471–5(f)(2)(iii) if its AML due diligence indicates that the payee has in excess of 20 individual investors that own direct and/or indirect interests in the payee. See paragraph (c)(3)(iii) of this section for additional requirements that apply to a valid withholding certificate provided by a sponsored, closely held investment vehicle that is a flow-through entity or is acting as an intermediary with respect to the payment, or by a U.S. branch of such vehicle.

(B) *Offshore obligations.* A withholding agent that makes a payment with respect to an offshore obligation may treat a payee as a sponsored, closely held investment vehicle if it obtains a written statement that indicates that the payee is a sponsored, closely held investment vehicle, and provides the sponsoring entity's GIIN, which the withholding agent has verified in the manner described in paragraph (e)(3) of this section. In the case of a payment of U.S. source FDAP income, the written statement must also indicate that the payee is the beneficial owner and must be supplemented with documentary evidence supporting the payee's claim of foreign status (as described in paragraph (c)(5)(i) of this section).

(iii) *Investment advisors and investment managers.*

(A) *In general.* A withholding agent may treat a payee as an investment advisor and investment manager described in §1.1471–5(f)(2)(v) if the withholding agent can reliably associate the payment with a withholding certificate that identifies the payee as an investment advisor and investment manager. In addition to the standards of knowledge rules indicated in paragraph (e) of this section, a withholding agent will have reason to know that the payee is not an investment advisor and investment manager described in §1.1471–5(f)(2)(v) if its AML due diligence documentation indicates that the payee has financial accounts.

(B) *Offshore obligations.* A withholding agent that makes a payment with respect to an offshore obligation may treat a payee as an investment advisor and investment manager described in §1.1471–5(f)(2)(v) if it obtains a written statement that indicates

that the payee is an investment advisor and investment manager. In the case of a payment of U.S. source FDAP income, the written statement must also indicate that the payee is the beneficial owner and must be supplemented with documentary evidence supporting the payee's claim of foreign status (as described in paragraph (c)(5)(i) of this section).

(6) [Reserved] For further guidance, see §1.1471–3(d)(6).

(i) through (vi) [Reserved] For further guidance, see §1.1471–3(d)(6)(i) through (vi).

(vii) [Reserved] For further guidance, see §1.1471–3(d)(6)(vii).

(A) [Reserved] For further guidance, see §1.1471–3(d)(6)(vii)(A).

(*1*) The payment is made with respect to an offshore obligation that has a balance or value not exceeding $1,000,000 on the later of June 30, 2014, or the last day of the calendar year in which the account was opened, and the last day of each subsequent year preceding the payment, applying the aggregation principles of §1.1471–5(b)(4);

(*2*) through (*5*) [Reserved] For further guidance, see §1.1471–3(d)(6)(vii)(A)(*2*) through (*5*).

(B) [Reserved] For further guidance, see §1.1471–3(d)(6)(vii)(B).

(7) through (10)(iii) [Reserved] For further guidance, see §1.1471–3(d)(7) through (d)(10)(iii).

(11) [Reserved] For further guidance, see §1.1471–3(d)(11).

(i) through (vii)(B)(*3*) [Reserved] For further guidance, see §1.1471–3(d)(11)(i) through (d)(11)(vii)(B)(*3*).

(viii) [Reserved] For further guidance, see §1.1471–3(d)(11)(viii).

(A) *Exception for payments made prior to January 1, 2017, with respect to preexisting obligations of $1,000,000 or less (transitional).* A withholding agent that makes a payment prior to January 1, 2017, with respect to a preexisting obligation with a balance or value not exceeding $1,000,000 on June 30, 2014, and December 31, 2015, applying the aggregation principles of §1.1471–5(b)(4)(iii), may treat a payee as an excepted territory NFFE described in §1.1472–1(c)(1)(iii) if the withholding agent—

(*1*) through (*3*) [Reserved] For further guidance, see §1.1471–3(d)(11)(viii)(A)(*1*) through (*3*).

(B) through (B)(*2*) [Reserved] For further guidance, see §1.1471–3(d)(11)(viii)(B) through (d)(11)(viii)(B)(*2*).

(C) *Exception for preexisting offshore obligations of $1,000,000 or less.* A withholding agent that makes a payment with respect to an offshore obligation that is also a preexisting obligation with a balance or value not exceeding $1,000,000 on June 30, 2014 (or the effective date of the FFI agreement for a withholding agent that is a participating FFI) and the last day of each subsequent calendar year preceding the payment, applying the aggregation principles of §1.1471–5(b)(4)(iii), may rely upon its review conducted for AML due diligence purposes to determine whether the owners of the payee are bona fide residents of the U.S. territory in which the payee is organized, in lieu of obtaining a written statement or documentary evidence described in paragraph (d)(11)(viii)(B) of this section. The preceding sentence applies only if the withholding agent is subject, with respect to such account, to the laws of a FATF-compliant jurisdiction and has identified the residence of the owners. The withholding agent relying upon this paragraph (d)(11)(viii)(C) must still obtain a written statement, documentary evidence (as provided in paragraph (d)(11)(viii)(B) of this section), or preexisting account documentary evidence (as described in paragraph (c)(5)(ii)(B) of this section) establishing that the payee is an entity other than a depository institution, custodial institution, or specified insurance company organized in a U.S. territory.

(ix) through (ix)(C) [Reserved] For further guidance, see §1.1471–3(d)(11)(ix) through (d)(11)(ix)(C).

(x) *Identifying a direct reporting NFFE*—(A) *In general.* A withholding agent may treat a payment as having been made to a direct reporting NFFE if it has a withholding certificate that identifies the payee as a direct reporting NFFE and the withholding certificate contains a GIIN for the payee that is verified against the published IRS FFI list in the manner described in paragraph (e)(3)(iii) of this section (indicating when a withholding agent may rely upon a GIIN).

(B) *Exception for offshore obligations.* A withholding agent that makes a payment with respect to an offshore obligation may treat the payment as made to a direct reporting NFFE if the withholding agent has—

(*1*)(*i*) General documentary evidence (as described in paragraph (c)(5)(ii)(A) of this section) for the payee providing sufficient information to determine that the payee is a foreign entity that is not a financial institution; or

(*ii*) A written statement that the payee is a foreign entity that is not a financial institution and, for a payment of U.S. source FDAP income, documentary evidence supporting the payee's claim of foreign status (as described in paragraph (c)(5)(i) of this section), and

(*2*) Received (either orally or in writing) a GIIN from the direct reporting NFFE and has verified the GIIN in the manner described in paragraph (e)(3)(iii) of this section.

(C) *Special rule for preexisting offshore obligations.* A withholding agent that makes a payment with respect to an offshore obligation that is also a preexisting obligation may treat the payee as a direct reporting NFFE if the withholding agent has preexisting account documentary evidence (as described in paragraph (c)(5)(ii)(B) of this section) providing sufficient information to determine that the payee is a foreign entity that is not a financial institution and it has received (either orally or in writing) a GIIN from the direct reporting NFFE and has verified the GIIN in the manner described in paragraph (e)(3)(iii) of this section.

(xi) *Identifying a sponsored direct reporting NFFE*—(A) *In general.* A withholding agent may treat a payment as having been made to a sponsored direct reporting NFFE if it has a withholding certificate that identifies the payee as a sponsored direct reporting NFFE and the withholding certificate includes the sponsored direct reporting NFFE's GIIN, which the withholding agent has verified against the published IRS FFI list in the manner described in paragraph (e)(3)(iv) of this section (indicating when a withholding agent may rely upon a GIIN). For payments prior to January 1, 2016, a sponsored direct reporting NFFE may provide the GIIN of its sponsoring entity on the withholding certificate if the sponsored direct reporting NFFE has not obtained a GIIN.

(B) *Exception for offshore obligations.* A withholding agent that makes a payment with respect to an offshore obligation may treat the payment as made to a sponsored direct reporting NFFE if the withholding agent has—

(*1*) A written statement that the payee is a foreign entity that is a sponsored direct reporting NFFE and, for a payment of U.S. source FDAP income, documentary evidence supporting the payee's claim of foreign status (as described in paragraph (c)(5)(i) of this section), and

(*2*) Received (either orally or in writing) the GIIN of the sponsored direct reporting NFFE and has verified the GIIN in the manner described in paragraph (e)(3)(iv) of this section. For payments prior to January 1, 2016, such requirement may be fulfilled by receiving (either orally or in writing) the GIIN of the sponsoring entity to the extent that the sponsored direct reporting NFFE has not obtained a GIIN.

(xii) *Identification of excepted inter-affiliate FFI.*

(A) *In general.* A participating FFI may treat a payee as an excepted inter-affiliate FFI described in §1.1471–5(e)(5)(iv) if it has obtained a withholding certificate identifying the payee as such an entity.

(B) *Offshore obligations.* A participating FFI that makes a payment with respect to an offshore obligation may treat the payment as made to an excepted inter-affiliate FFI described in §1.1471–5(e)(5)(iv) if the participating FFI obtains a written statement in which the payee certifies that it is a foreign entity operating as an excepted inter-affiliate FFI and that it is a member of an expanded affiliated group of participating FFIs or registered deemed-compliant FFIs. In the case of a payment of U.S. source FDAP income, the written statement must also indicate that the payee is the beneficial owner and must be supplemented with documentary evidence supporting the payee's claim of foreign status (as described in paragraph (c)(5)(i) of this section).

(C) *Reason to know.* A participating FFI has reason to know that an entity is not an excepted inter-affiliate FFI if it makes any payments (other than a payment of bank deposit interest) to such entity.

(12) [Reserved] For further guidance, see §1.1471–3(d)(12).

(i) through (ii) [Reserved] For further guidance, see §1.1471–3(d)(12)(i) through (ii).

(iii) [Reserved] For further guidance, see §1.1471–3(d)(12)(iii).

(A) *In general.* A passive NFFE will be required to provide to the withholding agent either a written certification (contained on a withholding certificate or in a written statement) that it does not have any substantial U.S. owners or the name, address, and TIN of each substantial U.S. owner of the NFFE, to avoid being withheld upon under §1.1472–1(b).

(B) *Exception for preexisting obligations of $1,000,000 or less (transitional).* A withholding agent that makes a payment prior to January 1, 2017, with respect to a preexisting obligation with a balance or value not exceeding $1,000,000 on June 30, 2014, and December 31, 2015, applying the aggregation principles of §1.1471–5(b)(4)(iii), may rely upon its review conducted for AML due diligence purposes to identify any substantial U.S. owners of the payee in lieu of obtaining the certification or information required in paragraph (d)(12)(iii)(A) of this section if the withholding agent is subject, with respect to such obligation, to the laws of a FATF-compliant jurisdiction and has identified the residence of any controlling persons (within the meaning of the withholding agent's AML due diligence rules). A withholding agent that makes a payment with respect to an offshore obligation that is also a preexisting obligation with a balance or value not exceeding $1,000,000 on June 30, 2014, (or the effective date of the FFI agreement for a withholding agent that is a participating FFI) and the last day of each subsequent calendar year preceding the payment, applying the aggregation principles of §1.1471–5(b)(4)(iii), may rely upon its review conducted for AML due diligence purposes to identify any substantial U.S. owners of the payee in lieu of obtaining the certification or information required in paragraph (d)(12)(iii)(A) of this section if the withholding agent is subject, with respect to such obligation, to the laws of a FATF-compliant jurisdiction and has identified the residence of any controlling persons (within the meaning of the withholding agent's AML due diligence rules).

(e) [Reserved] For further guidance, see §1.1471–3(e).

(1) [Reserved] For further guidance, see §1.1471–3(e)(1).

(2) *Notification by the IRS.* A withholding agent that has received notification by the IRS that a claim of status as a U.S. person, a participating FFI, a deemed-compliant FFI, or other entity entitled to a reduced rate of withholding under section 1471 or 1472 is incorrect knows that such a claim is incorrect beginning on the date that is 30 days after the date the notice is received.

(3) *GIIN verification.*

(i) *In general.* A withholding agent that has received a payee's claim of status as a participating FFI or registered deemed-compliant FFI, and that is required under paragraph (d)(4) of this section to confirm that the FFI or branch thereof (including an entity that is disregarded as an entity separate from the FFI) claiming status as a participating FFI or registered deemed-compliant FFI has a GIIN that appears on the published IRS FFI list, has reason to know that such payee is not such a financial institution if the payee's name (including a name reasonably similar to the name the withholding agent has on file for the payee) and GIIN do not appear on the most recently published IRS FFI list within 90 days of the date that the claim is made. For purposes of this paragraph (e)(3)(i), the GIIN that the withholding agent must confirm is, with respect to a payee that is a participating FFI or registered deemed-compliant FFI, the GIIN assigned to the FFI identifying its country of residence for tax purposes (or place of organization if the FFI has no country of residence) or, with respect to a payment that is made to a branch of, or an entity that is disregarded as an entity separate from, a participating FFI or registered deemed-compliant FFI located outside

of the FFI's country of residence or organization, the GIIN assigned to the FFI identifying the country in which the branch or disregarded entity receiving the payment is located. The withholding agent will have reason to know that a withholdable payment is made to a limited branch (including a disregarded entity) of a participating or registered deemed-compliant FFI when it is directed to make the payment to an address in a jurisdiction other than that of the participating FFI or registered deemed-compliant FFI (or branch of, or disregarded entity wholly owned by, such FFI) that is identified as the FFI (or branch of, or disregarded entity wholly owned by, such FFI) that is supposed to receive the payment and for which the FFI's GIIN is not confirmed as described in the preceding sentence. For example, if a participating FFI has identified Branch A, located in Jurisdiction A, as its branch to receive withholdable payments on a withholding certificate described in §1.1471–3(e)(3)(ii), but subsequently directs the withholding agent to make the payment to an address of the FFI in Jurisdiction B, then the withholding agent will have reason to know that the payment is made to a limited branch, unless the withholding agent obtains documentation to treat the payment to the address in Jurisdiction B as made to a payee that is a participating FFI or deemed-compliant FFI. An FFI whose registration with the IRS as a participating FFI or a registered deemed-compliant FFI is in process but has not yet received a GIIN may provide a withholding agent with a Form W–8 claiming the chapter 4 status it applied for and writing ''applied for'' in the box for the GIIN. In such case, the withholding agent will have 90 days from the date it receives the Form W–8 to obtain a GIIN and to verify the accuracy of the GIIN against the published IRS FFI list before it has reason to know that the payee is not a participating FFI or registered deemed-compliant FFI. If an FFI is removed from the published IRS FFI list, the withholding agent knows that such FFI is not a participating FFI or registered deemed-compliant FFI on the earlier of the date that the withholding agent discovers that the FFI has been removed from the list or the date that is one year from the date the FFI's GIIN was actually removed from the list.

(ii) *Special rules for reporting Model 1 FFIs.* Prior to January 1, 2015, a withholding agent that receives an FFI's claim of status as a reporting Model 1 FFI will not be required to confirm that the FFI has a GIIN that appears on the published IRS FFI list. A withholding agent has reason to know that the FFI is not a reporting Model 1 FFI if the withholding agent does not have a permanent residence address for the FFI, or an address of the relevant branch of the FFI, located in the country in which the FFI claims to be a reporting Model 1 FFI, or the withholding agent is making a payment to a branch of the FFI at an address in a country that does not have in effect a Model 1 IGA.

(iii) *Special rules for direct reporting NFFEs.* A withholding agent that has received a payee's claim of status as a direct reporting NFFE and that is required under paragraph (d)(11)(x) of this section to confirm that the entity claiming status as a direct reporting NFFE has a GIIN that appears on the published IRS FFI list, has reason to know that such payee is not such a NFFE if the payee's name (including a name reasonably similar to the name the withholding agent has on file for the payee) and GIIN do not appear on the most recently published IRS FFI list within 90 days of the date that the claim is made. A payee whose registration with the IRS as a direct reporting NFFE is in process but has not yet received a GIIN may provide a withholding agent with a Form W–8 claiming the chapter 4 status it applied for and writing ''applied for'' in the box for the GIIN. In such case, the withholding agent will have 90 days from the date it receives the Form W–8 to verify the accuracy of the GIIN against the published IRS FFI list before it has reason to know that the payee is not a direct reporting NFFE. If a direct reporting NFFE is removed from the published IRS FFI list, the withholding agent knows that such NFFE is not a direct reporting NFFE on the earlier of the

date that the withholding agent discovers that the NFFE has been removed from the list or the date that is one year from the date the NFFE's GIIN was actually removed from the list.

(iv) *Special rules for sponsored direct reporting NFFEs and sponsoring entities*—(A) *Sponsored direct reporting NFFEs.* A withholding agent that has received a payee's claim of status as a sponsored direct reporting NFFE and that is required under paragraph (d)(11)(xi) of this section to confirm that the entity claiming status as a sponsored direct reporting NFFE has a GIIN that appears on the published IRS FFI list, has reason to know that such payee is not such a NFFE if its name (including a name reasonably similar to the name the withholding agent has on file for the payee) and GIIN do not appear on the most recently published IRS FFI list within 90 days of the date that the claim is made. A sponsored direct reporting NFFE whose registration with the IRS as a sponsored direct reporting NFFE is in process but has not yet received a GIIN may provide a withholding agent with a Form W–8 claiming the chapter 4 status it applied for and writing ''applied for'' in the box for the GIIN. In such case, the withholding agent will have 90 days from the date it receives the Form W–8 to verify the accuracy of the GIIN against the published IRS FFI list before it has reason to know that the payee is not a sponsored direct reporting NFFE. If a sponsored direct reporting NFFE is removed from the published IRS FFI list, the withholding agent knows that such NFFE is not a sponsored direct reporting NFFE on the earlier of the date that the withholding agent discovers that the sponsored entity has been removed from the list or the date that is one year from the date the sponsored entity's GIIN was actually removed from the list.

(B) *Sponsoring entities (transitional rule).* For payments made prior to January 1, 2016, a withholding agent that has received a payee's claim of status as a sponsored direct reporting NFFE has reason to know that such payee is not such a NFFE if the name of its sponsoring entity (including a name reasonably similar to the name the withholding agent has on file for the sponsoring entity) and the GIIN of its sponsoring entity do not appear on the most recently published IRS FFI list within 90 days of the date that the claim is made. A sponsoring entity whose registration with the IRS is in process but has not yet received a GIIN may provide a withholding agent with a Form W–8 claiming the chapter 4 status it applied for and writing ''applied for'' in the box for the GIIN. In such case, the withholding agent will have 90 days from the date it receives the Form W–8 to verify the accuracy of the GIIN against the published IRS FFI list before it has reason to know that the payee is not a sponsored direct reporting NFFE. If the sponsoring entity of the NFFE is removed from the published IRS FFI list, the withholding agent knows that such NFFE is not a sponsored direct reporting NFFE on the earlier of the date that the withholding agent discovers that the sponsoring entity has been removed from the list or the date that is one year from the date the sponsoring entity's GIIN was actually removed from the list.

(4) *Reason to know.* A withholding agent has reason to know that a claim of chapter 4 status is unreliable or incorrect if its knowledge of relevant facts or statements contained in the withholding certificate or other documentation is such that a reasonably prudent person in the position of the withholding agent would question the claim being made. For an obligation other than a preexisting obligation, a withholding agent has reason to know that a person's claim of chapter 4 status is unreliable or incorrect if any information contained in its account opening files or other customer account files, including documentation collected for AML due diligence purposes, conflicts with the chapter 4 status being claimed. A withholding agent will not, however, have reason to know that a person's claim of chapter 4 status is unreliable or incorrect based on documentation collected for AML due diligence purposes until the date that is 30 days after the obligation is created. In addition to the specific standards of knowledge set forth in this paragraph (e) regarding a person's

claim of chapter 4 status, a withholding agent is also required to apply any specific standards of knowledge applicable to the chapter 4 status claimed as set forth in paragraph (d) of this section. A withholding agent that has obtained documentation to reliably associate a payment to a foreign person under paragraph (c) of this section has reason to know that the person's claim of foreign status is unreliable or incorrect only to the extent provided in this paragraph (e)(4). See also §1.1441–1(e)(4)(ii)(D) for requirements that apply when a change in circumstances occurs for purposes of chapter 3 and the related grace period allowed under §1.1441–1(b)(3)(iv). The limits on reason to know for multiple obligations held by the same person set forth in §1.1441–7(b)(11) shall apply by substituting the term *chapter 4 status* for the term *foreign status*. See §1.1471–3(e)(4)(vii) for the limits on reason to know with respect to a preexisting obligation.

(i) *Reason to know regarding an entity's chapter 4 status.* A withholding agent has reason to know that a withholding certificate, written statement, or documentary evidence provided by or on behalf of an entity is unreliable or incorrect if there is information on the face of the documentation or in the withholding agent's account files that conflicts with the entity's claim regarding its chapter 4 status. For example, a withholding agent has reason to know that an entity's claim that it is an excepted NFFE is unreliable or incorrect if the withholding agent has obtained a financial statement or credit report for AML purposes that indicates that the entity is engaged in business as a financial institution. See also paragraph (e)(4) of this section for the 30-day period before a withholding agent has reason to know a claim is unreliable or incorrect based on AML information. Further, a withholding agent that has classified an entity as engaged in a particular type of business based on its records, such as through the use of a standardized industry coding system, has reason to know that the chapter 4 status claimed by the entity is unreliable or incorrect if the entity's claim conflicts with the withholding agent's classification of the entity's business type.

(ii) *Reason to know applicable to withholding certificates*—(A) *In general.* A withholding agent has reason to know that a withholding certificate provided by a person is unreliable or incorrect if the withholding certificate is incomplete with respect to any item on the certificate that is relevant to the claims made by the person, the withholding certificate contains any information that is inconsistent with the person's claim, the withholding agent has other account information that is inconsistent with the person's claim, or the withholding certificate lacks information necessary to establish entitlement to an exemption from withholding for chapter 4 purposes. Except as otherwise provided in this paragraph (e)(4)(ii)(A), a withholding agent that is a financial institution or other entity described in §1.1441–7(b)(3) and that has obtained a withholding certificate to reliably associate a payment to a foreign person under paragraph (c) of this section has reason to know that the person's claim of foreign status is unreliable or incorrect only if there are U.S. indicia, as described in §1.1441–7(b)(5), associated with the person and for which appropriate documentation sufficient to cure the U.S. indicia has not been obtained in accordance with §1.1441–7(b) within 90 days of when the U.S. indicia was first identified by the withholding agent. See also §1.1441–1(e)(4)(ii)(D) for requirements that apply when a change in circumstances occurs for purposes of chapter 3 and the related grace period allowed under §1.1441–1(b)(3)(iv). A withholding agent that relies on an agent to review and maintain a withholding certificate is considered to know or have reason to know the facts within the knowledge of the agent.

(B) *Withholding certificate provided by an FFI.* A withholding agent that obtains a withholding certificate to reliably associate a payment to a participating FFI, a registered deemed-compliant FFI, a sponsoring entity, or a sponsored FFI does not need to apply the standards of knowledge described in §1.1441–7(b)(5) if it has confirmed the FFI's GIIN on the current published IRS FFI list, in the manner described under paragraph (e)(3) of this section,

within 90 days of receipt of the withholding certificate.

(iii) *Reason to know applicable to written statements.* A withholding agent must apply the standards of knowledge applicable to withholding certificates, as set forth in paragraph (e)(4)(ii) of this section, to determine whether it has reason to know that a written statement is unreliable or incorrect in terms of establishing a person's claim of foreign status. The rules under paragraph (e)(4)(ii) shall be applied by substituting the term *written statement* for *withholding certificate.*

(iv) *Reason to know applicable to documentary evidence*—(A) *In general.* A withholding agent may not treat documentary evidence provided by a person as valid if the documentary evidence does not reasonably establish the identity of the person presenting the documentary evidence. For example, documentary evidence is not valid if it is provided in person by an individual and the photograph or signature on the documentary evidence does not match the appearance or signature of the person presenting the document. A withholding agent may not treat documentary evidence as valid if the documentary evidence contains information that is inconsistent with the person's claim as to its chapter 4 status, the withholding agent has other account information that is inconsistent with the person's chapter 4 status, or the documentary evidence lacks information necessary to establish the person's chapter 4 status. Additionally, a withholding agent that is a financial institution under §1.1471–5(e), or other entity as described in §1.1441–7(b)(3) that has obtained documentary evidence to reliably associate a payment to a foreign person under paragraph (c) of this section has reason to know that the person's claim of foreign status is unreliable or incorrect only if there are U.S. indicia, as described in §1.1441–7(b)(8), associated with the person and appropriate documentation sufficient to cure the U.S. indicia has not been obtained in accordance with §1.1441–7(b) within 90 days of when the U.S. indicia was first identified by the withholding agent. See also §1.1441–1(e)(4)(ii)(D) for requirements when a change in circumstances occurs for purposes of chapter 3 and the related grace period allowed under §1.1441–1(b)(3)(iv).

(B) *Standards of knowledge applicable to certain types of documentary evidence*—(*1*) *Financial statement.* A withholding agent that obtains a financial statement for purposes of establishing that a foreign payee meets a certain asset threshold has reason to know that the chapter 4 status claimed is unreliable or incorrect only if the total assets shown on the financial statement for the payee, and if relevant the payee's expanded affiliated group, are not within the permissible thresholds, or the footnotes to the financial statement indicate that the payee is not a foreign entity or is not a type of FFI eligible for the chapter 4 status claimed. A withholding agent that obtains a financial statement for purposes of establishing that the payee is an active NFFE will be required to review the balance sheet and income statement to determine whether the payee meets the income and asset thresholds set forth in §1.1472–1(c)(1)(iv) and the footnotes of the financial statement for an indication that the payee is not a foreign entity or is a financial institution. A withholding agent that obtains a financial statement for purposes of establishing a chapter 4 status for a payee that does not require the payee to meet an asset or income threshold will be required to review only the footnotes to the financial statement to determine whether the financial statement supports the claim of chapter 4 status. A withholding agent that is not relying upon a financial statement to establish the chapter 4 status of the payee (for example because it has other documentation that establishes the payee's chapter 4 status) is not required to independently evaluate the financial statement solely because the withholding agent also has collected the financial statement in the course of its account opening or other procedures.

(*2*) *Organizational documents.* A withholding agent that obtains organizational documents for a payee solely for the purpose of supporting the chapter 4 status claimed by the entity will only be required to review the document sufficiently to establish that the entity

is a foreign person and that the purposes for which the entity was formed and its basic activities appear to be of a type consistent with the chapter 4 status claimed, unless otherwise specified in paragraph (d) of this section. A withholding agent that obtains organizational documents for the purpose of establishing that an entity has a particular chapter 4 status will only be required to review the document to the extent needed to establish that the entity is a foreign person, that the requirements applicable to the particular chapter 4 status are met, and that the document was executed, but will not be required to review the remainder of the document.

(v) *Specific standards of knowledge applicable when only documentary evidence is a code or classification described in paragraph (c)(5)(ii)(B) of this section.* A withholding agent may not rely upon a classification described in paragraph (c)(5)(ii)(B) of this section or a standardized industry coding system to treat an entity as having a foreign status if there are U.S. indicia described in paragraph (e)(4)(v)(A) of this section associated with the entity, unless such U.S. indicia are cured in the manner set forth in paragraph (e)(4)(v)(B) of this section.

(A) through (A)(*7*) [Reserved] For further guidance, see §1.1471–3(e)(4)(v)(A) through (e)(4)(v)(A)(*7*).

(B) [Reserved] For further guidance, see §1.1471–3(e)(4)(v)(B).

(*1*) If there are U.S. indicia described in paragraphs (e)(4)(v)(A)(*1*) through (*4*) of this section associated with the entity, the withholding agent may treat the entity as a foreign person only if the withholding agent obtains a withholding certificate for the entity and one form of documentary evidence, described in paragraph (c)(5) of this section, that establishes the entity's status as a foreign person (such as a certificate of incorporation).

(*2*) If there are U.S. indicia described in paragraphs (e)(4)(v)(A)(*1*) through (*4*) of this section associated with the entity and the withholding agent is making a payment with respect to an offshore obligation, the withholding agent may also treat the entity as a foreign person if the withholding agent obtains a withholding certificate for the entity and the withholding agent treats the entity as foreign for purposes of foreign tax reporting. A withholding agent will treat an entity as foreign for purposes of foreign tax reporting only if the withholding agent classifies the entity as a resident of the country in which the obligation is maintained, the withholding agent is required to report a payment made to the entity annually on a tax information statement that is filed with the tax authority of the country in which the account is maintained as part of that country's resident reporting requirements, and that country has a tax information exchange agreement or income tax treaty in effect with the United States.

(*3*) [Reserved] For further guidance, see §1.1471–3(e)(4)(v)(B)(*3*).

(vi) [Reserved] For further guidance, see §1.1471–3(e)(4)(vi).

(A) through (A)(*2*) [Reserved] For further guidance, see §1.1471–3(e)(4)(vi)(A) through (e)(4)(vi)(A)(*2*).

(B) *Limits on reason to know with respect to documentation received from participating FFIs and registered deemed-compliant FFIs that are intermediaries or flow-through entities.* A withholding agent that receives documentation from a participating FFI or registered deemed-compliant FFI that is not the payee must apply the requirements of paragraph (e)(4)(vi)(A) of this section, except that the withholding agent may rely upon the chapter 4 status provided by the participating FFI or registered deemed-compliant FFI in the withholding statement unless the withholding agent has information that conflicts with the chapter 4 status provided. If underlying documentation is provided for the payee and information in the documentation or in the withholding agent's records conflicts with the chapter 4 status claimed, the withholding agent has reason to know that the chapter 4 status claimed is unreliable or incorrect. A withholding agent is not, however, required to verify information contained in documentation provided by an intermediary or flow-through entity that is a participating FFI or registered deemed-compliant FFI that is not facially incorrect and is not required to obtain supporting documentation for the payee in addition to a withholding certificate unless the

withholding agent obtains such documentation for purposes of chapters 3 or 61 or unless the withholding agent knows that the review conducted by the participating FFI or registered deemed-compliant FFI for purposes of chapter 4 was not adequate. For example, a withholding agent that receives a withholding statement from a participating FFI that is an intermediary stating that the payee is a registered deemed-compliant FFI is only required to determine that any withholding certificate provided for the payee contains a GIIN and that the GIIN does not appear to be facially invalid (for example, because it does not contain the correct amount of digits), but is not subject to the requirements set forth in paragraph (e)(3) of this section. Similarly, a withholding agent that receives from a participating FFI that is a partnership a withholding statement claiming that the payee is an active NFFE has reason to know that the claim is unreliable or incorrect if it receives a withholding statement that contains a U.S. address for the payee unless the partnership also provides a copy of documentation sufficient to cure the U.S. indicia in the manner set forth in paragraph (e) of this section or the withholding statement indicates that appropriate documentation sufficient to cure the U.S. indicia in the manner set forth in paragraph (e) of this section has been obtained and provides details of such documentation, such as the type of documentation and an identification number of the person contained in the document.

(vii) [Reserved] For further guidance, see §1.1471–3(e)(4)(vii).

(A) [Reserved] For further guidance, see §1.1471–3(e)(4)(vii)(A).

(B) *Reason to know there are U.S. indicia associated with preexisting obligations.* With respect to a preexisting obligation, a withholding agent may apply the limits on reason to know described in §1.1441–7(b)(3)(ii) for a person that the withholding agent has previously documented for purposes of chapters 3 or 61. A withholding agent that applies the limits on reason to know described in §1.1441–7(b)(3)(ii) must, however, review for U.S. indicia any additional documentation upon which the withholding agent is relying to determine the chapter 4 status of the person, if any.

(C) and (D) [Reserved]. For further guidance, see §1.1471–3(e)(4)(vii)(C) and (D).

(viii) [Reserved] For further guidance, see §1.1471–3(e)(4)(viii).

(A) [Reserved] For further guidance, see §1.1471–3(e)(4)(viii)(A).

(*1*) through (*3*) [Reserved] For further guidance, see §1.1471–3(e)(4)(viii)(A)(*1*) through (*3*).

(*4*) Is a spouse or unmarried child under the age of 21 years of an individual described in one of the paragraphs (e)(4)(viii)(A)(*1*) through (*3*) of this section;

(B) through (D) [Reserved] For further guidance, see §1.1471–3(e)(4)(viii)(B) through (D).

(5) through (6) [Reserved] For further guidance, see §1.1471–3(e)(5) through (6).

(f) [Reserved] For further guidance, see §1.1471–3(f).

(1) *In general.* A withholding agent that cannot, prior to the payment, reliably associate (within the meaning of paragraph (c) of this section) the payment with valid documentation may rely on the presumptions of this paragraph (f) to determine the status of the payee (or other person receiving the payment) as a U.S. or foreign person and such person's other relevant characteristics (for example, as a nonparticipating FFI). Paragraph (f)(2) of this section provides the presumption rules with respect to classification as an individual or entity. Paragraph (f)(3) of this section provides the presumption rules to determine a payee's U.S. or foreign status. Paragraph (f)(4) of this section provides the presumption rules with respect to an entity's chapter 4 status. Paragraph (f)(5) of this section provides the presumption rules with respect to an intermediary or flow-through entity. Paragraph (f)(6) of this section provides the presumption rules with respect to effectively connected income paid to a U.S. branch of a payee. Paragraph (f)(7) of this section provides the presumption rules that apply to a payment made to joint payees. Paragraph (f)(8) of this section provides rules for how a payee may rebut the presumptions described in this paragraph (f). Paragraph (f)(9) of this section provides the consequences

to a withholding agent that fails to withhold in accordance with the presumptions set forth in this paragraph (f) or that has actual knowledge or reason to know facts that are contrary to the presumptions set forth in this paragraph (f).

(2) *Presumptions of classification as an individual or entity and entity as the beneficial owner*. A withholding agent that cannot reliably associate a payment with a valid withholding certificate, or that has received valid documentary evidence (as described in paragraph (c)(5) of this section), but cannot determine a payee's status as an individual or an entity from the documentary evidence, must apply the presumption rules of §1.1441–1(b)(3)(ii) to determine the payee's classification as an individual, trust, partnership, corporation, intermediary, or flow-through entity. Additionally, a withholding agent that receives valid documentary evidence with respect to an entity must apply the rules under §1.1441–1(b)(3)(ii) to determine when it may treat such entity as a beneficial owner.

(3) *Presumptions of U.S. or foreign status*. If a withholding agent cannot reliably associate a payment with a valid withholding certificate or valid documentary evidence from which it is possible to determine the payee's U.S. or foreign status, it must apply the presumption rules of §1.1441–1(b)(3)(iii) to determine the U.S. or foreign status of the payee (substituting the term *withholdable payment* for the term *payment*). In the case of a payment that a withholding agent can reliably associate with valid documentation that indicates the payment is made to a U.S. person but does not indicate whether the person is a specified U.S. person, the payment will be presumed made to a specified U.S. person unless the withholding agent can apply the presumption rules of §1.6049–4(c)(1)(ii)(B), (C), (D), (E), (I), (J), (K), (L), or (N), to presume that the person is other than a specified U.S. person, or the person's name reasonably indicates that the person is a bank (for example because it contains the word *Bank* or a foreign equivalent).

(4) *Presumption of chapter 4 status for a foreign entity*. If a withholding agent cannot reliably associate a valid withholding certificate or valid documentary evidence sufficient to determine the chapter 4 status of the entity receiving payment under paragraph (d) of this section (for example, as a participating FFI, nonparticipating FFI, or NFFE), it must presume that the entity is a nonparticipating FFI.

(5) *Presumption of chapter 4 status of payee with respect to a payment to an intermediary or flow-through entity*. If a withholding agent makes a payment to a foreign flow-through entity or intermediary, including a payment that it is required to treat as made to such an entity under paragraphs (f)(2) and (3) of this section, and cannot reliably associate such payment with valid documentation under paragraph (c) of this section, the withholding agent must presume that the payment is made to a nonparticipating FFI.

(6) *Presumption of effectively connected income for payments to certain U.S. branches*. A withholding agent that makes a payment to a U.S. branch described in this paragraph (f)(6) may presume, in the absence of documentation indicating otherwise, that the U.S. branch is the payee of a payment that is effectively connected with the conduct of a trade or business in the United States if the withholding agent has obtained an EIN from the U.S. branch (either orally or in writing). A U.S. branch is described in this paragraph (f)(6) if it is a U.S. branch of a foreign bank subject to regulatory supervision by the Federal Reserve Board or a U.S. branch of a foreign insurance company required to file an annual statement on a form approved by the National Association of Insurance Commissioners with the Insurance Department of a State, a Territory, or the District of Columbia. A payment is treated as made to a U.S. branch of a foreign bank or foreign insurance company if the payment is credited to an account maintained in the United States in the name of a U.S. branch of the foreign person, or the payment is made to an address in the United States where the U.S. branch is located and the name of the U.S. branch appears on documents (in written or electronic form) associated with the payment (for example, the check mailed or letter addressed to the branch).

(7) *Joint payees*—(i) *In general.* If a withholding agent makes a payment to joint payees and cannot reliably associate the payment with valid documentation from each payee but all of the joint payees appear to be individuals, then the payment is presumed made to an unidentified U.S. person. If any joint payee does not appear, by its name and other information contained in the account file, to be an individual, then the entire payment will be treated as made to a nonparticipating FFI. However, if one of the joint payees provides a Form W–9 in accordance with the procedures described in §§ 31.3406(d)–1 through 31.3406(d)–5, the payment shall be treated as made to that payee.

(ii) *Exception for offshore obligations.* If a withholding agent makes a payment outside the United States with respect to an offshore obligation held by joint payees and cannot reliably associate a payment with valid documentation from each payee but all of the joint payees appear to be individuals, then the payment is presumed made to an unknown foreign individual if the payment with respect to the offshore obligation is made outside the United States (as described in § 1.6049–5(e)).

(8) *Rebuttal of presumptions.* A payee may rebut the presumptions described in paragraphs (f)(2) through (7) of this section by providing reliable documentation to the withholding agent or, if applicable, to the IRS.

(9) *Effect of reliance on presumptions and of actual knowledge or reason to know otherwise*—(i) *In general.* Except as otherwise provided in this paragraph (f)(9), a withholding agent that withholds on a payment under section 1471 or 1472 in accordance with the presumptions set forth in this paragraph (f) shall not be liable for withholding under this section even if it is later established that the payee has a chapter 4 status other than the status presumed. A withholding agent that fails to report and withhold in accordance with the presumptions described in paragraphs (f)(2) through (7) of this section with respect to a payment that it cannot reliably associate with valid documentation shall be liable for tax, interest, and penalties. See § 1.1474–1(a) for the extent of a withholding agent's liability for failing to withhold in accordance with the presumptions described in this paragraph (f).

(ii) *Actual knowledge or reason to know that amount of withholding is greater than is required under the presumptions or that reporting of the payment is required.* Notwithstanding the provisions of paragraph (f)(9)(i) of this section, a withholding agent that knows or has reason to know that the status or characteristics of the person are other than what is presumed under this paragraph (f) may not rely on the presumptions described in this paragraph (f) to the extent that, if it determined the status of the person based on such knowledge or reason to know, it would be required to withhold (under this section or another withholding provision of the Code) an amount greater than would be the case if it relied on the presumptions described in this paragraph (f). In such a case, the withholding agent must rely on its knowledge or reason to know rather than on the presumptions set forth in this paragraph (f). Failure to do so shall result in liability for tax, interest, and penalties to the extent described in § 1.1474–1(a).

(g) [Reserved] For further guidance, see § 1.1471–3(g).

(h) *Expiration date.* The applicability of this section expires on February 28, 2017.

[T.D. 9657, 79 FR 12831, Mar. 6, 2014; 79 FR 37177, July 1, 2014]

§ 1.1471–4 FFI agreement.

(a) *In general.* An FFI agreement will be in effect in accordance with section 1471(b) if an FFI registers with the IRS pursuant to procedures prescribed by the IRS and agrees to comply with the terms of an FFI agreement. The FFI agreement will incorporate the requirements set forth in this section, any modifications set forth in an applicable Model 2 IGA, and any provisions applicable to a reporting Model 1 FFI.

(1) *Withholding.* A participating FFI is required to deduct and withhold tax

with respect to payments made to recalcitrant account holders and nonparticipating FFIs to the extent required under paragraph (b) of this section. A participating FFI that is prohibited by foreign law from withholding as required under paragraph (b) of this section with respect to an account must close such account within a reasonable period of time or must otherwise block or transfer such account as described in paragraph (i) of this section.

(2) *Identification and documentation of account holders.* A participating FFI is required to obtain such information regarding each holder of each account maintained by the participating FFI to determine whether each account is a U.S. account or an account held by a recalcitrant account holder or nonparticipating FFI in accordance with the due diligence procedures for identifying and documenting account holders described in paragraph (c) of this section.

(3) [Reserved] For further guidance, see § 1.1471–4T(a)(3).

(4) *Expanded affiliated group.* Except as otherwise provided in Model 1 IGA or Model 2 IGA, in order for any FFI that is a member of an expanded affiliated group to be a participating FFI, each FFI that is a member of the expanded affiliated group must be a participating FFI or registered deemed-compliant FFI as described in paragraph (e) of this section. For a limited period described in paragraph (e)(2) or (e)(3) of this section, however, a branch of an FFI or an FFI that is a member of an expanded affiliated group and is unable under foreign law to satisfy the requirements of this section may instead obtain status as a limited branch of a participating FFI or limited FFI if the branch or FFI meets the requirements set forth in paragraph (e)(2) or (e)(3) of this section (as applicable).

(5) *Verification.* A participating FFI is required to adopt a compliance program as described in paragraph (f) of this section under the authority of the responsible officer, who will be required to certify periodically to the IRS on behalf of the FFI regarding the participating FFI's compliance with the requirements of the FFI agreement. If the IRS identifies concerns about the participating FFI's compliance, the IRS may request additional information to verify compliance with the requirements of the FFI agreement as described in paragraph (f)(4) of this section.

(6) *Event of default.* A participating FFI is required to cure an event of default with respect to the FFI agreement as defined in paragraph (g) of this section. Upon the occurrence of an event of default, the IRS will deliver to a participating FFI a notice of default and will allow the FFI an opportunity to cure the event of default as described in paragraph (g) of this section.

(7) *Refunds.* A participating FFI may file a collective refund on behalf of certain account holders and payees for amounts withheld by the participating FFI or its withholding agent under chapter 4 in excess of the account holder or payee's U.S. tax liability to the extent permitted in paragraph (h) of this section. A participating FFI may also make an adjustment for overwithholding using either the reimbursement procedure described in § 1.1474–2(a)(3) or the set-off procedure described in § 1.1474–2(a)(4).

(b) *Withholding requirements*—(1) [Reserved] For further guidance, see § 1.1471–4T(b)(1).

(2) [Reserved] For further guidance, see § 1.1471–4T(b)(2).

(3) [Reserved] For further guidance, see § 1.1471–4T(b)(3).

(i) [Reserved] For further guidance, see § 1.1471–4T(b)(3)(i).

(ii) [Reserved] For further guidance, see § 1.1471–4T(b)(3)(ii).

(iii) [Reserved] For further guidance, see § 1.1471–4T(b)(3)(iii).

(4) *Foreign passthru payments.* A participating FFI is not required to deduct and withhold tax on a foreign passthru payment made by such participating FFI to an account held by a recalcitrant account holder or to a nonparticipating FFI before the later of January 1, 2017, or the date of publication in the FEDERAL REGISTER of final regulations defining the term foreign passthru payment.

(5) *Withholding on limited FFIs and limited branches*—(i) *Limited FFIs.* A participating FFI is required to withhold on a withholdable payment made to a

limited FFI identifying itself as a nonparticipating FFI. A participating FFI that is a member of an expanded affiliated group that includes one or more limited FFIs will also be required to treat any such limited FFI as a nonparticipating FFI with respect to withholdable payments made to such limited FFI. A participating FFI will be considered to have made a withholdable payment to a limited FFI if such participating FFI receives a withholdable payment with respect to a security or instrument held on behalf of a limited FFI (or an account maintained by the limited FFI). A participating FFI will also be considered to have made a withholdable payment to a limited FFI when the limited FFI receives a payment with respect to a transaction between the limited FFI and such participating FFI that is in the same expanded affiliated group and such transaction hedges or otherwise provides total return exposure to another transaction between such participating FFI and a third party that gives rise to a withholdable payment.

(ii) *Limited branches.* A participating FFI is required to withhold on a withholdable payment made to a limited branch identifying itself as a nonparticipating FFI. A branch of the participating FFI other than the limited branch is also required to withhold on a withholdable payment when it receives the payment on behalf of a limited branch of the participating FFI. A branch of the participating FFI other than a limited branch will be considered to have received a withholdable payment on behalf of a limited branch when such other branch receives a withholdable payment with respect to a security or instrument it holds on behalf of a limited branch (or an account maintained by the limited branch). A branch of a participating FFI other than a limited branch will be considered to hold a security or instrument on behalf of a limited branch when it executes a transaction with a limited branch that hedges or otherwise provides total return exposure to another transaction between such other branch and a third party that gives rise to a withholdable payment.

(6) [Reserved] For further guidance, see § 1.1471–4T(b)(6).

(7) *Withholding requirements for U.S. branches of participating FFIs (and reporting Model 1 FFIs) that are treated as U.S. persons.* A U.S. branch of a participating FFI (and reporting Model 1 FFI) that is treated as a U.S. person and that satisfies its backup withholding obligations under section 3406(a) with respect to accounts held at the U.S. branch by account holders that are payees treated as other than exempt recipients under chapter 61 will be treated as satisfying its withholding obligation with respect to such accounts under section 1471(b)(1) and this paragraph (b). See paragraph (d)(2)(iii)(B) of this section for the special reporting requirements applicable to U.S. branches of participating FFIs (and reporting Model 1 FFIs) that are treated as U.S. persons. See paragraphs (c)(2) and (d)(4) of this section for the reporting requirements of U.S. branches of participating FFIs (and reporting Model 1 FFIs) with respect to payments that are chapter 4 reportable amounts.

(c) Due diligence for the identification and documentation of account holders and payees—(1) *Scope of paragraph.* Except to the extent that a participating FFI relies on the due diligence procedures set forth in an applicable Model 2 IGA, a participating FFI must follow this paragraph (c) to identify and document the chapter 4 status of each holder of an account maintained by the participating FFI to determine if the account is a U.S. account, non-U.S. account, or an account held by a recalcitrant account holder or nonparticipating FFI. Paragraph (c)(2) of this section provides the general rules for identification and documentation of account holders and payees, and paragraph (c)(2)(v) provides special documentation requirements for certain U.S. branches of participating FFIs. Paragraph (c)(3) of this section provides the rules for documenting entity accounts and payees. Paragraph (c)(4) of this section provides the general rules for documenting individual accounts other than preexisting accounts. Paragraph (c)(5) of this section provides the identification

and documentation procedure for preexisting individual accounts. Paragraph (c)(6) of this section provides examples illustrating the application of the documentation exceptions for entity accounts and individual accounts. Paragraph (c)(7) of this section outlines the certification requirement relating to the due diligence procedures of this paragraph (c) with respect to preexisting accounts within the specified periods of time.

(2) *General rules for the identification and documentation of account holders and payees*—(i) *Overview*. Except as otherwise provided in paragraphs (c)(3)(iii) and (c)(5)(iii) of this section (documentation exceptions for certain preexisting accounts), a participating FFI is required to identify among accounts maintained by the participating FFI each account that is a U.S. account or an account held by a recalcitrant account holder or nonparticipating FFI, and to report information about such accounts in the manner provided in paragraph (d) of this section and §1.1474–1(d)(4)(iii). See §1.1471–5(a)(3) for rules to determine the holder of an account. The participating FFI is also required to retain a record of the documentation collected or otherwise maintained that meets the requirements described in this paragraph (c) when making certain payments to an account holder or payee (if other than an account holder) to determine whether withholding applies under paragraph (b) of this section or whether reporting applies under §1.1474–1(d)(4)(iii)(C) and any payee for which it provides the certification described in §1.1471–3(c)(9)(iii)(A) to another withholding agent.

(ii) *Standards of knowledge*—(A) *In general*. A participating FFI may rely on valid documentation that is collected pursuant to the due diligence procedures set forth in this paragraph (c) or that is otherwise maintained in the participating FFI's files, unless the participating FFI knows or has reason to know that such documentation is unreliable or incorrect. For purposes of a participating FFI documenting an account holder under this paragraph (c), the requirements for the validity of withholding certificates, written statements, and documentary evidence provided in §1.1471–3(c) shall apply regardless of whether the participating FFI makes a payment to the account. Except as otherwise provided paragraph (c)(2)(ii)(B) of this section (certain mergers or bulk acquisitions) and in paragraph (c)(5)(iv) of this section (preexisting individual accounts), to determine whether a participating FFI knows or has reason to know that the documentation collected or otherwise maintained with respect to the account holder is unreliable or incorrect, the standards of knowledge provided in §1.1471–3(e) shall apply regardless of whether the participating FFI makes a payment to the account. See §1.1471–3(c)(8) and (9) for the requirement to obtain documentation on an account-by-account basis and the exceptions to this requirement.

(B) *Limits on reason to know with respect to certain accounts acquired in merger or bulk acquisition*. A participating FFI that acquires accounts of another financial institution either in a merger or bulk acquisition of accounts for value (other than a related party transaction described in §1.1471–3(c)(9)(v)) may apply the limitations on reason to know provided in paragraphs (c)(2)(ii)(B)(*1*) or (*2*) of this section (as applicable and subject to the conditions therein), or the rules of §1.1471–3(c)(9)(v) to rely upon documentation collected by another financial institution for an account acquired either in a merger or bulk acquisition of accounts for value.

(*1*) *In general*. The participating FFI may treat accounts acquired in a transaction described in this paragraph (c)(2)(ii)(B) as preexisting accounts for purposes of applying the identification and documentation procedures of this paragraph (c) by substituting the date of acquisition of such accounts for the effective date of the FFI agreement.

(*2*) *Participating FFIs and certain deemed-compliant FFIs that apply the due diligence rules, and U.S. financial institutions*. If a participating FFI (transferee FFI) acquires accounts of another participating FFI or deemed-compliant FFI (including a U.S. branch of either such FFI) that applies the due diligence requirements of this paragraph

(c) as a condition of its status (as described in §1.1471–5(f)), or of a U.S. financial institution (transferor FI), the transferee FFI may rely on the chapter 4 status determination made by the transferor FI for an account holder and will not be subject to the standards of knowledge set forth in paragraph (c)(2)(ii)(A) of this section until there is a change in circumstances with respect to the account if the following conditions are met—

(*i*) The transferee FFI does not have actual knowledge that the chapter 4 status determination provided by the transferor FI is unreliable or incorrect;

(*ii*) For the certification period following the acquisition of such accounts (described in paragraph (f)(3)(i) of this section), the transferee FFI acquiring the accounts tests a sample of the acquired accounts to determine if the chapter 4 status determinations made by the transferor FI are reliable;

(*iii*) In the case of a transferor FI that is a branch of a participating FFI or of a registered deemed-compliant FFI (other than a U.S. branch that is treated as a U.S. person) or that is a deemed-compliant FFI that applies the requisite due diligence rules of this paragraph (c) as a condition of its status, the transferor FI provides a written representation to the transferee FFI acquiring the accounts that the transferor FI has applied the due diligence procedures of this paragraph (c) with respect to the transferred accounts and, in the case of a transferor FI that is a participating FFI, has complied with the requirements of paragraph (f)(2) of this section; and

(*iv*) In the case of a transferor FI that is a U.S. financial institution or that is a U.S branch of a participating FFI or of a registered deemed-compliant FFI that is treated as a U.S. person, the transferee FFI may rely on the chapter 4 status determinations for a payee that is an entity only if prior to the date of transfer the U.S. financial institution or U.S. branch made a withholdable payment to the payee or, for a payee that is an individual, only if the U.S. financial institution or U.S. branch made a reportable payment (as defined under section 3406(b)) to the payee.

(iii) *Change in circumstances*—(A) *Obligation to identify a change in circumstances.* A participating FFI is required to institute procedures to ensure that any change in circumstances, as described in paragraph (c)(2)(iii)(B) of this section, is identified by the participating FFI, including procedures to ensure that a relationship manager identifies any change in circumstances with respect to an account. For example, if a relationship manager is notified that the account holder has a mailing address in the United States when there was no U.S. address previously associated with the account, the participating FFI will be required to treat the new address as a change in circumstances and will be required to retain a record of the appropriate documentation from the account holder as described in paragraph (c)(5)(iv)(B)(*2*)(iii) of this section.

(B) *Definition of change in circumstances.* For purposes of this section, a change in circumstances (as defined in §1.1471–3(c)(6)(ii)(E)) includes any change or addition of information to the account holder's account (including the addition, substitution, or other change of an account holder) or any change or addition of information to any account associated with such account (applying the account aggregation rules described in §1.1471–5(b)(4)(iii) or by treating the accounts as consolidated obligations) if such change or addition of information affects the chapter 4 status of the account holder. For example, if a holder of an account (including a preexisting account) opens another account that is linked to such account in the participating FFI's computerized system as described under §1.1471–5(b)(4)(iii) and as part of the participating FFI's account opening procedures the account holder provides a U.S. telephone number for such other account, this is a change in circumstances with respect to the first mentioned account. With respect to a preexisting account that meets a documentation exception described in paragraphs (c)(3)(iii) and (c)(5)(iii) of this section, a change in circumstances also includes a change in account balance or value as of the end of the first subsequent year that

causes the account no longer to meet the documentation exception.

(C) *Requirements following a change in circumstances.* With respect to an individual account or an account held by a passive NFFE for which there is a change in circumstances with respect to the information regarding its owners, following a change in circumstances the participating FFI must retain a record of the appropriate documentation described in paragraph (c)(3) or (c)(5)(iv)(B)(*2*) of this section within the time period provided by § 1.1471–5(g)(3)(iii) or, if unable to do so, must treat such account as held by a recalcitrant account holder. With respect to an account held by an entity other than a passive NFFE described in the preceding sentence, following a change in circumstances, the participating FFI must retain a record of the appropriate documentation described in paragraph (c)(3) of this section by the date that is 90 days after the change in circumstances or, if unable to do so, must treat such account as held by a nonparticipating FFI.

(iv) *Record retention.* A participating FFI must retain a record of the documentation collected (or otherwise maintained) to establish the chapter 4 status of an account holder or payee pursuant to the requirements of this paragraph (c)(2)(iv). A participating FFI will be treated as having retained a record of a withholding certificate, written statement, or documentary evidence if the participating FFI retains either an original, certified copy, or photocopy (including a microfiche, scan, or similar means of record retention) of the withholding certificate, written statement, or documentary evidence collected to determine the chapter 4 status of the account holder for six calendar years following the year in which the due diligence procedures of this paragraph (c) were performed for the account. With respect to documentary evidence for an offshore obligation, however, a participating FFI that is not required to retain copies of documentation reviewed pursuant to its AML due diligence will be treated as having retained a record of such documentation if the participating FFI retains a record in its files noting the date the documentation was reviewed, each type of document, the document's identification number (if any) (for example, passport number), and whether any U.S. indicia were identified. The previous sentence applies with respect to an offshore obligation that is also a preexisting obligation, except, in such case, the requirement to record whether the documentation contained U.S. indicia does not apply. A participating FFI must also retain a record of any searches, including search results provided by third-party credit agencies as described in paragraph (c)(4)(ii) of this section, results from electronic searches, and requests made and responses to relationship manager inquiries for six calendar years following the year in which the due diligence procedures of this paragraph (c) were performed for the account. A participating FFI may be required to extend the six year retention period if the IRS requests such extension prior to the end of the six year retention period. Notwithstanding the preceding sentences, a participating FFI must retain a record of the chapter 4 status of an account holder or payee for as long as the FFI maintains the account or obligation. See § 1.1471–3(c)(6)(iii)(A) for the record retention period applicable to a participating FFI that is a withholding agent with respect to documentation collected (or otherwise maintained) for a payee.

(v) *Special rule for U.S. branches of participating FFIs (and reporting Model 1 FFIs) that are treated as U.S. persons.* A U.S. branch of a participating FFI (and reporting Model 1 FFI) that is treated as a U.S. person shall apply, in lieu of the due diligence requirements of this paragraph (c), the due diligence requirements of § 1.1471–3 to determine the chapter 4 status of account holders and payees that are entities and shall apply the documentation requirements of chapter 3 or 61 (as applicable) with respect to individual account holders. See paragraph (b)(6) of this section for special withholding rules and paragraph (d)(2)(iii)(B) of this section for special reporting rules applicable to such U.S. branches.

(3) *Identification and documentation procedure for entity accounts and payees*—(i) *In general.* With respect to accounts held by entities, unless the documentation exception described in paragraph (c)(3)(iii) of this section applies, a participating FFI must determine if the account is a U.S. account or an account held by a recalcitrant account holder or nonparticipating FFI by applying the principles of §1.1471–3(b), (c), and (d) to establish the chapter 4 status of each account holder and each payee regardless of whether the participating FFI makes a payment to the account. If an account holder receiving a payment is not the payee of the payment under §§1.1471–3(a) and 1.1472–1(d)(3), the participating FFI is also required to establish the chapter 4 status of the payee or payees in order to determine whether withholding applies under paragraph (b) of this section.

(ii) *Timeframe for applying identification and documentation procedure for entity accounts and payees.* For preexisting entity accounts, a participating FFI must perform the requisite identification and documentation procedures within six months of the effective date of the FFI agreement for any account holder that is a prima facie FFI, as defined in §1.1471–2(a)(4)(ii)(B), and within two years of the effective date of the FFI agreement for all other entity accounts, except as otherwise provided in paragraph (c)(3)(iii) of this section. For accounts that are not preexisting accounts, the participating FFI must perform the requisite identification and documentation procedures by the earlier of the date a withholdable payment or a foreign passthru payment is made with respect to the account or within 90 days of the date the participating FFI opens the account. Notwithstanding the foregoing sentences of this paragraph (c)(3)(ii), with respect to a preexisting obligation issued in nonregistered (bearer) form by an investment entity, the investment entity is required to perform the requisite identification and documentation procedures at the time a payment is collected by the beneficial owner of the payment (including a beneficial owner that collects the payment through an intermediary or agent). If the participating FFI cannot obtain all the documentation described in §1.1471–3(d) or if the participating FFI knows or has reason to know that the documentation provided for an entity account is unreliable or incorrect (by applying the standards of knowledge applicable to entities in §1.1471–3(e) as modified by paragraph (c)(2)(ii)), the participating FFI shall apply the presumption rules of §1.1471–3(f) (as applicable to entities) to determine the chapter 4 status of the account holder. In the case of an account held by a passive NFFE that provides the documentation described in §1.1471–3(d)(12) to establish its status as a passive NFFE but fails to provide the information regarding its owners, see §1.1471–5(g)(2)(iv) for the requirement to treat the account as held by a recalcitrant account holder.

(iii) *Documentation exception for certain preexisting entity accounts*—(A) *Accounts to which this exception applies.* Unless the participating FFI elects otherwise pursuant to paragraph (c)(3)(iii)(C) of this section, a participating FFI is not required to perform the identification and documentation procedure contained in this paragraph (c)(3) with respect to a preexisting entity account the aggregate balance or value of which is $250,000 or less if no holder of such account that has previously been documented by the FFI as a U.S. person for purposes of chapter 3 or 61 is a specified U.S. person. For purposes of applying this exception, the account balance must be determined as of the effective date of the FFI agreement and the aggregation rules of paragraph (c)(3)(iii)(B) of this section shall apply. An account that meets this exception will cease to meet this exception as of the end of any subsequent calendar year in which the account balance or value exceeds $1,000,000, applying the aggregation rules of paragraph (c)(3)(iii)(B) of this section, or as of the date on which there is another change in circumstances with respect to the account or any account aggregated with the account.

(B) *Aggregation of entity accounts.* For purposes of determining the aggregate balance or value of accounts held by an entity in applying the exception in this paragraph (c)(3)(iii), an FFI is required

to aggregate the balance or value of all accounts held (in whole or in part) by the same account holder to the extent required under §1.1471–5(b)(4)(iii)(A) and (B).

(C) *Election to forgo exception.* A participating FFI may elect to forgo the exception described in this paragraph (c)(3)(iii) by applying the identification and documentation procedures provided in this paragraph (c)(3) within the time period provided by paragraph (c)(3)(ii) of this section or otherwise applying the presumption rules of §1.1471–3(f) to determine the chapter 4 status of the account holder.

(4) *Identification and documentation procedure for individual accounts other than preexisting accounts*—(i) *In general.* With respect to an individual account that is not a preexisting account or an account described under paragraph (c)(4)(iii)(B) of this section or §1.1471–5(a)(4)(i) (providing an exception to U.S. account status for certain depository accounts with an aggregate balance or value of $50,000 or less), a participating FFI must determine if the account is a U.S. account or non-U.S. account by retaining a record of certain documentation to establish the chapter 4 status of each account holder. Specifically, a participating FFI must retain a record of documentary evidence that meets the requirements of §1.1471–3(c)(5) (as applicable to individuals), the information described in paragraph (c)(4)(ii) or (c)(4)(iii)(A) of this section, or a withholding certificate to establish an account holder's status as a foreign person. Except as otherwise provided in paragraph (c)(4)(iii)(A) of this section, the participating FFI must also review all information collected in connection with the opening or maintenance of each account, including documentation collected as part of the participating FFI's account opening procedures and documentation collected for other regulatory purposes, and apply the standards of knowledge in paragraph (c)(2)(ii) of this section to determine if an account holder's claim of foreign status is unreliable or incorrect. If the participating FFI is not able to establish an account holder's status as a foreign person, the participating FFI must retain a record of either a Form W–9 or U.S. TIN (in any manner) and a valid and effective waiver described in section 1471(b)(1)(F)(i), if necessary, to establish an account holder's status as a U.S. person and to confirm that the account is a U.S. account. A participating FFI must complete the requisite identification and documentation procedures with respect to each account within the time period provided by §1.1471–5(g)(3)(ii), or, if unable to do so, it must treat such account as held by a recalcitrant account holder. The presumption rules of §1.1471–3(f) do not apply to individual account holders of a participating FFI.

(ii) *Reliance on third party for identification of individual accounts other than preexisting accounts.* A participating FFI may establish an account holder's status as a foreign person based on information provided by a third-party credit agency only if the following conditions are met—

(A) As part of the participating FFI's account opening procedures, the account holder provides a residence address outside the United States and attests in writing that the account holder is not a U.S. citizen or resident;

(B) The third-party credit agency verifies the account holder's claimed residence with at least one government data source from the jurisdiction in which the participating FFI (or branch thereof) operates or the account holder claims residence; and

(C) The participating FFI (or branch thereof) relies on the information provided by the third-party credit agency for purposes of satisfying AML due diligence with respect to the account in a FATF-compliant jurisdiction.

(iii) *Alternative identification and documentation procedure for certain cash value insurance or annuity contracts*—(A) *Group cash value insurance contracts or group annuity contracts.* A participating FFI may treat an account that is a group cash value insurance contract or group annuity contract and that meets the requirements of this paragraph (c)(4)(iii)(A) as a non-U.S. account until the date on which an amount is payable to an employee/certificate holder or beneficiary, if the participating FFI obtains a certification from an employer that no employee/certificate holder (account holder) is a U.S.

person. A participating FFI is also not required to review all the account information collected by the FFI to determine if an account holder's claim of foreign status is unreliable or incorrect. An account that is a group cash value insurance contract or group annuity contract meets the requirements of this paragraph (c)(4)(iii)(A) if—

(*1*) The group life insurance contract or a group annuity contract issued to an employer and covers twenty-five or more employee/certificate holders;

(*2*) The employee/certificate holders are entitled to receive any contract value and to name beneficiaries for the benefit payable upon the employee's death; and

(*3*) The aggregate amount payable to any employee/certificate holder or beneficiary does not exceed $1,000,000.

(B) *Accounts held by beneficiaries of a cash value insurance contract that is a life insurance contract.* A participating FFI may presume that an individual beneficiary (other than the owner) of a cash value insurance contract that is a life insurance contract (account holder) receiving a death benefit is a foreign person and treat such account as a non-U.S. account unless the participating FFI has actual knowledge or reason to know that the beneficiary is a U.S. person. A participating FFI has reason to know that a beneficiary of a cash value insurance contract is a U.S. person if the information collected by the participating FFI and associated with the beneficiary contains U.S. indicia as described in paragraph (c)(5)(iv)(B)(*1*) of this section. If a participating FFI has actual knowledge or reason to know that the beneficiary is a U.S. person, the participating FFI must retain a record of the appropriate documentation described in paragraph (c)(5)(iv)(B)(*2*) of this section.

(5) *Identification and documentation procedure for preexisting individual accounts*—(i) *In general.* With respect to a preexisting individual account, unless the account is an account described in § 1.1471–5(a)(4)(i) (providing exception to U.S. account status for certain depository accounts with an aggregate balance or value of $50,000 or less), a participating FFI may follow the identification and documentation procedures described below in paragraph (c)(5)(ii) through (iv) of this section (as applicable), in lieu of the identification and documentation procedures described in paragraph (c)(4) of this section, to determine if an account that is a preexisting account is a U.S. account, non-U.S. account, or account held by a recalcitrant account holder. A participating FFI must first determine whether there are any U.S. indicia associated with the account (as defined in paragraph (c)(5)(iv)(B)(*1*) of this section), and second, if there are U.S. indicia associated with the account, retain a record of the documentation described in paragraph (c)(5)(iv)(B)(*2*) of this section to establish the account holder's chapter 4 status. For this purpose, the presumption rules of § 1.1471–3(f) do not apply. A participating FFI must complete the requisite identification and documentation procedures with respect to each account within the time period provided by § 1.1471–5(g)(3)(i) or (ii) (as applicable) or, if unable to do so, must treat such account as held by a recalcitrant account holder. A participating FFI may continue to treat an account with no U.S. indicia or an account that meets a documentation exception described in paragraph (c)(5)(iii) of this section or § 1.1471–5(a)(4)(i) (providing exception to U.S. account status for certain depository accounts with an aggregate balance or value of $50,000 or less) as a non-U.S. account, until there is a change in circumstances with respect to the account as described in paragraph (c)(2)(iii) of this section.

(ii) *Special rule for preexisting individual accounts previously documented as U.S. accounts for purposes of chapter 3 or 61.* If a participating FFI has documented an individual account holder as a U.S. person for purposes of chapter 3 or 61 and such account holder is a specified U.S. person, the account holder's account will be treated as a U.S. account for chapter 4 purposes and the identification and documentation procedures in paragraph (c)(5)(i) and (iv) of this section will not apply.

(iii) *Exceptions for certain low value preexisting individual accounts*—(A) *Accounts to which an exception applies.* Unless the participating FFI elects otherwise pursuant to paragraph (c)(5)(iii)(C) of this section, a participating FFI is

not required to perform requisite identification and documentation procedures described in paragraph (c)(5)(i) and (iv) of this section with respect to either a preexisting individual account, other than a cash value insurance or annuity contract, the aggregate balance or value of which is $50,000 or less, or a preexisting individual account that is a cash value insurance or annuity contract described in §1.1471–5(b)(1)(iv) the aggregate balance or value of which is $250,000 or less. For purposes of applying these exceptions, the account balance must be determined as of the effective date of the FFI agreement and the aggregation rules of paragraph (c)(5)(iii)(B) of this section shall apply. An account that meets either of these exceptions will cease to meet these exceptions as of the end of any subsequent calendar year in which the account balance or value exceeds $1,000,000, applying the aggregation rules of paragraph (c)(3)(iii)(B) of this section, or until there is another change in circumstances with respect to the account or any account aggregated with the account.

(B) *Aggregation of accounts*. For purposes of determining the aggregate balance or value of a preexisting individual account, other than an account that is cash value insurance or annuity contract, an FFI is required to aggregate the balance or value of all accounts that are not cash value insurance or annuity contracts to the extent required under §1.1471–5(b)(4)(iii)(A) or (B). For purposes of determining the aggregate balance or value of preexisting individual account that is a cash value insurance or annuity contract, an FFI will be required to aggregate the balance or value of all accounts that are cash value insurance or annuity contracts to the extent required under §1.1471–5(b)(4)(iii)(A) or (B).

(C) *Election to forgo exception*. A participating FFI may elect to forgo the exceptions described in paragraph (c)(5)(iii) of this section by applying the identification and documentation procedures provided in this paragraph (c) within the time provided by paragraph (c)(5)(i) of this section or otherwise treating the account as held by a recalcitrant account holder pursuant to §1.1471–5(g).

(iv) *Specific identification and documentation procedures for preexisting individual accounts*—(A) *In general*. A participating FFI applying the identification and documentation procedures of this paragraph (c)(5)(iv) must review its preexisting individual accounts (applying the electronic search described in paragraph (c)(5)(iv)(C) of this section and, if appropriate, the enhanced review for high-value accounts described in paragraph (c)(5)(iv)(D) of this section) to determine if there are any U.S. indicia (as described in paragraph (c)(5)(iv)(B)(*1*) of this section) associated with the account. If no U.S. indicia are identified with respect to an account, the participating FFI may treat the account as a non-U.S. account. If U.S. indicia are identified with respect to an account, the participating FFI must retain a record of the appropriate documentation described in paragraph (c)(5)(iv)(B)(*2*) of this section to establish the account holder's status as a foreign person. A participating FFI that follows the procedures described in this paragraph (c)(5)(iv) (as applicable) with respect to its preexisting individual accounts will not be treated as having reason to know that the determination made with respect to the account was unreliable or incorrect because of information contained in any account files that the participating FFI did not review and was not required to review under the applicable identification procedure. Thus, for example, if a participating FFI was only required to perform an electronic search with respect to a preexisting individual account and no U.S. indicia were identified in the results of the electronic search, the participating FFI would not have reason to know that the individual account holder was a U.S. person, even if the participating FFI had on file (but was not required to and did not review) a copy of the individual's passport that indicates that the individual was born in the United States.

(B) *U.S. indicia and relevant documentation rules*—(*1*) *U.S. indicia*. A participating FFI must review an account holder's account information to the extent required under paragraphs

(c)(5)(iv)(C) and (D) of this section for any of the following U.S. indicia:

(*i*) Designation of the account holder as a U.S. citizen or resident;

(*ii*) A U.S. place of birth;

(*iii*) A current U.S. residence address or U.S. mailing address (including a U.S. post office box);

(*iv*) A current U.S. telephone number (regardless of whether such number is the only telephone number associated with the account holder);

(*v*) Standing instructions to pay amounts from the account to an account maintained in the United States;

(*vi*) A current power of attorney or signatory authority granted to a person with a U.S. address; or

(*vii*) An ''in-care-of'' address or a ''hold mail'' address that is the sole address the FFI has identified for the account holder.

(*2*) *Documentation to be retained upon identifying U.S. indicia.* If U.S. indicia are identified with respect to an account holder's account information, a participating FFI must retain a record of the documentation described in paragraphs (c)(5)(iv)(B)(*2*)(*i*) through (*vii*) of this section, applicable to the U.S. indicia identified, to establish the account holder's status as a foreign person. If the participating FFI cannot establish an account holder's status as a foreign person based on such documentation, the participating FFI must retain a record of a Form W–9 and a valid and effective waiver as described in section 1471(b)(1)(F)(ii), if necessary, to confirm that the account is a U.S. account or, if unable to do so, must treat the account as held by a recalcitrant account holder.

(*i*) *Designation of account holder as a U.S. citizen or resident.* If the information required to be reviewed with respect to the account contains a designation of an account holder as a U.S. citizen or resident, the participating FFI must retain a record of a withholding certificate and documentary evidence described in §1.1471–3(c)(5)(i)(B) evidencing citizenship in a country other than the United States in order to establish the account holder's status as a foreign person.

(*ii*) *Unambiguous indication of a U.S. place of birth.* If information required to be reviewed with respect to the account unambiguously indicates a U.S. place of birth for an account holder, the participating FFI must retain a record of a form of documentary evidence described in §1.1471–3(c)(5)(i)(B) evidencing citizenship in a country other than the United States and a copy of the individual's Certificate of Loss of Nationality of the United States, or, alternatively, a withholding certificate, a form of documentary evidence described in §1.1471–3(c)(5)(i)(B) evidencing citizenship in a country other than the United States, and a reasonable written explanation of the account holder's renunciation of U.S. citizenship or the reason the account holder did not obtain U.S. citizenship at birth in order to establish the account holder's status as a foreign person.

(*iii*) *U.S. address or U.S. mailing address.* If information required to be reviewed with respect to the account contains a U.S. address or a U.S. mailing address for an account holder, the participating FFI must retain a record of a withholding certificate and a form of documentary evidence described in §1.1471–3(c)(5)(i)(A) through (C) in order to establish the account holder's status as a foreign person.

(*iv*) *Only U.S. telephone numbers.* If information required to be reviewed with respect to the account contains one or more telephone numbers in the United States and no other telephone numbers for an account holder, the participating FFI must retain a record of a withholding certificate and a form of documentary evidence described in §1.1471–3(c)(5)(i)(A) through (C) in order to establish the account holder's status as a foreign person.

(*v*) *U.S. telephone numbers and non-U.S. telephone numbers.* If information required to be reviewed with respect to the account contains one or more telephone numbers in the United States and at least one telephone number outside the United States for an account holder, the participating FFI must retain a record of a withholding certificate or a form of documentary evidence described in §1.1471–3(c)(5)(i)(A) through (C) in order to establish the account holder's status as a foreign person.

(*vi*) [Reserved] For further guidance, see § 1.1471–4T(c)(5)(iv)(B)(*2*)(*vi*).

(*vii*) *Power of attorney or signatory authority granted to a person with a U.S. address or ''in-care-of'' address or ''hold mail'' address.* If information required to be reviewed with respect to the account includes a power of attorney or signatory authority granted to a person with a U.S. address or contains an ''in-care-of'' address or ''hold mail'' address that is the sole address identified for the account holder, the participating FFI must retain a record of either a withholding certificate or a form of documentary evidence described in § 1.1471–3(c)(5)(i)(A) through (C) in order to establish the account holder's status as a foreign person.

(C) *Electronic search for identifying U.S. indicia.* Except as provided in paragraph (c)(5)(iv)(D) of this section relating to the enhanced review for high-value accounts, a participating FFI may rely solely on a review of the electronically searchable information associated with an account and maintained by the participating FFI to determine if there are any of the U.S. indicia described in paragraph (c)(5)(iv)(B)(*1*) of this section associated with the account. For purposes of this paragraph (c)(5)(iv)(C), however, an FFI will not be required to treat as U.S. indicia an in-care-of address or a hold mail address that is the sole address identified for the account holder.

(D) *Enhanced review for identifying U.S. indicia in the case of certain high-value accounts*—(*1*) *In general.* With respect to preexisting individual accounts that have a balance or value that exceeds $1,000,000 as of the effective date of the FFI agreement, or at the end of any subsequent calendar year (''high-value accounts''), a participating FFI must apply the enhanced review described in this paragraph (c)(5)(iv)(D) in addition to the electronic search described in paragraph (c)(5)(iv)(C) of this section to identify any U.S. indicia described in paragraph (c)(5)(iv)(B)(*1*) of this section associated with the account. For purposes of determining the balance or value of an account, a participating FFI must apply the aggregation rules § 1.1471–5(b)(4)(iii)(A) and (B). If a participating FFI applied the enhanced review described in this paragraph (c)(5)(iv)(D) to an account in a previous year, the participating FFI will not be required to reapply such procedures to such account in a subsequent year.

(*2*) *Relationship manager inquiry.* With respect to all high-value accounts, a participating FFI must identify accounts to which a relationship manager is assigned (including any accounts aggregated with such account) and for which the relationship manager has actual knowledge that the account holder is a U.S. citizen or resident.

(*3*) *Additional review of non-electronic records.* Except as provided in paragraph (c)(5)(iv)(E) of this section, and except with respect to any account for which the participating FFI has retained a record of a withholding certificate and documentary evidence described in § 1.1471–3(c)(5) establishing the account holder's foreign status, a participating FFI must review to identify any U.S. indicia the current customer master file of a high-value account and, if not contained in the current customer master file, the following documents described in paragraphs (c)(5)(iv)(D)(*3*)(*i*) through (*v*) of this section that are associated with such an account and were obtained by the participating FFI within the five calendar years preceding the later of the effective date of the FFI agreement, or the end of the calendar year in which the account exceeded the $1,000,000 threshold described in paragraph (c)(5)(iv)(D)(*1*) of this section. The documents to be reviewed by the participating FFI if not contained in the current customer master file are—

(*i*) The most recent withholding certificate, written statement, and documentary evidence;

(*ii*) The most recent account opening contract or documentation;

(*iii*) The most recent documentation obtained by the participating FFI for purposes of AML due diligence or for other regulatory purposes;

(*iv*) Any power of attorney or signature authority forms currently in effect; and

(*v*) Any standing instructions to pay amounts to another account.

(*4*) *Limitations on the enhanced review in the case of comprehensive electronically searchable information*. A participating FFI is not required to apply the enhanced review of paragraph (c)(5)(iv)(D)(*3*) and may instead rely on the electronic search described in paragraph (c)(5)(iv)(C) of this section to identify U.S. indicia to the extent the following information is available in the FFI's electronically searchable information—

(*i*) The account holder's nationality and/or residence status;

(*ii*) The account holder's current residence address and mailing address;

(*iii*) The account holder's current telephone number(s);

(*iv*) Whether there are standing instructions to pay amounts to another account;

(*v*) Whether there is a current ''in-care-of'' address or ''hold mail'' address for the account holder if no other residence or mailing address is found for the account; and

(*vi*) Whether there is any power of attorney or signatory authority for the account.

(E) [Reserved] For further guidance, see § 1.1471–4T(c)(5)(iv)(E).

(6) *Examples*. The following examples illustrate the documentation exceptions provided in paragraphs (c)(3)(iii) and (c)(5)(iii) of this section:

Example 1. Aggregation rules applicable to preexisting individual accounts. U, a U.S. resident individual, holds 100 shares of common stock of FFI1, an investment entity. On the effective date of FFI1's FFI agreement, the common stock held by U is worth $45,000. U also holds shares of preferred stock of FFI1. On the effective date of FFI1's FFI agreement, U's preferred stock in FFI1 is worth $35,000. Neither FFI1's common stock nor FFI1's preferred stock is regularly traded on an established securities market. U also holds debt instruments issued by FFI1 that are not regularly traded on an established securities market. On the effective date of FFI1's FFI agreement, U's FFI1 debt instruments are worth $15,000. U's common and preferred equity interests are associated with U and with one another by reference to U's foreign tax identification number in FFI1's computerized information management system. However, U's debt instruments are not associated with U's equity interests in FFI1's computerized information management system. None of these accounts are managed by a relationship manager. Previously, FFI1 was not required to and did not obtain a Form W–9 from U for purposes of chapter 3 or 61. U's FFI1 debt interests are eligible for the paragraph (c)(5)(iii)(A) documentation exception because that account does not exceed the $50,000 threshold described in paragraph (c)(5)(iii)(A)(*1*) of this section, taking into account the aggregation rule described in paragraph (c)(5)(iii)(A)(*2*) of this section. However, U's common and preferred equity interests are not eligible for the paragraph (c)(5)(iii)(A) documentation exception because the accounts exceed the $50,000 threshold described in paragraph (c)(5)(iii)(A)(*1*) of this section, taking into account the aggregation rules described in § 1.1471–5(b)(4)(iii) pursuant to the requirements of paragraph (c)(5)(iii)(A)(*2*) of this section.

Example 2. Aggregation rules for owners of entity accounts. In Year 1, U, a U.S. resident individual, maintains a depository account that is a preexisting account in CB, a commercial bank. The balance in U's depository account on the effective date of CB's FFI agreement is $20,000. U also owns 100% of Entity X, which maintains a depository account that is a preexisting account in CB, and 50% of Entity Y, which maintains a depository account that is a preexisting account in CB. The balance in Entity X's account on the effective date of CB's FFI agreement is $130,000, and the balance in Entity Y's account on the effective date of CB's FFI agreement is $110,000. All three accounts are associated with one another in CB's computerized information management system by reference to U's foreign tax identification number. None of the accounts are managed by a relationship manager. Previously, CB was not required to and did not obtain a Form W–9 from U for purposes of chapter 3 or 61. U's depository account qualifies for the § 1.1471–5(a)(4)(i) exception to U.S. account status because it does not exceed the $50,000 threshold, taking into account the aggregation rule described in § 1.1471–5(a)(4)(iii)(A). Entity X's account and Entity Y's account both qualify for the paragraph (c)(3)(iii) documentation exception because the accounts do not exceed the $250,000 threshold described in paragraph (c)(3)(iii)(B)(*1*) of this section taking into account the aggregation rules described in § 1.1471–5(b)(*4*)(*iii*) pursuant to the requirements of paragraph (c)(3)(iii)(B)(*2*) of this section.

(7) *Certifications of responsible officer*. In order for a participating FFI to comply with the requirements of an FFI agreement with respect to its identification procedures for preexisting accounts, a responsible officer of the participating FFI must certify to the IRS regarding the participating FFIs

compliance with the diligence requirements of this paragraph (c). Such certification must be made no later than 60 days following the date that is two years after the effective date of the FFI agreement. The responsible officer must certify that the participating FFI has completed the review of all high-value accounts as required under paragraphs (c)(5)(iv)(D) and (E) of this section and treats any account holder of an account for which the participating FFI has not retained a record of any required documentation as a recalcitrant account holder as required under this section and § 1.1471–5(g). The responsible officer must also certify that the participating FFI has completed the account identification procedures and documentation requirements of this paragraph (c) for all other preexisting accounts or, if it has not retained a record of the documentation required under this paragraph (c) with respect to an account, treats such account in accordance with the requirements of this section and § 1.1471–5(g). The responsible officer must also certify that the participating FFI has completed the account identification procedures and documentation requirements of this paragraph (c) for all other preexisting accounts or, if it has not retained a record of the documentation required under this paragraph (c) with respect to an account, treats such account in accordance with the requirements of this section and § 1.1471–5(g) or § 1.1471–3(f) (as applicable). A reasonable inquiry for purposes of this paragraph (c)(7) is a review of the participating FFI's procedures and a written inquiry, such as email requests to relevant lines of business, that requires responses from relevant customer on-boarding and management personnel as to whether they engaged in any such practices during that period. Practices or procedures that assist account holders in the avoidance of chapter 4 include, for example, suggesting that account holders split up accounts to avoid classification as a high-value account; suggesting that account holders of U.S. accounts close, transfer, or withdraw from their account to avoid reporting; intentional failures to disclose a known U.S. account; suggesting that an account holder remove U.S. indicia from its account information; or facilitating the manipulation of account balances or values to avoid thresholds. If the responsible officer is unable to make any of the certifications described in this paragraph (c)(7), the responsible officer must make a qualified certification to the IRS stating that such certification cannot be made and that corrective actions will be taken by the responsible officer.

(d) *Account reporting*—(1) [Reserved] For further guidance, see § 1.1471–4T(d)(1).

(2) *Reporting requirements in general*—(i) [Reserved] For further guidance, see § 1.1471–4T(d)(2)(i).

(ii) *Financial institution required to report an account*—(A) [Reserved] For further guidance, see § 1.1471–4T(d)(2)(ii)(A).

(B) *Special reporting of account holders of territory financial institutions.* In the case of an account held by a territory financial institution acting as an intermediary with respect to a withholdable payment—

(*1*) If the territory financial institution agrees to be treated as a U.S. person with respect to the payment under § 1.1471–3(c)(3)(iii)(F), a participating FFI is not required to report under paragraph (d)(2)(i) of this section with respect to the account holders of the territory financial institution; or

(*2*) [Reserved] For further guidance, see § 1.1471–4T(d)(2)(ii)(B)(*2*).

(C) *Special reporting of account holders of a sponsored FFI.* A sponsoring entity that has agreed to fulfill the reporting responsibilities of this paragraph (d) on behalf of a sponsored FFI shall report in accordance with the requirements of paragraph (d)(2)(iii), (3), or (5) of this section (as applicable) with respect to each U.S. account and paragraph (d)(6) of this section with respect to each account held by a recalcitrant account holder of the sponsored FFI to the extent and in the manner required if such sponsored FFI were a participating FFI. The sponsoring entity shall identify each sponsored FFI for which it is reporting to the extent required on the forms for reporting U.S. accounts and recalcitrant account holders and the

accompanying instructions to the forms.

(D) *Special reporting of accounts held by owner-documented FFIs.* A participating FFI that maintains an account held by an FFI that it has agreed to treat as an owner-documented FFI under § 1.1471–3(d)(6) shall report the information described in paragraph (d)(3)(iv) or (d)(5)(iii) of this section with respect to each specified U.S. person identified in § 1.1471–3(d)(6)(iv)(A)(*1*). See § 1.1474–1(i) for the reporting obligations of a participating FFI with respect to a payee of an obligation other than an account that it has agreed to treat as an owner-documented FFI.

(E) [Reserved] For further guidance, see § 1.1471–4T(d)(2)(ii)(E).

(F) [Reserved] For further guidance, see § 1.1471–4T(d)(2)(ii)(F).

(iii) *Special U.S. account reporting rules for U.S. payors*—

(A) [Reserved] For further guidance, see § 1.1471–4T(d)(2)(iii)(A).

(B) [Reserved] For further guidance, see § 1.1471–4T(d)(2)(iii)(B).

(*1*) Chapter 61 with respect to account holders that are U.S. non-exempt recipients;

(*2*) Chapter 61 with respect to persons subject to withholding under section 3406;

(*3*) Section 1.1474–1(i) with respect to substantial U.S. owners of NFFEs that are not excepted NFFEs as defined in § 1.1472–1(c) and;

(*4*) Section 1.1474–1(i) with respect to specified U.S. persons identified in § 1.1471–3(d)(6)(iv)(A)(*1*) and (*2*) of owner-documented FFIs.

(C) [Reserved] For further guidance, see § 1.1471–4T(d)(2)(iii)(C).

(3) *Reporting of accounts under section 1471(c)(1)*—(i) *In general.* The participating FFI (or branch thereof) that is responsible for reporting an account that it is required to treat as a U.S. account or accounts held by owner-documented FFIs under paragraph (d)(2)(ii) of this section shall be required to report such account under this paragraph (d)(3) for each calendar year unless it elects to report its U.S. accounts or accounts held by owner-documented FFIs under paragraph (d)(5) of this section.

(ii) *Accounts held by specified U.S. persons.* In the case of an account described in paragraph (d)(3)(i) of this section that is held by one or more specified U.S. persons, a participating FFI is required to report the following information under this paragraph (d)(3)—

(A) The name, address, and TIN of each account holder that is a specified U.S. person;

(B) The account number;

(C) The account balance or value of the account;

(D) The payments made with respect to the account, as described in paragraph (d)(4)(iv) of this section, during the calendar year; and

(E) [Reserved] For further guidance, see § 1.1471–4T(d)(3)(ii)(E).

(iii) *Accounts held by U.S. owned foreign entities.* With respect to each U.S. account described in paragraph (d)(3)(i) of this section that is held by an NFFE that is a U.S. owned foreign entity, a participating FFI is required to report under this paragraph (d)(3)(iii)—

(A) The name of the U.S. owned foreign entity that is the account holder;

(B) The name, address, and TIN of each substantial U.S. owner of such entity;

(C) The account number;

(D) The account balance or value of the account held by the NFFE;

(E) The payments made with respect to the account, as described in paragraph (d)(4)(iv) of this section, during the calendar year; and

(F) [Reserved] For further guidance, see § 1.1471–4T(d)(3)(iii)(F).

(iv) *Special reporting of accounts held by owner-documented FFIs.* With respect to each account held by an owner-documented FFI, a participating FFI is required to report under this paragraph (d)(3)(iv)—

(A) The name of the owner-documented FFI;

(B) The name, address, and TIN of each specified U.S. person identified in § 1.1471–3(d)(6)(iv)(A)(*1*) and (*2*);

(C) The account number of the account held by the owner-documented FFI;

(D) The account balance or value of the account held by the owner-documented FFI;

(E) The payments made with respect to the account held by the owner-documented FFI, as described in paragraph

(d)(4)(iv) of this section, during the calendar year; and

(F) Such other information as is otherwise required to be reported under this paragraph (d)(3) or in the form described in paragraph (d)(3)(vi) of this section and its accompanying instructions.

(v) *Form for reporting accounts under section 1471(c)(1).* The information described in paragraphs (d)(3)(ii) through (iv) of this section shall be reported on Form 8966, ''FATCA Report,'' (or such other form as the IRS may prescribe) with respect to each account subject to reporting under paragraph (d)(3)(i) of this section maintained at any time during the calendar year. This form shall be filed in accordance with its requirements and its accompanying instructions.

(vi) *Time and manner of filing.* Except as provided in paragraph (d)(7)(iv)(B) of this section, Form 8966 shall be filed electronically with the IRS on or before March 31 of the year following the end of the calendar year to which the form relates. See the accompanying instructions to this form for electronic filing instructions.

(vii) *Extensions in filing.* The IRS shall grant an automatic 90-day extension of time in which to file Form 8966. Form 8809, ''Request for Extension of Time to File Information Returns,'' (or such other form as the IRS may prescribe) must be used to request such extension of time and must be filed no later than the due date of Form 8966. Under certain hardship conditions, the IRS may grant an additional 90-day extension. A request for extension due to hardship must contain a statement of the reasons for requesting the extension and such other information as the forms or instructions may require.

(4) *Descriptions applicable to reporting requirements of § 1.1471–4(d)(3)*—(i) *Address.* The address to be reported with respect to an account held by a specified U.S. person is the residence address recorded by the participating FFI for the account holder or, if no residence address is associated with the account holder, the address for the account used for mailing or for other purposes by the participating FFI. In the case of an account held by a U.S. owned foreign entity, the address to be reported is the address of each substantial U.S. owner of such entity. In the case of an account held by an owner-documented FFI, the address to be reported is the address of each specified U.S. person identified in § 1.1471–3(d)(6)(iv)(A)(*1*) and (*2*).

(ii) *Account number.* The account number to be reported with respect to an account is the identifying number assigned by the participating FFI for purposes other than to satisfy the reporting requirements of this paragraph (d), or, if no such number is assigned to the account, a unique serial number or other number such participating FFI assigns to the financial account for purposes of reporting under paragraph (d)(3) of this section that distinguishes the account from other accounts maintained by such institution.

(iii) *Account balance or value*—(A) *In general.* The participating FFI shall report the average balance or value of the account if the FFI reports average balance or value to the account holder for a calendar year. If the participating FFI does not report the average balance or value of the account to the account holder, the participating FFI shall report the balance or value of the account as of the end of the calendar year as determined in accordance with § 1.1471–5(b)(4). In the case of an account that is a cash value insurance or annuity contract, a participating FFI shall report the balance or value of the account as determined in accordance with § 1.1471–5(b)(4).

(B) *Currency translation of account balance or value.* The account balance or value of an account may be reported in U.S. dollars or in the currency in which the account is denominated. In the case of an account denominated in one or more foreign currencies, the participating FFI may elect to report the account balance or value in a currency in which the account is denominated and is required to identify the currency in which the account is reported. If the participating FFI elects to report such an account in U.S. dollars, the participating FFI must calculate the account balance or value of the account in the manner described in § 1.1471–5(b)(4).

(iv) *Payments made with respect to an account*—(A) *Depository accounts.* The

payments made during a calendar year with respect to a depository account consist of the aggregate gross amount of interest paid or credited to the account during the year.

(B) *Custodial accounts.* The payments made during a calendar year with respect to a custodial account consist of—

(*1*) The aggregate gross amount of dividends paid or credited to the account during the calendar year;

(*2*) The aggregate gross amount of interest paid or credited to the account during the calendar year;

(*3*) The gross proceeds from the sale or redemption of property paid or credited to the account during the calendar year with respect to which the FFI acted as a custodian, broker, nominee, or otherwise as an agent for the account holder; and

(*4*) The aggregate gross amount of all other income paid or credited to the account during the calendar year.

(C) *Other accounts.* In the case of an account described in § 1.1471–5(b)(1)(iii) (relating to debt or equity interests) or (iv) (relating to cash value insurance contracts and annuity contracts), the payments made during the calendar year with respect to such account are the gross amounts paid or credited to the account holder during the calendar year including payments in redemption (in whole or part) of the account.

(D) *Transfers and closings of deposit, custodial, insurance, and annuity financial accounts.* In the case of an account closed or transferred in its entirety by an account holder during a calendar year that is a depository account, custodial account, or a cash value insurance contract or annuity contract, the payments made with respect to the account shall be—

(*1*) The payments and income paid or credited to the account that are described in paragraph (d)(4)(iv)(A) or (B) of this section for the calendar year until the date of transfer or closure; and

(*2*) The amount or value withdrawn or transferred from the account in connection with the closure or transfer of the account.

(E) *Amount and character of payments subject to reporting.* For purposes of reporting under paragraph (d)(3) of this section, the amount and character of payments made with respect to an account may be determined under the same principles that the participating FFI uses to report information on its resident account holders to the tax administration of the jurisdiction in which the FFI (or branch thereof) is located. Thus, the amount and character of items of income described in paragraphs (d)(4)(iv)(A), (B), and (C) need not be determined in accordance with U.S. federal income tax principles. If any of the types of payments described in paragraph (d)(4)(iv) of this section are not reported to the tax administration of the jurisdiction in which the participating FFI (or branch thereof) is located, such amounts may be determined in the same manner as is used by the participating FFI for purposes of reporting to the account holder. If any of the types of payments described in this paragraph (d)(4)(iv) is neither reported to the tax administration of the jurisdiction in which the FFI (or branch thereof) is located nor reported to the account holder for the year for which reporting is required under paragraph (d) of this section, such item must be determined and reported either in accordance with U.S. federal tax principles or in accordance with any reasonable method of reporting that is consistent with the accounting principles generally applied by the participating FFI. Once a participating FFI (or branch thereof) has applied a method to determine such amounts, it must apply such method consistently for all account holders and for all subsequent years unless the Commissioner consents to a change in such method. Consent will be automatically granted for a change to rely on U.S. federal income tax principles to determine such amounts.

(F) *Currency translation.* A payment described in this paragraph (d)(4)(iv) may be reported in the currency in which the payment is denominated or in U.S. dollars. In the case of payments denominated in one or more foreign currencies, a participating FFI may elect to report the payments in a currency in which payments are denominated and is required to identify the currency in which the account is reported. If such a payment is reported in

U.S. dollars, the participating FFI must calculate the amount in the manner described in § 1.1471–5(b)(4).

(v) *Record retention requirements.* A participating FFI that produces, in the ordinary course of its business, account statements that summarize the activity (including withdrawals, transfers, and closures) of an account for any calendar year in which the account was required to be reported under paragraph (d)(3) of this section must retain a record of such account statements. The record must be retained for the longer of six years or the retention period under the FFI's normal business procedures. A participating FFI may be required to extend the six year retention period if the IRS requests such an extension prior to the expiration of the six year period.

(5) *Election to perform chapter 61 reporting*—(i) *In general*—(A) *Election under section 1471(c)(2).* Except as otherwise provided in this paragraph (d)(5), a participating FFI may elect under section 1471(c)(2) and this paragraph (d)(5) to report under sections 6041, 6042, 6045, and 6049, as appropriate, with respect to any account required to be reported under this paragraph (d). Such reporting must be done as if such participating FFI were a U.S. payor and each holder of an account that is a specified U.S. person, U.S. owned foreign entity, or owner-documented FFI were a payee who is an individual and citizen of the United States. If a participating FFI makes such an election, the FFI is required to report the information required under this paragraph (d)(5) with respect to each such U.S. account or account held by an owner-documented FFI, regardless of whether the account holder of such account qualifies as a recipient exempt from reporting by a payor or middleman under sections 6041, 6042, 6045, or 6049, including the reporting of payments made to such account of amounts that are subject to reporting under any of these sections. A participating FFI that elects to report an account under the election described in this paragraph (d)(5) is required to report the information described in paragraph (d)(5)(ii) or (iii) of this section for a calendar year regardless of whether a reportable payment was made to the U.S. account during the calendar year. A participating FFI that reports an account under the election described in this paragraph (d)(5) is not required to report the information described in paragraph (d)(3) of this section with respect to the account. The election under section 1471(c)(2) described in this paragraph (d)(5)(i)(A) does not apply to cash value insurance contracts or annuity contracts that are financial accounts described in § 1.1471–5(b)(1)(iv). See paragraph (d)(5)(i)(B) of this section for an election to report cash value insurance contracts or annuity contracts that are U.S. accounts held by specified U.S. persons in a manner similar to section 6047(d).

(B) *Election to report in a manner similar to section 6047(d).* Except as otherwise provided in this paragraph (d)(5), a participating FFI may elect to report with respect to any of its cash value insurance contracts or annuity contracts that are U.S. accounts held by specified U.S. persons under section 6047(d), modified as follows. The amount to be reported is the sum of the account balance or value (as of the calendar year end or the most recent contract anniversary date) and any amount paid under the contract during such reporting period as if such participating FFI were a U.S. payor. Each holder of a U.S. account that is a specified U.S. person is treated for purposes of reporting under this paragraph (d)(5)(i)(B) as a contract holder or payee who is an individual and citizen of the United States.

(ii) *Additional information to be reported.* In addition to the information otherwise required to be reported under sections 6041, 6042, 6045, 6047(d) (in the manner described in paragraph (d)(5)(i)(B) of this section with respect to U.S. accounts held by specified U.S. persons), and 6049, including the reporting of payments made to such accounts subject to reporting under the applicable section, a participating FFI that elects to report under this paragraph (d)(5)(ii) must report with respect to each account that it is required to treat as a U.S. account—

(A) In the case of an account holder that is a specified U.S. person—

(*1*) The name, address, and TIN of the account holder; and

(*2*) The account number; and

(B) In the case of an account holder that is a U.S. owned foreign entity that is an NFFE—

(*1*) The name of such entity;

(*2*) The name, address, and TIN of each substantial U.S. owner of such entity; and

(*3*) The account number.

(iii) *Special reporting of accounts held by owner-documented FFIs.* With respect to each account held by an owner-documented FFI, a participating FFI that elects to report under this paragraph (d)(5) must report payments made to the owner-documented FFI under the requirements of sections 6041, 6042, 6045, 6047(d), and 6049, the other information required under each applicable section, and the following information—

(A) The name of such FFI;

(B) The name, address, and TIN of each specified U.S. person identified in §1.1471–3(d)(6)(iv)(A)(*1*) and (*2*); and

(C) The account number for the account held by the owner-documented FFI.

(iv) *Branch reporting.* A participating FFI that reports the information described in paragraphs (d)(5)(ii) and (iii) of this section shall also report the jurisdiction of the branch that maintains the account being reported.

(v) [Reserved] For further guidance, see §1.1471–4T(d)(5)(v).

(vi) [Reserved] For further guidance, see §1.1471–4T(d)(5)(vi).

(vii) *Filing of information under election.* In the case of an account holder that is a specified U.S. person, the information required to be reported under the election described in this paragraph (d)(5) shall be filed with the IRS and issued to the account holder in the time and manner prescribed in sections 6041, 6042, 6045, 6047(d), and 6049 and in accordance with the forms referenced therein and their accompanying instructions provided by the IRS for reporting under each of these sections. If the account holder is an NFFE that is a U.S. owned foreign entity or owner-documented FFI, however, the information required to be reported under the election described in this paragraph (d)(5) shall be filed on Form 8966 in accordance with its requirements and its accompanying instructions.

(6) *Reporting on recalcitrant account holders*—(i) *In general.* Except as otherwise provided in a Model 2 IGA, a participating FFI, as part of its reporting responsibilities under this paragraph (d), shall report to the IRS for each calendar year the information described for each of the classes of account holders described in paragraphs (d)(6)(i)(A) through (E) of this section. See §1.1474–1(d)(4)(ii) for a participating FFI or registered deemed-compliant FFI's requirement to report chapter 4 reportable amounts paid to such account holders and tax withheld.

(A) The aggregate number and aggregate balance or value of accounts held by recalcitrant account holders at the end of the calendar year that are described in §1.1471–5(g)(2)(iv) (referencing passive NFFEs that are recalcitrant account holders).

(B) The aggregate number and aggregate balance or value of accounts held by recalcitrant account holders at the end of the calendar year that are described in §1.1471–5(g)(2)(ii) and (iii) (referencing U.S. persons that are recalcitrant account holders).

(C) The aggregate number and aggregate balance or value of accounts held by recalcitrant account holders at the end of the calendar year, other than accounts described in paragraph (d)(6)(i)(A), (B), or (E) of this section, that have U.S. indicia.

(D) The aggregate number and aggregate balance or value of accounts held by recalcitrant account holders at the end of the calendar year, other than accounts described in paragraph (d)(6)(i)(A) or (E) of this section, that do not have U.S. indicia.

(E) The aggregate number and aggregate balance or value of accounts held by recalcitrant account holders at the end of the calendar year that are dormant accounts.

(ii) *Definition of dormant account.* A dormant account is an account (other than a cash value insurance contract or annuity contract) that is a dormant or inactive account under applicable laws or regulations or the normal operating procedures of the participating FFI that are consistently applied for all accounts maintained by such institution in a particular jurisdiction. If neither applicable laws or regulations

nor the normal operating procedures of the participating FFI maintaining the account address dormant or inactive accounts, an account will be a dormant account if—

(A) The account holder has not initiated a transaction with regard to the account or any other account held by the account holder with the FFI in the past three years; and

(B) The account holder has not communicated with the FFI that maintains such account regarding the account or any other account held by the account holder with the FFI in the past six years.

(iii) *End of dormancy*. An account that is a dormant account under paragraph (d)(6)(ii) of this section ceases to be a dormant account when—

(A) The account holder initiates a transaction with regard to the account or any other account held by the account holder with the FFI;

(B) The account holder communicates with the FFI that maintains such account regarding the account or any other account held by the account holder with the FFI; or

(C) The account ceases to be a dormant account under applicable laws or regulations or the participating FFI's normal operating procedures.

(iv) *Forms*. Reporting under paragraph (d)(6)(i) of this section shall be filed on Form 8966 in accordance with its requirements and accompanying instructions.

(v) *Time and manner of filing*. Except as provided in paragraph (d)(7)(iv)(B) of this section, Form 8966 shall be filed electronically with the IRS on or before March 31 of the year following the end of the calendar year to which the form relates. See the accompanying instructions to this form for electronic filing instructions.

(vi) [Reserved]. For further guidance, see § 1.1471–4T(d)(6)(vi).

(vii) *Record retention requirements*. A participating FFI that produces, in the ordinary course of its business, account statements that summarize the activity (including withdrawals, transfers, and closures) of an account held by a recalcitrant account holder described in paragraph (d)(6)(i)(B) of this section for any calendar year in which the account was required to be reported under paragraph (d)(6) of this section must retain a record of such account statements. Such record must be retained for the longer of six years or the retention period under the FFI's normal business procedures. A participating FFI may be required to extend the six year retention period if the IRS requests such an extension prior to the expiration of the six year period.

(7) [Reserved] For further guidance, see § 1.1471–4T(d)(7).

(i) [Reserved] For further guidance, see § 1.1471–4T(d)(7)(i).

(ii) *Participating FFIs that report under § 1.1471–4(d)(3)*. With respect to accounts that a participating FFI is required to report in accordance with paragraph (d)(2) of this section, the participating FFI may, instead of the information described in paragraphs (d)(3)(ii) and (iii) of this section, report only the following information—

(A) [Reserved] For further guidance, see § 1.1471–4T(d)(7)(ii)(A).

(*1*) The name, address, and TIN of each specified U.S. person who is an account holder and, in the case of any account holder that is an NFFE that is a U.S. owned foreign entity or that is an owner-documented FFI, the name of such entity and the name, address, and TIN of each substantial U.S. owner of such NFFE or, in the case of an owner-documented FFI, of each specified U.S. person identified in § 1.1471–3(d)(6)(iv)(A)(*1*) and (*2*);

(*2*) The account balance or value as of the end of the relevant calendar year, or if the account was closed after the effective date of the FFI agreement, the amount or value withdrawn or transferred from the account in connection with closure; and

(*3*) The account number of the account.

(B) *Reporting with respect to the 2015 calendar year*. With respect to the 2015 calendar year, the participating FFI may report only—

(*1*) The information described in paragraph (d)(7)(ii)(A) of this section; and

(*2*) The payments made with respect to the account except for those payments described in paragraph (d)(4)(iv)(B)(*3*) of this section (certain gross proceeds).

(iii) [Reserved] For further guidance, see § 1.1471–4T(d)(7)(iii).

(iv) *Forms for reporting*—(A) [Reserved] For further guidance, see § 1.1471–4T(d)(7)(iv)(A).

(B) [Reserved] For further guidance, see § 1.1471–4T(d)(7)(iv)(B).

(8) [Reserved] For further guidance, see § 1.1471–4T(d)(8).

(9) *Examples*. The following examples illustrate the provisions of this paragraph (d):

Example 1. Financial institution required to report U.S. account. PFFI1, a participating FFI, issues shares of stock that are financial accounts under § 1.1471–5(b). Such shares are held in custody by PFFI2, another participating FFI, on behalf of U, a specified U.S. person that holds an account with PFFI2. The shares of PFFI1 held by PFFI2 will not be subject to reporting by PFFI1 if PFFI1 may treat PFFI2 as a participating FFI under § 1.1471–3(d)(3). See paragraph (d)(2)(ii)(A) of this section.

Example 2. Financial institution required to report U.S. account. U, a specified U.S. person, holds shares in PFFI1, a participating FFI that invests in other financial institutions (a fund of funds). The shares of PFFI1 are financial accounts under § 1.1471–5(b)(3)(iii). PFFI1 holds shares that are also financial accounts under § 1.1471–5(b)(3)(iii) in PFFI2, another participating FFI. The shares of PFFI2 held by PFFI1 are not subject to reporting by PFFI2, if PFFI2 may treat PFFI1 as a participating FFI under § 1.1471–3(d)(3). See paragraph (d)(2)(ii)(A) of this section.

Example 3. [Reserved] For further guidance, see § 1.1471–4T(d)(9), *Example 3*.

Example 4. Election to perform Form 1099 reporting with regard to an NFFE. Same facts as in *Example 3,* except that PFFI1 has made the election in accordance with paragraph (d)(5) of this section. PFFI1 must complete and file the forms described in paragraph (d)(5)(vii) for FC, treating FC as if it were an individual and citizen of the United States and must identify Q as a substantial U.S. owner of FC on such form. See paragraph (d)(5)(ii) of this section. PFFI1 shall not complete the forms described in paragraph (d)(5)(vii) with regard to U.

Example 5. [Reserved] For further guidance, see § 1.1471–4T(d)(9), *Example 5*.

Example 6. Election to perform Form 1099 reporting with regard to an owner-documented FFI. Same facts as in *Example 5,* except that PFFI1 has made the election in accordance with paragraph (d)(5) of this section. PFFI1 must complete and file the forms described in paragraph (d)(5)(vii) for U and Q.

Example 7. [Reserved] For further guidance, see § 1.1471–4T(d)(9), *Example 7*.

(e) *Expanded affiliated group requirements*—(1) [Reserved] For further guidance, see § 1.1471–4T(e)(1).

(2) *Limited branches*—(i) *In general*. An FFI that otherwise satisfies the requirements for participating FFI status as described in this section will be allowed to become a participating FFI notwithstanding that one or more of its branches cannot satisfy all of the requirements of a participating FFI as described in this section if—

(A) All branches (as defined in paragraph (e)(2)(ii) of this section) that cannot satisfy all of the requirements of a participating FFI as described in this section are limited branches as described in paragraph (e)(2)(iii) of this section;

(B) The FFI maintains at least one branch that complies with all of the requirements of a participating FFI, even if the only branch that can comply is a U.S. branch; and

(C) The FFI agrees to and complies with the conditions in paragraph (e)(2)(iv) of this section.

(ii) [Reserved] For further guidance, see § 1.1471–4T(e)(2)(ii).

(iii) *Limited branch defined*. A limited branch is a branch of an FFI that, under the laws of the jurisdiction that apply with respect to the accounts maintained by the branch, cannot satisfy the conditions of both paragraphs (e)(2)(iii)(A) and (B) of this section, but with respect to which the FFI will agree to the conditions of paragraph (e)(2)(iv) of this section.

(A) With respect to accounts that pursuant to this section the participating FFI is required to treat as U.S. accounts, either report such accounts to the IRS as described in paragraph (d) of this section, close such accounts within a reasonable period of time, or transfer such accounts to a U.S. financial institution, a branch of the FFI that will so report, a participating FFI, or a reporting Model 1 FFI.

(B) With respect to recalcitrant account holders and accounts held by nonparticipating FFIs, withhold with

respect to each such account as required under paragraph (b) of this section, block each such account (as defined in this paragraph), close each such account within a reasonable period of time, or transfer each such account to a U.S. financial institution, a branch of the FFI that will so report, a participating FFI, or a reporting Model 1 FFI. For purposes of this paragraph (e)(2)(iii)(B), an account is a blocked account if the FFI prohibits the account holder from effecting any transactions with respect to an account until such time as the account is closed, transferred, or the account holder provides the documentation described in paragraph (c) of this section for the FFI to determine the U.S. or non-U.S. status of the account and report the account if required under paragraph (d) of this section.

(iv) *Conditions for limited branch status.* An FFI with one or more limited branches must satisfy the following requirements when applying for participating FFI status with the IRS—

(A) Identify the relevant jurisdiction of each branch for which it seeks limited branch status;

(B) Agree that each such branch will identify its account holders under the due diligence requirements applicable to participating FFIs under paragraph (c) of this section, retain a record of account holder and payee documentation pertaining to those identification requirements for the longer of six years from the effective date of the FFI agreement or for as long as the branch maintains the account or obligation, and report to the IRS with respect to accounts that it is required to treat as U.S. accounts to the extent permitted under the relevant laws pertaining to the branch;

(C) Agree to treat each such branch as an entity separate from its other branches for purposes of the withholding requirements described in paragraph (b)(5) of this section;

(D) Agree that each such branch will not open accounts that it is required to treat as U.S. accounts or accounts held by nonparticipating FFIs, including accounts transferred from any branch of the FFI or from any member of its expanded affiliated group; and

(E) Agree that each limited branch will identify itself to withholding agents as a nonparticipating FFI (including to affiliates of the FFI in the same expanded affiliated group that are withholding agents).

(v) *Term of limited branch status (transitional).* An FFI that becomes a participating FFI with one or more limited branches will cease to be a participating FFI after December 31, 2015, unless otherwise provided pursuant to Model 1 IGA or Model 2 IGA. A branch will cease to be a limited branch as of the beginning of the third calendar quarter following the date on which the branch is no longer prohibited from complying with the requirements of a participating FFI as described in this section. In such case, a participating FFI will retain its status as a participating FFI if it notifies the IRS by the date such branch ceases to be a limited branch that it will comply with the requirements of an FFI agreement with respect to such branch, or if otherwise provided pursuant to a Model 1 IGA or Model 2 IGA.

(3) *Limited FFI*—(i) *In general.* An FFI will be allowed to become either a participating FFI or a registered deemed-compliant FFI notwithstanding that one or more of the FFIs in the expanded affiliated group of which the FFI is a member cannot comply with all of the requirements of a participating FFI as described in this section if each such FFI is a limited FFI under paragraph (e)(3)(ii) of this section.

(ii) *Limited FFI defined.* A limited FFI is a member of an expanded affiliated group that includes one or more participating FFIs that agrees to the conditions described in paragraph (e)(3)(iii) of this section to become a limited FFI and if under the laws of each jurisdiction that apply with respect to the accounts maintained by the affiliate, the affiliate cannot satisfy the conditions of both paragraphs (e)(3)(ii)(A) and (B) of this section.

(A) With respect to accounts that are U.S. accounts, report such accounts to the IRS as described in paragraph (d) of this section, close such accounts within a reasonable period of time, or transfer such accounts to a U.S. financial institution, a participating FFI, or a reporting Model 1 FFI.

(B) With respect to recalcitrant account holders and accounts held by nonparticipating FFIs, withhold with respect to each such account as required under paragraph (b) of this section, block each such account, close each such account within a reasonable period of time, or transfer each such account to a U.S. financial institution, a participating FFI, or a reporting Model 1 FFI. See paragraph (e)(2)(iii)(B) of this section for when an account is considered blocked.

(iii) *Conditions for limited FFI status.* An FFI that seeks to become a limited FFI must—

(A) Register as part of its expanded affiliated group's FFI agreement process for limited FFI status;

(B) Agree as part of such registration to identify its account holders under the due diligence requirements applicable to participating FFIs under paragraph (c) of this section, retain a record of account holder and payee documentation pertaining to those identification requirements for the longer of six years from the effective date of its registration as a limited FFI or for as long as the FFI maintains the account or obligation, and report with respect to accounts that it is required to treat as U.S. accounts to the extent permitted under the relevant laws pertaining to the FFI;

(C) Agree as part of such registration that it will not open accounts that it is required to treat as U.S. accounts or accounts held by nonparticipating FFIs, including accounts transferred from any member of its expanded affiliated group; and

(D) Agree as part of such registration that it will identify itself to withholding agents as a nonparticipating FFI.

(iv) *Period for limited FFI status (transitional).* A limited FFI will cease to be a limited FFI after December 31, 2015. An FFI will also cease to be a limited FFI when it becomes a participating FFI or deemed-compliant FFI, or as of the beginning of the third calendar quarter following the date on which the FFI is no longer prohibited from complying with the requirements of a participating FFI as described in this section. In such case, participating FFIs and deemed-compliant FFIs that are members of the same expanded affiliated group will retain their status if, by the date that an FFI ceases to be a limited FFI, such FFI enters into an FFI agreement or becomes a registered deemed-compliant FFI, unless otherwise provided pursuant to an applicable Model 1 IGA or Model 2 IGA.

(4) *Special rule for QIs.* An FFI that has in effect a QI agreement with the IRS will be allowed to become a limited FFI notwithstanding that none of the FFIs in the expanded affiliated group of which the FFI is a member can comply with the requirements of a participating FFI as described in this section if the FFI that is a QI meets the conditions of a limited FFI under paragraph (e)(3)(ii) of this section.

(f) *Verification*—(1) *In general.* This paragraph (f) describes the requirement for a participating FFI to establish and implement a compliance program for satisfying its requirements under this section. Paragraph (f)(2) of this section provides the requirement for a participating FFI to establish a compliance program and the option for a group of FFIs to adopt a consolidated compliance program. Paragraph (f)(3) describes the periodic certification that the participating FFI must make to the IRS regarding the participating FFI's compliance with the requirements of an FFI agreement. Paragraph (f)(4) describes IRS information requests related to compliance with an FFI agreement.

(2) *Compliance program*—(i) *In general.* The participating FFI must appoint a responsible officer to oversee the participating FFI's compliance with the requirements of the FFI agreement. The responsible officer must (either personally or through designated persons) establish a compliance program that includes policies, procedures, and processes sufficient for the participating FFI to satisfy the requirements of the FFI agreement. The responsible officer (or designee) must periodically review the sufficiency of the FFI's compliance program and the FFI's compliance with the requirements of an FFI agreement during the certification period described in paragraph (f)(3) of this section. The results of the periodic review must be considered by the responsible officer in making the

periodic certifications required under paragraph (f)(3) of this section.

(ii) *Consolidated compliance program*—(A) *In general.* A participating FFI that is a member of an expanded affiliated group that includes one or more FFIs may elect to be part of a consolidated compliance program (and perform a consolidated periodic review) under the authority of a participating FFI, reporting Model 1 FFI, or U.S. financial institution (compliance FI) that is a member of the electing FFI's expanded affiliated group, regardless of whether all such members so elect. A sponsoring entity is required to act as the compliance FI for the sponsored FFI group. In addition, when an FFI elects to be part of a consolidated compliance program, each branch that it maintains (including a limited branch or a branch described in §1.1471–5(f)(1)) must be subject to periodic review as part of such program.

(B) *Requirements of compliance FI.* A participating FFI, reporting Model 1 FFI, or U.S. financial institution that agrees to establish and maintain a consolidated compliance program and perform a consolidated periodic review on behalf of one or more FFIs (the compliance group), must agree to identify itself as the compliance FI and identify each FFI for which it acts (an electing FFI) to the extent required by the IRS as part of the FFI registration process or certification procedures. The agreement between the compliance FI and each electing FFI must permit either the compliance FI or the electing FFI to terminate the agreement upon a finding by the IRS or by either party that the other party to the agreement is not fulfilling its obligations under the agreement or is no longer able to fulfill such obligations.

(3) *Certification of compliance*—(i) *In general.* In addition to the certifications required under paragraph (c)(7) of this section, six months following the end of each certification period, the responsible officer must make the certification described in either paragraph (f)(3)(ii) or (iii) of this section. The first certification period begins on the effective date of the FFI agreement and ends at the close of the third full calendar year following the effective date of the FFI agreement. Each subsequent certification period is the three calendar year period following the previous certification period, unless the FFI agreement provides for a different period. The responsible officer must either certify that the participating FFI maintains effective internal controls or, if the participating FFI has failed to remediate any material failures (defined in paragraph (f)(3)(iv) of this section) as of the date of the certification, must make the qualified certification described in paragraph (f)(3)(iii) of this section.

(ii) *Certification of effective internal controls.* The responsible officer must certify to the following statements—

(A) The responsible officer (or designee) has established a compliance program that is in effect as of the date of the certification and that has been subjected to the review as described in paragraph (f)(2)(i) of this section;

(B) With respect to material failures—

(*1*) There are no material failures for the certification period; or

(*2*) If there are any material failures, appropriate actions were taken to remediate such failures and to prevent such failures from reoccurring; and

(C) With respect to any failure to withhold, deposit, or report to the extent required under the FFI agreement, the FFI has corrected such failure by paying any taxes due (including interest and penalties) and filing the appropriate return (or amended return).

(iii) *Qualified certification.* If the responsible officer has identified an event of default or a material failure that the participating FFI has not corrected as of the date of the certification, the responsible officer must certify to the following statements—

(A) With respect to the event of default or material failure—

(*1*) The responsible officer (or designee) has identified an event of default as defined in paragraph (g)(1) of this section; or

(*2*) The responsible officer has determined that as of the date of the certification, there are one or more material failures with respect to the participating FFI's compliance with the FFI agreement and that appropriate actions will be taken to prevent such failures from reoccurring;

(B) With respect to any failure to withhold, deposit, or report to the extent required under the FFI agreement, the FFI will correct such failure by paying any taxes due (including interest and penalties) and filing the appropriate return (or amended return); and

(C) The responsible officer (or designee) will respond to any notice of default (if applicable) or will provide to the IRS, to the extent requested, a description of each material failure and a written plan to correct each such failure.

(iv) *Material failures defined.* A material failure is a failure of the participating FFI to fulfill the requirements of the FFI agreement if the failure was the result of a deliberate action on the part of one or more employees of the participating FFI (its agent, sponsor, or compliance FI) to avoid the requirements of the FFI agreement or was an error attributable to a failure of the participating FFI to implement internal controls sufficient for the participating FFI to meet the requirements of this section. A material failure will not constitute an event of default unless such material failure occurs in more than limited circumstances when a participating FFI has not substantially complied with the requirements of an FFI agreement. Material failures include the following—

(A) The deliberate or systemic failure of the participating FFI to report accounts that it was required to treat as U.S. accounts, withhold on passthru payments to the extent required, deposit taxes withheld, or accurately report recalcitrant account holders or payees that are nonparticipating FFIs as required;

(B) A criminal or civil penalty or sanction imposed on the participating FFI (or any branch or office thereof) by a regulator or other governmental authority or agency with oversight over the participating FFI's compliance with the AML due diligence procedures to which it (or any branch or office thereof) is subject and that is imposed based on a failure to properly identify account holders under the requirements of those procedures; and

(C) A potential future tax liability related to the participating FFI's compliance (or lack thereof) with the FFI agreement for which the FFI establishes, for financial statement purposes, a tax reserve or provision.

(4) *IRS review of compliance*—(i) [Reserved] For further guidance, see §1.1471–4T(f)(4)(i).

(ii) [Reserved] For further guidance, see §1.1471–4T(f)(4)(ii).

(g) *Event of default*—(1) [Reserved] For further guidance, see §1.1471–4T(g)(1).

(i) Failure to obtain, in any case in which foreign law would (but for a waiver) prevent the reporting of U.S. accounts required under paragraph (d) of this section, valid and effective waivers from holders of U.S. accounts or failure to otherwise close or transfer such U.S. accounts as required under paragraph (i) of this section;

(ii) [Reserved] For further guidance, see §1.1471–4T(g)(1)(ii).

(iii) Failure, in any case in which foreign law prevents or otherwise limits withholding to the extent required under paragraph (b) of this section, to fulfill the requirements of paragraph (i) of this section;

(iv) Failure to establish or maintain a compliance program for fulfilling the requirements of the FFI agreement or to perform a periodic review of the participating FFI's compliance;

(v) Failure to take timely corrective actions to remedy a material failure described in paragraph (f)(3)(iv) of this section after making the qualified certification described in paragraph (f)(3)(iii) of this section;

(vi) Failure to make the initial certification required under paragraph (c)(7) of this section or to make the periodic certification required under paragraph (f)(3) of this section within the specified time period;

(vii) Making incorrect claims for refund under the collective refund procedures described in paragraph (h) of this section;

(viii) Failure to cooperate with an IRS request for additional information or making any fraudulent statement or misrepresentation of material fact to the IRS; or

(ix) Any transaction relating to sponsorship, promotion, or noncustodial distribution for or on behalf of any Local FFI, as described in §1.1471–

5(f)(1)(i)(A), that is an investment entity.

(2) [Reserved] For further guidance, see § 1.1471–4T(g)(2).

(3) *Remediation of event of default.* A participating FFI will be permitted to remediate an event of default to the extent that it agrees with the IRS on a remediation plan. Such a plan may, for example, allow a participating FFI to remediate an event of default described in paragraph (g)(1)(iii) of this section by providing specific information regarding its U.S. accounts when the FFI has been unable to report all of the information with respect to such accounts as required under paragraph (d) of this section and has been unable to close or transfer such accounts. The IRS may, as part of a remediation plan, require additional information from the FFI or the performance of the specified review procedures described in paragraph (f)(4)(ii) of this section.

(h) *Collective credit or refund procedures for overpayments*—(1) *In general.* Except as otherwise provided in the FFI agreement, if there has been an overpayment of tax with respect to an account holder or payee of a participating FFI or reporting Model 1 FFI resulting from tax withheld under chapter 4 by either the participating FFI or reporting Model 1 FFI or by its withholding agent during a calendar year and the amount withheld has not been recovered under the reimbursement or set-off procedures described in § 1.1474–2(a) (applied by either the withholding agent or the participating FFI or reporting Model 1 FFI), the participating FFI or reporting Model 1 FFI may request a credit or refund from the IRS of the overpayment to the extent permitted under this paragraph (h) on behalf of such account holder or payee. For purposes of this paragraph (h), an overpayment means an amount withheld in excess of the account holder or payee's U.S. tax liability with respect to the payment (including overwithholding as defined § 1.1474–2(a)(2)). If a participating FFI or reporting Model 1 FFI does not elect the procedure provided in this paragraph (h) to request a credit or refund, the participating FFI or reporting Model 1 FFI is required to (or must request that its withholding agent) file and furnish within a reasonable period a Form 1042–S (or such other form as the IRS may prescribe) and Form 1042 (or amended forms) to report to any account holder or payee that has requested such form with regard to the tax withheld by the participating FFI or reporting Model 1 FFI or its withholding agent.

(2) *Persons for which a collective refund is not permitted.* A participating FFI or reporting Model 1 FFI cannot include in its collective refund claim any payments made to an account holder or payee that is a nonparticipating FFI, a participating FFI or reporting Model 1 FFI that is a flow-through entity (including a WP or WT) or that is acting as an intermediary (including a QI), a U.S. person, or a passive NFFE that is a flow-through entity with respect to taxes allocated to its substantial U.S. owners. A participating FFI or reporting Model 1 FFI must follow the procedures set forth under sections 6402 and 6414 and the regulations thereunder, as modified by this paragraph (h), to claim the credit or refund. No credit or refund will be allowed after the expiration of the statutory period of limitation for refunds under section 6511.

(3) *Payments for which a collective refund is permitted.* A collective refund is permitted only for payments withheld upon under chapter 4.

(4) *Procedural and other requirements for collective refund.* A participating FFI or reporting Model 1 FFI may use the collective refund procedures of this paragraph (h) under the following conditions—

(i) All account holders and payees for which the participating FFI or reporting Model 1 FFI seeks a refund must have been included on a Form 1042–S in a reporting pool of nonparticipating FFIs or recalcitrant account holders described in § 1.1474–1(d)(4)(iii) with respect to the payments for which refund is sought and the participating FFI or reporting Model 1 FFI (or the withholding agent) has not filed or furnished a Form 1042–S to any such account holder or payee with respect to which the refund is sought;

(ii) If a refund is sought on the grounds that the account holder or payee of a payment that is U.S. source FDAP income subject to withholding under chapter 3 is entitled to a reduced

rate of tax by reason of any treaty obligation of the United States, the participating FFI or reporting Model 1 FFI has also obtained valid documentation that meets the requirements of chapter 3 for a reduced rate of tax and such documentation is available to the IRS upon request with respect to each such account holder or payee; and

(iii) In filing a claim for refund with the IRS under this paragraph (h), the participating FFI or reporting Model 1 FFI submits the following, together with its Form 1042 (or amended Form 1042) on which it provides a reconciliation of amounts withheld and claims a credit or refund, a schedule identifying the taxes withheld with respect to each account holder or payee to which the claim relates, and, if applicable, a copy of the Form 1042–S (or such other form as the IRS may prescribe) furnished to the participating FFI or reporting Model 1 FFI by its withholding agent reporting the taxes withheld to which the claim relates, and a statement that includes the following representations and explanation—

(A) The reason(s) for the overpayment;

(B) A representation that the participating FFI or reporting Model 1 FFI or its withholding agent deposited the tax for which a refund is being sought under section 6302 and has not applied the reimbursement or set-off procedure of §1.1474–2 to adjust the tax withheld to which the claim relates;

(C) A representation that the participating FFI or reporting Model 1 FFI has repaid or will repay the amount for which refund is sought to the appropriate account holders or payees;

(D) A representation that the participating FFI or reporting Model 1 FFI retains a record showing the total amount of tax withheld, credits from other withholding agents, tax assumed by the participating FFI or reporting Model 1 FFI, adjustments for underwithholding, and reimbursements for overwithholding as its relates to each account holder and payee and also showing the repayment to such account holders or payees for the amount of tax for which a refund is being sought;

(E) A representation that the participating FFI or reporting Model 1 FFI retains valid documentation that meets the requirements of chapters 3 (if applicable) and 4 to substantiate the amount of overwithholding with respect to each account holder and payee for which a refund is being sought and that such documentation is available to the IRS upon request; and

(F) A representation that the participating FFI or reporting Model 1 FFI will not issue a Form 1042–S (or such other form as the IRS may prescribe) to any account holder or payee for which a refund is being sought.

(i) *Legal prohibitions on reporting U.S. accounts and withholding*—(1) *In general.* Except to the extent otherwise provided in a Model 2 IGA, a participating FFI (or branch thereof) that is prohibited by foreign law from reporting the information required under paragraph (d) of this section with respect to a U.S. account must follow the procedures of paragraph (i)(2) of this section to obtain a valid and effective waiver of such law and, if such waiver is not obtained within a reasonable period of time, to close or transfer such account. A participating FFI (or branch thereof) that is prohibited by law from withholding with respect to a recalcitrant account holder or nonparticipating FFI as required under paragraph (b) of this section is required to perform the procedures of paragraph (i)(3) of this section to obtain an authorization to withhold on payments made to the account holder or payee to the extent required under paragraph (b) of this section, close the account or terminate the obligation (as applicable), or to sell the assets in the account that produce (or could produce) withholdable payments and, if such authorization is not obtained within a reasonable period of time, to transfer or block such account or obligation. An FFI that cannot comply with any of the requirements of this paragraph (i) is not eligible to enter into an FFI agreement with the IRS, but may obtain status as a limited FFI if the FFI meets the requirements and agrees to the conditions of paragraph (e)(3) of this section. If a branch of an FFI cannot comply with the requirements of this paragraph (i), then the FFI must agree to the conditions of a limited branch as described

in paragraph (e)(2) of this section to obtain status as a participating FFI.

(2) *Requesting waiver or closure of a U.S. account*—(i) *In general.* If a participating FFI (or branch thereof) is prohibited by law from reporting the information required under paragraph (d) of this section with respect to a U.S. account that it maintains unless a valid and effective waiver of such law is obtained, the participating FFI must request a valid and effective waiver (including by obtaining waivers from all relevant account holders if necessary). For accounts other than preexisting accounts, the participating FFI must obtain a valid and effective waiver upon opening the account or, if prohibitions on disclosure cannot by law be waived, the participating FFI must refrain from opening accounts that are U.S. accounts or must transfer such accounts as described in paragraph (i)(2)(iii) of this section. Beginning on the date provided in §1.1471–5(g)(3) and until such time as the holder of a U.S. account either consents to disclosure or closure of the account or until the account is transferred, the participating FFI is required to treat the account as held by a recalcitrant account holder.

(ii) *Valid and effective waiver for a U.S. account.* For purposes of this paragraph (i)(2), a valid and effective waiver is a waiver that, under the applicable law governing the participating FFI's agreement with the account holder, permits the participating FFI (or branch thereof) to report to the IRS all of the information specified in paragraph (d) of this section with respect to the U.S. account and permits the FFI to provide the IRS with additional information concerning such account as specified in paragraph (f) or (g) of this section.

(iii) *Closure or transfer of U.S. account.* If the participating FFI (or branch thereof) is prohibited by law from reporting a U.S. account to the IRS under paragraph (d) of this section and the participating FFI either does not obtain a valid and effective waiver (and Form W–9) or prohibitions on disclosure cannot by law be waived, the participating FFI (or branch thereof) must close or transfer the account within a reasonable time. If the participating FFI cannot close or transfer the account absent the account holder consenting to closure, the participating FFI must request such a consent from such account holder and, if obtained, close or transfer the account within a reasonable period of time.

(3) *Legal prohibitions preventing withholding*—(i) *In general.* If the participating FFI (or branch thereof) is prohibited by law from withholding with respect to payments subject to withholding under paragraph (b) of this section, the participating FFI (or a branch thereof) must obtain the authorization described in this paragraph (i)(3)(i) from each account holder or payee receiving such payments to either withhold, close the account or terminate the obligation, or sell all of the assets in the account that produce (or could produce) withholdable payments. If the participating FFI does not receive such authorization from the account holder or payee within a reasonable period of time, the participating FFI must block or transfer such accounts or obligations as described in paragraph (i)(3)(ii) of this section.

(ii) *Block or transfer accounts or obligations.* If the participating FFI does not receive the authorization described in paragraph (i)(3)(i) of this section from the account holder or payee within a reasonable period of time and is prohibited by law from closing accounts or terminating obligations with account holders or payees as described in paragraph (i)(3)(i) of this section, the participating FFI must either block or transfer such accounts or obligations prior to the date on which the participating FFI would otherwise be required to withhold under paragraph (b) of this section. See paragraph (e)(2)(iii)(B) of this section for when an account is considered blocked. A transfer of an account or obligation must be made to a branch of the FFI that may so withhold or to a participating FFI or reporting Model 1 FFI.

(j) *Effective/applicability date.* This section generally applies on January 28, 2013. For other dates of applicability, see §§1.1471–4(b)(1), (4); 1.1471–

4(d)(7); 1.1471–4(e)(2)(v); 1.1471–4(e)(3)(iv).

[T.D. 9610, 78 FR 5942, Jan. 28, 2013; 78 FR 55205, Sept. 10, 2013, as amended by T.D. 9657, 79 FR 12843, Mar. 6, 2014; 79 FR 37178, July 1, 2014]

§ 1.1471–4T FFI Agreement (temporary).

(a) [Reserved] For further guidance, see § 1.1471–4(a).

(1) through (2) [Reserved] For further guidance, see § 1.1471–4(a)(1) through (2).

(3) *Reporting*. A participating FFI is required to report the information described in paragraph (d) of this section annually with respect to U.S. accounts under section 1471(c) and accounts held by recalcitrant account holders. A participating FFI must also comply with the filing requirements described in § 1.1474–1(c) and (d) to report payments that are chapter 4 reportable amounts paid to recalcitrant account holders and nonparticipating FFIs (including the transitional reporting of foreign reportable amounts paid to nonparticipating FFIs for calendar years 2015 and 2016 described in § 1.1471–4(d)(2)(ii)(F)). A participating FFI that is unable to obtain a waiver, if required by foreign law, to report an account as required under paragraph (d) of this section must close or transfer such account within a reasonable period of time as described in paragraph (i) of this section.

(4) through (7) [Reserved] For further guidance, see § 1.1471–4(a)(4) through (7).

(b) [Reserved] For further guidance, see § 1.1471–4(b).

(1) *In general*. Except as otherwise provided in a Model 2 IGA, a participating FFI is required to deduct and withhold a tax equal to 30 percent of any withholdable payment made by such participating FFI to an account held by a recalcitrant account holder or to a nonparticipating FFI after June 30, 2014, to the extent required under paragraph (b)(3) of this section. See paragraph (b)(2) of this section for rules for a participating FFI to identify the payee of a payment in order to determine whether withholding is required under this paragraph (b). See paragraph (b)(4) of this section for the extent of a participating FFI's requirement to deduct and withhold tax on a foreign passthru payment made by such participating FFI to an account held by a recalcitrant account holder or to a nonparticipating FFI. See paragraph (b)(5) of this section for the rules for withholding on payments to limited branches and limited FFIs. See paragraph (b)(6) for the special allowance to set aside in escrow amounts withheld with respect to dormant accounts. See paragraph (b)(7) of this section for the withholding requirements of certain U.S. branches of participating FFIs. See § 1.1471–2 for the exceptions to and special rules for withholding and the exclusion from the definitions of the terms *withholdable payment* and *foreign passthru payment* that applies to any payment made under a grandfathered obligation or the gross proceeds from the disposition of such an obligation. See § 1.1474–1(d)(4)(iii) for the requirement of participating FFIs to report payments that are chapter 4 reportable amounts. See § 1.1474–6 for the coordination of withholding on payments under this paragraph (b) with the other withholding provisions under the Code.

(2) *Withholding determination*. Except as otherwise provided under § 1.1471–2 and, with respect to certain preexisting accounts, under paragraph (c) of this section, a participating FFI is required to determine whether withholding applies at the time a payment is made by reliably associating the payment with valid documentation described in paragraph (c) of this section for the payee of the payment. For a payment made to an account, if the account is held by one or more individuals, the payee is each individual account holder. For a payment made to an account held by an entity, except as otherwise provided in § 1.1471–3(a)(3), the payee is the account holder. If the participating FFI makes a withholdable payment to a payee that is an entity and the payment is made with respect to an obligation that is not an account, except as otherwise provided in § 1.1471–3(a)(3), the payee is the person to whom the payment is made. See § 1.1473–1(a) to determine when a payment is made in the case of a withholdable payment. If a participating FFI cannot reliably associate a payment (or any portion of a payment) with valid documentation, the rules described in paragraph (c) of

this section shall apply to determine the chapter 4 status of the account holder (and payee if other than the account holder). Notwithstanding the foregoing, a participating FFI may establish after the date of payment that withholding was not required to the extent permitted under §1.1471–3(c)(7) or may apply the procedures provided in §1.1474–2 when overwithholding occurs.

(3) *Satisfaction of withholding requirements.*

(i) *In general.* A participating FFI that complies with the withholding obligations of this paragraph (b) with respect to accounts held by recalcitrant account holders and payees that are nonparticipating FFIs shall be deemed to satisfy its withholding obligations under sections 1471(a) and 1472 with respect to such account holders and payees.

(ii) *Withholding not required.* A participating FFI that is an NQI, NWP, NWT, or that is a QI that elects under section 1471(b)(3) not to assume withholding responsibility for a payment and that provides its withholding agent with the information necessary to allocate all or a portion of the payment to each payee as part of a withholding certificate described in §1.1471–3(c)(3)(iii) will generally not be required to withhold under paragraph (b)(1) of this section. See §1.1471–2(a)(2)(ii), however, for the circumstances under which a participating FFI that is an NQI, NWP, or NWT has a residual withholding responsibility. See also §1.1471–3(c)(9)(iii)(B) for the circumstances under which a participating FFI that is a broker has a residual withholding responsibility as an intermediary of the payment and may also be liable for any underwithholding that occurs. See §§1.1471–2(a) and 1.1472–1(a)(2)(i) and the QI, WP, or WT agreement for the withholding requirements of a participating FFI that is a QI, WP, or WT for purposes of chapter 4.

(iii) *Election to withhold under section 3406.* A participating FFI may elect to satisfy its withholding obligation under paragraph (b)(1) of this section with respect to recalcitrant account holders that are also U.S. non-exempt recipients subject to backup withholding under section 3406 receiving withholdable payments, to the extent that the payments also constitute reportable payments, by applying withholding under section 3406 at the backup withholding rate to such withholdable payments. A participating FFI may make the election described in this paragraph only if it complies with the information reporting rules under chapter 61 with respect to payments to which backup withholding applies. Nothing in this paragraph relieves a participating FFI of its requirement to backup withhold under section 3406 with respect to reportable payments that are not also withholdable payments. See §1.1474–6(f) for the general rule that satisfying withholding requirements under chapter 4 will satisfy backup withholding requirements under section 3406 for a payment that is both a withholdable payment and a reportable payment.

(4) through (5)(ii) [Reserved] For further guidance, see §1.1471–4(b)(4) through (b)(5)(ii).

(6) *Special rule for dormant accounts.* A participating FFI that makes a withholdable payment not otherwise subject to withholding under chapter 3 or backup withholding under section 3406 to a recalcitrant account holder of a dormant account that it maintains must withhold on the account for purposes of chapter 4. However, the participating FFI may, in lieu of depositing the tax withheld, set aside the amount withheld in escrow until the date that the account ceases to be a dormant account. In such case, the tax withheld becomes due 90 days following the date that the account ceases to be a dormant account if the account holder does not provide the documentation required under paragraph (c) of this section or becomes refundable to the account holder if the account holder provides the documentation required under paragraph (c) of this section establishing that withholding does not apply. A participating FFI that maintains a dormant account of a recalcitrant account holder and that elects to escrow withheld tax pursuant to this paragraph (b)(6) may not delegate the responsibility to escrow withheld tax to the withholding agent from which it is receiving payment. Once a dormant

account escheats irrevocably to a foreign government under the relevant laws in the jurisdiction in which the participating FFI (or branch thereof) operates, the participating FFI is no longer required to deposit with the IRS the amount held in escrow with respect to the account. See paragraph (d)(6)(ii) of this section for the definition of dormant account.

(7) [Reserved] For further guidance, see §1.1471–4(b)(7).

(c) [Reserved] For further guidance, see §1.1471–4(c).

(1) through (4)(iii)(B) [Reserved] For further guidance, see §1.1471–4(c)(1) through (c)(4)(iii)(B).

(5) [Reserved] For further guidance, see §1.1471–4(c)(5).

(i) through (iii)(C) [Reserved] For further guidance, see §1.1471–4(c)(5)(i) through (c)(5)(iii)(C).

(iv) [Reserved] For further guidance, see §1.1471–4(c)(5)(iv).

(A) [Reserved] For further guidance, see §1.1471–4(c)(5)(iv)(A).

(B) [Reserved] For further guidance, see §1.1471–4(c)(5)(iv)(B).

(*1*) through (*1*)(*vii*) [Reserved] For further guidance, see §1.1471–4(c)(5)(iv)(B)(*1*) through (c)(5)(iv)(B)(*1*)(*vii*).

(*2*) [Reserved] For further guidance, see §1.1471–4(c)(5)(iv)(B)(*2*).

(*i*) through (*v*) [Reserved] For further guidance, see §1.1471–4(c)(5)(iv)(B)(*2*)(*i*) through (*v*).

(*vi*) *Standing instructions to pay amounts*. If information required to be reviewed with respect to the account contains standing instructions to pay amounts from the account to an account maintained in the United States for an account holder, the participating FFI must retain a record of a withholding certificate and either a form of documentary evidence described in §1.1471–3(c)(5)(i)(A) through (C) or a written reasonable explanation (as defined in §1.1441–7(b)(12)) establishing the account holder's status as a foreign person.

(*vii*) [Reserved] For further guidance, see §1.1471–4(c)(5)(iv)(B)(*2*)(*vii*).

(C) through (D)(*4*)(*vi*) [Reserved] For further guidance, see §1.1471–4(c)(5)(iv)(C) through (c)(5)(iv)(D)(*4*)(*vi*).

(E) Exception for preexisting individual accounts previously documented as held by foreign individuals. A participating FFI that has previously obtained documentation from an account holder to establish the account holder's status as a foreign individual in order to meet its obligations under its QI, WP, or WT agreement with the IRS, or to fulfill its reporting obligations as a U.S. payor under chapter 61, is not required to perform the electronic search described in paragraph (c)(5)(iv)(C) of this section or the enhanced review described in paragraph (c)(5)(iv)(D)(*3*) of this section for such account. Additionally, a participating FFI with a U.S. payor as its paying agent is not required to perform the electronic search described in paragraph (c)(5)(iv)(C) of this section or the enhanced review described in paragraph (c)(5)(iv)(D)(*3*) of this section for an account for which its paying agent that is a U.S. payor has previously obtained documentation to establish the account holder's status as a foreign individual under chapter 61. The participating FFI is required, however, to perform the relationship manager inquiry described in paragraph (c)(5)(iv)(D)(*2*) of this section if the account is a high-value account described in paragraph (c)(5)(iv)(D)(*1*) of this section. For purposes of this paragraph (c)(5)(iv)(E), a participating FFI has documented an account holder's foreign status under chapter 61 if the participating FFI (or its paying agent that is a U.S. payor) has retained a record of the documentation required under chapter 61 to establish the foreign status of an individual and the account received a reportable payment as defined under section 3406(b) in any prior year that was properly reported in that year. In the case of a participating FFI that is a QI, WP, or WT, the participating FFI has documented an account holder's foreign status under its QI, WP, or WT agreement (as applicable) if the participating FFI has met the relevant documentation and reporting requirements of its agreement with respect to an account holder that received a reportable amount in any year in which its agreement was in effect.

(6) through (7) [Reserved] For further guidance, see §1.1471–4(c)(6) through (7).

(d) [Reserved] For further guidance, see §1.1471–4(d).

(1) *Scope of paragraph.* This paragraph (d) provides rules addressing the information reporting requirements applicable to participating FFIs with respect to U.S. accounts, accounts held by owner-documented FFIs, and recalcitrant account holders. Paragraph (d)(2) of this section describes the accounts subject to reporting under this paragraph (d), and specifies the participating FFI that is responsible for reporting an account or account holder. Paragraph (d)(3) of this section describes the information required to be reported and the manner of reporting by a participating FFI under section 1471(c)(1) with respect to a U.S. account or an account held by an owner-documented FFI. Paragraph (d)(4) of this section provides definitions of terms applicable to paragraph (d)(3). Paragraph (d)(5) of this section describes the conditions for a participating FFI to elect to report its U.S. accounts and accounts held by owner-documented FFIs under section 1471(c)(2) and the information required to be reported under such election. Paragraph (d)(6) of this section provides rules for a participating FFI to report its recalcitrant account holders. Paragraph (d)(7) of this section provides special transitional reporting rules applicable to reports due in 2015 and 2016. Paragraph (d)(8) of this section provides the reporting requirements of a participating FFI that is a QI, WP, or WT with respect to U.S. accounts. See chapter 61 for reporting requirements that may apply to a payor that is a participating FFI or registered deemed-compliant FFI with respect to payees. See § 301.1474–1(a) for the requirement for a financial institution to file the information required under this paragraph (d) on magnetic media.

(2) [Reserved] For further guidance, see § 1.1471–4(d)(2).

(i) *Accounts subject to reporting.* Subject to the rules of paragraph (d)(7) of this section, a participating FFI shall report by the time and in the manner prescribed in paragraph (d)(3)(vi) of this section, the information described in paragraph (d)(3) of this section with respect to accounts maintained at any time during each calendar year for which the participating FFI is responsible for reporting under paragraph (d)(2)(ii) of this section and that it is required to treat as U.S. accounts or accounts held by owner-documented FFIs, including accounts that are identified as U.S. accounts by the end of such calendar year pursuant to a change in circumstances during such year as described in paragraph (c)(2)(iii) of this section. Alternatively, a participating FFI may elect to report under paragraph (d)(5) of this section with respect to such accounts for each calendar year. With respect to accounts held by recalcitrant account holders, a participating FFI is required to report with respect to each calendar year under paragraph (d)(6) of this section and not under paragraph (d)(3) or (5) of this section. For separate reporting requirements of participating FFIs with respect to foreign reportable amounts and for transitional rules for participating FFIs to report certain foreign reportable amounts paid to accounts held by nonparticipating FFIs, see § 1.1471–4(d)(2)(ii)(F).

(ii) [Reserved] For further guidance, see § 1.1471–4(d)(2)(ii).

(A) *In general.* Except as otherwise provided in paragraphs (d)(2)(ii)(B) through (F) of this section, the participating FFI that maintains the account is responsible for reporting the account in accordance with the requirements of paragraph (d)(2)(iii), (d)(3), or (d)(5) of this section (as applicable) for each calendar year. Except as otherwise provided in paragraph (d)(2)(ii)(C) of this section, a participating FFI is responsible for reporting accounts held by recalcitrant account holders that it maintains in accordance with the requirements of paragraph (d)(6) of this section. A participating FFI is not required to report the information required under paragraph (d)(6) of this section with respect to an account held by a recalcitrant account holder of another participating FFI even if that other participating FFI holds the account as an intermediary on behalf of such account holder and regardless of whether the participating FFI is required to report payments made to the recalcitrant account holder of such other FFI under § 1.1474–1(d)(4)(iii).

(B) [Reserved] For further guidance, see § 1.1471–4(d)(2)(ii)(B).

(*1*) [Reserved] For further guidance, see §1.1471–4(d)(2)(ii)(B)(*1*).

(*2*) If the territory financial institution does not agree to be treated as a U.S. person with respect to a withholdable payment, the participating FFI must report with respect to each specified U.S. person or substantial U.S. owner of an entity that is treated as a passive NFFE with respect to which the territory financial institution acts as an intermediary and provides the participating FFI with the information and documentation required under §1.1471–3(c)(3)(iii)(G). The participating FFI shall be treated as having satisfied these reporting requirements if it reports with respect to each such specified U.S. person or substantial U.S. owner of a passive NFFE either—

(*i*) The information required by chapter 61 and described in paragraph (d)(5)(ii) or (d)(5)(iii) of this section (except account number); or

(*ii*) The information described in paragraph (d)(3)(ii), (d)(3)(iii), or (d)(3)(iv) of this section (except account number and account balance or value).

(C) through (D) [Reserved] For further guidance, see §1.1471–4(d)(2)(ii)(C) through (D).

(E) *Requirement to identify the GIIN of a branch that maintains an account.* A participating FFI may report under paragraph (d)(3) or (d)(5) of this section either with respect to all of its U.S. accounts and recalcitrant accounts, or separately with respect to any clearly identified group of accounts (such as by line of business or the location of where the account is maintained). A participating FFI shall include the GIIN assigned to the participating FFI or its branches to identify the jurisdiction of the FFI or branch that maintains the accounts subject to reporting under paragraph (d)(3) or (d)(5) of this section. Additionally, a participating FFI shall file with the IRS the information required to be reported on accounts that it maintains in accordance with the forms and their accompanying instructions provided by the IRS. For the definition of a branch that applies for purposes of this paragraph (d), see paragraph (e)(2)(ii) of this section.

(F) *Reporting by participating FFIs (including QIs, WPs, WTs, and certain U.S. branches not treated as U.S. persons) for accounts of nonparticipating FFIs (transitional).* Except as otherwise provided in the instructions to Form 8966, ''FATCA Report,'' if a participating FFI (including a QI, WP, WT, or U.S. branch of a participating FFI or registered deemed-compliant FFI that is not treated as a U.S. person) maintains an account for a nonparticipating FFI (including a limited branch and limited FFI treated as a nonparticipating FFI), the participating FFI must report on Form 8966 the name and address of the nonparticipating FFI, and the aggregate amount of foreign source payments, as described in paragraph (d)(4)(iv) of this section, paid to or with respect to each such account (foreign reportable amount) for each of the calendar years 2015 and 2016. If, however, the participating FFI is prohibited under domestic law from reporting on a specific payee basis without consent from the nonparticipating FFI account holder and the participating FFI has not been able to obtain such consent, the participating FFI may instead report the aggregate number of accounts held by such non-consenting nonparticipating FFIs and the aggregate amount of foreign reportable amounts paid with respect to such accounts, as described in paragraph (d)(4)(iv) of this section, during the calendar year. A participating FFI may, in lieu of reporting only foreign reportable amounts, report all income, gross proceeds, and redemptions (irrespective of the source) paid to the nonparticipating FFI's account by the participating FFI during the calendar year. In addition, the participating FFI must retain the account statements related to such nonparticipating FFI accounts. See paragraphs (d)(6)(iv), (v), (vi) and (vii) of this section for rules relating to reporting on recalcitrant account holders. Form 8966 shall be filed electronically with the IRS on or before March 31 of the year following the end of the calendar year to which the form relates.

(iii) [Reserved] For further guidance, see §1.1471–4(d)(2)(iii).

(A) *Special reporting rule for U.S. payors other than U.S. branches.* Participating FFIs that are U.S. payors (other than U.S. branches) shall be treated as having satisfied the chapter 4 reporting requirements described in paragraph (d)(2)(i) of this section with respect to accounts that the participating FFI is required to treat as U.S. accounts, or accounts held by owner-documented FFIs, if the participating FFI reports with respect to each such account either—

(*1*) The information required by chapter 61 and described in paragraph (d)(5)(ii) or (d)(5)(iii) of this section; or

(*2*) The information described in paragraph (d)(3)(ii), (d)(3)(iii), or (d)(3)(iv) of this section. However, such participating FFI that is required to report on such accounts under chapter 61 is not relieved of that obligation.

(B) *Special reporting rules for U.S. branches treated as U.S. persons.* A U.S. branch treated as a U.S. person (as defined in §1.1471–1(b)(135)) shall be treated as having satisfied the reporting requirements described in paragraph (d)(2)(i) of this section if it reports under—

(*1*) through (*4*) [Reserved] For further guidance, see §1.1471–4(d)(2)(iii)(B)(*1*) through (*4*).

(C) *Special reporting rules for U.S. branches not treated as U.S. persons.* A U.S. branch of a registered deemed-compliant FFI or limited FFI that is not treated as a U.S. person shall be treated as having satisfied the reporting requirements described in paragraph (d)(2)(i) of this section if it reports the information described in paragraph (d)(2)(iii)(B)(*1*) through (*4*) of this section with respect to account holders of accounts that the U.S. branch is required to treat as U.S. accounts or accounts held by owner-documented FFIs.

(3) [Reserved] For further guidance, see §1.1471–4(d)(3).

(i) [Reserved] For further guidance, see §1.1471–4(d)(3)(i).

(ii) [Reserved] For further guidance, see §1.1471–4(d)(3)(ii).

(A) through (D) [Reserved] For further guidance, see §1.1471–4(d)(3)(ii)(A) through (D).

(E) Such other information as is otherwise required to be reported under this paragraph (d)(3) or in the form described in paragraph (d)(3)(v) of this section and its accompanying instructions.

(iii) [Reserved] For further guidance, see §1.1471–4(d)(3)(iii).

(A) through (E) [Reserved] For further guidance, see §1.1471–4(d)(3)(iii)(A) through (E).

(F) Such other information as is otherwise required to be reported under this paragraph (d)(3) or in the form described in paragraph (d)(3)(v) of this section and its accompanying instructions.

(iv) through (iv)(F) [Reserved] For further guidance, see §1.1471–4(d)(3)(iv) through (d)(3)(iv)(F).

(v) [Reserved] For further guidance, see §1.1471–4(d)(3)(v).

(vi) [Reserved] For further guidance, see §1.1471–4(d)(3)(vi).

(vii) [Reserved] For further guidance, see §1.1471–4(d)(3)(vii).

(4) through (4)(v) [Reserved] For further guidance, see §1.1471–4(d)(4) through (d)(4)(v).

(5) [Reserved] For further guidance, see §1.1471–4(d)(5).

(i) through (iv) [Reserved] For further guidance, see §1.1471–4(d)(5)(i) through (d)(5)(iv).

(v) *Time and manner of making the election.* A participating FFI (or one or more branches of the participating FFI) may make the election described in this paragraph (d)(5) by reporting the information described in this paragraph (d)(5) on the form described in paragraph (d)(5)(vii) of this section on the next reporting date following the end of the calendar year for which the election is made. A participating FFI may make an election under this paragraph (d)(5) either with respect to all of its U.S. accounts and recalcitrant accounts or, separately, with respect to any clearly identified group of accounts (such as by line of business or the location where the account is maintained).

(vi) *Revocation of election.* A participating FFI may revoke the election described in paragraph (d)(5)(i) of this section (as a whole or with regard to any clearly identified group of accounts) by reporting the information described in paragraph (d)(3) of this section beginning on the first reporting

date with respect to the calendar year that follows the calendar year for which it last reports an account under this paragraph (d)(5).

(vii) [Reserved] For further guidance, see §1.1471–4(d)(5)(vii).

(6) [Reserved] For further guidance, see §1.1471–4(d)(6).

(i) through (v) [Reserved] For further guidance, see §1.1471–4(d)(6)(i) through (v).

(vi) *Extensions in filing*. The IRS shall grant an automatic 90-day extension of time in which to file Form 8966. Form 8809, ''Request for Extension of Time to File Information Returns,'' (or such other form as the IRS may prescribe) must be used to request such extension of time and must be filed no later than the due date of Form 8966. Under certain hardship conditions, the IRS may grant an additional 90-day extension. A request for extension due to hardship must contain a statement of the reasons for requesting the extension and such other information as the forms or instructions may require.

(vii) [Reserved] For further guidance, see §1.1471–4(d)(6)(vii).

(7) *Special reporting rules with respect to the 2014 and 2015 calendar years*

(i) *In general*. If the effective date of the FFI agreement of a participating FFI is on or before December 31, 2015, the participating FFI is required to report U.S. accounts and accounts held by owner-documented FFIs that it maintained (or that it is otherwise required to report under paragraph (d)(2)(ii) of this section) during the 2014 and 2015 calendar years in accordance with paragraph (d)(7)(ii) or (iii) of this section.

(ii) [Reserved] For further guidance, see §1.1471–4(d)(7)(ii).

(A) *Reporting with respect to the 2014 calendar year*. With respect to accounts maintained during the 2014 calendar year—

(*1*) through (*3*) [Reserved] For further guidance, see §1.1471–4(d)(7)(ii)(A)(*1*) through (*3*).

(B) [Reserved] For further guidance, see §1.1471–4(d)(7)(ii)(B).

(*1*) through (*2*) [Reserved] For further guidance, see §1.1471–4(d)(7)(ii)(B)(*1*) through (*2*).

(iii) *Participating FFIs that report under §1.1471–4(d)(5)*. A participating FFI that elects to report under paragraph (d)(5) of this section may report only the information described in paragraphs (d)(7)(ii)(A)(*1*) and (*3*) of this section for its 2014 calendar year. With respect to its 2015 calendar year, a participating FFI is required to report all of the information required to be reported under paragraphs (d)(5)(i) through (iii) of this section but may exclude from such reporting amounts reportable under section 6045.

(iv) [Reserved] For further guidance, see §1.1471–4(d)(7)(iv).

(A) *In general*. Except as provided in paragraph (d)(7)(iv)(B) of this section, reporting under paragraph (d)(7)(ii) of this section shall be made on Form 8966 (or such other form as the IRS may prescribe), in the manner described in paragraph (d)(3)(vi) of this section. Reporting under paragraph (d)(7)(iii) of this section shall be made in accordance with paragraph (d)(5)(vii) of this section.

(B) *Special determination date and timing for reporting with respect to the 2014 calendar year*. With respect to the 2014 calendar year, a participating FFI must report under paragraph (d)(3) or (5) of this section on all accounts that are identified and documented under paragraph (c) of this section as U.S. accounts or accounts held by owner-documented FFIs as of December 31, 2014, (or as of the date an account is closed if the account is closed prior to December 31, 2014) if such account was outstanding on or after the effective date of the participating FFI's FFI agreement. Reporting for the 2014 calendar year shall be filed with the IRS on or before March 31, 2015. However, a U.S. payor (including a U.S. branch treated as a U.S. person (as defined in §1.1471–1(b)(135))) that reports in accordance with paragraph (d)(2)(iii) of this section may report all or a portion of its U.S. accounts and accounts held by owner-documented FFIs in accordance with the dates otherwise applicable to reporting under chapter 61 with respect to the 2014 calendar year.

(8) *Reporting requirements of QIs, WPs, and WTs*. In general, the reporting requirements with respect to the U.S. accounts maintained by a participating FFI that is a QI, WP, or WT will be

consistent with the reporting requirements with respect to such accounts of a participating FFI that is not a QI, WP, or WT. See the QI, WP, or WT agreement for the coordination of the chapter 4 reporting obligations of a participating FFI that also is a QI, WP, or WT.

(9) [Reserved] For further guidance, see § 1.1471–4(d)(9).

Example 1. [Reserved] For further guidance, see § 1.1471–4(d)(9), *Example 1.*

Example 2. [Reserved] For further guidance, see § 1.1471–4(d)(9), *Example 2.*

Example 3. U.S. owned foreign entity. FC, a passive NFFE, holds a custodial account with PFFI1, a participating FFI. U, a specified U.S. person, owns 3% of the only class of stock of FC. Q, another specified U.S. person, owns 12% of the only class of stock of FC. U is not a substantial U.S. owner of FC. See § 1.1473–1(b). Q is a substantial U.S. owner of FC and FC identifies her as such to PFFI1. PFFI1 does not elect to report under paragraph (d)(5) of this section. PFFI1 must complete and file the reporting form described in paragraph (d)(3)(v) of this section and report the information described in paragraph (d)(3)(iii) with respect to both FC and Q. See paragraph (d)(3)(ii) of this section.

Example 4. [Reserved] For further guidance, see § 1.1471–4(d)(9), *Example 4.*

Example 5. Owner-documented FFI. DC, an owner-documented FFI under § 1.1471–3(d)(6), holds a custodial account with PFFI1, a participating FFI. U, a specified U.S. person, owns 3% of the only class of stock of DC. Q, another specified U.S. person, owns 12% of the only class of stock of DC. Both U and Q are persons identified in § 1.1471–3(d)(6)(iv)(A)(*1*) and DC identifies U and Q to PFFI1 and otherwise provides to PFFI1 all of the information required to be reported with respect to DC. PFFI1 must complete and file a form described in paragraph (d)(3)(v) of this section with regard to U and Q. See paragraph (d)(3)(iii) of this section.

Example 6. [Reserved] For further guidance, see § 1.1471–4(d)(9), *Example 6.*

Example 7. Sponsored FFI. DC2 is an FFI that has agreed to have a sponsoring entity, PFFI1, fulfill DC2's chapter 4 responsibilities under § 1.1471–5(f)(2)(iii). U, a specified U.S. person, holds an equity interest in DC2 that is a financial account under § 1.1471–5(b)(3)(iii). PFFI1 must complete and file a form described in paragraph (d)(3)(v) of this section with regard to U's account on behalf of DC2. See paragraph (d)(2)(ii)(C) of this section.

(e) [Reserved] For further guidance, see § 1.1471–4(e).

(1) *In general.* Except as otherwise provided in this paragraph (e)(1) or paragraphs (e)(2) and (e)(3) of this section, each FFI that is a member of an expanded affiliated group must have the chapter 4 status of a participating FFI, deemed-compliant FFI, or exempt beneficial owner as a condition for any member of such group to obtain the status of a participating FFI or registered deemed-compliant FFI. Accordingly, except as otherwise provided in published guidance, each FFI other than a certified deemed-compliant FFI or exempt beneficial owner in an expanded affiliated group must submit a registration form to the IRS in such manner as the IRS may prescribe requesting an FFI agreement, registered deemed-compliant status, or limited FFI status as a condition for any member to become a participating FFI or registered deemed-compliant FFI. Except as provided in paragraph (e)(2) of this section, each FFI other than a certified deemed-compliant FFI or exempt beneficial owner that is a member of such group must also agree to all of the requirements for the status for which it applies with respect to all accounts maintained at all of its branches, offices, and divisions. For the withholding requirements of a participating FFI with respect to its limited branches and its affiliates that are limited FFIs, see paragraph (b)(5) of this section. Notwithstanding the foregoing, an FFI (or branch thereof) that is treated as a participating FFI or a deemed-compliant FFI pursuant to a Model 1 IGA or Model 2 IGA will maintain such status provided that it meets the terms for such status pursuant to such agreement.

(2) [Reserved] For further guidance, see § 1.1471–4(e)(2).

(i) [Reserved] For further guidance, see § 1.1471–4(e)(2)(i).

(A) through (C) [Reserved] For further guidance, see § 1.1471–4(e)(2)(i)(A) through (C).

(ii) *Branch defined.* For purposes of this section, a branch is a unit, business, or office of an FFI that is treated as a branch under the regulatory regime of a country or that is otherwise regulated under the laws of a country as separate from other offices, units, or branches of the FFI and also includes an entity that is disregarded as an entity separate from an FFI (including

branches maintained by such disregarded entity). For purposes of this section, a branch includes a unit, business, or office of an FFI located in a country in which it is resident, and a unit, business, or office of an FFI located in the country in which the FFI is created or organized. All units, businesses, and offices of a participating FFI located in a single country, and all entities disregarded as entities separate from a participating FFI and located in a single country, shall be treated as a single branch and may use the same GIIN. An account will be treated as maintained by a branch or disregarded entity if the rights and obligations of the account holder and the participating FFI with regard to such account (including any assets held in the account) are governed by the laws of the country of the branch or disregarded entity.

(iii) through (v) [Reserved] For further guidance, see §1.1471–4(e)(2)(iii) through (v).

(3) through (4) [Reserved] For further guidance, see §1.1471–4(e)(3) through (4).

(f) [Reserved] For further guidance, see §1.1471–4(f).

(1) through (3)(iv)(C) [Reserved] For further guidance, see §1.1471–4(f)(1) through (f)(3)(iv)(C).

(4) [Reserved] For further guidance, see §1.1471–4(f)(4).

(i) *General inquiries.* The IRS, based upon the information reporting forms described in paragraphs (d)(3)(v), (d)(5)(vii), or (d)(6)(iv) of this section filed with the IRS for each calendar year, may request additional information with respect to the information reported on the forms or may request the account statements described in paragraph (d)(4)(v) of this section. The IRS may request additional information to determine an FFI's compliance with its FFI agreement and to assist the IRS with its review of account holder compliance with tax reporting requirements.

(ii) *Inquiries regarding substantial noncompliance.* If, based on the information reporting forms described in paragraphs (d)(3)(v), (d)(5)(vii), or (d)(6)(iv) of this section filed with the IRS for each calendar year, the certifications made by the responsible officer described in paragraph (f)(3) of this section, or any other information related to the participating FFI's compliance with its FFI agreement, the IRS determines in its discretion that the participating FFI may not have substantially complied with the requirements of its FFI agreement, the IRS may request from the responsible officer (or designee) information necessary to verify the participating FFI's compliance with the FFI agreement. The IRS may request, for example, a description or copy of the participating FFI's policies and procedures for fulfilling the requirements of the FFI agreement, a description of the participating FFI's procedures for conducting its periodic review, or a copy of any written reports documenting the findings of such review in order to evaluate the sufficiency of the participating FFI's compliance program and review of such program. The IRS may also request the performance of specified review procedures by a person (including an external auditor or third-party consultant) that the IRS identifies as competent to perform such procedures given the facts and circumstances surrounding the FFI's potential failure to comply with the FFI agreement. The IRS may make these requests to a sponsoring entity with respect to any sponsored FFI.

(g) [Reserved] For further guidance, see §1.1471–4(g).

(1) *Defined.* An event of default occurs if a participating FFI fails to perform material obligations required with respect to the due diligence, verification, withholding, or reporting requirements of the FFI agreement or if the IRS determines that the participating FFI has failed to substantially comply with the requirements of the FFI agreement. An event of default also includes the occurrence of the following—

(i) [Reserved] For further guidance, see §1.1471–4(g)(1)(i).

(ii) Failure to significantly reduce, over a period of time, the number of account holders or payees that the participating FFI is required to treat as recalcitrant account holders or nonparticipating FFIs, as a result of the participating FFI failing to comply with the due diligence procedures for the identification and documentation

of account holders and payees, as set forth in paragraph (c) of this section;

(iii) through (ix) [Reserved] For further guidance, see §1.1471–4(g)(1)(iii) through (ix).

(2) *Notice of event of default.* Following an event of default known by or disclosed to the IRS, the IRS will deliver to the participating FFI a notice of default specifying the event of default. The IRS will request that the participating FFI remediate the event of default within a specified time period. The participating FFI must respond to the notice of default and provide information responsive to an IRS request for information or state the reasons why the participating FFI does not agree that an event of default has occurred. Taking into account the terms of any applicable Model 2 IGA, if the participating FFI does not provide a response within the specified time period, the IRS may, at its sole discretion, deliver a notice of termination that terminates the FFI's participating FFI status. A participating FFI may request, within a reasonable period of time, reconsideration of a notice of default or notice of termination by written request to the Deputy Commissioner (International), LB&I.

(3) [Reserved] For further guidance, see §1.1471–4(g)(3).

(h) through (j) [Reserved] For further guidance, see §1.1471–4(h) through (j).

(k) *Expiration date.* The applicability of this section expires on February 28, 2017.

[T.D. 9657, 79 FR 12844, Mar. 6, 2014; 79 FR 37179, July 1, 2014; 79 FR 68619, Nov. 18, 2014]

§1.1471–5 Definitions applicable to section 1471.

(a) *U.S. accounts*—(1) *In general.* This paragraph (a) defines the term *U.S. account* and describes when a person is treated as the holder of a financial account (account holder). This paragraph also provides rules for determining when an exception to U.S. account status applies for certain depository accounts, including account aggregation requirements relevant to applying the exception.

(2) *Definition of U.S. account.* Subject to the exception described in paragraph (a)(4)(i) of this section, a U.S. account is any financial account maintained by an FFI that is held by one or more specified U.S. persons or U.S. owned foreign entities. For the definition of the term financial account, see paragraph (b) of this section. For the definition of the term specified U.S. person, see §1.1473–1(c). For the definition of the term U.S. owned foreign entity, see paragraph (c) of this section. For reporting requirements of participating FFIs with respect to U.S. accounts, see §1.1471–4(d).

(3) *Account holder*—(i) [Reserved] For further guidance, see §1.1471–5T(a)(3)(i).

(ii) *Financial accounts held by agents that are not financial institutions.* A person, other than a financial institution, that holds a financial account for the benefit or account of another person as an agent, custodian, nominee, signatory, investment advisor, or intermediary, is not treated as an account holder with respect to such account for purposes of this section. Instead, such other person is treated as the account holder.

(iii) *Jointly held accounts.* With respect to a jointly held account, each joint holder is treated as an account holder for purposes of determining whether the account is a U.S. account. Thus, an account is a U.S. account if any of the account holders is a specified U.S. person or a U.S. owned foreign entity and the account is not otherwise excepted from U.S. account status under paragraph (a)(4) of this section. When more than one U.S. person is a joint holder, each U.S. person will be treated as an account holder and will be attributed the entire balance of the jointly held account, including for purposes of applying the aggregation rules set forth in paragraph (b)(4)(iii) of this section.

(iv) *Account holder for insurance and annuity contracts.* An insurance or annuity contract is held by each person that is entitled to access the contract's value (for example, through a loan, withdrawal, surrender, or otherwise) or change a beneficiary under the contract. If no person can access the contract's value or change a beneficiary, the account holders are any person named in the contract as an owner and any person who is entitled to receive a future payment under the terms of the contract. When an obligation to pay an

amount under the contract becomes fixed, each person entitled to receive a payment is an account holder.

(v) *Examples.* The following examples illustrate the provisions of paragraph (a)(3) of this section:

Example 1. Account held by agent. F, a nonresident alien, holds a power of attorney from U, a specified U.S. person, that authorizes F to open, hold, and make deposits and withdrawals with respect to a depository account on behalf of U. The balance of the account for the calendar year is $100,000. F is listed as the holder of the depository account at a participating FFI, but because F holds the account as an agent for the benefit of U, F is not ultimately entitled to the funds in the account. Because the depository account is treated as held by U, a specified U.S. person, the account is a U.S. account.

Example 2. Jointly held accounts. U, a specified U.S. person, holds a depository account in a participating FFI. The balance of the account for the calendar year is $100,000. The account is jointly held with A, an individual who is a nonresident alien. Because one of the joint holders is a specified U.S. person, the account is a U.S. account.

Example 3. Jointly held accounts. U and Q, both specified U.S. persons, hold a depository account in a participating FFI. The balance of the account for the calendar year is $100,000. The account is a U.S. account and both U and Q are treated as holders of the account.

(4) *Exceptions to U.S. account status*—(i) [Reserved] For further guidance, see § 1.1471–5T(a)(4)(i).

(ii) *Election to forgo exception.* A participating FFI may elect to disregard the exception described in paragraph (a)(4)(i) of this section by reporting all U.S. accounts, including those accounts that would otherwise meet the conditions of the exception.

(iii) *Example. Aggregation rules for exception to U.S. account status for certain depository accounts.* In Year 1, a U.S. resident individual, U, holds a depository account with CB, a commercial bank that is a participating FFI. The balance in U's CB account at the end of Year 1 is $35,000. In Year 1, U also holds a custodial account with CB's brokerage business. The custodial account has a $45,000 balance as of the end of Year 1. CB's retail banking and brokerage businesses share computerized information management systems that associate U's depository account and U's custodial account with U and with one another within the meaning of paragraph (b)(4)(iii)(A) of this section. For purposes of applying the $50,000 threshold described in paragraph (a)(4)(i) of this section, however, a depository account is aggregated only with other depository accounts. Therefore, U's depository account is eligible for the paragraph (a)(4)(i) exception to U.S. account status because the balance of the depository account does not exceed $50,000.

(b) *Financial accounts*—(1) *In general.* Except as otherwise provided in this paragraph (b), the term *financial account* means—

(i) *Depository account.* Any depository account (as defined in paragraph (b)(3)(i) of this section) maintained by a financial institution;

(ii) *Custodial account.* Any custodial account (as defined in paragraph (b)(3)(ii) of this section) maintained by a financial institution;

(iii) *Equity or debt interest*—(A) *Equity or debt interests in an investment entity.* Any equity or debt interest (other than interests regularly traded on an established securities market under paragraph (b)(3)(iv) of this section) in an investment entity described in paragraph (e)(4)(i)(B) or (C) of this section (including an entity that is also a depository institution, custodial institution, insurance company, or investment entity described in paragraph (e)(4)(i)(A) of this section);

(B) *Certain equity or debt interests in a holding company or treasury center.* Any equity or debt interest (other than interests regularly traded on an established securities market under paragraph (b)(3)(iv) of this section) in a holding company or treasury center described in paragraph (e)(1)(v) of this section if—

(*1*) The expanded affiliated group of which the entity is a member includes one or more investment entities described in paragraph (e)(4)(i)(B) or (C) of this section or passive NFFEs and the income derived by such investment entities or passive NFFEs is 50 percent or more of the aggregate income earned by the expanded affiliated group;

(*2*) [Reserved] For further guidance, see § 1.1471–5T(b)(1)(iii)(B)(*2*).

(*3*) The value of the interest is determined, directly or indirectly, primarily by reference to assets that give rise (or could give rise) to withholdable payments (as determined under paragraph (b)(3)(v)) of this section); or

(*4*) The interest is issued with a principal purpose of avoiding the reporting or withholding requirements of chapter 4;

(C) *Equity or debt interests in other financial institutions.* Any equity or debt interest (other than interests regularly traded on an established securities market under paragraph (b)(3)(iv) of this section) in an entity that is a depository institution, custodial institution, investment entity described in paragraph (e)(4)(i)(A) of this section, or insurance company if—

(*1*) The value of the interest is determined, directly or indirectly, primarily by reference to assets that give rise (or could give rise) to withholdable payments (as determined under paragraph (b)(3)(v) of this section); or

(*2*) The interest is issued with a principal purpose of avoiding the reporting or withholding requirements of chapter 4.

(iv) *Insurance and annuity contracts.* A contract issued or maintained by an insurance company, a holding company (as described in paragraph (e)(5)(i)(C) of this section) of an insurance company, or a financial institution described in paragraphs (e)(1)(i), (ii), (iii), or (v) of this section, if the contract is a cash value insurance contract (as defined in paragraph (b)(3)(vii) of this section) or an annuity contract.

(2) *Exceptions.* A financial account does not include an account described in this paragraph (b)(2).

(i) *Certain savings accounts*—(A) *Retirement and pension accounts.* A retirement or pension account that satisfies the following conditions under the laws of the jurisdiction where the account is maintained:

(*1*) The account is subject to regulation as a personal retirement account or is part of a registered or regulated retirement or pension plan for the provision of retirement or pension benefits (including disability or death benefits);

(*2*) The account is tax-favored (as described in paragraph (b)(2)(i)(E) of this section);

(*3*) Annual information reporting is required to the relevant tax authorities with respect to the account;

(*4*) Withdrawals are conditioned on reaching a specified retirement age, disability, or death, or penalties apply to withdrawals made before such specified events; and

(*5*) Either—

(*i*) Annual contributions are limited to $50,000 or less, or

(*ii*) There is a maximum lifetime contribution limit to the account of $1,000,000 or less.

(B) *Non-retirement savings accounts.* An account (other than an insurance or annuity contract) that satisfies the following conditions under the laws of the jurisdiction where the account is maintained:

(*1*) The account is subject to regulation as a savings vehicle for purposes other than for retirement;

(*2*) The account is tax-favored (as described in paragraph (b)(2)(i)(E) of this section);

(*3*) Withdrawals are conditioned on meeting specific criteria related to the purpose of the savings account (for example, the provision of educational or medical benefits), or penalties apply to withdrawals made before such criteria are met; and

(*4*) Annual contributions are limited to $50,000 or less;

(C) *Rollovers.* An account that otherwise satisfies the requirements of paragraph (b)(2)(i)(A) or (B) of this section will not fail to satisfy such requirements solely because such account may receive assets or funds transferred from one or more accounts that meet the requirements of paragraph (b)(2)(i)(A) or (B) of this section, one or more retirement or pension funds that meet the requirements of §1.1471–6(f), one or more accounts described in paragraph (b)(2)(vi) of this section, or one or more entities identified as nonreporting financial institutions under the terms of an applicable Model 1 or Model 2 IGA because they are retirement or pension funds.

(D) *Coordination with section 6038D.* The exclusions provided under paragraph (b)(2)(i) of this section shall not apply for purposes of determining

whether an account or other arrangement is a financial account for purposes of section 6038D.

(E) *Account that is tax-favored.* For purposes of this paragraph (b)(2)(i), an account is tax-favored under the laws of a jurisdiction where the account is maintained if—

(*1*) Contributions to the account that would otherwise be subject to tax under such laws are deductible or excluded from the gross income of the account holder or taxed at a reduced rate; or

(*2*) Taxation of investment income from the account is deferred or taxed at a reduced rate.

(ii) *Certain term life insurance contracts.* A life insurance contract with a coverage period that will end before the insured individual attains age 90, provided that the contract satisfies the following conditions—

(A) Periodic premiums, which do not decrease over time, are payable at least annually during the period the contract is in existence or until the insured attains age 90, whichever is shorter;

(B) The contract has no contract value that any person can access (by withdrawal, loan, or otherwise) without terminating the contract;

(C) The amount (other than a death benefit) payable upon cancellation or termination of the contract cannot exceed the aggregate premiums paid for the contract, less the sum of mortality, morbidity, and expense charges (whether or not actually imposed) for the period or periods of the contract's existence and any amounts paid prior to the cancellation or termination of the contract; and

(D) The contract is not held by a transferee for value.

(iii) *Account held by an estate.* An account that is held solely by an estate if the documentation for such account includes a copy of the deceased's will or death certificate.

(iv) *Certain escrow accounts.* An escrow account that is established in connection with—

(A) A court order or judgment; or

(B) A sale, exchange, or lease of real or personal property, provided that the account meets the following conditions—

(*1*) The account is funded solely with a down payment, earnest money, deposit in an amount appropriate to secure an obligation of one of the parties directly related to the transaction, or a similar payment, or with a financial asset that is deposited in the account in connection with the sale, exchange, or lease of the property;

(*2*) The account is established and used solely to secure the obligation of the purchaser to pay the purchase price for the property, the seller to pay any contingent liability, or the lessor or lessee to pay for any damages relating to the leased property as agreed under the lease;

(*3*) The assets of the account, including the income earned thereon, will be paid or otherwise distributed for the benefit of the purchaser, seller, lessor, or lessee (including to satisfy such person's obligation) when the property is sold, exchanged, or surrendered, or the lease terminates;

(*4*) The account is not a margin or similar account established in connection with a sale or exchange of a financial asset; and

(*5*) The account is not associated with a credit card account.

(v) *Certain annuity contracts.* A non-investment linked, non-transferable, immediate life annuity contract (including a disability annuity) that monetizes a retirement or pension account described in paragraph (b)(2)(i)(A) or (b)(2)(vi) of this section.

(vi) *Account or product excluded under an intergovernmental agreement.* An account or product that is excluded from the definition of financial account under the terms of an applicable Model 1 IGA or Model 2 IGA.

(3) *Definitions.* The following definitions apply for purposes of chapter 4—

(i) *Depository account*—(A) *In general.* Except as otherwise provided in this paragraph (b)(3)(i), the term *depository account* means any account that is—

(*1*) A commercial, checking, savings, time, or thrift account, or an account that is evidenced by a certificate of deposit, thrift certificate, investment certificate, passbook, certificate of indebtedness, or any other instrument for placing money in the custody of an entity engaged in a banking or similar business for which such institution is

obligated to give credit (regardless of whether such instrument is interest bearing or non-interest bearing), including, for example, a credit balance with respect to a credit card account issued by a credit card company that is engaged in a banking or similar business; or

(*2*) Any amount held by an insurance company under a guaranteed investment contract or under a similar agreement to pay or credit interest thereon or to return the amount held.

(B) *Exceptions*. A depository account does not include—

(*1*) A negotiable debt instrument that is traded on a regulated market or over-the-counter market and distributed and held through financial institutions; or

(*2*) An advance premium or premium deposit described in paragraph (b)(3)(vii)(C)(*5*) of this section.

(ii) *Custodial account*. The term *custodial account* means an arrangement for holding a financial instrument, contract, or investment (including, but not limited to, a share of stock in a corporation, a note, bond, debenture, or other evidence of indebtedness, a currency or commodity transaction, a credit default swap, a swap based upon a nonfinancial index, a notional principal contract as defined in §1.446–3(c), an insurance or annuity contract, and any option or other derivative instrument) for the benefit of another person.

(iii) *Equity interest in certain entities*—(A) *Partnership*. In the case of a partnership that is a financial institution, the term *equity interest* means either a capital or profits interest in the partnership.

(B) *Trust*. In the case of a trust that is a financial institution, an *equity interest* means an interest held by—

(*1*) A person who is an owner of all or a portion of the trust under sections 671 through 679;

(*2*) A beneficiary who is entitled to a mandatory distribution from the trust as defined in §1.1473–1(b)(3); or

(*3*) A beneficiary who may receive a discretionary distribution as defined in §1.1473–1(b)(3) from the trust but only if such person receives a distribution in the calendar year.

(iv) [Reserved] For further guidance, see §1.1471–5T(b)(3)(iv).

(v) *Value of interest determined, directly or indirectly, primarily by reference to assets that give rise (or could give rise) to withholdable payments*—(A) [Reserved] For further guidance, see §1.1471–5T(b)(3)(v)(A).

(B) *Debt interest*. The value of a debt interest is determined, directly or indirectly, primarily by reference to assets that give rise (or could give rise) to withholdable payments if—

(*1*) [Reserved] For further guidance, see §1.1471–5T(b)(3)(v)(B)(*1*).

(*2*) [Reserved] For further guidance, see §1.1471–5T(b)(3)(v)(B)(*2*).

(vi) [Reserved] For further guidance, see §1.1471–5T(b)(3)(vi) through (b)(3)(vi)(B)(*2*).

(vii) *Cash value insurance contract*—(A) *In general*. The term *cash value insurance contract* means an insurance contract (other than an indemnity reinsurance contract between two insurance companies and a term life insurance contract described in paragraph (b)(2)(ii) of this section) that has an aggregate cash value greater than $50,000 at any time during the calendar year, applying the rules set forth in paragraph (b)(4)(iii) of this section. A participating FFI may elect to disregard the $50,000 threshold in the preceding sentence by reporting all contracts with a cash value greater than zero.

(B) *Cash value*. Except as otherwise provided in paragraph (b)(3)(vii)(C) of this section, the term *cash value* means any amount (determined without reduction for any charge or policy loan) that—

(*1*) Is payable under the contract to any person upon surrender, termination, cancellation, or withdrawal; or

(*2*) Any person can borrow under or with regard to (for example, by pledging as collateral) the contract.

(C) *Amounts excluded from cash value*. Cash value does not include an amount payable—

(*1*) Solely by reason of the death of an individual insured under a life insurance contract;

(*2*) As a personal injury or sickness benefit or a benefit providing indemnification of an economic loss incurred upon the occurrence of the event insured against;

(*3*) As a refund of a previously paid premium (less cost of insurance

charges whether or not actually imposed) under an insurance contract (other than a life insurance or annuity contract) due to cancellation or termination of the contract, decrease in risk exposure during the effective period of the contract, or arising from the correction of a posting or similar error with regard to the premium for the contract; or

(*4*) As a policyholder dividend (other than a termination dividend) provided that the dividend relates to an insurance contract under which the only benefits payable are described in paragraph (b)(3)(vii)(C)(*2*) of this section.

(*5*) As a return of an advance premium or premium deposit for an insurance contract for which the premium is payable at least annually if the amount of the advance premium or premium deposit does not exceed the next annual premium that will be payable under the contract.

(D) *Policyholder dividend*—(*1*) For purposes of paragraph (b)(3)(vii)(C)(*4*) of this section and except as otherwise provided in this paragraph, a policyholder dividend means any dividend or similar distribution to policyholders in their capacity as such, including—

(*i*) An amount paid or credited (including as an increase in benefits) if the amount is not fixed in the contract but rather depends on the experience of the insurance company or the discretion of management;

(*ii*) A reduction in the premium that, but for the reduction, would have been required to be paid; and

(*iii*) An experience rated refund or credit based solely upon the claims experience of the contract or group involved.

(*2*) A policyholder dividend cannot exceed the premiums previously paid for the contract, less the sum of the cost of insurance and expense charges (whether or not actually imposed) during the contract's existence and the aggregate amount of any prior dividends paid or credited with regard to the contract.

(*3*) A policyholder dividend does not include any amount that is in the nature of interest that is paid or credited to a contract holder to the extent that such amount exceeds the minimum rate of interest required to be credited with respect to contract values under local law.

(4) *Account balance or value.* This paragraph (b)(4) provides rules for determining the balance or value of a financial account for purposes of chapter 4. For example, the rules of this paragraph apply for purposes of determining whether an FFI meets the requirements of paragraph (f)(2)(i), (f)(2)(ii) or (f)(3) of this section to certify to a deemed-compliant FFI status. The rules of this paragraph also apply to a participating FFI's due diligence and reporting obligations to the extent required under § 1.1471–4(c) or (d) and to a U.S. withholding agent's due diligence obligations to the extent required under § 1.1471–3.

(i) *In general.* Except as otherwise provided in paragraph (b)(4)(ii) of this section with respect to immediate annuities, the balance or value of a financial account is the balance or value calculated by the financial institution for purposes of reporting to the account holder. In the case of an account described in paragraph (b)(1)(iii) of this section, the balance or value of an equity interest is the value calculated by the financial institution for the purpose that requires the most frequent determination of value, and the balance or value of a debt interest is its principal amount. Except as provided in paragraph (b)(3)(vii) of this section, the balance or value of an insurance or annuity contract is the balance or value as of either the calendar year end or the most recent contract anniversary date. The balance or value of the account is not to be reduced by any liabilities or obligations incurred by an account holder with respect to the account or any of the assets held in the account and is not to be reduced by any fees, penalties, or other charges for which the account holder may be liable upon terminating, transferring, surrendering, liquidating, or withdrawing cash from the account. Each holder of a jointly held account is attributed the entire balance or value of the joint account. See § 1.1473–1(b)(3) for rules regarding the valuation of trust interests that also apply under this paragraph (b)(4)(i) to determine the value of trust interests that are financial accounts.

(ii) *Special rule for immediate annuity*—(A) *Immediate annuities without minimum benefit guarantees*. If the value of an immediate annuity contract with no minimum benefit guarantee is not reported to the account holder, the account balance or value of the contract is the sum of the net present values on the valuation date of the amounts reasonably expected to be payable in future periods under the contract.

(B) *Immediate annuities with a minimum benefit guarantee*. The account balance or value of an annuity contract with a minimum guarantee is the sum of the net present values on the valuation date of—

(*1*) The non-guaranteed amounts reasonably expected to be payable in future periods; and

(*2*) The guaranteed amounts payable in future periods.

(C) *Net present value of amounts payable in future periods*. The net present value of an amount payable in a future period shall be determined using—

(*1*) A reasonable actuarial valuation method, and

(*2*) The mortality tables and interest rate(s)—

(*i*) Prescribed pursuant to section 7520 and the regulations thereunder; or

(*ii*) Used by the issuer of the contract to determine the amounts payable under the contract.

(iii) *Account aggregation requirements*—(A) *In general*. To the extent a financial institution is required under chapter 4 to determine the aggregate balance or value of an account, the financial institution is required to aggregate the account balance or value of all accounts that are held (in whole or in part) by the same person and that are maintained by the financial institution or members of its expanded affiliated group, but only to the extent that the financial institution's computerized systems link the accounts by reference to a data element, such as client number, EIN, or foreign tax identifying number, and allow the account balances of such accounts to be aggregated. Notwithstanding the rules set forth in this paragraph (b)(4)(iii), a financial institution is required to aggregate the balance or value of accounts that it treats as consolidated obligations.

(B) *Aggregation rule for relationship managers*. To the extent a financial institution is required under chapter 4 to apply the aggregation rules of this paragraph (b)(4)(iii), the financial institution also is required to aggregate all accounts that a relationship manager knows are directly or indirectly owned, controlled, or established (other than in a fiduciary capacity) by the same person, as well as all accounts that the relationship manager has associated with one another through a relationship code, customer identification number, TIN, or similar indicator, or that the relationship manager would typically associate with each other under the procedures of the financial institution (or the department, division, or unit with which the relationship manager is associated).

(*C*) *Examples*. The following examples illustrate the account aggregation requirements of this paragraph (b)(4)(iii):

Example 1. FFI not required to aggregate accounts for U.S. account exception. A U.S. resident individual, U, holds a depository account with Branch 1 of CB, a commercial bank that is a participating FFI. The balance in U's Branch 1 account at the end of Year 1 is $35,000. U also holds a depository account with Branch 2 of CB, with a $45,000 balance at the end of Year 1. CB's retail banking businesses share computerized information management systems across its branches, but U's accounts are not associated with one another in the shared computerized information system. In addition, CB has not assigned a relationship manager to U or U's accounts. Because the accounts are not associated in CB's system or by a relationship manager, CB is not required to aggregate the accounts under paragraph (b)(4)(iii) and both accounts are eligible for the exception to U.S. account status described in paragraph (a)(4)(i) of this section as neither account exceeds the $50,000 threshold.

Example 2. FFI required to aggregate accounts for U.S. account exception. Same facts as *Example 1*, except that both of U's depository accounts are associated with U and with one another by reference to CB's internal identification number. The system shows the account balances for both accounts, and such balances may be electronically aggregated, though the system does not show a combined balance for the accounts. In determining whether such accounts meet the exception to U.S. account status described in paragraph (a)(4)(i) of this section for certain depository accounts with an aggregate balance or value of $50,000 or less, CB is required to aggregate

the account balances of all depository accounts under the rules of paragraph (b)(4)(iii) of this section. Under those rules, U is treated as holding depository accounts with CB with an aggregate balance of $80,000. Accordingly, neither account is eligible for the exception to U.S. account status, because the accounts, when aggregated, exceed the $50,000 threshold.

Example 3. Aggregation rules for joint accounts maintained by a participating FFI. In Year 1, a U.S. resident individual, U, holds a custodial account that is a preexisting account at custodial institution CI, a participating FFI. The balance in U's CI custodial account at the end of Year 1 is $35,000. U also holds a joint custodial account that is a preexisting account with her sister, A, a nonresident alien for U.S. federal income tax purposes, with another custodial institution, CI2. The balance in the joint account at the end of Year 1 is also $35,000. CI and CI2 are part of the same expanded affiliated group and share computerized information management systems. Both U's custodial account at CI and U and A's custodial account at CI2 are associated with U and with one another by reference to CI's internal identification number and the system allows the balances to be aggregated. In determining whether such accounts meet the documentation exception described in §1.1471–4(c)(4)(iv) for certain preexisting individual accounts with an aggregate balance or value of $50,000 or less, CI is required to aggregate the account balances of accounts held in whole or in part by the same account holder under the rules of paragraph (b)(4)(iii) of this section. Under those rules, U is treated as having financial accounts with C1 and CI2, each with an aggregate balance of $70,000. Accordingly, neither account is eligible for the documentation exception.

Example 4. Aggregation for applying indefinite validity periods. In Year 1, an owner-documented FFI, O, holds an offshore account with Branch 1 of CB, a commercial bank that is a U.S. withholding agent. The balance in O's CB account at the end of Year 1 is $600,000. In Year 1, O also holds an account in the United States with Branch 2 of CB. The Branch 2 account has a $450,000 balance at the end of Year 1. CB's banking businesses share computerized information management systems across its branches. O's accounts are associated with one another in the shared computerized information system and the system allows the balances to be aggregated. In determining whether CB is permitted to apply an indefinite validity period for the documentation submitted for O's account at Branch 1 pursuant to §1.1471–3(c)(6)(ii)(C)(*4*) (permitting indefinite validity for a withholding statement of an owner-documented FFI if the balance or value of all accounts held by the owner-documented FFI does not exceed $1,000,000), CB is required to aggregate the account balance of O's accounts at Branch 1 and Branch 2 to the extent required under the rules of paragraph (b)(4)(iii) of this section. Accordingly, O is treated as holding financial accounts with CB with an aggregate balance of $1,050,000 and the documentation submitted for O's account at Branch 1 is not eligible for the indefinite validity period described under §1.1471–3(c)(6)(ii)(C)(*4*).

(iv) *Currency translation of balance or value.* If the balance or value of a financial account, other obligation, or the aggregate amount payable under a group life or group annuity contract described in §1.1471–4(c)(4) is denominated in a currency other than U.S. dollars, a withholding agent must calculate the balance or value by applying a spot rate determined under §1.988–1(d) to translate such balance or value into the U.S. dollar equivalent. For the purpose of a participating or registered deemed-compliant FFI reporting an account under §1.1471–4(d), the spot rate must be determined as of the last day of the calendar year (or, in the case of an insurance contract or annuity contract, the most recent contract anniversary date, when applicable) for which the account is being reported or, if the account was closed during such calendar year, the date the account was closed. In the case of an FFI determining whether an account meets (or continues to meet) a preexisting account documentation exception described in §1.1471–4(c)(3)(iii) or (c)(5)(iii), or whether the account is an account described in paragraph (a)(4)(i) of this section, the spot rate must be determined on the date for which the FFI is determining the threshold amount as prescribed in those provisions.

(5) *Account maintained by financial institution.* A custodial account is maintained by the financial institution that holds custody over the assets in the account (including a financial institution that holds assets in street name for an account holder in such institution). A depository account is maintained by the financial institution that is obligated to make payments with respect to the account (excluding an agent of a financial institution regardless of whether such agent is a financial institution under paragraph (e)(1) of this section). Any equity or debt interest in

a financial institution that constitutes a financial account under paragraph (b)(1)(iii) of this section is maintained by such financial institution. A cash value insurance contract or an annuity contract described in paragraph (b)(1)(iv) of this section is maintained by the financial institution that is obligated to make payments with respect to the contract.

(c) [Reserved] For further guidance, see § 1.1471–5T(c).

(d) *Definition of FFI.* The term *FFI* means, with respect to any entity that is not resident in a country that has in effect a Model 1 IGA or Model 2 IGA, any financial institution (as defined in paragraph (e) of this section) that is a foreign entity. With respect to any entity that is resident in a country that has in effect a Model 1 IGA or Model 2 IGA, an FFI is any entity that is treated as a Financial Institution pursuant to such Model 1 IGA or Model 2 IGA. A territory financial institution is not an FFI under this paragraph (d).

(e) *Definition of financial institution*—(1) *In general.* Except as otherwise provided in paragraph (e)(5) of this section, the term *financial institution* means any entity that—

(i) Accepts deposits in the ordinary course of a banking or similar business (as defined in paragraph (e)(2) of this section) (depository institution);

(ii) Holds, as a substantial portion of its business (as defined in paragraph (e)(3) of this section), financial assets for the benefit of one or more other persons (custodial institution);

(iii) Is an investment entity (as defined in paragraph (e)(4) of this section);

(iv) Is an insurance company or a holding company (as described in paragraph (e)(5)(i)(C) of this section) that is a member of an expanded affiliated group that includes an insurance company, and the insurance company or holding company issues, or is obligated to make payments with respect to, a cash value insurance or annuity contract described in paragraph (b)(1)(iv) of this section (specified insurance company); or

(v) Is an entity that is a holding company or treasury center (as described in paragraphs (e)(5)(i)(C) and (e)(5)(i)(D)(*1*) of this section) that—

(A) [Reserved] For further guidance, see § 1.1471–5T(e)(1)(v)(A).

(B) Is formed in connection with or availed of by a collective investment vehicle, mutual fund, exchange traded fund, private equity fund, hedge fund, venture capital fund, leveraged buyout fund, or any similar investment vehicle established with an investment strategy of investing, reinvesting, or trading in financial assets.

(2) *Banking or similar business*—(i) *In general.* Except as otherwise provided in paragraph (e)(2)(ii) of this section, an entity is considered to be engaged in a banking or similar business if, in the ordinary course of its business with customers, the entity accepts deposits or other similar investments of funds and regularly engages in one or more of the following activities—

(A) Makes personal, mortgage, industrial, or other loans or provides other extensions of credit;

(B) Purchases, sells, discounts, or negotiates accounts receivable, installment obligations, notes, drafts, checks, bills of exchange, acceptances, or other evidences of indebtedness;

(C) Issues letters of credit and negotiates drafts drawn thereunder;

(D) Provides trust or fiduciary services;

(E) Finances foreign exchange transactions; or

(F) Enters into, purchases, or disposes of finance leases or leased assets.

(ii) *Exception for certain lessors and lenders.* An entity is not considered to be engaged in a banking or similar business for purposes of this paragraph (e)(2) if the entity solely accepts deposits from persons as collateral or security pursuant to a sale or lease of property or pursuant to a similar financing arrangement between such entity and the person holding the deposit with the entity.

(iii) *Application of section 581.* Entities engaged in a banking or similar business include, but are not limited to, entities that would qualify as banks under section 585(a)(2) (including banks as defined in section 581 and any corporation to which section 581 would apply but for the fact that it is a foreign corporation).

(iv) *Effect of local regulation.* Whether an entity is subject to the banking and

credit laws of a foreign country, the United States, a State, a U.S. territory, or a subdivision thereof, or is subject to supervision and examination by agencies having regulatory oversight of banking or similar institutions, is relevant to, but not necessarily determinative of, whether that entity qualifies as a financial institution under section 1471(d)(5)(A). Whether an entity conducts a banking or similar business is determined based upon the character of the actual activities of such entity.

(3) *Holding financial assets for others as a substantial portion of its business*—(i) *Substantial portion*—(A) *In general.* An entity holds financial assets for the account of others as a substantial portion of its business if the entity's gross income attributable to holding financial assets and related financial services equals or exceeds 20 percent of the entity's gross income during the shorter of—

(*1*) The three-year period ending on December 31 of the year preceding the year in which the determination is made; or

(*2*) The period during which the entity has been in existence before the determination is made.

(B) *Special rule for start-up entities.* An entity with no operating history as of the date of the determination is considered to hold financial assets for the account of others as a substantial portion of its business if the entity expects to meet the gross income threshold described in paragraph (e)(3)(i)(B) of this section based on its anticipated functions, assets, and employees, with due consideration given to any purpose or functions for which the entity is licensed or regulated (including those of any predecessor).

(ii) [Reserved] For further guidance, see §1.1471–5T(e)(3)(ii).

(iii) *Effect of local regulation.* Whether an entity is subject to the banking and credit, broker-dealer, fiduciary, or other similar laws and regulations of the United States, a State, a U.S. territory, a political subdivision thereof, or a foreign country, or to supervision and examination by agencies having regulatory oversight of banks, credit issuers, or other financial institutions, is relevant to, but not necessarily determinative of, whether that entity holds financial assets for the account of others as a substantial portion of its business.

(4) *Investment entity*—(i) *In general.* The term *investment entity* means any entity that is described in paragraph (e)(4)(i)(A), (B), or (C) of this section.

(A) The entity primarily conducts as a business one or more of the following activities or operations for or on behalf of a customer—

(*1*) Trading in money market instruments (checks, bills, certificates of deposit, derivatives, etc.); foreign currency; foreign exchange, interest rate, and index instruments; transferable securities; or commodity futures;

(*2*) Individual or collective portfolio management; or

(*3*) Otherwise investing, administering, or managing funds, money, or financial assets on behalf of other persons.

(B) The entity's gross income is primarily attributable to investing, reinvesting, or trading in financial assets (as defined in paragraph (e)(4)(ii) of this section) and the entity is managed by another entity that is described in paragraph (e)(1)(i), (ii), (iv), or (e)(4)(i)(A) of this section. For purposes of this paragraph (e)(4)(i)(B), an entity is managed by another entity if the managing entity performs, either directly or through another third-party service provider, any of the activities described in paragraph (e)(4)(i)(A) of this section on behalf of the managed entity.

(C) The entity functions or holds itself out as a collective investment vehicle, mutual fund, exchange traded fund, private equity fund, hedge fund, venture capital fund, leveraged buyout fund, or any similar investment vehicle established with an investment strategy of investing, reinvesting, or trading in financial assets.

(ii) *Financial assets.* For purposes of this paragraph, the term *financial asset* means a security (as defined in section 475(c)(2) without regard to the last sentence thereof), partnership interest, commodity (as defined in section 475(e)(2)), notional principal contract (as defined in §1.446–3(c)), insurance contract or annuity contract, or any interest (including a futures or forward

contract or option) in a security, partnership interest, commodity, notional principal contract, insurance contract, or annuity contract.

(iii) *Primarily conducts as a business*—(A) *In general.* An entity is treated as primarily conducting as a business one or more of the activities described in paragraph (e)(4)(i)(A) of this section if the entity's gross income attributable to such activities equals or exceeds 50 percent of the entity's gross income during the shorter of—

(*1*) The three-year period ending on December 31 of the year preceding the year in which the determination is made; or

(*2*) The period during which the entity has been in existence.

(B) *Special rule for start-up entities.* An entity with no operating history as of the date of the determination is treated as primarily conducting as a business one or more of the activities described in paragraph (e)(4)(i)(A) of this section if such entity expects to meet the gross income threshold described in paragraph (e)(4)(iii)(A) of this section based on its anticipated functions, assets, and employees, with due consideration given to any purpose or functions for which the entity is licensed or regulated (including those of any predecessor).

(iv) *Primarily attributable to investing, reinvesting, or trading in financial assets*—(A) *In general.* An entity's gross income is primarily attributable to investing, reinvesting, or trading in financial assets for purposes of paragraph (e)(4)(i)(B) of this section if the entity's gross income attributable to investing, reinvesting, or trading in financial assets equals or exceeds 50 percent of the entity's gross income during the shorter of—

(*1*) The three-year period ending on December 31 of the year preceding the year in which the determination is made; or

(*2*) The period during which the entity has been in existence.

(B) *Special rule for start-up entities.* An entity with no operating history as of the date of the determination will be considered to have income that is primarily attributable to investing, reinvesting, or trading in financial assets for purposes of paragraph (e)(4)(i)(B) of this section if such entity expects to meet the income threshold described in paragraph (e)(4)(iv)(A) of this section based on its anticipated functions, assets, and employees, with due consideration given to any purpose or functions for which the entity is licensed or regulated (including those of any predecessor).

(v) *Examples.* The following examples illustrate the provisions of paragraph (e)(4) of this section:

Example 1. Investment advisor. Fund Manager is an investment entity within the meaning of paragraph (e)(4)(i)(A) of this section. Fund Manager, among its various business operations, organizes and manages a variety of funds, including Fund A, a fund that invests primarily in equities. Fund Manager hires Investment Advisor, a foreign entity, to provide advice and discretionary management of a portion of the financial assets held by Fund A. Investment Advisor earned more than 50% of its gross income for the last three years from providing similar services. Because Investment Advisor primarily conducts a business of managing financial assets on behalf of clients, Investment Advisor is an investment entity under paragraph (e)(4)(i)(A) of this section and an FFI under paragraph (e)(1)(iii) of this section.

Example 2. Entity that is managed by an FFI. The facts are the same as in *Example 1.* In addition, in every year since it was organized, Fund A has earned more than 50% of its gross income from investing in financial assets. Accordingly, Fund A is an investment entity under paragraph (e)(4)(i)(B) of this section because it is managed by Fund Manager and Investment Advisor and its gross income is primarily attributable to investing, reinvesting, or trading in financial assets.

Example 3. Investment manager. Investment Manager, a U.S. entity, is an investment entity within the meaning of paragraph (e)(4)(i)(A) of this section. Investment Manager organizes and registers Fund A in Country A. Investment Manager is authorized to facilitate purchases and sales of financial assets held by Fund A in accordance with Fund A's investment strategy. In every year since it was organized, Fund A has earned more than 50% of its gross income from investing, reinvesting, or trading in financial assets. Accordingly, Fund A is an investment entity under paragraph (e)(4)(i)(B) of this section and an FFI under paragraph (e)(1)(iii) of this section.

Example 4. Foreign real estate investment fund that is managed by an FFI. The facts are the same as in *Example 3,* except that Fund A's assets consist solely of non-debt, direct interests in real property located within and without the United States. Fund A is not an

investment entity under paragraph (e)(4)(i)(B) of this section, even though it is managed by Investment Manager, because less than 50% of its gross income is attributable to investing, reinvesting, or trading in financial assets.

Example 5. Trust managed by an individual. On January 1, 2013, X, an individual, establishes Trust A, a nongrantor foreign trust for the benefit of X's children, Y and Z. X appoints Trustee A, an individual, to act as the trustee of Trust A. Trust A's assets consists solely of financial assets, and its income consists solely of income from those financial assets. Pursuant to the terms of the trust instrument, Trustee A manages and administers the assets of the trust. Trustee A does not hire any entity as a third-party service provider to perform any of the activities described in paragraph (e)(4)(i)(A) of this section. Trust A is not an investment entity under paragraph (e)(4)(i)(B) of this section because it is managed solely by Trustee A, an individual.

Example 6. Trust managed by a trust company. The facts are the same as in *Example 5,* except that X hires Trust Company, an FFI, to act as trustee on behalf of Trust A. As trustee, Trust Company manages and administers the assets of Trust A in accordance with the terms of the trust instrument for the benefit of Y and Z. Because Trust A is managed by an FFI, Trust A is an investment entity under paragraph (e)(4)(i)(B) of this section and an FFI under paragraph (e)(1)(iii) of this section.

Example 7. [Reserved] For further guidance, see §1.1471–5T(e)(4)(v), *Example 7.*

Example 8. [Reserved] For further guidance, see §1.1471–5T(e)(4)(v), *Example 8.*

(5) *Exclusions.* A financial institution does not include an entity described in this paragraph, provided that the entity is not also described in paragraph (e)(1)(iv) of this section. For the treatment of foreign entities described in this paragraph under section 1472, see §1.1472–1(c)(1)(v).

(i) *Excepted nonfinancial group entities*—(A) *In general.* A foreign entity that is a member of a nonfinancial group (as defined in paragraph (e)(5)(i)(B) of this section) if—

(*1*) The entity is not a depository institution or custodial institution (other than for members of its expanded affiliated group);

(*2*) The entity is a holding company, treasury center, or captive finance company and substantially all the activities of such entity are to perform one or more of the functions described in paragraphs (e)(5)(i)(C), (D), or (E) of this section; and

(*3*) [Reserved] For further guidance, see §1.1471–5T(e)(5)(i)(A)(*3*).

(B) [Reserved] For further guidance, see §1.1471–5T(e)(5)(i)(B).

(*1*) [Reserved] For further guidance, see §1.1471–5T(e)(5)(i)(B)(*1*).

(*2*) Any member of the expanded affiliated group that is an FFI is either a participating FFI or deemed-compliant FFI.

(C) [Reserved] For further guidance, see §1.1471–5T(e)(5)(i)(C).

(D) *Treasury center*—(*1*) Except as otherwise provided in this paragraph, an entity is a treasury center for purposes of this paragraph (e)(5)(i) if the primary activity of such entity is to enter into investment, hedging, and financing transactions with or for members of its expanded affiliated group for purposes of—

(*i*) Managing the risk of price changes or currency fluctuations with respect to property that is held or to be held by the expanded affiliated group (or any member thereof);

(*ii*) Managing the risk of interest rate changes, price changes, or currency fluctuations with respect to borrowings made or to be made by the expanded affiliated group (or any member thereof);

(*iii*) Managing the risk of interest rate changes, price changes, or currency fluctuations with respect to assets or liabilities to be reflected in financial statements of the expanded affiliated group (or any member thereof);

(*iv*) [Reserved] For further guidance, see §1.1471–5T(e)(5)(i)(D)(*1*)(*iv*).

(*v*) [Reserved] For further guidance, see §1.1471–5T(e)(5)(i)(D)(*1*)(*v*).

(*2*) An entity is not a treasury center if any equity or debt interest in the entity is held by a person that is not a member of the entity's expanded affiliated group and the redemption or retirement amount or return earned on such interest is determined primarily by reference to—

(*i*) The investment, hedging, and financing activities of the treasury center with members outside of its expanded affiliated group; or

(*ii*) Any member of the group that is an investment entity described in (e)(4)(i)(B) or passive NFFE (as described in paragraph (b)(3)(vi) of this

section with respect to either such entity).

(E) *Captive finance company*. For purposes of this paragraph (e)(5)(i), an entity is a captive finance company if the primary activity of such entity is to enter into financing (including the extension of credit) or leasing transactions with or for suppliers, distributors, dealers, franchisees, or customers of such entity or of any member of such entity's expanded affiliated group that is an active NFFE.

(ii) *Excepted nonfinancial start-up companies or companies entering a new line of business*—(A) *In general*. A foreign entity that is investing capital in assets with the intent to operate a new business or line of business other than that of a financial institution or passive NFFE for a period of—

(*1*) In the case of an entity intending to operate a new business, 24 months from the initial organization of such entity; and

(*2*) In the case of an entity with the intent to operate a new line of business, 24 months from the date of the board resolution (or its equivalent) approving the new line of business, provided that such entity qualified as an active NFFE for the 24 months preceding the date of such approval.

(B) *Exception for investment funds*. An entity is not described in this paragraph (e)(5)(ii) if the entity functions (or holds itself out) as an investment fund, such as a private equity fund, venture capital fund, leveraged buyout fund, or any investment vehicle whose purpose is to acquire or fund companies and hold interests in those companies as capital assets for investment purposes.

(iii) *Excepted nonfinancial entities in liquidation or bankruptcy*. A foreign entity that was not a financial institution or passive NFFE at any time during the past five years and that is in the process of liquidating its assets or reorganizing with the intent to continue or recommence operations as a nonfinancial entity.

(iv) *Excepted inter-affiliate FFI*. A foreign entity that is a member of a participating FFI group if—

(A) The entity does not maintain financial accounts (other than accounts maintained for members of its expanded affiliated group);

(B) [Reserved] For further guidance, see § 1.1471–5T(e)(5)(iv)(B).

(C) The entity does not make withholdable payments to any person other than to members of its expanded affiliated group that are not limited FFIs or limited branches; and

(D) The entity has not agreed to report under § 1.1471–4(d)(2)(ii)(C) or otherwise act as an agent for chapter 4 purposes on behalf of any financial institution, including a member of its expanded affiliated group.

(v) *Section 501(c) entities*. A foreign entity that is described in section 501(c) other than an insurance company described in section 501(c)(15).

(vi) *Non-profit organizations*. A foreign entity that is established and maintained in its country of residence exclusively for religious, charitable, scientific, artistic, cultural or educational purposes if—

(A) The entity is exempt from income tax in its country of residence;

(B) The entity has no shareholders or members who have a proprietary or beneficial interest in its income or assets;

(C) Neither the laws of the entity's country of residence nor the entity's formation documents permit any income or assets of the entity to be distributed to, or applied for the benefit of, an individual or noncharitable entity other than pursuant to the conduct of the entity's charitable activities, or as payment of reasonable compensation for services rendered or the use of property, or as payment representing the fair market value of property that the entity has purchased; and

(D) The laws of the entity's country of residence or the entity's formation documents require that, upon the entity's liquidation or dissolution, all of its assets be distributed to an entity that meets the requirements of § 1.1471–6(b) or another organization that meets the requirements of this paragraph (e)(5)(vi) or escheat to the government of the entity's country of residence or any political subdivision thereof.

(6) *Reserving activities of an insurance company*. The reserving activities of an insurance company will not cause the company to be a financial institution

described in (e)(1)(i), (ii), or (iii) of this section.

(f) *Deemed-compliant FFIs.* The term *deemed-compliant FFI* includes a registered deemed-compliant FFI (as defined in paragraph (f)(1) of this section), a certified deemed-compliant FFI (as defined in paragraph (f)(2) of this section), and, to the extent provided in paragraph (f)(3) of this section, an owner-documented FFI. A deemed-compliant FFI will be treated pursuant to section 1471(b)(2) as having met the requirements of section 1471(b). A deemed-compliant FFI that complies with the due diligence and withholding requirements applicable to such entity as provided in this paragraph (f) will also be deemed to have met its withholding obligations under sections 1471(a) and 1472(a). For this purpose, an intermediary or flow-through entity that has a residual withholding obligation under § 1.1471–2(a)(2)(ii) must fulfill such obligation to be considered a deemed-compliant FFI.

(1) *Registered deemed-compliant FFIs.* A registered deemed-compliant FFI means an FFI that meets the procedural requirements described in paragraph (f)(1)(ii) of this section and that either is described in any of paragraphs (f)(1)(i)(A) through (F) of this section or is treated as a registered deemed-compliant FFI under a Model 2 IGA. A registered deemed-compliant FFI also includes any FFI, or branch of an FFI, that is a reporting Model 1 FFI that complies with the registration requirements of a Model 1 IGA.

(i) *Registered deemed-compliant FFI categories*—(A) *Local FFIs.* An FFI is described in this paragraph (f)(1)(i)(A) if the FFI meets the following requirements.

(*1*) The FFI is licensed and regulated as a financial institution under the laws of its country of incorporation or organization (which must be a FATF-compliant jurisdiction at the time the FFI registers for deemed-compliant status).

(*2*) The FFI does not have a fixed place of business outside its country of incorporation or organization. For this purpose, a fixed place of business does not include a location that is not advertised to the public and from which the FFI performs solely administrative support functions.

(*3*) The FFI does not solicit customers or account holders outside its country of incorporation or organization. For this purpose, an FFI will not be considered to have solicited customers or account holders outside its country of incorporation or organization merely because it operates a Web site, provided that the Web site does not specifically indicate that the FFI maintains accounts for or provides services to nonresidents, and does not otherwise target or solicit U.S. customers or account holders. An FFI will also not be considered to have solicited customers or account holders outside its country of incorporation or organization merely because it advertises in print media or on a radio or television station that is distributed or aired primarily within its country of incorporation or organization but is also incidentally distributed or aired in other countries, provided that the advertisement does not specifically indicate that the FFI maintains accounts for or provides services to nonresidents and does not otherwise target or solicit U.S. customers or account holders.

(*4*) The FFI is required under the laws of its country of incorporation or organization to identify resident account holders for purposes of either information reporting or withholding of tax with respect to accounts held by residents or is required to identify resident accounts for purposes of satisfying such country's AML due diligence requirements.

(*5*) At least 98 percent of the accounts by value maintained by the FFI as of the last day of the preceding calendar year are held by residents (including residents that are entities) of the country in which the FFI is incorporated or organized. An FFI that is incorporated or organized in a member state of the European Union may treat account holders that are residents (including residents that are entities) of other member states of the European Union as residents of the country in which the FFI is incorporated or organized for purposes of this calculation.

(*6*) [Reserved] For further guidance, see § 1.1471–5T(f)(1)(i)(A)(*6*).

(*7*) With respect to each preexisting account held by a nonresident of the country in which the FFI is organized or held by an entity, the FFI reviews those accounts in accordance with the procedures described in § 1.1471–4(c) applicable to preexisting accounts to identify any U.S. account or account held by a nonparticipating FFI, and certifies to the IRS that it did not identify any such account as a result of its review, that it has closed any such accounts that were identified or transferred them to a participating FFI, reporting Model 1 FFI, or U.S. financial institution, or that it agrees to withhold and report on such accounts as would be required under § 1.1471–4(b) and (d) if it were a participating FFI.

(*8*) In the case of an FFI that is a member of an expanded affiliated group, each FFI in the group is incorporated or organized in the same country and, with the exception of any member that is a retirement plan described in § 1.1471–6(f), meets the requirements set forth in this paragraph (f)(1)(i)(A) and the procedural requirements of paragraph (f)(1)(ii) of this section.

(*9*) The FFI does not have policies or practices that discriminate against opening or maintaining accounts for individuals who are specified U.S. persons and who are residents of the FFI's country of incorporation or organization.

(B) *Nonreporting members of participating FFI groups.* An FFI that is a member of a participating FFI group is described in this paragraph (f)(1)(i)(B) if it meets the following requirements.

(*1*) [Reserved] For further guidance, see § 1.1471–5T(f)(1)(i)(B)(*1*).

(*2*) The FFI reviews its accounts that were opened prior to the time it implements the policies and procedures (including time frames) described in paragraph (f)(1)(i)(B)(*1*) of this section, using the procedures described in § 1.1471–4(c) applicable to preexisting accounts of participating FFIs, to identify any U.S. account or account held by a nonparticipating FFI. Within six months of the identification of any account described in this paragraph, the FFI transfers the account to an affiliate that is a participating FFI, reporting Model 1 FFI, or U.S. financial institution, closes the account, or becomes a participating FFI.

(*3*) [Reserved] For further guidance, see § 1.1471–5T(f)(1)(i)(B)(*3*).

(C) *Qualified collective investment vehicles.* An FFI is described in this paragraph (f)(1)(i)(C) if it meets the following requirements.

(*1*) The FFI is an FFI solely because it is an investment entity, and it is regulated as an investment fund either in its country of incorporation or organization or in all of the countries in which it is registered and all of the countries in which it operates. A fund will be considered to be regulated as an investment fund under this paragraph if its manager is regulated with respect to the investment fund in all of the countries in which the investment fund is registered and in all of the countries in which the investment fund operates.

(*2*) [Reserved] For further guidance, see § 1.1471–5T(f)(1)(i)(C)(*2*).

(*3*) In the case of an FFI that is part of an expanded affiliated group, all other FFIs in the expanded affiliated group are participating FFIs, registered deemed-compliant FFIs, sponsored FFIs described in paragraph (f)(1)(i)(F)(*1*) or (*2*) of this section, nonreporting IGA FFIs, or exempt beneficial owners.

(D) *Restricted funds.* An FFI is described in this paragraph (f)(1)(i)(D) if it meets the following requirements.

(*1*) The FFI is an FFI solely because it is an investment entity, and it is regulated as an investment fund under the laws of its country of incorporation or organization (which must be a FATF-compliant jurisdiction at the time the FFI registers for deemed-compliant status) or in all of the countries in which it is registered and in all of the countries in which it operates. A fund will be considered to be regulated as an investment fund for purposes of this paragraph if its manager is regulated with respect to the fund in all of the countries in which the investment fund is registered and in all of the countries in which the investment fund operates.

(*2*) Interests issued directly by the fund are redeemed by or transferred by the fund rather than sold by investors on any secondary market. Notwithstanding the prior sentence, an FFI

will not be prohibited from qualifying as a restricted fund solely because it issued interests in bearer form provided that the FFI ceased issuing interests in bearer form after December 31, 2012, retires all such interests upon surrender, and establishes policies and procedures to redeem or immobilize all such interests prior to January 1, 2017, and that prior to payment the FFI documents the account holder in accordance with the procedures set forth in §1.1471–4(c) applicable to accounts other than preexisting accounts and agrees to withhold and report on such accounts as would be required under §1.1471–4(b) and (d) if it were a participating FFI. For purposes of this paragraph (f)(1)(i)(D), interests in the FFI that are issued by the fund through a transfer agent or distributor that does not hold the interests as a nominee of the account holder will be considered to have been issued directly by the fund.

(*3*) Interests that are not issued directly by the fund are sold only through distributors that are participating FFIs, registered deemed-compliant FFIs, nonregistering local banks described in paragraph (f)(2)(i) of this section, or restricted distributors described in paragraph (f)(4) of this section. For purposes of this paragraph (f)(1)(i)(D) and paragraph (f)(4) of this section, a distributor means an underwriter, broker, dealer, or other person who participates, pursuant to a contractual arrangement with the FFI, in the distribution of securities and holds interests in the FFI as a nominee.

(*4*) [Reserved] For further guidance, see §1.1471–5T(f)(1)(i)(D)(*4*).

(*5*) [Reserved] For further guidance, see §1.1471–5T(f)(1)(i)(D)(*5*).

(*6*) [Reserved] For further guidance, see §1.1471–5T(f)(1)(i)(D)(*6*).

(*7*) [Reserved] For further guidance, see §1.1471–5T(f)(1)(i)(D)(*7*).

(*i*) Does not open or maintain an account for, or make a withholdable payment to, any specified U.S. person, nonparticipating FFI, or passive NFFE with one or more substantial U.S. owners and, if it discovers any such accounts, closes all accounts for any such person within six months of the date that the FFI had reason to know the account holder became such a person; or

(*ii*) Withholds and reports on any account held by, or any withholdable payment made to, any specified U.S. person, nonparticipating FFI, or passive NFFE with one or more substantial U.S. owners to the extent and in the manner that would be required under §1.1471–4(b) and (d) if the FFI were a participating FFI.

(*8*) For an FFI that is part of an expanded affiliated group, all other FFIs in the expanded affiliated group are participating FFIs, registered deemed-compliant FFIs, sponsored FFIs described in paragraph (f)(2)(iii)(B) or (C) of this section, nonreporting IGA FFIs, or exempt beneficial owners.

(E) [Reserved] For further guidance, see §1.1471–5T(f)(1)(i)(E). through (f)(1)(i)(E)(*2*).

(F) *Sponsored investment entities and controlled foreign corporations.* An FFI is described in this paragraph (f)(1)(i)(F) if the FFI is described in paragraph (f)(1)(i)(F)(*1*) or (*2*) of this section and the sponsoring entity meets the requirements of paragraph (f)(1)(i)(F)(*3*) of this section.

(*1*) An FFI is a sponsored investment entity described in this paragraph (f)(1)(i)(F)(*1*) if—

(*i*) It is an investment entity that is not a QI, WP, or WT; and

(*ii*) [Reserved] For further guidance, see §1.1471–5T(f)(1)(i)(F)(*1*)(*ii*).

(*2*) An FFI is a sponsored controlled foreign corporation described in this paragraph (f)(1)(i)(F)(*2*) if the FFI meets the following requirements—

(*i*) The FFI is a controlled foreign corporation as defined in section 957(a) that is not a QI, WP, or WT;

(*ii*) The FFI is wholly owned, directly or indirectly, by a U.S. financial institution that agrees with the FFI to act as a sponsoring entity for the FFI; and

(*iii*) The FFI shares a common electronic account system with the sponsoring entity that enables the sponsoring entity to identify all account holders and payees of the FFI and to access all account and customer information maintained by the FFI including, but not limited to, customer identification information, customer documentation, account balance, and all

payments made to the account holder or payee.

(*3*) A sponsoring entity described in paragraph (f)(1)(i)(F)(*1*)(*ii*) or (f)(1)(i)(F)(*2*)(*ii*) of this section meets the requirements of this paragraph (f)(1)(i)(F)(*3*) if the sponsoring entity—

(*i*) Is authorized to act on behalf of the FFI (such as a fund manager, trustee, corporate director, or managing partner) to fulfill the requirements of the FFI agreement;

(*ii*) Has registered with the IRS as a sponsoring entity;

(*iii*) Has registered the FFI with the IRS by the later of January 1, 2016, or the date that the FFI identifies itself as qualifying under this paragraph (f)(1)(i)(F);

(*iv*) Agrees to perform, on behalf of the FFI, all due diligence, withholding, reporting, and other requirements that the FFI would have been required to perform if it were a participating FFI;

(*v*) [Reserved] For further guidance, see § 1.1471–5T(f)(1)(i)(F)(*3*)(*v*).

(*vi*) [Reserved] For further guidance, see § 1.1471–5T(f)(1)(i)(F)(*3*)(*vi*).

(*vii*) [Reserved] For further guidance, see § 1.1471–5T(f)(1)(i)(F)(*3*)(*vii*).

(*4*) The IRS may revoke a sponsoring entity's status as a sponsor with respect to all sponsored FFIs if there is a material failure by the sponsoring entity to comply with its obligations under paragraph (f)(1)(i)(F)(*3*) of this section with respect to any sponsored FFI.

(*5*) [Reserved] For further guidance, see § 1.1471–5T(f)(1)(i)(F)(*5*).

(ii) *Procedural requirements for registered deemed-compliant FFIs.* A registered deemed-compliant FFI described in paragraph (f)(1)(i)(A) through (E) of this section may use one or more agents to perform the necessary due diligence to identify its account holders and to take any required action associated with obtaining and maintaining its deemed-compliant status. The FFI, however, remains responsible for ensuring that the requirements for its deemed-compliant status are met. Unless otherwise provided in this section, a registered deemed-compliant FFI described in paragraph (f)(1)(i)(A) through (E) of this section is required to—

(A) Register with the IRS pursuant to procedures prescribed by the IRS and agree to comply with the terms of its registered deemed-compliant status.

(B) [Reserved] For further guidance, see § 1.1471–5T(f)(1)(ii)(B).

(C) Maintain in its records the confirmation from the IRS of the FFI's registration as a deemed-compliant FFI and GIIN or such other information as the IRS specifies in forms or other guidance; and

(D) Agree to notify the IRS if there is a change in circumstances that would make the FFI ineligible for the deemed-compliant status for which it has registered, and to do so within six months of the change in circumstances unless the FFI is able to resume its eligibility for its registered-deemed compliant status within the six month notification period.

(iii) *Deemed-compliant FFI that is merged or acquired.* A deemed-compliant FFI that becomes a participating FFI or a member of a participating FFI group as a result of a merger or acquisition will not be required to redetermine the chapter 4 status of any account maintained by the FFI prior to the date of the merger or acquisition unless that account has a subsequent change in circumstances.

(2) [Reserved] For further guidance, see § 1.1471–5T(f)(2).

(i) *Nonregistering local bank.* An FFI is described in this paragraph (f)(2)(i) if the FFI meets the following requirements.

(A) The FFI operates solely as (and is licensed and regulated under the laws of its country of incorporation or organization as)—

(*1*) A bank; or

(*2*) A credit union or similar cooperative credit organization that is operated without profit.

(B) [Reserved] For further guidance, see § 1.1471–5T(f)(2)(i)(B).

(C) The FFI does not have a fixed place of business outside its country of incorporation or organization. For this purpose, a fixed place of business does not include a location that is not advertised to the public and from which the FFI performs solely administrative support functions.

(D) The FFI does not solicit customers or account holders outside its

country of incorporation or organization. For this purpose, an FFI will not be considered to have solicited customers or account holders outside its country of incorporation or organization merely because it operates a Web site, provided that the Web site does not permit account opening, does not indicate that the FFI maintains accounts for or provides services to nonresidents, and does not otherwise target or solicit U.S. customers or account holders. An FFI will also not be considered to have solicited customers or account holders outside its country of incorporation or organization merely because it advertises in print media or on a radio or television station that is distributed or aired primarily within its country of incorporation or organization but is also incidentally distributed or aired in other countries, provided that the advertisement does not indicate that the FFI maintains accounts for or provides services to nonresidents and does not otherwise target or solicit U.S. customers or account holders.

(E) The FFI does not have more than $175 million in assets on its balance sheet and, if the FFI is a member of an expanded affiliated group, the group does not have more than $500 million in total assets on its consolidated or combined balance sheets.

(F) With respect to an FFI that is part of an expanded affiliated group, each member of the expanded affiliated group is incorporated or organized in the same country and does not have a fixed place of business outside of that country. For this purpose, a fixed place of business does not include a location that is not advertised to the public and from which the FFI performs solely administrative support functions. Further, each FFI in the group, other than an FFI described in paragraph (f)(2)(ii) of this section or § 1.1471–6(f), meets the requirements set forth in this paragraph (f)(2)(i). For this purpose, a fixed place of business does not include a location that is not advertised to the public and from which the FFI performs solely administrative support functions.

(ii) *FFIs with only low-value accounts.* An FFI is described in this paragraph (f)(2)(ii) if the FFI meets the following requirements:

(A) The FFI is not an investment entity.

(B) No financial account maintained by the FFI (or, in the case of an FFI that is a member of an expanded affiliated group, by any member of the expanded affiliated group) has a balance or value in excess of $50,000. The balance or value of a financial account shall be determined by applying the rules described in paragraph (b)(4) of this section, substituting the term *financial account* for the term *depository account* and the term *person* for the term *individual.*

(C) The FFI does not have more than $50 million in assets on its balance sheet as of the end of its most recent accounting year. In the case of an FFI that is a member of an expanded affiliated group, the entire expanded affiliated group does not have more than $50 million in assets on its consolidated or combined balance sheet as of the end of its most recent accounting year.

(iii) [Reserved] For further guidance, see § 1.1471–5T(f)(2)(iii) through (f)(2)(iii)(E).

(iv) [Reserved] For further guidance, see § 1.1471–5T(f)(2)(iv) through (f)(2)(iv)(E).

(F) [Reserved] For further guidance, see § 1.1471–5T(f)(2)(iv)(F).

(v) [Reserved] For further guidance, see § 1.1471–5T(f)(2)(v) through (f)(2)(v)(B).

(3) *Owner-documented FFIs*—(i) *In general.* An owner-documented FFI means an FFI that meets the requirements of paragraph (f)(3)(ii) of this section. An FFI may only be treated as an owner-documented FFI with respect to payments received from and accounts held with a designated withholding agent (or with respect to payments received from and accounts held with another FFI that is also treated as an owner-documented FFI by such designated withholding agent). A designated withholding agent is a U.S. financial institution, participating FFI, or reporting Model 1 FFI that agrees to undertake the additional due diligence and reporting required under paragraphs (f)(3)(ii)(D) and (E) of this section in

order to treat the FFI as an owner-documented FFI. An FFI meeting the requirements of this paragraph (f)(3) will only be treated as a deemed-compliant FFI with respect to a payment or account for which it does not act as an intermediary.

(ii) *Requirements of owner-documented FFI status.* An FFI meets the requirements of this paragraph (f)(3)(ii) only if—

(A) The FFI is an FFI solely because it is an investment entity;

(B) The FFI is not owned by or in an expanded affiliated group with any FFI that is a depository institution, custodial institution, or specified insurance company;

(C) The FFI does not maintain a financial account for any nonparticipating FFI;

(D) The FFI provides the designated withholding agent with all of the documentation described in §1.1471–3(d)(6) and agrees to notify the withholding agent if there is a change in circumstances; and

(E) The designated withholding agent agrees to report to the IRS (or, in the case of a reporting Model 1 FFI, to the relevant foreign government or agency thereof) all of the information described in §1.1471–4(d) or §1.1474–1(i) (as appropriate) with respect to any specified U.S. persons that are identified in §1.1471–3(d)(6)(iv)(A)(*1*) and (*2*). Notwithstanding the previous sentence, the designated withholding agent is not required to report information with respect to an indirect owner of the FFI that holds its interest through a participating FFI, a deemed-compliant FFI (other than an owner-documented FFI), an entity that is a U.S. person, an exempt beneficial owner, or an excepted NFFE.

(4) *Definition of a restricted distributor.* An entity is a restricted distributor for purposes of paragraph (f)(1)(i)(D) of this section (relating to registered deemed-compliant restricted funds) if it operates as a distributor that holds debt or equity interests in a restricted fund as a nominee and meets the following requirements.

(i) [Reserved] For further guidance, see §1.1471–5T(f)(4)(i).

(ii) The distributor is required to perform AML due diligence procedures under the anti-money laundering laws of its country of incorporation or organization (which must be a FATF-compliant jurisdiction).

(iii) The distributor operates solely in its country of incorporation or organization, does not have a fixed place of business outside that country, and, if such distributor belongs to an expanded affiliated group, has the same country of incorporation or organization as all other members of its expanded affiliated group. For this purpose, a fixed place of business does not include a location that is not advertised to the public and from which the FFI performs solely administrative support functions.

(iv) The distributor does not solicit customers or account holders outside its country of incorporation or organization. For this purpose, a distributor will not be considered to have solicited customers or account holders outside its country of organization merely because it operates a Web site, provided that the Web site does not permit account opening by persons identified as nonresidents, does not specifically state that nonresidents may acquire securities from the distributor, and does not otherwise target U.S. customers or account holders. A distributor will also not be considered to have solicited customers or account holders outside its country of incorporation or organization merely because it advertises in print media or on a radio or television station that is distributed or aired primarily within its country of incorporation or organization but is also incidentally distributed or aired in other countries, provided that the advertisement does not indicate that the distributor maintains accounts for or provides services to nonresidents and does not otherwise target or solicit U.S. customers or account holders.

(v) The distributor does not have more than $175 million in total assets under management and has no more than $7 million in gross revenue on its income statement for the most recent financial accounting year and, if the distributor belongs to an expanded affiliated group, the entire group does not have more than $500 million in total assets under management or

more than $20 million in gross revenue for its most recent financial accounting year on a combined or consolidated income statement.

(vi) The distributor provides the restricted fund (or another distributor of the restricted fund that is a participating FFI or registered deemed-compliant FFI, and with which the distributor has entered into its distribution agreement) with a valid Form W–8 indicating that the distributor satisfies the requirements to be a restricted distributor.

(vii) The agreement governing the distributor's distribution of debt or equity interests of the restricted fund—

(A) Prohibits the distributor from distributing any securities to specified U.S. persons, passive NFFEs that have one or more substantial U.S. owners, and nonparticipating FFIs;

(B) Requires that if the distributor does distribute securities to any of the persons described in this paragraph (f)(4)(vii), it will cause the restricted fund to redeem or retire those interests, or it will transfer those interests to a distributor that is a participating FFI or reporting Model 1 FFI, within six months and the commission paid to the distributor will be forfeited to the restricted fund or to the participating FFI to which those interests are transferred; and

(C) Requires the distributor to notify the restricted fund (or another distributor of the restricted fund that is a participating FFI, reporting Model 1 FFI, or registered deemed-compliant FFI and with which the distributor has entered into its distribution agreement) of a change in the distributor's chapter 4 status within 90 days of the change in status.

(viii) With respect to sales after December 31, 2011, and prior to the time the restrictions described in paragraph (f)(4)(vii) of this section were incorporated into the distribution agreement, either the agreement governing the distributor's distribution of debt or equity interests of the relevant FFI contained a prohibition of the sale of such securities to U.S. entities or U.S. resident individuals, or the distributor reviews all accounts relating to such sales in accordance with the procedures (and time frames) described in § 1.1471–4(c) applicable to preexisting accounts and certifies that it has caused the restricted fund to redeem or retire, or it has transferred all securities sold to any of the persons described in paragraph (f)(4)(vii) of this section. If the distribution agreement addressed in the prior sentence contained only a prohibition on the sale of securities to U.S. resident individuals, the distributor will not be required to review the individual accounts relating to such sales but must review and make certifications with respect to all entity accounts in the manner described in the previous sentence.

(g) *Recalcitrant account holders*—(1) *Scope*. This paragraph (g) provides rules for determining when an account holder of a participating FFI or registered deemed-compliant FFI is a recalcitrant account holder. Paragraph (g)(2) of this section defines the term recalcitrant account holder. Paragraphs (g)(3) and (4) of this section provide timing rules for when an account holder will begin to be treated as a recalcitrant account holder by a participating FFI and when an account holder will cease to be treated as a recalcitrant account holder by such institution. For rules for determining the holder of an account, see paragraph (a)(3) of this section. For the withholding requirements of an FFI with respect to its recalcitrant account holders, see paragraph (f) of this section and § 1.1471–4(b). For the reporting requirements of an FFI with respect to its recalcitrant account holders, see § 1.1471–4(d)(6), and, for the reporting required with respect to payments made to such account holders, see § 1.1474–1(d)(4)(iii). The rules provided in this paragraph (g) to classify certain account holders as recalcitrant account holders shall not, however, apply to a U.S. branch of a participating FFI. Instead, a U.S. branch of a participating FFI or registered deemed-compliant FFI that is treated as a U.S. person shall apply the presumption rules of § 1.1471–3(f) (for foreign entity account holders) and chapter 3 or 61 (for individual payees) to determine the status of a payee if it cannot reliably associate a reportable payment made to the payee with valid documentation.

(2) *Recalcitrant account holder*. The term *recalcitrant account holder* means

any holder of an account maintained by an FFI if such account holder is not an FFI (or presumed to be an FFI under §1.1471–3(f)), the account does not meet the requirements of the exception to U.S. account status described in paragraph (a)(4) of this section (for depository accounts with a balance of $50,000 or less) and does not qualify for any of the exceptions from the documentation requirements described in §1.1471–4(c)(3)(iii), (c)(4)(iii), (c)(5)(iii), (c)(5)(iv)(E) (or the participating FFI elects to forego such exceptions) and—

(i) The account holder fails to comply with requests by the FFI for the documentation or information that is required under §1.1471–4(c) for determining the status of such account as a U.S. account or other than a U.S. account;

(ii) The account holder fails to provide a valid Form W–9 upon request from the FFI or fails to provide a correct name and TIN combination upon request from the FFI when the FFI has received notice from the IRS indicating that the name and TIN combination reported by the FFI for the account holder is incorrect;

(iii) If foreign law would (but for a waiver) prevent reporting by the FFI (or branch or division thereof) of the information described in §1.1471–4(d)(3) or (5) with respect to such account, the account holder (or substantial U.S. owner of an account holder that is a U.S. owned foreign entity) fails to provide a valid and effective waiver to permit such reporting; or

(iv) The account holder provides the documentation described in §1.1471–3(d)(12) to establish its status as a passive NFFE (other than a WP or WT) but fails to provide the information regarding its owners required under §1.1471–3(d)(12)(iii).

(3) *Start of recalcitrant account holder status*—(i) *Preexisting accounts identified under the procedures described in §1.1471–4(c) for identifying U. S. accounts*—(A) *In general.* An account holder of a preexisting account described in paragraph (g)(2) of this section maintained by a participating FFI will be treated as a recalcitrant account holder beginning on the dates provided in paragraphs (g)(3)(B) through (D) of this section. An account holder of a preexisting account described in paragraph (g)(2) of this section that is maintained by a registered deemed-compliant FFI will be treated as a recalcitrant account holder beginning on the dates provided in paragraph (f) of this section (setting forth the time by which the FFI must identify its accounts in accordance with the requirements of §1.1471–4(c) in order to meet the requirements of its applicable registered deemed-compliant status).

(B) *Accounts other than high-value accounts.* Account holders of preexisting accounts maintained by a participating FFI that are not high-value accounts (as described in §1.1471–4(c)(5)(iv)(D)) and that are described in paragraph (g)(2) of this section will be treated as recalcitrant account holders beginning on the date that is two years after the effective date of the FFI agreement.

(C) *High-value accounts.* Account holders of preexisting accounts maintained by a participating FFI that are high-value accounts (as described in §1.1471–4(c)(5)(iv)(D)) and that are described in paragraph (g)(2) of this section will be treated as recalcitrant account holders beginning on the date that is one year after the effective date of the FFI agreement.

(D) [Reserved] For further guidance, see §1.1471–5T(g)(3)(i)(D).

(ii) *Accounts that are not preexisting accounts and accounts requiring name/TIN correction.* An account holder of an account other than a preexisting account and that is described in paragraph (g)(2) of this section will be treated as a recalcitrant account holder beginning on the date that is the earlier of 90 days after the account is opened by the participating FFI or the date that a withholdable payment that is subject to withholding under §1.1441–2(a) is made to the account. An account holder for which the participating FFI received a notice from the IRS indicating that the name and TIN combination provided for the account holder is incorrect will be treated as a recalcitrant account holder following the date of such notice within the time prescribed in §31.3406(d)–5(a) of this chapter.

(iii) *Accounts with changes in circumstances.* An account holder holding

an account that is described in paragraph (g)(2) of this section following a change in circumstances (other than a change in account balance or value in a subsequent year that causes an individual account to be identified as a high-value account) will be treated as a recalcitrant account holder beginning on the date that is 90 days after the change in circumstances. For the definition of a change in circumstances with respect to an account, see § 1.1471–4(c)(2)(iii).

(4) *End of recalcitrant account holder status.* An account holder that is treated as a recalcitrant account holder under paragraphs (g)(2) and (3) of this section will cease to be so treated as of the date on which the account holder is no longer described in paragraph (g)(2) of this section.

(h) *Passthru payment*—(1) *Defined.* The term *passthru payment* means any withholdable payment and any foreign passthru payment.

(2) *Foreign passthru payment.* [Reserved]

(i) [Reserved] For further guidance, see § 1.1471–5T(i) through (i)(10).

(j) [Reserved] For further guidance, see § 1.1471–5T(j).

(k) [Reserved] For further guidance, see § 1.1471–5T(k).

(l) *Effective/applicability date.* This section generally applies on January 28, 2013. For other dates of applicability, see § 1.1471–5(f)(2)(iv).

[T.D. 9610, 78 FR 5961, Jan. 28, 2013; 78 FR 55207, Sept. 10, 2013, as amended by T.D. 9657, 79 FR 12849, Mar. 6, 2014]

§ 1.1471–5T Definitions applicable to section 1471 (temporary).

(a) [Reserved] For further guidance, see § 1.1471–5(a).

(1) through (2) [Reserved] For further guidance, see § 1.1471–5(a)(1) through (2).

(3) [Reserved] For further guidance, see § 1.1471–5(a)(3).

(i) *In general.* Except as otherwise provided in this paragraph (a)(3), the *account holder* is the person listed or identified as the holder or owner of the account with the FFI that maintains the account, regardless of whether such person is a flow-through entity. Thus, for example, except as otherwise provided in paragraph (a)(3)(ii) of this section, if a trust (including a simple or grantor trust) or an estate is listed as the holder or owner of a financial account, the trust or estate is the account holder, rather than its owners or beneficiaries. Similarly, except as otherwise provided in this paragraph (a)(3), if a partnership is listed as the holder or owner of a financial account, the partnership is the account holder, rather than the partners in the partnership. In the case of an account held by an entity that is disregarded for U.S. federal tax purposes under § 301.7701–2(c)(2)(i), the account shall be treated as held by the person owning such entity. With respect to an account held by an exempt beneficial owner, such account is treated as held by an exempt beneficial owner only when all payments made to such account would be treated as made to an exempt beneficial owner. See § 1.1471–6(h) for when a payment derived from certain commercial activities is not treated as made to an exempt beneficial owner.

(ii) [Reserved] For further guidance, see § 1.1471–5(a)(3)(ii).

(iii) [Reserved] For further guidance, see § 1.1471–5(a)(3)(iii).

(iv) [Reserved] For further guidance, see § 1.1471–5(a)(3)(iv).

(v) [Reserved] For further guidance, see § 1.1471–5(a)(3)(v).

(4) [Reserved] For further guidance, see § 1.1471–5(a)(4).

(i) *Exception for certain individual accounts of participating FFIs.* Unless a participating FFI elects under paragraph (a)(4)(ii) of this section not to apply this paragraph (a)(4)(i), the term U.S. account shall not include any depository account maintained by such financial institution during a calendar year if the account is held solely by one or more individuals and, with respect to each holder of such account, the aggregate balance or value of all depository accounts held by each such individual does not exceed $50,000 as of the end of the calendar year or on the date the account is closed. For rules for determining the account balance or value, see paragraphs (a)(3)(iii) and (b)(4) of this section.

(ii) [Reserved] For further guidance, see § 1.1471–5(a)(4)(ii).

(iii) [Reserved] For further guidance, see § 1.1471–5(a)(4)(iii).

(b) [Reserved] For further guidance, see § 1.1471–5(b).

(1) [Reserved] For further guidance, see § 1.1471–5(b)(1).

(i) through (ii) [Reserved] For further guidance, see § 1.1471–5(b)(1)(i) through (ii).

(iii) [Reserved] For further guidance, see § 1.1471–5(b)(1)(iii).

(A) [Reserved] For further guidance, see § 1.1471–5(b)(1)(iii)(A).

(B) [Reserved] For further guidance, see § 1.1471–5(b)(1)(iii)(B).

(*1*) [Reserved] For further guidance, see § 1.1471–5(b)(1)(iii)(B)(*1*).

(*2*) The return earned on the interest is determined, directly or indirectly, primarily by reference to one or more investment entities described in paragraph (e)(4)(i)(B) or (C) of this section or one or more passive NFFEs that are members of the entity's expanded affiliated group (as determined under paragraph (b)(3)(vi) of this section);

(*3*) through (*4*) [Reserved] For further guidance, see § 1.1471–5(b)(1)(iii)(B)(*3*) through (*4*).

(C) [Reserved] For further guidance, see § 1.1471–5(b)(1)(iii)(C) through (b)(1)(iii)(C)(*2*).

(iv) [Reserved] For further guidance, see § 1.1471–5(b)(1)(iv).

(2) [Reserved] For further guidance, see § 1.1471–5(b)(2) through (b)(2)(vi).

(3) [Reserved] For further guidance, see § 1.1471–5(b)(3).

(i) through (iii) [Reserved] For further guidance, see § 1.1471–5(b)(3)(i) through (b)(3)(iii)(B)(*3*).

(iv) *Regularly traded on an established securities market.* To determine if debt or equity interests described in paragraph (b)(1)(iii) of this section are regularly traded, the principles of § 1.1472–1(c)(1)(i)(A)(*2*)(*i*) and (*ii*) shall apply with respect to the interests, and the principles of § 1.1472–1(c)(1)(i)(B)(*1*) shall apply for this purpose in the case of an initial public offering of such interests. See § 1.1472–1(c)(1)(i)(C) for the definition of an established securities market. For purposes of paragraph (b)(1)(iii) of this section, an interest is not regularly traded on an established securities market if the holder of the interest (excluding a financial institution acting as an intermediary) is registered on the books of the investment entity. The preceding sentence shall not apply to the extent a holder's interest is registered prior to July 1, 2014, on the books of the investment entity.

(v) [Reserved] For further guidance, see § 1.1471–5(b)(3)(v).

(A) *Equity interest.* The value of an equity interest is determined, directly or indirectly, primarily by reference to assets that give rise (or could give rise) to withholdable payments if the return earned on such interest (including upon a sale, exchange, or redemption) is determined primarily by reference to profits or assets of a U.S. person or equity interests in a U.S. person.

(B) [Reserved] For further guidance, see § 1.1471–5(b)(3)(v)(B).

(*1*) Debt is convertible into equity interests in a U.S. person; or

(*2*) The return earned on such interest (including upon a sale, exchange, or redemption) is determined primarily by reference to profits or assets of a U.S. person or equity interests in a U.S. person.

(vi) *Return earned on the interest (including upon a sale, exchange, or redemption) determined, directly or indirectly, primarily by reference to one or more investment entities or passive NFFEs.*

(A) *Equity interest.* The return earned on an equity interest is determined, directly or indirectly, primarily by reference to one or more investment entities described in paragraph (e)(4)(i)(B) or (C) of this section or passive NFFEs that are members of the entity's expanded affiliated group if the return on such interest (including upon a sale, exchange, or redemption) is determined primarily by reference to profits or assets of, or equity interests in, one or more investment entities described in paragraph (e)(4)(i)(B) or (C) of this section or passive NFFEs that are members of the entity's expanded affiliated group.

(B) *Debt interest.* The return earned on a debt interest is determined, directly or indirectly, primarily by reference to one or more investment entities described in paragraph (e)(4)(i)(B) or (C) of this section or passive NFFEs that are members of the entity's expanded affiliated group if—

(*1*) Debt is convertible into equity interests in one or more investment entities described in paragraph (e)(4)(i)(B) or (C) of this section or passive NFFEs

that are members of the entity's expanded affiliated group; or

(*2*) The return on such interest (including upon a sale, exchange, or redemption) is determined primarily by reference to profits or assets of, or equity interests in, one or more investment entities described in paragraph (e)(4)(i)(B) or (C) of this section or passive NFFEs that are members of the entity's expanded affiliated group.

(vii) [Reserved] For further guidance, see §1.1471–5(b)(3)(vii) through (b)(3)(vii)(D)(*3*).

(4) through (5) [Reserved] For further guidance, see §1.1471–5(b)(4) through (5).

(c) *U.S. owned foreign entity*. The term *U.S. owned foreign entity* means any foreign entity that has one or more substantial U.S. owners (as defined in §1.1473–1(b)). See §1.1473–1(e) for the definition of foreign entity for purposes of chapter 4. For the requirements applicable to determining direct and indirect ownership in an entity, see §1.1473–1(b)(2).

(d) [Reserved] For further guidance, see §1.1471–5(d).

(e) [Reserved] For further guidance, see §1.1471–5(e).

(1) [Reserved] For further guidance, see §1.1471–5(e)(1).

(i) through (iv) [Reserved] For further guidance, see §1.1471–5(e)(1)(i) through (iv).

(v) [Reserved] For further guidance, see §1.1471–5(e)(1)(v).

(A) Is part of an expanded affiliated group that includes a depository institution, custodial institution, specified insurance company, or investment entity described in paragraphs (e)(4)(i)(B) or (C) of this section; or

(B) [Reserved] For further guidance, see §1.1471–5(e)(1)(v)(B).

(2) [Reserved] For further guidance, see §1.1471–5(e)(2) through (e)(2)(iv).

(3) [Reserved] For further guidance, see §1.1471–5(e)(3).

(i) [Reserved] For further guidance, see §1.1471–5(e)(3)(i) through (e)(3)(i)(B).

(ii) *Income attributable to holding financial assets and related financial services*. For purposes of this paragraph (e)(3), the term *income attributable to holding financial assets and related financial services* means custody, account maintenance, and transfer fees; commissions and fees earned from executing and pricing securities transactions; income earned from extending credit to customers with respect to financial assets held in custody by the entity (or acquired through such extension of credit); income earned on the bid-ask spread of financial assets; fees for providing financial advice with respect to financial assets held in (or potentially to be held in) custody by the entity; and fees for clearance and settlement services.

(iii) [Reserved] For further guidance, see §1.1471–5(e)(3)(iii).

(4) [Reserved] For further guidance, see §1.1471–5(e)(4).

(i) through (iv) [Reserved] For further guidance, see §1.1471–5(e)(4)(i) through (e)(4)(iv)(B).

(v) [Reserved] For further guidance, see §1.1471–5(e)(4)(v).

Example 1 through *Example 6*. [Reserved] For further guidance, see §1.1471–5(e)(4)(v), *Example 1* through *Example 6*.

Example 7. Individual introducing broker. IB, an individual introducing broker, primarily conducts a business of providing advice to clients, has discretionary authority to manage clients' assets, and uses the services of a foreign entity to conduct and execute trades on behalf of clients. IB provides services as an investment advisor and manager to Entity, a foreign corporation. Entity has earned 50% or more of its gross income for the past three years from investing, reinvesting, or trading in financial assets. Because IB is an individual, notwithstanding that IB primarily conducts certain investment-related activities, IB is not an investment entity under paragraph (e)(4)(i)(A) of this section. Further, Entity is not an investment entity under paragraph (e)(4)(i)(B) of this section because Entity is managed by IB, an individual.

Example 8. Entity introducing broker. IB, a foreign entity introducing broker, primarily conducts a business of providing advice to clients, has discretionary authority to manage clients' assets, and uses the services of a foreign entity to conduct and execute trades on behalf of clients. IB provides its services as an investment advisor and manager to Entity, a foreign corporation. Entity has earned 50% or more of its gross income for the past three years from investing, reinvesting, or trading in financial assets. Because IB is an entity that primarily conducts certain investment-related activities, IB is an investment entity under paragraph (e)(4)(i)(A) of this section. Further, Entity is an investment entity under paragraph (e)(4)(i)(B) of this section because it is managed by IB, an investment entity that performs certain of the activities described in

paragraph (e)(4)(i)(A) of this section on behalf of Entity.

(5) [Reserved] For further guidance, see § 1.1471–5(e)(5).

(i) [Reserved] For further guidance, see § 1.1471–5(e)(5)(i).

(A) [Reserved] For further guidance, see § 1.1471–5(e)(5)(i)(A).

(*1*) through (*2*) [Reserved] For further guidance, see § 1.1471–5(e)(5)(i)(A)(*1*) through (*2*).

(*3*) The entity does not hold itself out as (and was not formed in connection with or availed of by) an arrangement or investment vehicle that is a private equity fund, venture capital fund, leveraged buyout fund, or any similar investment vehicle established with an investment strategy to acquire or fund companies and to treat the interests in those companies as capital assets held for investment purposes. For purposes of determining whether an entity was formed in connection with or availed of by such an arrangement or investment vehicle, any entity that existed at least six months prior to its acquisition by such arrangement or investment vehicle and that, prior to the acquisition, regularly conducted activities in the ordinary course of business will not be considered to have been formed in connection with or availed of by the arrangement or investment vehicle, in the absence of other facts suggesting the existence of an investment strategy described in the prior sentence.

(B) *Nonfinancial group.* An expanded affiliated group defined in § 1.1471–5(i)(2) is a *nonfinancial group* if, taking into account the application of this section—

(*1*) For the three-year period (or the period during which the expanded affiliated group has been in existence, if shorter) ending on December 31 of the year preceding the year in which the determination is made, no more than 25 percent of the gross income of the expanded affiliated group (excluding income derived by any member that is an entity described in paragraph (e)(5)(ii) or (iii) of this section and income derived from transactions between members of the expanded affiliated group) consists of passive income (as defined in § 1.1472–1(c)(1)(iv)); no more than five percent of the gross income of the expanded affiliated group is derived by members of the expanded affiliated group that are FFIs (excluding income derived from transactions between members of the expanded affiliated group or by any member of the expanded affiliated group that is a certified deemed-compliant FFI); and no more than 25 percent of the value of assets held by the expanded affiliated group (excluding assets held by a member that is an entity described in paragraph (e)(5)(ii) or (iii) of this section and assets resulting from transactions between related members of the expanded affiliated group) are assets that produce or are held for the production of passive income; and

(*2*) [Reserved] For further guidance, see § 1.1471–5(e)(5)(i)(B)(*2*).

(C) *Holding company.* For purposes of this paragraph (e)(5)(i), an entity is a holding company if its primary activity consists of holding (directly or indirectly) all or part of the outstanding stock of one or more members of its expanded affiliated group. A partnership or any other non-corporate entity shall be treated as a holding company if substantially all the activities of such partnership (or other entity) consist of holding more than 50 percent of the voting power and value of the stock of one or more common parent corporation(s) of one or more expanded affiliated group(s). If a partnership or other non-corporate entity owns more than 50 percent of the voting power and value of the stock of more than one common parent corporation of an expanded affiliated group, each common parent corporation's expanded affiliated group will be treated as a separate expanded affiliated group for purposes of applying the rules of this section unless a non-corporate entity is treated as the common parent entity of the expanded affiliated group in accordance with § 1.1471–5(i)(10).

(D) [Reserved] For further guidance, see § 1.1471–5(e)(5)(i)(D).

(*1*) [Reserved] For further guidance, see § 1.1471–5(e)(5)(i)(D)(*1*).

(*i*) through (*iii*) [Reserved] For further guidance, see § 1.1471–5(e)(5)(i)(D)(*1*)(*i*) through (*iii*).

(*iv*) Managing the working capital of the expanded affiliated group (or any member thereof) such as by pooling the

cash balances of affiliates (including both positive and deficit cash balances) or by investing or trading in financial assets solely for the account and risk of such entity or any member of its expanded affiliated group; or

(*v*) Acting as a financing vehicle for the expanded affiliated group (or any member thereof).

(*2*) [Reserved] For further guidance, see §1.1471–5(e)(5)(i)(D)(*2*).

(*i*) through (*ii*) [Reserved] For further guidance, see §1.1471–5(e)(5)(i)(D)(*2*)(*i*) through (*ii*).

(E) [Reserved] For further guidance, see §1.1471–5(e)(5)(i)(E).

(ii) through (iii) [Reserved] For further guidance, see §1.1471–5(e)(5)(ii) through (iii).

(iv) [Reserved] For further guidance, see §1.1471–5(e)(5)(iv).

(A) [Reserved] For further guidance, see §1.1471–5(e)(5)(iv)(A).

(B) The entity does not hold an account (other than a depository account in the country in which the entity is operating to pay for expenses in that country) with or receive payments from any withholding agent other than a member of its expanded affiliated group;

(C) through (D) [Reserved] For further guidance, see §1.1471–5(e)(5)(iv)(C) through (D).

(v) [Reserved] For further guidance, see §1.1471–5(e)(5)(v) through (e)(5)(vi)(D).

(6) [Reserved] For further guidance, see §1.1471–5(e)(6).

(f) [Reserved] For further guidance, see §1.1471–5(f).

(1) [Reserved] For further guidance, see §1.1471–5(f)(1).

(i) [Reserved] For further guidance, see §1.1471–5(f)(1)(i).

(A) [Reserved] For further guidance, see §1.1471–5(f)(1)(i)(A).

(*1*) through (*5*) [Reserved] For further guidance, see §1.1471–5(f)(1)(i)(A)(*1*) through (*5*).

(*6*) By the later of June 30, 2014, or the date it registers as a deemed-compliant FFI, the FFI implements policies and procedures, consistent with those set forth for a participating FFI under §1.1471–4(c), to monitor whether the FFI opens or maintains an account for a specified U.S. person who is not a resident of the country in which the FFI is incorporated or organized (including a U.S. person that was a resident when the account was opened but subsequently ceases to be a resident), an entity controlled or beneficially owned (as determined under the FFI's AML due diligence) by one or more specified U.S. persons that are not residents of the country in which the FFI is incorporated or organized, or a nonparticipating FFI. Such policies and procedures must provide that if any such account is discovered, the FFI will close such account, transfer such account to a participating FFI, reporting Model 1 FFI, or U.S. financial institution, or withhold and report on such account as would be required under §1.1471–4(b) and (d) if the FFI were a participating FFI.

(*7*) through (*9*) [Reserved] For further guidance, see §1.1471–5(f)(1)(i)(A)(*7*) through (*9*).

(B) [Reserved] For further guidance, see §1.1471–5(f)(1)(i)(B).

(*1*) By the later of June 30, 2014, or the date it registers with the IRS pursuant to paragraph (f)(1)(ii) of this section, the FFI implements policies and procedures to ensure that within six months of opening a U.S. account or an account held by a recalcitrant account holder or a nonparticipating FFI, the FFI either transfers such account to an affiliate that is a participating FFI, reporting Model 1 FFI, or U.S. financial institution, closes the account, or becomes a participating FFI.

(*2*) [Reserved] For further guidance, see §1.1471–5(f)(1)(i)(B)(*2*).

(*3*) By the later of June 30, 2014, or the date it registers with the IRS pursuant to paragraph (f)(1)(ii) of this section, the FFI implements policies and procedures to ensure that it identifies any account that becomes a U.S. account or an account held by a recalcitrant account holder or a nonparticipating FFI due to a change in circumstances. Within six months of the date on which the FFI first has knowledge or reason to know of the change in the account holder's chapter 4 status, the FFI transfers any such account to an affiliate that is a participating FFI, reporting Model 1 FFI, or U.S. financial institution, closes the account, or becomes a participating FFI.

(C) [Reserved] For further guidance, see § 1.1471–5(f)(1)(i)(C).

(*1*) [Reserved] For further guidance, see § 1.1471–5(f)(1)(i)(C)(*1*).

(*2*) Each holder of record of direct debt interests in the FFI in excess of $50,000, of any direct equity interests in the FFI (for example the holders of its units or global certificates), and of any other account holder of the FFI is a participating FFI, a registered deemed-compliant FFI, a retirement plan described in § 1.1471–6(f), a non-profit organization described in paragraph (e)(5)(vi) of this section, a U.S. person that is not a specified U.S. person, a nonreporting IGA FFI, or an exempt beneficial owner. Notwithstanding the prior sentence, an FFI will not be prohibited from qualifying as a qualified collective investment vehicle solely because it has issued interests in bearer form provided that the FFI ceased issuing interests in such form after December 31, 2012, retires all such interests upon surrender, and establishes policies and procedures to redeem or immobilize all such interests prior to January 1, 2017, and that prior to payment the FFI documents the account holder in accordance with the procedures set forth in § 1.1471–4(c) applicable to accounts other than preexisting accounts and agrees to withhold and report on such accounts as would be required under § 1.1471–4(b) and (d) if it were a participating FFI. For purposes of this paragraph (f)(1)(i)(C), an FFI may disregard equity interests owned by specified U.S. persons acquired with seed capital within the meaning of paragraph (i)(4) of this section if the specified U.S. person is described in paragraph (i)(3)(i) and (ii) of this section (substituting the term *U.S. person* for the terms *FFI* and *member*), and the specified U.S. person neither has held, nor intends to hold, such interest for more than three years.

(*3*) [Reserved] For further guidance, see § 1.1471–5(f)(1)(i)(C)(*3*).

(D) [Reserved] For further guidance, see § 1.1471–5(f)(1)(i)(D).

(*1*) through (*3*) [Reserved] For further guidance, see § 1.1471–5(f)(1)(i)(D)(*1*) through (*3*).

(*4*) The FFI ensures that by the later of December 31, 2014, or six months after the date the FFI registers as a deemed-compliant FFI, each agreement that governs the distribution of its debt or equity interests prohibits sales and other transfers of debt or equity interests in the FFI (other than interests that are both distributed by and held through a participating FFI) to specified U.S. persons, nonparticipating FFIs, or passive NFFEs with one or more substantial U.S. owners. In addition, by that date, the FFI's prospectus and all marketing materials must indicate that sales and other transfers of interests in the FFI to specified U.S. persons, nonparticipating FFIs, or passive NFFEs with one or more substantial U.S. owners are prohibited unless such interests are both distributed by and held through a participating FFI.

(*5*) The FFI ensures that by the later of December 31, 2014, or six months after the date the FFI registers as a deemed-compliant FFI, each agreement entered into by the FFI that governs the distribution of its debt or equity interests requires the distributor to notify the FFI of a change in the distributor's chapter 4 status within 90 days of the change. The FFI must, with respect to any distributor that ceases to qualify as a distributor identified in paragraph (f)(1)(i)(D)(*3*) of this section, terminate its distribution agreement with the distributor, or cause the distribution agreement to be terminated, within 90 days of the notification of the distributor's change in status and, with respect to all debt and equity interests of the FFI issued through that distributor, redeem those interests, convert those interests to direct holdings in the fund, or cause those interests to be transferred to another distributor identified in paragraph (f)(1)(i)(D)(*3*) of this section within six months of the distributor's change in status.

(*6*) With respect to any of the FFI's preexisting direct accounts that are held by the beneficial owner of the interest in the FFI, the FFI reviews those accounts in accordance with the procedures (and time frames) described in § 1.1471–4(c) applicable to preexisting accounts to identify any U.S. account or account held by a nonparticipating FFI. Notwithstanding the previous sentence, the FFI will not be required to review the account of any individual

investor that purchased its interest at a time when all of the FFI's distribution agreements and its prospectus contained an explicit prohibition of the issuance and/or sale of shares to U.S. entities and U.S. resident individuals. An FFI will not be required to review the account of any investor that purchased its interest in bearer form until the time of payment, but at such time will be required to document the account in accordance with procedures set forth in §1.1471–4(c) applicable to accounts other than preexisting accounts. By the later of December 31, 2014, or six months after the date the FFI registers as a deemed-compliant FFI, the FFI will be required to certify to the IRS either that it did not identify any U.S. account or account held by a nonparticipating FFI as a result of its review or, if any such accounts were identified, that the FFI will either redeem such accounts, transfer such accounts to an affiliate or other FFI that is a participating FFI, reporting Model 1 FFI, or U.S. financial institution, or withhold and report on such accounts as would be required under §1.1471–4(b) and (d) if it were a participating FFI.

(*7*) By the later of June 30, 2014, or the date that it registers as a deemed-compliant FFI, the FFI implements the policies and procedures described in §1.1471–4(c) to ensure that it either—

(*i*) through (*ii*) [Reserved] For further guidance, see §1.1471–5(f)(1)(i)(D)(*7*)(*i*) through (*ii*).

(*8*) [Reserved] For further guidance, see §1.1471–5(f)(1)(i)(D)(*8*).

(E) *Qualified credit card issuers and servicers*. An FFI is described in this paragraph (f)(1)(i)(E) if the FFI meets the following requirements.

(*1*) The FFI is an FFI solely because it is an issuer or servicer of credit cards that accepts deposits, on its own behalf or, in the case of a servicer, on behalf of a credit card issuer, only when a customer makes a payment in excess of a balance due with respect to the credit card account and the overpayment is not immediately returned to the customer.

(*2*) By the later of June 30, 2014, or the date it registers as a deemed-compliant FFI, the FFI implements policies and procedures to either prevent a customer deposit in excess of $50,000 or to ensure that any customer deposit in excess of $50,000 is refunded to the customer within 60 days. For this purpose, a customer deposit does not refer to credit balances to the extent of disputed charges but does include credit balances resulting from merchandise returns.

(F) [Reserved] For further guidance, see §1.1471–5(f)(1)(i)(F).

(*1*) [Reserved] For further guidance, see §1.1471–5(f)(1)(i)(F)(*1*).

(*i*) [Reserved] For further guidance, see §1.1471–5(f)(1)(i)(F)(*1*)(*i*).

(*ii*) An entity, other than a nonparticipating FFI, has agreed with the FFI to act as a sponsoring entity for the FFI.

(*2*) [Reserved] For further guidance, see §1.1471–5(f)(1)(i)(F)(*2*) through (f)(1)(i)(F)(*2*)(*iii*).

(*3*) [Reserved] For further guidance, see §1.1471–5(f)(1)(i)(F)(*3*).

(*i*) through (*iv*) [Reserved] For further guidance, see §1.1471–5(f)(1)(i)(F)(*3*)(*i*) through (*iv*).

(*v*) Identifies the FFI in all reporting completed on the FFI's behalf to the extent required under §§1.1471–4(d)(2)(ii)(C) and 1.1474–1;

(*vi*) Performs the verification procedures required under §1.1471–4(f) on behalf of the FFI, including the certification required under §1.1471–4(f)(3);

(*vii*) Performs the verification procedures required under paragraphs (j) and (k) of this section; and

(*viii*) Has not had its status as a sponsoring entity revoked.

(*4*) [Reserved] For further guidance, see §1.1471–5(f)(1)(i)(F)(*4*).

(*5*) A sponsoring entity is not liable for any failure to comply with the obligations contained in paragraph (f)(1)(i)(F)(*3*) of this section unless the sponsoring entity is a withholding agent that is separately liable for the failure to withhold on or report with respect to a payment made to the sponsored FFI. A sponsored FFI will remain liable for any failure of its sponsoring entity to comply with the obligations contained in paragraph (f)(1)(i)(F)(*3*) of this section that the sponsoring entity has agreed to undertake on behalf of the FFI, even if the sponsoring entity is also a withholding agent and is itself separately liable for the failure to

withhold on or report with respect to a payment made to the sponsored FFI. The same tax, interest, or penalties, however, shall not be collected more than once.

(ii) [Reserved] For further guidance, see § 1.1471–5(f)(1)(ii).

(A) [Reserved] For further guidance, see § 1.1471–5(f)(1)(ii)(A).

(B) Have its responsible officer certify every three years to the IRS, either individually or collectively for the FFI's expanded affiliated group, that all of the requirements for the deemed-compliant category claimed by the FFI have been satisfied since the later of the date the FFI registers as a deemed-compliant FFI or June 30, 2014;

(C) through (D) [Reserved] For further guidance, see § 1.1471–5(f)(1)(ii)(C) through (D).

(iii) [Reserved] For further guidance, see § 1.1471–5(f)(1)(iii).

(2) *Certified deemed-compliant FFIs.* A *certified deemed-compliant FFI* means an FFI described in any of paragraphs (f)(2)(i) through (v) of this section that has certified as to its status as a deemed-compliant FFI by providing a withholding agent with the documentation described in § 1.1471–3(d)(6) applicable to the relevant deemed-compliant category. A certified deemed-compliant FFI also includes a nonreporting FFI under a Model 1 IGA and a nonreporting FFI treated as a certified deemed-compliant FFI under a Model 2 IGA. A certified deemed-compliant FFI is not required to register with the IRS.

(i) [Reserved] For further guidance, see § 1.1471–5(f)(2)(i).

(A) [Reserved] For further guidance, see § 1.1471–5(f)(2)(i)(A) through (f)(2)(i)(A)(*2*).

(B) The FFI's business consists primarily of receiving deposits from and making loans to, with respect to a bank, retail customers that are unrelated to such bank and, with respect to a credit union or similar cooperative credit organization, members, provided that no such member has a greater than 5 percent interest in such credit union or cooperative credit organization. For purposes of this paragraph (f)(2)(i)(B), a customer is related to a bank if the customer and the bank have a relationship described in section 267(b). For purposes of determining whether a member has a greater than 5 percent interest in a credit union or cooperative credit organization, the member must aggregate the ownership or beneficial interests in the credit union or cooperative credit organization that are owned or held by a related member. A member of a credit union or cooperative credit organization is related to another member if the relationship of such members is described in section 267(b).

(C) through (F) [Reserved] For further guidance, see § 1.1471–5(f)(2)(i)(C) through (F).

(ii) [Reserved] For further guidance, see § 1.1471–5(f)(2)(ii) through (f)(2)(ii)(C).

(iii) *Sponsored, closely held investment vehicles.* Subject to the provisions of paragraph (f)(2)(iii)(E) of this section, an FFI is described in this paragraph (f)(2)(iii) if it meets the requirements described in paragraphs (f)(2)(iii)(A) through (D) of this section.

(A) The FFI is an FFI solely because it is an investment entity and is not a QI, WP, or WT.

(B) A participating FFI, reporting Model 1 FFI, or U.S. financial institution agrees to fulfill all due diligence, withholding, and reporting responsibilities that the FFI would have assumed if it were a participating FFI.

(C) Twenty or fewer individuals own all of the debt and equity interests in the FFI (disregarding debt interests owned by U.S. financial institutions, participating FFIs, registered deemed-compliant FFIs, and certified deemed-compliant FFIs and equity interests owned by an entity if that entity owns 100 percent of the equity interests in the FFI and is itself a sponsored FFI under this paragraph (f)(2)(iii)).

(D) The sponsoring entity complies with the following requirements—

(*1*) The sponsoring entity has registered with the IRS as a sponsoring entity;

(*2*) The sponsoring entity agrees to perform, on behalf of the FFI, all due diligence, withholding, reporting, and other requirements that the FFI would have been required to perform if it were a participating FFI and retains documentation collected with respect to the FFI for a period of six years;

(*3*) The sponsoring entity identifies the FFI in all reporting completed on the FFI's behalf to the extent required under §§ 1.1471–4(d)(2)(ii)(C) and 1.1474–1;

(*4*) Performs the verification procedures required under § 1.1471–4(f) on behalf of the FFI, including the certification required under § 1.1471–4(f)(3);

(*5*) Performs the verification procedures required under paragraphs (j) and (k) of this section; and

(*6*) The sponsoring entity has not had its status as a sponsor revoked.

(E) The IRS may revoke a sponsoring entity's status as a sponsoring entity with respect to all sponsored FFIs if there is a material failure by the sponsoring entity to comply with its obligations under this paragraph (f)(2)(iii)(E) with respect to any sponsored FFI. A sponsoring entity is not liable for any failure to comply with the obligations contained in this paragraph (f)(2)(iii)(E) unless the sponsoring entity is a withholding agent that is separately liable for the failure to withhold on or report with respect to the payment made to the sponsored FFI. A sponsored FFI will remain liable for any failure of its sponsoring entity to comply with the obligations contained in this paragraph (f)(2)(iii)(E) that the sponsoring entity has agreed to undertake on behalf of the FFI, even if the sponsoring entity is also a withholding agent and is itself separately liable for the failure to withhold on or report with respect to a payment made to the sponsored FFI. The same tax, interest, or penalties, however, shall not be collected more than once.

(iv) *Limited life debt investment entities (transitional).* An FFI is described in this paragraph (f)(2)(iv) if the FFI is the beneficial owner of the payment (or of payments made with respect to the account) and the FFI meets the following requirements.

(A) The FFI is an investment entity that issued one or more classes of debt or equity interests to investors pursuant to a trust indenture or similar agreement and all of such interests were issued on or before January 17, 2013.

(B) The FFI was in existence as of January 17, 2013, and has entered into a trust indenture or similar agreement that requires the FFI to pay to investors holding substantially all of the interests in the FFI, no later than a set date or period following the maturity of the last asset held by the FFI, all amounts that such investors are entitled to receive from the FFI.

(C) The FFI was formed and operated for the purpose of purchasing or acquiring specific types of debt instruments or interests therein and holding those assets subject to reinvestment only under prescribed circumstances to maturity.

(D) Substantially all of the assets of the FFI consist of debt instruments or interests therein.

(E) All payments made to the investors of the FFI (other than holders of a de minimis interest) are either cleared through a clearing organization or custodial institution that is a participating FFI, reporting Model 1 FFI, or U.S. financial institution or made through a transfer agent that is a participating FFI, reporting Model 1 FFI, or U.S. financial institution.

(F) The FFI's trustee or fiduciary is not authorized through a fiduciary duty or otherwise to fulfill the obligations of a participating FFI under § 1.1471–4 and no other person has the authority to fulfill the obligations of a participating FFI under § 1.1471–4 on behalf of the FFI.

(v) *Investment advisors and investment managers.* An FFI is described in this paragraph (f)(2)(v) if the FFI meets the following requirements:

(A) The FFI is a financial institution solely because it is described in § 1.1471–5(e)(4)(i)(A).

(B) The FFI does not maintain financial accounts.

(3) [Reserved] For further guidance, see § 1.1471–5(f)(3).

(i) [Reserved] For further guidance, see § 1.1471–5(f)(3)(i).

(ii) [Reserved] For further guidance, see § 1.1471–5(f)(3)(ii).

(A) through (E) [Reserved] For further guidance, see § 1.1471–5(f)(3)(ii)(A) through (E).

(4) [Reserved] For further guidance, see § 1.1471–5(f)(4).

(i) The distributor provides investment services to at least 30 customers unrelated to each other and fewer than half of the distributor's customers are related to each other. For purposes of

this paragraph (f)(4)(i), customers are related to each other if they have a relationship with each other described in section 267(b).

(ii) through (viii) [Reserved] For further guidance, see §1.1471–5(f)(4)(ii) through (viii).

(g) [Reserved] For further guidance, see §1.1471–5(g).

(1) through (2) [Reserved] For further guidance, see §1.1471–5(g)(1) through (g)(2)(iv).

(3) [Reserved] For further guidance, see §1.1471–5(g)(3).

(i) [Reserved] For further guidance, see §1.1471–5(g)(3)(i).

(A) through (C) [Reserved] For further guidance, see §1.1471–5(g)(3)(i)(A) through (C).

(D) *Preexisting accounts that become high-value accounts*. With respect to a calendar year beginning after December 31, 2015, an account holder that is described in paragraph (g)(2) of this section and that holds a preexisting account that a participating FFI identifies as a high-value account pursuant to §1.1471–4(c)(5)(iv)(D) will be treated as a recalcitrant account holder beginning on the earlier of the date a withholdable payment is made to the account following end of the calendar year in which the account is identified as a high-value account or the date that is six months after the calendar year end.

(ii) through (iii) [Reserved] For further guidance, see §1.1471–5(g)(3)(ii) through (iii).

(4) [Reserved] For further guidance, see §1.1471–5(g)(4).

(h) [Reserved] For further guidance, see §1.1471–5(h) through (h)(2).

(i) *Expanded affiliated group*—(1) *Scope of paragraph*. This paragraph (i) defines the term *expanded affiliated group* for purposes of chapter 4. For the requirements of a participating FFI with respect to members of its expanded affiliated group that are FFIs, see §1.1471–4(e).

(2) *Expanded affiliated group defined*. Except as otherwise provided in this paragraph (i), an *expanded affiliated group* is defined in accordance with the principles of section 1504(a) to mean one or more chains of members connected through ownership by a common parent entity if the common parent entity directly owns stock or other equity interests meeting the requirements of paragraph (i)(4) of this section in at least one of the other members (for purposes of this paragraph (i), the constructive ownership rules of section 318 do not apply). Generally, only a corporation shall be treated as the common parent entity of an expanded affiliated group, unless the taxpayer elects to follow the approach described in paragraph (i)(10).

(3) *Member of expanded affiliated group*. The term *member of an expanded affiliated group* means a corporation or any entity other than a corporation (such as a partnership or trust) with respect to which the ownership requirements of paragraph (i)(4) of this section are met, regardless of whether such entity is a U.S. person or a foreign person, but excluding corporations described in paragraphs (1), (4), (6), (7), or (8) of section 1504(b).

(4) *Ownership test*. The ownership requirements of this paragraph (i)(4) are met if—

(i) *Corporations*. For purposes of paragraph (i)(2) of this section, a corporation (except the common parent entity) will be considered owned by another member entity or by the common parent entity if more than 50 percent of the total voting power of the stock of such corporation and more than 50 percent of the total value of the stock of such corporation is owned directly by one or more other members of the group (including the common parent entity).

(A) *Stock not to include certain preferred stock*. For purposes of this paragraph (i)(4), the term *stock* does not include any stock which is described in section 1504(a)(4).

(B) *Valuation*. For purposes of section 1471(e) and this section, all shares of stock within a single class are considered to have the same value in determining the ownership percentage. Thus, control premiums and minority blockage discounts within a single class are not taken into account.

(ii) *Partnerships*. For purposes of paragraph (i)(2) of this section, a partnership will be considered owned by another member entity (including the common parent entity) if more than 50 percent (by value) of the capital or

profits interest in the partnership is owned directly by one or more other members of the group (including the common parent entity).

(iii) *Trusts*. For purposes of paragraph (i)(2) of this section, a trust will be considered owned by another member entity or by the common parent entity if more than 50 percent (by value) of the beneficial interest in such trust is owned directly by one or more other members of the group (including the common parent entity). A beneficial interest in a trust includes an interest held by an entity treated as a grantor or other owner of the trust under sections 671 through 679 and a beneficial trust interest.

(5) *Treatment of warrants, options, and obligations convertible into equity for determining ownership*. For purposes of paragraph (i)(4) of this section, ownership of warrants, options, obligations convertible into the equity of a corporation or entity other than a corporation, and other similar interests is not considered for purposes of determining whether an entity is a member of an expanded affiliated group, except as follows:

(i) Ownership of a warrant, option, obligation convertible into stock, or other similar instrument creating an interest in a corporation will be considered for purposes of paragraph (i)(4) of this section to the extent that the common parent or member of the expanded affiliated group that holds such instrument also maintains voting rights with respect to such corporation. However, interests described in §1.1504–4(d)(2) will not be treated as options.

(ii) Ownership of a warrant, option, obligation convertible into an equity interest, or other similar instrument creating an interest in a corporation or entity other than a corporation will be considered for purposes of paragraph (i)(4) of this section to the extent that such instrument is reasonably certain to be exercised, based on all of the facts and circumstances and in accordance with the principles set forth in §1.1504–4(g).

(6) *Exception for FFIs holding certain capital investments*. Notwithstanding paragraphs (i)(2) and (i)(4) of this section, an investment entity will not be considered a member of an expanded affiliated group as a result of a contribution of seed capital by a member of such expanded affiliated group if—

(i) The member that owns the investment entity is an FFI that is in the business of providing seed capital to form investment entities, the interests in which it intends to sell to investors that do not have a relationship with each other described in section 267(b);

(ii) The investment entity is created in the ordinary course of such other FFI's business described in paragraph (i)(6)(i) of this section;

(iii) As of the date the FFI acquired the equity interest, any equity interest in the investment entity in excess of 50 percent of the total value of the stock of the investment entity is intended to be held by such other FFI (including ownership by other members of such other FFI's expanded affiliated group) for no more than three years from the date on which such other FFI first acquired an equity interest in the investment entity; and

(iv) In the case of an equity interest that has been held by such other FFI for over three years from the date referenced in paragraph (i)(6)(iii) of this section, the aggregate value of the equity interest held by such other FFI and the equity interests held by other members of its expanded affiliated group is 50 percent or less of the total value of the stock of the investment entity.

(7) *Seed capital*. For purposes of this paragraph (i), the term *seed capital* means an initial capital contribution made to an investment entity that is intended as a temporary investment and is deemed by the manager of the entity to be necessary or appropriate for the establishment of the entity, such as for the purpose of establishing a track record of investment performance for such entity, achieving economies of scale for diversified investment, avoiding an artificially high expense to return ratio, or similar purposes.

(8) *Anti-abuse rule*. A change in ownership, voting rights, or the form of an entity that results in an entity meeting or not meeting the ownership requirements described in paragraph (i)(4) of this section will be disregarded

for purposes of determining whether an entity is a member of an expanded affiliated group if the change is pursuant to a plan a principal purpose of which is to avoid reporting or withholding that would otherwise be required under any chapter 4 provision. For purposes of this paragraph (i)(8), a change in voting rights includes a separation of voting rights and value.

(9) *Exception for limited life debt investment entities.* Notwithstanding paragraphs (i)(2) and (i)(4) of this section, an entity that meets the requirements of § 1.1471–5(f)(2)(iv), including the requirements to have been in existence as of January 17, 2013, and to have issued interests in the entity on or before January 17, 2013, will not be considered a member of an expanded affiliated group as a result of any member of such expanded affiliated group owning interests in such entity.

(10) *Partnerships, trusts, and other noncorporate entities.* For purposes of determining the composition of an expanded affiliated group, an entity other than a corporation may elect to be treated as the common parent entity. Taxpayers following this approach may not, in a later year, follow the rule described in paragraph (i)(2) without the approval of the Commissioner. See also § 1.1471–5(e)(5)(i)(C).

(j) *Sponsoring entity verification.* [Reserved]

(k) *Sponsoring entity event of default.* [Reserved]

(l) [Reserved] For further guidance, see § 1.1471–5(l).

(m) *Expiration date.* The applicability of this section expires on February 28, 2017.

[T.D. 9657, 79 FR 12850, Mar. 6, 2014; 79 FR 37179, July 1, 2014]

§ 1.1471–6 Payments beneficially owned by exempt beneficial owners.

(a) *In general.* This section describes classes of beneficial owners that are identified in section 1471(f) (exempt beneficial owners). Except as otherwise provided in paragraphs (d) (regarding securities held by foreign central banks of issue) and (f) (regarding retirement funds) of this section, a person must be a beneficial owner of a payment to be treated as an exempt beneficial owner with respect to the payment. The following classes of persons are exempt beneficial owners: any foreign government, any political subdivision of a foreign government, or any wholly owned agency or instrumentality of any one or more of the foregoing described in paragraph (b) of this section; any international organization or any wholly owned agency or instrumentality thereof described in paragraph (c) of this section; any foreign central bank of issue described in paragraph (d) of this section; any government of a U.S. territory described in paragraph (e) of this section; certain foreign retirement funds described in paragraph (f) of this section; and certain entities described in paragraph (g) of this section that are wholly owned by one or more other exempt beneficial owners. In addition, an exempt beneficial owner includes any person treated as an exempt beneficial owner pursuant to a Model 1 IGA or Model 2 IGA. See §§ 1.1471–2(a)(4)(v) and 1.1472–1(c)(2) for the exemptions from withholding for payments beneficially owned by an exempt beneficial owner; § 1.1471–3(d)(9) for the documentation requirements applicable to a withholding agent for purposes of determining when a withholdable payment is beneficially owned by an exempt beneficial owner; and § 1.1471–3(d)(8)(ii) for when a withholding agent may treat a payment made to a nonparticipating FFI as beneficially owned by an exempt beneficial owner.

(b) *Any foreign government, any political subdivision of a foreign government, or any wholly owned agency or instrumentality of any one or more of the foregoing.* Solely for purposes of this section and except as provided in paragraph (h) of this section, the term *any foreign government, any political subdivision of a foreign government, or any wholly owned agency or instrumentality of any one or more of the foregoing* means only the integral parts, controlled entities, and political subdivisions of a foreign sovereign.

(1) *Integral part.* Solely for purposes of this paragraph (b), an *integral part* of a foreign sovereign is any person, body of persons, organization, agency, bureau, fund, instrumentality, or other body, however designated, that constitutes a governing authority of a foreign country. The net earnings of the

governing authority must be credited to its own account or to other accounts of the foreign sovereign, with no portion inuring to the benefit of any private person as defined in paragraph (b)(3) of this section. An integral part does not include any individual who is a sovereign, official, or administrator acting in a private or personal capacity. All the facts and circumstances will be taken into account in determining whether an individual is acting in a private or personal capacity.

(2) *Controlled entity*. Solely for purposes of this paragraph (b), a *controlled entity* means an entity that is separate in form from a foreign sovereign or that otherwise constitutes a separate juridical entity, provided that—

(i) The entity is wholly owned and controlled by one or more foreign sovereigns directly or indirectly through one or more controlled entities;

(ii) The entity's net earnings are credited to its own account or to other accounts of one or more foreign sovereigns, with no portion of its income inuring to the benefit of any private person as defined in paragraph (b)(3) of this section; and

(iii) The entity's assets vest in one or more foreign sovereigns upon dissolution.

(3) *Inurement to the benefit of private persons*. Solely for purposes of this paragraph (b)—

(i) Income does not inure to the benefit of private persons if such persons (within the meaning of section 7701(a)(1)) are the intended beneficiaries of a governmental program carried on by a foreign sovereign, and the program activities constitute governmental functions under the regulations under section 892.

(ii) Income is considered to inure to the benefit of private persons if such income benefits—

(A) Private persons through the use of a governmental entity as a conduit for personal investment;

(B) Private persons through the use of a governmental entity to conduct a commercial business, such as a commercial banking business, that provides financial services to private persons; or

(C) Private persons who divert such income from its intended use by exerting influence or control through means explicitly or implicitly approved of by the foreign sovereign.

(c) *Any international organization or any wholly owned agency or instrumentality thereof*. Except as provided in paragraph (h) of this section, the term *any international organization or any wholly owned agency or instrumentality thereof* means any entity described in section 7701(a)(18). The term also includes any intergovernmental or supranational organization—

(1) That is comprised primarily of foreign governments;

(2) That is recognized as an intergovernmental or supranational organization under a foreign law similar to 22 U.S.C. 288–288f or that has in effect a headquarters agreement with a foreign government; and

(3) Whose income does not inure to the benefit of private persons under the principles of paragraph (b)(3)(ii) of this section, as applied to the intergovernmental or supranational organization in place of the government or governmental entity.

(d) *Foreign central bank of issue*—(1) Reserved] For further guidance, see § 1.1471–6T(d)(1).

(2) *Separate instrumentality*. A foreign central bank of issue may include an instrumentality that is separate from a foreign government, whether or not owned in whole or in part by a foreign government. For example, foreign banks organized along the lines of, and performing functions similar to, the Federal Reserve System qualify as foreign central banks of issue for purposes of this section.

(3) *Bank for International Settlements*. The Bank for International Settlements is a foreign central bank of issue for purposes of this section.

(4) [Reserved] For further guidance, see § 1.1471–6T(d)(4).

(e) *Governments of U.S. territories*. Except as provided in paragraph (h) of this section, whether a person or entity constitutes a government of a U.S. territory for purposes of this section is determined by applying principles analogous to those set forth in paragraph (b) of this section.

(f) *Certain retirement funds.* A fund is described in this paragraph (f) if it is described in paragraphs (f)(1) through (6) of this section. In addition, if a withholding agent may treat a withholdable payment as made to a payee that is a retirement fund in accordance with § 1.1471–3, then the withholding agent may also treat such retirement fund as the beneficial owner of the payment. See § 1.1471–3(d)(9)(ii).

(1) *Treaty-qualified retirement fund.* A fund established in a country with which the United States has an income tax treaty in force, provided that the fund is entitled to benefits under such treaty on income that it derives from sources within the United States (or would be entitled to such benefits if it derived any such income) as a resident of the other country that satisfies any applicable limitation on benefits requirement, and is operated principally to administer or provide pension or retirement benefits;

(2) *Broad participation retirement fund.* A fund established to provide retirement, disability, or death benefits, or any combination thereof, to beneficiaries that are current or former employees (or persons designated by such employees) of one or more employers in consideration for services rendered, provided that the fund—

(i) Does not have a single beneficiary with a right to more than five percent of the fund's assets;

(ii) Is subject to government regulation and provides annual information reporting about its beneficiaries to the relevant tax authorities in the country in which the fund is established or operates; and

(iii) Satisfies one or more of the following requirements—

(A) The fund is generally exempt from tax on investment income under the laws of the country in which it is established or operates due to its status as a retirement or pension plan;

(B) [Reserved] For further guidance, see § 1.1471–6T(f)(2)(iii)(B).

(C) [Reserved] For further guidance, see § 1.1471–6T(f)(2)(iii)(C).

(D) Contributions (other than certain permitted make-up contributions) by employees to the fund are limited by reference to earned income of the employee or may not exceed $50,000 annually.

(3) *Narrow participation retirement funds.* A fund established to provide retirement, disability, or death benefits to beneficiaries that are current or former employees (or persons designated by such employees) of one or more employers in consideration for prior services rendered, provided that—

(i) The fund has fewer than 50 participants;

(ii) [Reserved] For further guidance, see § 1.1471–6T(f)(3)(ii).

(iii) [Reserved] For further guidance, see § 1.1471–6T(f)(3)(iii).

(iv) Participants that are not residents of the country in which the fund is established or operated are not entitled to more than 20 percent of the fund's assets; and

(v) The fund is subject to government regulation and provides annual information reporting about its beneficiaries to the relevant tax authorities in the country in which the fund is established or operates.

(4) *Fund formed pursuant to a plan similar to a section 401(a) plan.* A fund formed pursuant to a pension plan that would meet the requirements of section 401(a), other than the requirement that the plan be funded by a trust created or organized in the United States.

(5) [Reserved] For further guidance, see § 1.1471–6T(f)(5).

(6) [Reserved] For further guidance, see § 1.1471–6T(f)(6).

(7) *Example.* FP, a foreign pension fund established in Country X, is generally exempt from income taxation in Country X, and is operated principally to provide retirement benefits in such country. The U.S.-Country X income tax treaty is identical in all material respects to the 2006 U.S. model income tax convention. FP is a resident of Country X under Article 4(2)(a) and a qualified person under Article 22(2)(d) of the U.S.-Country X income tax treaty. Therefore, FP is a pension fund described in paragraph (f)(1) of this section.

(g) [Reserved] For further guidance, see § 1.1471–6T(g).

(h) *Exception for commercial activities*—(1) *General rule.* An exempt beneficial owner described in paragraph (b), (c), (d), or (e) of this section will not be

treated as an exempt beneficial owner with respect to a payment that is derived from an obligation held in connection with a commercial financial activity of a type engaged in by an insurance company, custodial institution, or depository institution (including the accepting of deposits). Thus, for example, a central bank of issue that conducts a commercial financial activity, such as acting as an intermediary on behalf of persons other than in the bank's capacity as a central bank of issue, is not an exempt beneficial owner under paragraph (d)(1) of this section with respect to payments received in connection with an account held in connection with such activity.

(2) [Reserved] For further guidance, see § 1.1471–6T(h)(2) through (h)(2)(iii).

(i) *Effective/applicability date.* This section applies January 28, 2013.

[T.D. 9610, 78 FR 5976, Jan. 28, 2013; 78 FR 55208, Sept. 10, 2013, as amended by T.D. 9657, 79 FR 12857, Mar. 6, 2014]

§ 1.1471–6T Payments beneficially owned by exempt beneficial owners (temporary).

(a) through (c) [Reserved] For further guidance, see § 1.1471–6(a) through (c)(3).

(d) [Reserved] For further guidance, see § 1.1471–6(d).

(1) *In general.* Solely for purposes of this section and except as provided in paragraph (h) of this section, the term *foreign central bank of issue* means an institution that is by law or government sanction the principal authority, other than the government itself, issuing instruments intended to circulate as currency. Such an institution is generally the custodian of the banking reserves of the country under whose law it is organized.

(2) through (3) [Reserved] For further guidance, see § 1.1471–6(d)(2) through (3).

(4) *Income on certain transactions.* Solely for purposes of determining whether an entity is an exempt beneficial owner of a payment under this paragraph (d), a foreign central bank of issue is a beneficial owner with respect to income earned on cash and securities, including cash and securities held as collateral or securities held in connection with a securities lending transaction, held by the foreign central bank of issue in the ordinary course of its operations as a central bank of issue.

(e) [Reserved] For further guidance, see § 1.1471–6(e).

(f) [Reserved] For further guidance, see § 1.1471–6(f).

(1) [Reserved] For further guidance, see § 1.1471–6(f)(1).

(2) [Reserved] For further guidance, see § 1.1471–6(f)(2).

(i) through (ii) [Reserved] For further guidance, see § 1.1471–6(f)(2)(i) through (ii).

(iii) [Reserved] For further guidance, see § 1.1471–6(f)(2)(iii).

(A) [Reserved] For further guidance, see § 1.1471–6(f)(2)(iii)(A).

(B) The fund receives at least 50 percent of its total contributions (other than transfers of assets from accounts described in § 1.1471–5(b)(2)(i)(A) (referring to retirement and pension accounts), from retirement and pension accounts described in an applicable Model 1 or Model 2 IGA, or from other retirement funds described in this paragraph (f) or in an applicable Model 1 or Model 2 IGA) from the sponsoring employers;

(C) Distributions or withdrawals from the fund are allowed only upon the occurrence of specified events related to retirement, disability, or death (except rollover distributions to accounts described in § 1.1471–5(b)(2)(i)(A) (referring to retirement and pension accounts), to retirement and pension accounts described in an applicable Model 1 or Model 2 IGA, or to other retirement funds described in this paragraph (f) or in an applicable Model 1 or Model 2 IGA), or penalties apply to distributions or withdrawals made before such specified events; or

(D) [Reserved] For further guidance, see § 1.1471–6(f)(2)(iii)(D).

(3) [Reserved] For further guidance, see § 1.1471–6(f)(3).

(i) [Reserved] For further guidance, see § 1.1471–6(f)(3)(i).

(ii) The fund is sponsored by one or more employers and each of these employers are not investment entities or passive NFFEs;

(iii) Employee and employer contributions to the fund (other than transfers of assets from other retirement plans described in paragraph

(f)(1) of this section, from accounts described in § 1.1471–5(b)(2)(i)(A) (referring to retirement and pension accounts), or retirement and pension accounts described in an applicable Model 1 or Model 2 IGA) are limited by reference to earned income and compensation of the employee, respectively;

(iv) through (v) [Reserved] For further guidance, see § 1.1471–6(f)(3)(iv) through (v).

(4) [Reserved] For further guidance, see § 1.1471–6(f)(4).

(5) *Investment vehicles exclusively for retirement funds.* A fund established exclusively to earn income for the benefit of one or more retirement funds described in paragraphs (f)(1) through (5) of this section or in an applicable Model 1 or Model 2 IGA, accounts described in § 1.1471–5(b)(2)(i)(A) (referring to retirement and pension accounts), or retirement and pension accounts described in an applicable Model 1 or Model 2 IGA.

(6) *Pension fund of an exempt beneficial owner.* A fund established and sponsored by an exempt beneficial owner described in paragraph (b), (c), (d), or (e) of this section or an exempt beneficial owner (other than a fund that qualifies as an exempt beneficial owner) described in an applicable Model 1 or Model 2 IGA to provide retirement, disability, or death benefits to beneficiaries or participants that are current or former employees of the exempt beneficial owner (or persons designated by such employees), or that are not current or former employees, but the benefits provided to such beneficiaries or participants are in consideration of personal services performed for the exempt beneficial owner.

(7) [Reserved] For further guidance, see § 1.1471–6(f)(7).

(g) *Entities wholly owned by exempt beneficial owners.* A person is described in this paragraph (g) if it is an FFI solely because it is an investment entity, each direct holder of an equity interest in the investment entity is an exempt beneficial owner described in paragraph (b), (c), (d), (e), (f), or (g) of this section or an exempt beneficial owner described in an applicable Model 1 or Model 2 IGA, and each direct holder of a debt interest in the investment entity is either a depository institution (with respect to a loan made to such entity), an exempt beneficial owner described in paragraph (b), (c), (d), (e), (f), or (g) of this section, or an exempt beneficial owner described in an applicable Model 1 or Model 2 IGA.

(h) [Reserved] For further guidance, see § 1.1471–6(h).

(1) [Reserved] For further guidance, see § 1.1471–6(h)(1).

(2) *Limitation.* Paragraph (h)(1) of this section will not apply to treat an exempt beneficial owner as engaged in a commercial financial activity if—

(i) The entity undertakes commercial financial activity described in paragraph (h)(1) of this section solely for or at the direction of other exempt beneficial owners and such commercial financial activity is consistent with the purposes of the entity;

(ii) The entity has no outstanding debt that would be a financial account under § 1.1471–5(b)(1)(iii); and

(iii) The entity otherwise maintains financial accounts only for exempt beneficial owners, or, in the case of a foreign central bank of issue as described in paragraph (d), the entity only maintains financial accounts that are depository accounts for current or former employees of the entity (and the spouses and children of such employees) or financial accounts for exempt beneficial owners.

(i) [Reserved] For further guidance, see § 1.1471–6(i).

(j) *Expiration date.* The applicability of this section expires on February 28, 2017.

[T.D. 9657, 79 FR 12857, Mar. 6, 2014; 79 FR 37180, July 1, 2014]

§ 1.1472–1 Withholding on NFFEs.

(a) *In general.* This section provides rules that a withholding agent must apply to determine its obligations to withhold under section 1472 on withholdable payments made to a payee that is an NFFE. A participating FFI that complies with its withholding obligations under § 1.1471–4(b) will be deemed to satisfy its obligations under section 1472 with respect to withholdable payments made to NFFEs that are account holders. The rules of this section will apply, however, in the case of a participating FFI acting as a withholding agent with respect to a

payment made to an NFFE that is not an account holder (for example, a payment with respect to a contract that does not constitute a financial account). See §1.1473–1(a)(4)(vi), however, for rules excepting from the definition of withholdable payment certain payments of U.S. source FDAP income made prior to January 1, 2017, with respect to an offshore obligation and §1.1471–2(b) for rules excepting from the definition of withholdable payment a grandfathered obligation. See also §1.1471–2(a)(2)(ii), (iv), (v), and (vi) for special rules of withholding that apply for purposes of this section and §1.1471–2(a)(5) for withholding requirements if the source or character of a payment is unknown.

(b) *Withholdable payments made to an NFFE*—(1) [Reserved] For further guidance, see §1.1472–1T(b)(1).

(i) The beneficial owner of such payment is the NFFE or any other NFFE;

(ii) The withholding agent can, pursuant to paragraph (d) of this section, treat the beneficial owner of the payment as an NFFE that does not have any substantial U.S. owners, or as an NFFE that has identified its substantial U.S. owners; and

(iii) The withholding agent reports the information described in §1.1474–1(i)(2) relating to any substantial U.S. owners of the beneficial owner of such payment.

(2) [Reserved] For further guidance, see §1.1472–1T(b)(2).

(c) *Exceptions*—(1) [Reserved] For further guidance, see §1.1472–1T(c)(1).

(i) [Reserved] For further guidance, see §1.1472–1T(c)(1)(i).

(A) *Regularly traded*. For purposes of this section, stock of a corporation is *regularly traded* on one or more established securities markets for a calendar year if—

(*1*) One or more classes of stock of the corporation that, in the aggregate, represent more than 50 percent of the total combined voting power of all classes of stock of such corporation entitled to vote and of the total value of the stock of such corporation are listed on such market or markets during the prior calendar year; and

(*2*) With respect to each class relied on to meet the more-than-50-percent listing requirement of paragraph (c)(1)(i)(A)(*1*) of this section—

(*i*) Trades in each such class are effected, other than in de minimis quantities, on such market or markets on at least 60 days during the prior calendar year; and

(*ii*) The aggregate number of shares in each such class that are traded on such market or markets during the prior year are at least 10 percent of the average number of shares outstanding in that class during the prior calendar year.

(B) *Special rules regarding the regularly traded requirement*—(*1*) *Year of initial public offering*. For the calendar year in which a corporation initiates a public offering of a class of stock for trading on one or more established securities markets, as defined in paragraph (c)(1)(i)(C) of this section, such class of stock meets the requirements of this paragraph (c)(1)(i) for such year if the stock is regularly traded in more than de minimis quantities on ⅙ of the days remaining after the date of the offering in the quarter during which the offering occurs, and on at least 15 days during each remaining quarter of the calendar year. If a corporation initiates a public offering of a class of stock in the fourth quarter of the calendar year, such class of stock meets the requirements of this paragraph (c)(1)(i) in the calendar year of the offering if the stock is regularly traded on such established securities market, other than in de minimis quantities, on the greater of ⅙ of the days remaining after the date of the offering in the quarter during which the offering occurs, or 5 days.

(*2*) *Classes of stock treated as meeting the regularly traded requirement*. A class of stock meets the trading requirements of this paragraph (c)(1)(i) for a calendar year if the stock is traded during such year on an established securities market located in the United States and is regularly quoted by dealers making a market in the stock. A dealer makes a market in a stock only if the dealer regularly and actively offers to, and in fact does, purchase the stock from, and sell the stock to, customers who are not related persons (as

defined in section 954(d)(3)) with respect to the dealer in the ordinary course of a trade or business.

(*3*) *Anti-abuse rule*. Any trade conducted with a principal purpose of meeting the regularly traded requirements of this paragraph (c)(1)(i) shall be disregarded. Further, a class of stock shall not be treated as regularly traded if there is a pattern of trades conducted to meet the requirements of this paragraph (c)(1)(i). Similarly, paragraph (c)(1)(i)(B)(*1*) of this section shall not apply to a public offering of stock that has as one of its principal purposes qualification of the class of stock as regularly traded under the reduced regularly traded requirements for the calendar year of an initial public offering. For purposes of applying the immediately preceding sentence, consideration will be given to whether the regularly traded requirements of this paragraph (c)(1)(i) are satisfied in the calendar year immediately following the initial public offering.

(C) *Established securities market*—(*1*) *In general*. For purposes of this paragraph (c)(1)(i), the term *established securities market* means, for any calendar year—

(*i*) A foreign securities exchange that is officially recognized, sanctioned, or supervised by a governmental authority of the foreign country in which the market is located, and has an annual value of shares traded on the exchange (or a predecessor exchange) exceeding $1 billion during each of the three calendar years immediately preceding the calendar year in which the determination is being made;

(*ii*) A national securities exchange that is registered under section 6 of the Securities Exchange Act of 1934 (15 U.S.C. 78f) with the Securities and Exchange Commission;

(*iii*) Any exchange designated under a Limitation on Benefits article of an income tax treaty with the United States that is in force; or

(*iv*) Any other exchange that the Secretary may designate in published guidance.

(*2*) *Foreign exchange with multiple tiers*. If an exchange in a foreign country has more than one tier or market level on which stock may be separately listed or traded, each such tier shall be treated as a separate exchange.

(*3*) *Computation of dollar value of stock traded*. For purposes of paragraph (c)(1)(i)(C)(*1*)(*i*) of this section, the value in U.S. dollars of shares traded during a calendar year shall be determined on the basis of the dollar value of such shares traded as reported by the World Federation of Exchanges located in Paris (or a successor institution), or, if not so reported, by converting into U.S. dollars the aggregate value in local currency of the shares traded using an exchange rate equal to the average of the spot rates on the last day of each month of the calendar year.

(ii) [Reserved] For further guidance, see §1.1472–1T(c)(1)(ii).

(iii) [Reserved] For further guidance, see §1.1472–1T(c)(1)(iii).

(iv) [Reserved] For further guidance, see §1.1472–1T(c)(1)(iv).

(A) *Passive income*. Except as provided in paragraph (c)(1)(iv)(B) of this section, the term *passive income* means the portion of gross income that consists of—

(*1*) Dividends, including substitute dividend amounts;

(*2*) Interest;

(*3*) Income equivalent to interest, including substitute interest and amounts received from or with respect to a pool of insurance contracts if the amounts received depend in whole or part upon the performance of the pool;

(*4*) Rents and royalties, other than rents and royalties derived in the active conduct of a trade or business conducted, at least in part, by employees of the NFFE;

(*5*) Annuities;

(*6*) The excess of gains over losses from the sale or exchange of property that gives rise to passive income described in paragraphs (c)(1)(iv)(A)(*1*) through (*5*) of this section;

(*7*) The excess of gains over losses from transactions (including futures, forwards, and similar transactions) in any commodities, but not including—

(*i*) Any commodity hedging transaction described in section 954(c)(5)(A), determined by treating the entity as a controlled foreign corporation; or

(*ii*) Active business gains or losses from the sale of commodities, but only if substantially all the foreign entity's commodities are property described in

paragraph (1), (2), or (8) of section 1221(a);

(*8*) The excess of foreign currency gains over foreign currency losses (as defined in section 988(b)) attributable to any section 988 transaction;

(*9*) Net income from notional principal contracts as defined in §1.446–3(c)(1);

(*10*) Amounts received under cash value insurance contracts; or

(*11*) Amounts earned by an insurance company in connection with its reserves for insurance and annuity contracts.

(B) *Exceptions from passive income treatment*. Notwithstanding paragraph (c)(1)(iv)(A) of this section, the term *passive income* does not include—

(*1*) Any income from interest, dividends, rents, or royalties that is received or accrued from a related person to the extent such amount is properly allocable to income of such related person that is not passive income. For purposes of this paragraph (c)(1)(iv)(B)(*1*), the term ''related person'' has the meaning given such term by section 954(d)(3) determined by substituting ''foreign entity'' for ''controlled foreign corporation'' each place it appears in section 954(d)(3); or

(*2*) In the case of a foreign entity that regularly acts as a dealer in property described in paragraph (c)(1)(iv)(A)(*6*) of this section (referring to the sale or exchange of property that gives rise to passive income), forward contracts, option contracts, or similar financial instruments (including notional principal contracts and all instruments referenced to commodities)—

(*i*) Any item of income or gain (other than any dividends or interest) from any transaction (including hedging transactions and transactions involving physical settlement) entered into in the ordinary course of such dealer's trade or business as such a dealer; and

(*ii*) If such dealer is a dealer in securities (within the meaning of section 475(c)(2)), any income from any transaction entered into in the ordinary course of such trade or business as a dealer in securities.

(C) [Reserved] For further guidance, see §1.1472–1T(c)(1)(iv)(C).

(v) [Reserved] For further guidance, see §1.1472–1T(c)(1)(v).

(vi) [Reserved] For further guidance, see §1.1472–1T(c)(1)(vi).

(vii) [Reserved] For further guidance, see §1.1472–1T(c)(1)(vii).

(2) [Reserved] For further guidance, see §1.1472–1T(c)(2).

(3) [Reserved] For further guidance, see §1.1472–1T(c)(3).

(4) [Reserved] For further guidance, see §1.1472–1T(c)(4).

(5) [Reserved] For further guidance, see §1.1472–1T(c)(5) through (c)(5)(iv).

(d) *Rules for determining payee and beneficial owner*—(1) [Reserved] For further guidance, see §1.1472–1T(d)(1).

(2) [Reserved] For further guidance, see §1.1472–1T(d)(2).

(3) *Payments made to a partner or beneficiary of an NFFE that is an NWP or NWT*. A withholding agent may treat a partner or beneficiary of an NFFE that is an NWP or NWT, respectively, as the payee of a withholdable payment under this section if the withholding agent can reliably associate the payment with a valid Form W–8 or written notification that the NFFE is a flow-through entity as described in §1.1471–3(c)(2), including valid documentation sufficient to establish the chapter 4 status of each payee of the payment that is a partner or beneficiary, respectively, by applying the rules described in §1.1471–3(d).

(4) *Payments made to a beneficial owner that is an NFFE*. A withholding agent may treat the beneficial owner of a withholdable payment as an NFFE that does not have any substantial U.S. owners or that has identified all of its substantial U.S. owners if it can reliably associate the payment with valid documentation identifying the beneficial owner as an NFFE that does not have any substantial U.S. owners or that has identified all of its substantial U.S. owners by applying the rules described in §1.1471–3(d).

(5) *Absence of valid documentation*. A withholding agent that cannot reliably associate the payment with documentation as described in any of paragraphs (d)(2) through (4) of this section must treat the payment as made to a payee in accordance with the presumption rules under §1.1471–3(f).

(e) *Information reporting requirements*—(1) *Reporting on withholdable payments*. A withholding agent that

treats a withholdable payment as made to any payee described in paragraph (d) of this section must provide information about such payee on Form 1042–S and file a withholding income tax return on Form 1042 to the extent required under §1.1474–1(d) and (c), respectively.

(2) *Reporting on substantial U.S. owners.* A withholding agent that receives information about any substantial U.S. owners of an NFFE that is not an excepted NFFE must report information about the NFFE's substantial U.S. owners in accordance with §1.1474–1(i)(2). See §1.1471–4(d) for the reporting requirements of a participating FFI with respect to the substantial U.S. owners of account holders that are NFFEs.

(f) [Reserved] For further guidance, see §1.1472–1T(f).

(g) [Reserved] For further guidance, see §1.1472–1T(g).

(h) *Effective/applicability date.* This section generally applies January 28, 2013. For other dates of applicability, see §1.1472–1(b).

[T.D. 9610, 78 FR 5978, Jan. 28, 2013; 78 FR 55208, Sept. 10, 2013, as amended by T.D. 9657, 79 FR 12858, Mar. 6, 2014]

§1.1472–1T Withholding on NFFEs (temporary).

(a) [Reserved] For further guidance, see §1.1472–1(a).

(b) [Reserved] For further guidance, see §1.1472–1(b).

(1) *In general.* Except as otherwise provided in paragraph (b)(2) of this section (providing transitional relief) or paragraphs (c)(1) or (2) of this section (providing exceptions for payments to an excepted NFFE or an exempt beneficial owner), §1.1471–2(a)(4)(i) (providing an exception to withholding if the withholding agent lacks control, custody, or knowledge), §1.1471–2(a)(4)(vii) (providing an exception to withholding for payments made to an account held with or equity interests traded through a clearing organization with FATCA-compliant membership), or §1.1471–2(a)(4)(viii) (providing an exception to withholding for payments to certain excepted accounts), a withholding agent must withhold 30 percent of any withholdable payment made after June 30, 2014, to a payee that is a NFFE unless—

(i) through (iii) [Reserved] For further guidance, see §1.1472–1(b)(1)(i) through (iii).

(2) *Transitional relief.* For any withholdable payment made prior to July 1, 2016, with respect to a preexisting obligation to a payee that is not a prima facie FFI and for which a withholding agent does not have documentation indicating the payee's status as a passive NFFE when the NFFE has failed to provide the owner certification as required under §1.1471–3(d)(12)(iii), the withholding agent is not required to withhold under this section or report under §1.1474–1(i)(2) (describing the reporting obligations of withholding agents with respect to NFFEs).

(c) [Reserved] For further guidance, see §1.1472–1(c).

(1) *Payments to an excepted NFFE.* A withholding agent is not required to withhold under section 1472(a) and paragraph (b) of this section on a withholdable payment (or portion thereof) if the withholding agent can treat the payment as made to a payee that is an excepted NFFE. For purposes of this paragraph, the term *excepted NFFE* means a payee that the withholding agent may treat as a NFFE that is a QI, WP, or WT. Additionally, the term *excepted NFFE* means, with respect to the payment, a NFFE described in paragraphs (c)(1)(i) through (vii) of this section to the extent the withholding agent may treat the NFFE as the beneficial owner of the payment.

(i) *Publicly traded corporation.* A NFFE is described in this paragraph (c)(1)(i) if it is a corporation the stock of which is regularly traded on one or more established securities markets for the calendar year.

(A) through (C) [Reserved] For further guidance, see §1.1472–1(c)(1)(i)(A) through (c)(1)(i)(C)(*3*).

(ii) *Certain affiliated entities related to a publicly traded corporation.* A NFFE is described in this paragraph (c)(1)(ii) if it is a corporation that is a member of the same expanded affiliated group (as defined in §1.1471–5(i)) as a corporation described in paragraph (c)(1)(i) of this

section (without regard to whether such corporation is a NFFE).

(iii) *Certain territory entities.* A NFFE is described in this paragraph (c)(1)(iii) if it is a territory entity that is directly or indirectly wholly owned by one or more bona fide residents of the U.S. territory under the laws of which the entity is organized. The term *bona fide resident of a U.S. territory* means an individual who qualifies as a bona fide resident under section 937(a) and § 1.937–1.

(iv) *Active NFFEs.* A NFFE is described in this paragraph (c)(1)(iv) if it is an entity (an *active NFFE*) and less than 50 percent of its gross income for the preceding taxable year (*i.e.*, calendar or fiscal) is passive income and less than 50 percent of the weighted average percentage of assets (tested quarterly) held by it are assets that produce or are held for the production of passive income, as determined after the application of paragraph (c)(1)(iv)(B) of this section (passive assets).

(A) through (B) [Reserved] For further guidance, see § 1.1472–1(c)(1)(iv)(A) through (c)(1)(B)(*2*)(*ii*).

(C) *Methods of measuring assets.* For purposes of this paragraph (c)(1)(iv), the value of a NFFE's assets is determined based on the fair market value or book value of the assets that is reflected on the NFFE's balance sheet (as determined under either a U.S. or an international financial accounting standard).

(v) *Excepted nonfinancial entities.* A NFFE is described in this paragraph (c)(1)(v) if it is an entity described in § 1.1471–5(e)(5) (referring to holding companies, treasury centers, and captive finance companies that are members of a nonfinancial group; start-up companies; entities that are liquidating or emerging from bankruptcy; and non-profit organizations).

(vi) *Direct reporting NFFEs.* A NFFE is described in this paragraph (c)(1)(vi) if it meets the requirements described in § 1.1472–1(c)(3) to be treated as a direct reporting NFFE.

(vii) *Sponsored direct reporting NFFEs.* A NFFE is described in this paragraph (c)(1)(vii) if it meets the requirements described in § 1.1472–1(c)(5) to be treated as a sponsored direct reporting NFFE.

(2) *Payments made to an exempt beneficial owner.* A withholding agent is not required to withhold on a withholdable payment (or portion thereof) under section 1472(a) and paragraph (b) of this section if the withholding agent may treat the payment as made to an exempt beneficial owner.

(3) Definition of *direct reporting NFFE.* A *direct reporting NFFE* means a NFFE that elects to report information about its direct or indirect substantial U.S. owners to the IRS and meets the following requirements—

(i) The NFFE must register on Form 8957, ''FATCA Registration,'' (or such other form as the IRS may prescribe) with the IRS to obtain a GIIN pursuant to the procedures prescribed by the IRS;

(ii) The NFFE must report directly to the IRS on Form 8966, ''FATCA Report,'' (or such other form as the IRS may prescribe) the following information for each calendar year (or, may be required by the IRS to certify on Form 8966, or in such other manner as the IRS may prescribe, that the NFFE has no substantial U.S. owners):

(A) The name, address, and TIN of each substantial U.S. owner (as defined in § 1.1473–1(b)) of such NFFE;

(B) The total of all payments made to each substantial U.S. owner (including the gross amounts paid or credited to the substantial U.S. owner with respect to such owner's equity interest in the NFFE during the calendar year, which include payments in redemption or liquidation (in whole or part) of the substantial U.S. owner's equity interest in the NFFE);

(C) The value of each substantial U.S. owner's equity interest in the NFFE determined by applying the rules described in § 1.1471–5(b)(4) (substituting the term *equity* for the terms *account* and *financial account*);

(D) The name, address, and GIIN of the NFFE, and

(E) Any other information as required by Form 8966 (or such other form as the IRS may prescribe) and its accompanying instructions;

(iii) The NFFE must obtain a written certification (contained on a withholding certificate or in a written statement) from each person that would be treated as a substantial U.S.

owner of the NFFE if such person were a specified U.S. person. Such written certification must indicate whether the person is a substantial U.S. owner of the NFFE, and if so, the name, address and TIN of the person. If the NFFE has reason to know that such written certification is unreliable or incorrect, it must contact the person and request a revised written certification. If no revised written certification is received, the NFFE must treat the person as a substantial U.S. owner and report on Form 8966 the information required under paragraph (c)(3)(ii) of this section. The NFFE has reason to know that such a written certification is unreliable or incorrect if the certification is inconsistent with information in the NFFE's possession, including information that the NFFE provides to a financial institution in order for the financial institution to meet its AML or other account identification due diligence procedures with respect to the NFFE's account, information that is publicly available, or U.S. indicia as described in §1.1441–7(b) for which appropriate documentation sufficient to cure the U.S. indicia in the manner set forth in §1.1441–7(b)(8) has not been obtained.

(iv) The NFFE must keep records that it produces in the ordinary course of its business that summarize the activity (including the gross amounts described in paragraph (c)(3)(ii)(B) that are paid or credited to each of its substantial U.S. owners) relating to its transactions with respect to the equity of the NFFE held by each of its substantial U.S. owners for any calendar year in which the owner was required to be reported under paragraph (c)(3)(ii) of this section. The records must be retained for the longer of six years or the retention period under the NFFE's normal business procedures. A NFFE may be required to extend the six year retention period if the IRS requests such an extension prior to the expiration of the six year period;

(v) The NFFE must respond to requests made by the IRS for additional information with respect to any substantial U.S. owner that is subject to reporting by the NFFE or with respect to the records described in paragraphs (c)(3)(iii) or (iv) of this section;

(vi) The NFFE must make a periodic certification to the IRS within each six-month period following the end of each certification period relating to its compliance with respect to the election described in paragraphs (c)(3) and (4) of this section. The first certification period begins on the date a GIIN is issued and ends at the close of the third full calendar year following that date. Each subsequent certification period is the three calendar year period following the close of the previous certification period. The certification will require an officer of the NFFE to certify to the following statements—

(A)(*1*) The NFFE has not had any events of default described in paragraph (c)(4)(v) of this section; or

(*2*) If there are any events of default, appropriate measures were taken to remediate such failures and to prevent such failures from recurring; and

(B) With respect to any failure to report to the extent required under paragraph (c)(3)(ii), the NFFE has corrected such failure by filing the appropriate information returns; and

(vii) The NFFE has not had its status as a direct reporting NFFE revoked by the IRS.

(4) *Election to be treated as a direct reporting NFFE*—(i) *Manner of making election*. A NFFE may elect to be treated as a direct reporting NFFE by registering on Form 8957 (or such other form as the IRS may prescribe) with the IRS to obtain a GIIN pursuant to the procedures prescribed by the IRS.

(ii) *Effective date of election*. The election is effective upon the issuance of a GIIN to the NFFE.

(iii) *Revocation of election by NFFE*. The election may not be revoked by the NFFE without the consent of the Commissioner. The NFFE must notify its sponsoring entity (if applicable) and all relevant withholding agents if it revokes its election.

(iv) *Revocation of election by Commissioner*. The election may be revoked by the Commissioner upon an event of default described in paragraph (v) of this section.

(v) *Event of default*. An event of default occurs if a direct reporting NFFE fails to perform any of the obligations described in (c)(3)(i) through (vi) of this

section. An event of default also includes any misrepresentation of a material fact to the IRS.

(vi) *Notice of event of default.* Following an event of default known by or disclosed to the IRS, the IRS will deliver to the NFFE a notice of default specifying the event of default. The IRS will request that the NFFE remediate the event of default within a specified time period. The NFFE must respond to the notice of default and provide information responsive to an IRS request for information or state the reasons why the NFFE does not agree that an event of default has occurred. If the NFFE does not provide a response within the specified time period, the IRS may, at its sole discretion, deliver a notice to the NFFE that its election to be treated as a direct reporting NFFE has been revoked. A NFFE may request, within 90 days of receipt, reconsideration of a notice of default or notice of revocation by written request to the Deputy Commissioner (International), LB&I.

(vii) *Remediation of event of default.* A NFFE will be permitted to remediate an event of default to the extent it agrees with the IRS on a remediation plan. The IRS may, as part of a remediation plan, require additional information from the NFFE.

(5) *Election by a direct reporting NFFE to be treated as a sponsored direct reporting NFFE.*

(i) *Definition of sponsored direct reporting NFFE.* A NFFE is a *sponsored direct reporting NFFE* if the NFFE is a direct reporting NFFE and if another entity, other than a nonparticipating FFI, has agreed with the NFFE to act as its sponsoring entity, as described in paragraph (c)(5)(ii) of this section.

(ii) *Requirements for sponsoring entity of a sponsored direct reporting NFFE.* A sponsoring entity meets the requirements of this paragraph (c)(5)(ii) if the sponsoring entity—

(A) Is authorized to act on behalf of the NFFE;

(B) Has registered with the IRS as a sponsoring entity;

(C) Has registered the NFFE with the IRS as a sponsored direct reporting NFFE;

(D) Agrees to perform, on behalf of the NFFE, all due diligence, reporting, and other requirements that the NFFE would have been required to perform as a direct reporting NFFE;

(E) Identifies the NFFE in all reporting completed on the NFFE's behalf;

(F) Complies with the certification and other requirements in paragraphs (f) and (g) of this section;

(G) Has not had its status as a sponsoring entity revoked; and

(H) Agrees to notify all relevant withholding agents and the IRS if its status as a sponsoring entity is revoked, if it otherwise ceases to be the sponsoring entity of any of its sponsored direct reporting NFFEs (for example, if the sponsored direct reporting NFFE changes sponsors), or if the status of any of its sponsored direct reporting NFFEs has been revoked.

(iii) *Revocation of status as sponsoring entity.* The IRS may revoke a sponsoring entity's status as a sponsoring entity with respect to all sponsored direct reporting NFFEs if there is a material failure by the sponsoring entity to comply with its obligations under paragraph (c)(5)(ii) of this section with respect to any sponsored direct reporting NFFE.

(iv) *Liability of sponsoring entity.* A sponsoring entity is not liable for any failure to comply with the obligations contained in paragraph (c)(5)(ii) of this section. A sponsored direct reporting NFFE will remain liable for all of its chapter 4 obligations without regard to any failure of its sponsoring entity to comply with the obligations contained in paragraph (c)(5)(ii) of this section that the sponsoring entity has agreed to undertake on behalf of the NFFE.

(d) [Reserved] For further guidance, see §1.1472–1(d).

(1) *In general.* For purposes of this section, except in the case of a payee that is a QI, WP, or WT, a withholding agent may treat a withholdable payment as beneficially owned by the payee as determined under §1.1471–3. Thus, a withholding agent may treat a withholdable payment as beneficially owned by an excepted NFFE (other than a QI, WP, or WT) if the withholding agent can reliably associate the payment with valid documentation to determine the payee's status as an excepted NFFE under the rules of §1.1471–3(d).

(2) *Payments made to a NFFE that is a QI, WP, or WT.* A withholding agent may treat the payee of a withholdable payment as a NFFE that is a QI, WP, or WT if the withholding agent can reliably associate the payment with valid documentation to determine the payee's status as such under the rules of § 1.1471–3(b)(3) and (d).

(3) through (5) [Reserved] For further guidance, see § 1.1472–1(d)(3) through (5).

(e) [Reserved] For further guidance, see § 1.1472–1(e) through (e)(2).

(f) *Sponsoring entity verification.* [Reserved]

(g) *Sponsoring entity event of default.* [Reserved]

(h) [Reserved] For further guidance, see § 1.1472–1(h).

(i) *Expiration date.* The applicability of this section expires on February 28, 2017.

[T.D. 9657, 79 FR 12858, Mar. 6, 2014; 79 FR 37180, July 1, 2014]

§ 1.1473–1 Section 1473 definitions.

(a) *Definition of withholdable payment*—(1) *In general.* Except as otherwise provided in this paragraph (a) and § 1.1471–2(b) (regarding grandfathered obligations), the term *withholdable payment* means—

(i) Any payment of U.S. source FDAP income (as defined in paragraph (a)(2) of this section); and

(ii) For any sales or other dispositions occurring after December 31, 2016, any gross proceeds from the sale or other disposition (as defined in paragraph (a)(3)(i) of this section) of any property of a type that can produce interest or dividends that are U.S. source FDAP income.

(2) *U.S. source FDAP income defined*—(i) *In general*—(A) *FDAP income defined.* For purposes of chapter 4, the term *FDAP income* means fixed or determinable annual or periodic income that is described in § 1.1441–2(b)(1) or § 1.1441–2(c) (excluding income described in paragraph (a)(2)(vi) of this section or § 1.1441–2(b)(2) (such as gains derived from the sale of certain property)) and including the types of income enumerated in paragraphs (a)(2)(iii) through (v) of this section.

(B) *U.S. source.* The term *U.S. source* means derived from sources within the United States. A payment is derived from sources within the United States if it is income treated as derived from sources within the United States under sections 861 through 865 and other relevant provisions of the Code. In the case of a payment of FDAP income for which the source cannot be determined at the time of payment, see § 1.1471–2(a)(5).

(C) *Exceptions to withholding on U.S. source FDAP income not applicable under chapter 4.* Except as otherwise provided in paragraph (a)(4) of this section, no exception to withholding on U.S. source FDAP income for purposes other than chapter 4 applies for purposes of determining whether a payment of such income is a withholdable payment under chapter 4. Thus, for example, an exclusion from an amount subject to withholding under § 1.1441–2(a) or an exclusion from taxation under section 881 does not apply for purposes of determining whether such income constitutes a withholdable payment.

(ii) *Special rule for certain interest.* Interest that is described in section 861(a)(1)(A) (relating to interest paid by foreign branches of domestic corporations and partnerships) is treated as U.S. source FDAP income.

(iii) *Original issue discount.* The rules described in § 1.1441–2(b)(3)(ii) for determining when an amount representing original issue discount is subject to withholding for chapter 3 purposes apply for purposes of determining when original issue discount from sources within the United States is U.S. source FDAP income.

(iv) *REMIC residual interests.* U.S. source FDAP income includes an amount described in § 1.1441–2(b)(5).

(v) *Withholding liability of payee that is satisfied by withholding agent.* If a withholding agent satisfies a withholding liability arising under chapter 4 with respect to a withholdable payment from the withholding agent's own funds, the satisfaction of such liability is treated as an additional payment of U.S. source FDAP income to the payee to the extent that the withholding agent's satisfaction of such withholding liability also satisfies a tax liability of the payee under section 881

or 871 with respect to the same payment, and the satisfaction of the tax liability constitutes additional income to the payee under §1.1441–3(f) that is U.S. source FDAP income. In such case, the amount of any additional payment treated as made by the withholding agent for purposes of this paragraph (a)(2)(v) and any tax liability resulting from such payment shall be determined under §1.1441–3(f). See §1.1474–6 regarding the coordination of the withholding requirements under chapters 3 and 4 in the case of a withholdable payment that is also subject to withholding under chapter 3.

(vi) [Reserved] For further guidance, see §1.1473–1T(a)(2)(vi).

(vii) *Payment of U.S. source FDAP income*—(A) *Amount of payment of U.S. source FDAP income.* The amount of U.S. source FDAP income is the gross amount of the payment of such income, unreduced by any deductions or offsets. The rules of §1.1441–3(b)(1) shall apply to determine the amount of an interest payment on an interest-bearing obligation. In the case of a corporate distribution, the distributing corporation or intermediary shall determine the portion of the distribution that is treated as U.S. source FDAP income under this paragraph (a)(2) in the same manner as the distributing corporation or intermediary determines the portion of the distribution subject to withholding under §1.1441–3(c). Any portion of a payment on a debt instrument or a corporate distribution that does not constitute U.S. source FDAP income under this paragraph (a)(2) solely because of a provision other than the source rules of sections 861 through 865 shall be taken into account as gross proceeds under paragraph (a)(3) of this section. For rules regarding the determination of the amount of a payment of U.S. source FDAP income under paragraph (a)(2) of this section made in a medium other than U.S. dollars, see §1.1441–3(e). For determining the amount of a payment of a dividend equivalent, see section 871(m) and the regulations thereunder.

(B) *When payment of U.S. source FDAP income is made.* A payment is considered made when the amount would be includible in the income of the beneficial owner under the U.S. tax principles governing the cash method of accounting. If an FFI acts as an intermediary with respect to a payment of U.S. source FDAP income, the FFI will be treated as making a payment of such U.S. source FDAP income to the person with respect to which the FFI acts as an intermediary when it pays or credits such amount to such person. The following rules also apply for purposes of this paragraph (a)(2)(vii)(B): §§1.1441–2(e)(2) (regarding when a payment is considered made in the case of income allocated under section 482); 1.1441–2(e)(3) (regarding blocked income); 1.1441–2(e)(4) (regarding when a dividend is considered paid); and 1.1441–2(e)(5) (regarding when interest is considered paid if a foreign person has made an election under §1.884–4(c)(1)).

(3) *Gross proceeds defined*—(i) *Sale or other disposition*—(A) *In general.* Except as otherwise provided in this paragraph (a)(3)(i), the term *sale or other disposition* means any sale, exchange, or disposition of property described in paragraph (a)(3)(ii) of this section that requires recognition of gain or loss under section 1001(c), determined without regard to whether the owner of such property is subject to U.S. federal income tax with respect to such sale, exchange, or disposition. The term sale or other disposition includes (but is not limited to) sales of securities; redemptions of stock; retirements and redemptions of indebtedness; entering into short sales; and a closing transaction under a forward contract, option, or other instrument that is otherwise a sale. Such term further includes a distribution from a corporation to the extent the distribution is a return of capital or a capital gain to the beneficial owner of the payment. Such term does not include grants or purchases of options, exercises of call options for physical delivery, transfers of securities for which gain or loss is excluded from recognition under section 1058, or mere executions of contracts that require delivery of personal property or an interest therein. For purposes of this section only, a constructive sale under section 1259 or a mark to fair market value under section 475 or 1296 is not a sale or disposition.

(B) *Special rule for sales effected by brokers.* In the case of a sale effected by

a broker (with the term *effect* defined in § 1.6045–1(a)(10)), a sale means a sale as defined in § 1.6045–1(a)(9) with respect to property described in paragraph (a)(3)(ii) of this section.

(C) *Special rule for gross proceeds from sales settled by a clearing organization.* In the case of a clearing organization that settles sales and purchases of securities between members of such organization on a net basis, the gross proceeds from sales or dispositions are limited to the net amount paid or credited to a member's account that is associated with sales or other dispositions of property described in paragraph (a)(3)(ii) of this section by such member as of the time that such transactions are settled under the settlement procedures of such organization.

(ii) *Property of a type that can produce interest or dividend payments that would be U.S. source FDAP income*—(A) *In general.* Property is of a type that can produce interest or dividends payments that would be U.S. source FDAP income if the property is of a type that ordinarily gives rise to the payment of interest or dividends that would constitute U.S. source FDAP income, regardless of whether any such payment is made during the period such property is held by the person selling or disposing of such property. Thus, for example, stock issued by a domestic corporation is property of a type that can produce dividends from sources within the United States if a dividend from such corporation would be from sources within the United States, regardless of whether the stock pays dividends at regular intervals and regardless of whether the issuer has any plans to pay dividends or has ever paid a dividend with respect to the stock.

(B) *Contracts producing dividend equivalent payments.* In the case of any contract that results in the payment of a dividend equivalent as defined in section 871(m) and the regulations thereunder (including as part of a termination payment), such contract shall be treated as property that is described in paragraph (a)(3)(ii)(A) of this section, without regard to whether the taxpayer is a foreign person subject to U.S. federal income tax with respect to such transaction. To the extent that the proceeds from a termination payment include the payment of a dividend equivalent, the gross amount of such proceeds will not include the amount of such dividend equivalent.

(C) *Regulated investment company distributions.* The amount of a distribution that is designated as a capital gain dividend under section 852(b)(3)(C) or 871(k)(2) is a payment of gross proceeds to the extent attributable to property described in paragraph (a)(3)(ii)(A) of this section.

(iii) *Payment of gross proceeds*—(A) *When gross proceeds are paid.* With respect to a sale that is effected by a broker that results in a payment of gross proceeds as defined in this paragraph (a)(3), the date the gross proceeds are considered paid is the date that the proceeds of such sale are credited to the account of or otherwise made available to the person entitled to the payment.

(B) *Amount of gross proceeds.* Except as otherwise provided in this paragraph (a)(3)—

(*1*) The amount of gross proceeds from a sale or other disposition means the total amount realized as a result of a sale or other disposition of property described in paragraph (a)(3)(ii) under section 1001(b);

(*2*) In the case of a sale effected by a broker, the amount of gross proceeds from a sale or other disposition means the total amount paid or credited to the account of the person entitled to the payment increased by any amount not so paid by reason of the repayment of margin loans. The broker may (but is not required to) take commissions with respect to the sale into account in determining the amount of gross proceeds;

(*3*) In the case of a corporate distribution, the amount treated as gross proceeds excludes the amount described in paragraph (a)(2)(vii)(A) of this section that is treated as U.S. source FDAP income;

(*4*) [Reserved] For further guidance, see § 1.1473–1T(a)(3)(iii)(B)(*4*).

(*5*) In the case of a sale, retirement, or redemption of a debt obligation, gross proceeds excludes the amount of original issue discount treated as U.S. source FDAP income under paragraph (a)(2)(iii) of this section.

(4) *Payments not treated as withholdable payments.* The following payments are not withholdable payments under paragraph (a)(1) of this section—

(i) *Certain short-term obligations.* A payment of interest or original issue discount on short-term obligations described in section 871(g)(1)(B)(i).

(ii) *Effectively connected income.* Any payment to the extent it gives rise to an item of income that is taken into account under section 871(b)(1) or 882(a)(1) for the taxable year. An item of income is taken into account under section 871(b)(1) or 882(a)(1) when the income is (or is deemed to be) effectively connected with the conduct of a trade or business in the United States and is includible in the beneficial owner's gross income for the taxable year. An amount of income shall not be treated as taken into account under section 871(b)(1) or 882(a)(1) if the income is (or is deemed to be) effectively connected with the conduct of a trade or business in the United States and the beneficial owner claims an exception from tax under an income tax treaty because the income is not attributable to a permanent establishment in the United States.

(iii) *Excluded nonfinancial payments.* Payments for the following: services (including wages and other forms of employee compensation (such as stock options)), the use of property, office and equipment leases, software licenses, transportation, freight, gambling winnings, awards, prizes, scholarships, and interest on outstanding accounts payable arising from the acquisition of goods or services. Notwithstanding the preceding sentence, excluded nonfinancial payments do not include: payments in connection with a lending transaction (including loans of securities), a forward, futures, option, or notional principal contract, or a similar financial instrument; premiums for insurance contracts or annuity contracts; amounts paid under cash value insurance or annuity contracts; dividends; interest (including substitute interest described in § 1.861–2(a)(7)) other than interest described in the preceding sentence; gross proceeds other than gross proceeds described in paragraph (a)(4)(iv) of this section; investment advisory fees; custodial fees; and bank or brokerage fees.

(iv) *Gross proceeds from sales of excluded property.* Gross proceeds from the sale or other disposition of any property that can produce U.S. source FDAP income if all such U.S. source FDAP income would be excluded from the definition of withholdable payment under paragraphs (a)(4)(i) through (iii) of this section.

(v) *Fractional shares.* Payments arising in sales described in § 1.6045–1(c)(3)(ix).

(vi) [Reserved] For further guidance, see § 1.1473–1T(a)(4)(vi).

(vii) [Reserved] For further guidance, see § 1.1473–1T(a)(4)(vii).

(5) *Special payment rules for flow-through entities, complex trusts, and estates*—(i) [Reserved] For further guidance, see § 1.1473–1T(a)(5)(i).

(ii) [Reserved] For further guidance, see § 1.1473–1T(a)(5)(ii).

(iii) [Reserved] For further guidance, see § 1.1473–1T(a)(5)(iii).

(iv) [Reserved] For further guidance, see § 1.1473–1T(a)(5)(iv).

(v) [Reserved] For further guidance, see § 1.1473–1T(a)(5)(v).

(vi) [Reserved] For further guidance, see § 1.1473–1T(a)(5)(vi).

(vii) *Special rules for determining when gross proceeds are treated as paid to a partner, owner, or beneficiary of a flow-through entity.* [Reserved]

(6) *Reporting of withholdable payments.* See § 1.1474–1(c) and (d) for a description of the income tax return and information reporting requirements applicable to a withholding agent that has made a withholdable payment.

(7) *Example. Satisfaction of payee's chapter 4 liability by withholding agent.* Recalcitrant account holder (RA) is entitled to receive a payment of $100 of U.S. source interest from withholding agent, WA. The payment is subject to withholding under chapter 4, but is not subject to withholding under section 1442, and RA has no substantive tax liability under section 881 with respect to this payment. WA pays the full $100 to RA and, after the date of payment, pays the $30 of tax due under chapter 4 to the IRS from its own funds. Because no underlying tax liability of RA is satisfied, and further because WA and RA did not execute any agreement for

WA to pay this tax and WA did not have an obligation to pay this tax apart from the requirements of chapter 4, WA's payment of the tax does not give rise to a deemed payment of U.S. source FDAP income to RA under paragraph (a)(2)(v) of this section. Thus, WA is not required to pay any additional tax with respect to this payment for purposes of chapter 4.

(b) *Substantial U.S. owner*—(1) *Definition*. Except as otherwise provided in paragraph (b)(4) or (5) of this section, the term *substantial United States owner* (or *substantial U.S. owner*) means:

(i) With respect to any foreign corporation, any specified U.S. person that owns, directly or indirectly, more than 10 percent of the stock of such corporation (by vote or value);

(ii) With respect to any foreign partnership, any specified U.S. person that owns, directly or indirectly, more than 10 percent of the profits interests or capital interests in such partnership; and

(iii) In the case of a trust—

(A) Any specified U.S. person treated as an owner of any portion of the trust under sections 671 through 679; and

(B) Any specified U.S. person that holds, directly or indirectly, more than 10 percent of the beneficial interests of the trust.

(2) *Indirect ownership of foreign entities*. For purposes of determining a person's interest in a foreign entity, the following rules shall apply.

(i) *Indirect ownership of stock*. Stock of a foreign corporation that is owned directly or indirectly by an entity (other than a participating FFI, a deemed-compliant FFI (excluding an owner-documented FFI), a U.S. financial institution, a U.S. person that is not a specified U.S. person, an exempt beneficial owner, or an excepted NFFE) that is a corporation, partnership, or trust shall be considered as being owned proportionately by such entity's shareholders, partners, or, in the case of a trust, persons treated as owners under sections 671 through 679 of any portion of the trust that includes the stock, and the beneficiaries of the trust. Stock considered to be owned by a person by reason of the application of the preceding sentence shall, for purposes of applying such sentence, be treated as actually owned by such person.

(ii) *Indirect ownership in a foreign partnership or ownership of a beneficial interest in a foreign trust*. A capital or profits interest in a foreign partnership or an ownership or beneficial interest (as described in paragraph (b)(3) of this section) in a foreign trust that is owned or held directly or indirectly by an entity (other than a participating FFI, a deemed-compliant FFI (excluding an owner-documented FFI), a U.S. financial institution, a U.S. person that is not a specified U.S. person, an exempt beneficial owner, or an excepted NFFE) that is a corporation, partnership, or trust shall be considered as being owned or held proportionately by such entity's shareholders, partners, or, in the case of a trust, persons treated as owners under sections 671 through 679 of any portion of the trust that includes the partnership or beneficial trust interest, and the beneficiaries of the trust. Partnership or beneficial trust interests considered to be owned or held by a person by reason of the application of the preceding sentence shall, for purposes of applying such sentence, be treated as actually owned or held by such person.

(iii) *Ownership and holdings through options*. If a specified U.S. person holds, directly or indirectly (applying the principles of paragraphs (b)(2)(i) and (ii) of this section) an option to acquire stock in a foreign corporation, a capital or profits interest in a foreign partnership, or an ownership or beneficial interest in a foreign trust, such person is considered to own the underlying equity or other ownership interest in such foreign entity for purposes of this paragraph (b). For purposes of the preceding sentence, an option to acquire such an option, and each one of a series of such options, shall be considered an option to acquire such stock or other ownership interest described in this paragraph (b)(2)(iii).

(iv) *Determination of proportionate interest*. For purposes of this paragraph (b), and except as otherwise provided in paragraph (b)(3) of this section, the determination of a person's proportionate interest in a foreign corporation, partnership, or trust is based on all of the relevant facts and circumstances. In

making this determination, any arrangement that artificially decreases a specified U.S. person's proportionate interest in any such entity will be disregarded in determining whether such person is a substantial U.S. owner. In lieu of applying the rules of this paragraph (b)(2) to determine whether an owner's proportionate interest in a foreign entity meets the 10 percent threshold described in paragraph (b)(1) of this section, the entity or its withholding agent may opt to treat the owner as a substantial U.S. owner.

(v) [Reserved] For further guidance, see §1.1473–1T(b)(2)(v).

(3) *Beneficial interest in a foreign trust*—(i) *In general*. For purposes of paragraph (b)(1)(iii)(B) of this section, a person holds a beneficial interest in a foreign trust if such person has the right to receive directly or indirectly (for example, through a nominee) a mandatory distribution or may receive, directly or indirectly, a discretionary distribution from the trust. For purposes of this section, a *mandatory distribution* means a distribution that is required to be made pursuant to the terms of the trust document. A *discretionary distribution* means a distribution that is made to a person at the discretion of the trustee or a person with a limited power of appointment of such trust.

(ii) *Determining the 10 percent threshold in the case of a beneficial interest in a foreign trust*. A person will be treated as holding directly or indirectly more than 10 percent of the beneficial interest in a foreign trust if—

(A) The person receives, directly or indirectly, only discretionary distributions from the trust and the fair market value of the currency or other property distributed, directly or indirectly, from the trust to such person during the prior calendar year exceeds 10 percent of the value of either all of the distributions made by the trust during that year or all of the assets held by the trust at the end of that year;

(B) The person is entitled to receive, directly or indirectly, mandatory distributions from the trust and the value of the person's interest in the trust, as determined under section 7520, exceeds 10 percent of the value of all the assets held by the trust as of the end of the prior calendar year; or

(C) The person is entitled to receive, directly or indirectly, mandatory distributions and may receive, directly or indirectly, discretionary distributions from the trust, and the value of the person's interest in the trust, determined as the sum of the fair market value of all of the currency or other property distributed from the trust at the discretion of the trustee during the prior calendar year to the person and the value of the person's interest in the trust as determined under section 7520 at the end of that year, exceeds either 10 percent of the value of all distributions made by such trust during the prior calendar year or 10 percent of the value of all the assets held by the trust at the end of that year.

(4) *Exceptions*—(i) *De minimis amount or value exception*. A specified U.S. person is not treated as a substantial U.S. owner if—

(A) The fair market value of the currency or other property distributed, directly or indirectly, from the trust to such specified U.S. person during the prior calendar year is $5,000 or less and,

(B) In the case of a specified U.S. person that is entitled to receive mandatory distributions, the value of such person's interest in the trust is $50,000 or less.

(ii) *Trusts wholly owned by certain U.S. persons*. A trust that is treated as owned only by U.S. persons under sections 671 through 679 is not required to treat any of its beneficiaries as substantial U.S. owners.

(5) *Special rule for certain financial institutions*. In the case of any financial institution described in §1.1471–5(e)(1)(iii) or (iv) (referring to investment entities and specified insurance companies), this section shall be applied by substituting ''0 percent'' for ''10 percent'' in each place that it appears. Additionally, in the case of a financial institution described in §1471–5(e)(1)(iii) that is a trust, the rules of paragraph (b)(3) and (4) of this section (referring to beneficial interests in a trust) shall be applied by substituting ''calendar year'' for ''prior calendar year'' in each place that it appears.

(6) *Determination dates for substantial U.S. owners*. A foreign entity may make

the determination of whether it has one or more direct or indirect substantial U.S. owners as of the last day of such entity's accounting year or as of the date on which such foreign entity provides the documentation described in §1.1471–3(d) to the withholding agent for which such determination is required to be made. See §1.1471–4(c) for when a participating FFI is required to obtain documentation with respect to its account holders.

(7) *Examples*. The following examples illustrate the provisions of paragraph (b) of this section:

Example 1. Indirect ownership. U, a specified U.S. person, owns directly 100% of the sole class of stock of F1, a foreign corporation. F1 owns directly 90% of the sole class of stock of F2, a foreign corporation, and U owns directly the remaining 10% of the sole class of stock of F2. F2 owns directly 10% of the sole class of stock of F3, a foreign corporation, and U owns directly 3% of the sole class of stock of F3. U is treated as owning 13% (3% directly and 10% indirectly) of the sole class of stock of F3 and 100% (10% directly and 90% indirectly) of the sole class of stock of F2 for purposes of this paragraph (b). U is a substantial U.S. owner of F1, F2, and F3.

Example 2. Indirect ownership through entities that are specified U.S. persons. U, a specified U.S. person, owns directly 100% of the sole class of stock of US1, a U.S. corporation that is a specified U.S. person. US1 owns directly 100% of the sole class of stock of US2, a U.S. corporation that is a specified U.S. person. US2 owns directly 15% of the sole class of stock of FC, a foreign corporation. For purposes of this paragraph (b), U, US1, and US2 are all substantial U.S. owners of FC.

Example 3. Determining the 10% threshold in the case of a beneficial interest in a foreign trust. U, a U.S. citizen, holds an interest in FT1, a foreign trust, under which U may receive discretionary distributions from FT1. U also holds an interest in FT2, a foreign trust, and FT2, in turn, holds an interest in FT1 under which FT2 may receive discretionary distributions from FT1. U receives $25,000 from FT1 in Year 1. FT2 receives $120,000 from FT1 in Year 1 and distributes the entire amount to its beneficiaries in Year 1. The distribution from FT1 is FT2's only source of income and FT2's distributions in Year 1 total $120,000. U receives $40,000 from FT2 in Year 1. FT1's distributions in Year 1 total $750,000. U's discretionary interest in FT1 is valued at $65,000 at the end of Year 1 and therefore does not meet the 10% threshold as determined under paragraph (b)(3)(ii)(A). U's discretionary interest in FT2, however, is valued at $40,000 at the end of Year 1 and therefore meets the 10% threshold as determined under paragraph (b)(3)(ii)(A).

Example 4. Determining ownership (determination date). F, a foreign corporation that is an NFFE, has a calendar year accounting year. On December 31 of Year 1, U, a specified U.S. person, owns 12% of the sole class of outstanding stock of F. In March of Year 2, F redeems a portion of U's stock and reduces U's ownership of F to 9%. In May of Year 2, F opens an account with P, a participating FFI, and delivers to P the documentation required under §1.1471–3(d). At the time F opens its account with P, U is the only specified U.S. person that directly or indirectly owns stock in F. Because of the redemption, U's interest in F is 9% on the date F opens its account with P. Pursuant to paragraph (b)(6) of this section, F may determine whether it has a substantial U.S. owner as of the date it provides the documentation required under §1.1471–3(d) to P, which would be the day it opens the account. As a result, F may indicate in its §1.1471–3(d) documentation that it has no substantial U.S. owners.

(c) *Specified U.S. person*. The term *specified United States person* (or *specified U.S. person*) means any U.S. person other than—

(1) A corporation the stock of which is regularly traded on one or more established securities markets, as described in §1.1472–1(c)(1)(i);

(2) Any corporation that is a member of the same expanded affiliated group as a corporation described in §1.1472–1(c)(1)(i);

(3) Any organization exempt from taxation under section 501(a) or an individual retirement plan as defined in section 7701(a)(37);

(4) The United States or any wholly owned agency or instrumentality thereof;

(5) Any State, the District of Columbia, any U.S. territory, any political subdivision of any of the foregoing, or any wholly owned agency or instrumentality of any one or more of the foregoing;

(6) Any bank as defined in section 581;

(7) Any real estate investment trust as defined in section 856;

(8) Any regulated investment company as defined in section 851 or any entity registered with the Securities Exchange Commission under the Investment Company Act of 1940 (15 U.S.C. 80a–64);

(9) Any common trust fund as defined in section 584(a);

(10) Any trust that is exempt from tax under section 664(c) or is described in section 4947(a)(1);

(11) A dealer in securities, commodities, or derivative financial instruments (including notional principal contracts, futures, forwards, and options) that is registered as such under the laws of the United States or any State;

(12) A broker; and

(13) Any tax exempt trust under a section 403(b) plan or section 457(g) plan.

(d) *Withholding agent*—(1) *In general.* Except as provided in this paragraph (d), the term *withholding agent* means any person, U.S. or foreign, in whatever capacity acting, that has the control, receipt, custody, disposal, or payment of a withholdable payment or foreign passthru payment.

(2) *Participating FFIs and registered deemed-compliant FFIs as withholding agents.* The term withholding agent includes a participating FFI that has the control, receipt, custody, disposal, or payment of a passthru payment (as defined in §1.1471–5(h)). The term withholding agent also includes a registered deemed-compliant FFI to the extent that such FFI is required to withhold on a passthru payment as part of the conditions for maintaining its status as a deemed-compliant FFI under §1.1471–5(f)(1)(ii). For the withholding requirements of a participating FFI, including the requirement to withhold with respect to limited branches and limited FFIs that are in the same expanded affiliated group as the participating FFI, see §§1.1471–4(b) and 1.1472–1(a).

(3) *Grantor trusts as withholding agents.* The term withholding agent includes a grantor trust with respect to a withholdable payment or a foreign passthru payment (in the case of a grantor trust that is a participating FFI) made to a person treated as an owner of the trust under sections 671 through 679. For purposes of determining when a payment is treated as made to such a person, see §1.1473–1(a)(5)(v).

(4) *Deposit and return requirements.* See §1.1474–1(b) for a withholding agent's requirement to deposit any tax withheld, and §1.1474–1(c) and (d) for the requirement to file income tax and information returns (including the special allowance in §1.1474–1(b)(2) for participating FFIs with respect to dormant accounts).

(5) *Multiple withholding agents.* When several persons qualify as a withholding agent with respect to a single payment, only one tax is required to be withheld and deposited. See §1.1474–1(a). A person who, as a nominee described in §1.6031(c)–1T, has furnished to a partnership all of the information required to be furnished under §1.6031(c)–1T(a) shall not be treated as a withholding agent if the person has notified the partnership that it is treating the provision of information to the partnership as a discharge of its obligations as a withholding agent.

(6) *Exception for certain individuals.* An individual is not a withholding agent with respect to a withholdable payment made by the individual outside the course of such individual's trade or business (including as an agent with respect to making or receiving such payment).

(e) *Foreign entity.* The term *foreign entity* means any entity that is not a U.S. person and includes a territory entity.

(f) *Effective/applicability date.* This section generally applies January 28, 2013. For other dates of applicability see §§1.1473–1(a)(1)(ii) and 1.1473–1(a)(4)(vi).

[T.D. 9610, 78 FR 5981, Jan. 28, 2013; 78 FR 55208, Sept. 10, 2013, as amended by T.D. 9657, 79 FR 12860, Mar. 6, 2014]

§ 1.1473–1T Section 1473 definitions (temporary).

(a) [Reserved] For further guidance, see §1.1473–1(a).

(1) [Reserved] For further guidance, see §1.1473–1(a)(1) through (a)(1)(ii).

(2) [Reserved] For further guidance, see §1.1473–1(a)(2).

(i) through (v) [Reserved] For further guidance, see §1.1473–1(a)(2)(i) through (v).

(vi) *Special rule for sales of interest bearing debt obligations.* Income that is otherwise described as U.S. source FDAP income in paragraphs (a)(2)(i) through (v) of this section does not include an amount of interest accrued on

the date of a sale or exchange of an interest bearing debt obligation if the sale occurs between two interest payment dates and is not part of a plan described in § 1.1441–3(b)(2)(ii).

(vii) [Reserved] For further guidance, see § 1.1473–1(a)(2)(vii) through (a)(2)(vii)(B).

(3) [Reserved] For further guidance, see § 1.1473–1(a)(3).

(i) through (ii) [Reserved] For further guidance, see § 1.1473–1(a)(3)(i) through (a)(3)(ii)(C).

(iii) [Reserved] For further guidance, see § 1.1473–1(a)(3)(iii).

(A) [Reserved] For further guidance, see § 1.1473–1(a)(3)(iii)(A).

(B) [Reserved] For further guidance, see § 1.1473–1(a)(3)(iii)(B).

(*1*) through (*3*) [Reserved] For further guidance, see § 1.1473–1(a)(3)(iii)(B)(*1*) through (*3*).

(*4*) In the case of a sale of an obligation described in paragraph (a)(2)(vi), gross proceeds includes any interest accrued between interest payment dates other than an amount described in paragraph (a)(2)(vi) of this section that is treated as U.S. source FDAP income; and

(*5*) [Reserved] For further guidance, see § 1.1473–1(a)(3)(iii)(B)(*4*).

(4) [Reserved] For further guidance, see § 1.1473–1(a)(4).

(i) through (v) [Reserved] For further guidance, see § 1.1473–1(a)(4)(i) through (v).

(vi) *Offshore payments of U.S. source FDAP income prior to 2017 (transitional).* A payment with respect to an offshore obligation (as defined in § 1.1471–1(b)(88)) made prior to January 1, 2017, if such payment is U.S. source FDAP income and made by a person that is not acting as an intermediary or as a WP or WT with respect to the payment. Additionally, a payment with respect to an account, obligation, contract, or other instrument that is issued or maintained by an entity other than a financial institution and that would be treated as an offshore obligation under § 1.6049–5(c)(1) (applied by substituting the term *entity* for the term *financial institution (as defined in § 1.1471–5(e))* in each place that it appears), made prior to January 1, 2017, if such payment is U.S. source FDAP and made by a person that is not acting as an intermediary or as a WP or WT with respect to the payment is not a withholdable payment under paragraph (a)(1) of this section. The exception for offshore payments of U.S. source FDAP income provided in the preceding sentences shall not apply, however, in the case of a flow-through entity that has a residual withholding requirement with respect to its partners, owners, or beneficiaries under § 1.1471–2(a)(2)(ii), or in the case of payments made with respect to debt or equity issued by a U.S. person (excluding interest payments made by a foreign branch of a U.S. financial institution with respect to depository accounts it maintains). For purposes of this paragraph (a)(4)(vi), an intermediary includes a person that acts as a qualified securities lender as defined for purposes of chapter 3 and does not include a person acting as an insurance broker with respect to premiums.

(vii) *Collateral arrangements prior to 2017 (transitional).* A payment made prior to January 1, 2017, by a secured party, or to a secured party other than a nonparticipating FFI, with respect to collateral securing one or more transactions under a collateral arrangement, provided that only a commercially reasonable amount of collateral is held by the secured party (or by a third party for the benefit of the secured party) as part of the collateral arrangement. For purposes of this paragraph (a)(4)(vii), the term *transaction* generally includes a debt instrument, a derivative financial instrument (including a notional principal contract, future, forward, and option), and any securities lending transaction, sale-repurchase transaction, margin loan, or substantially similar transaction that is subject to a collateral arrangement. Solely for purposes of this paragraph (a)(4)(vii), a secured party may provide documentation to the withholding agent indicating that it is the beneficial owner of a payment described in this paragraph (a)(4)(vii), and a withholding agent may rely on such certification for purposes of its requirements under § 1.1471–3(d) for determining whether withholding under chapter 4 applies.

(5) [Reserved] For further guidance, see § 1.1473–1(a)(5).

(i) *In general.* This paragraph (a)(5) provides special rules for a flow-through entity, complex trust, or estate to determine when such entity must treat a payment of U.S. source FDAP income that is also a withholdable payment as having been paid by such entity to its partners, owners, or beneficiaries (as applicable depending on the type of entity).

(ii) *Partnerships.* An amount of U.S. source FDAP income that is also a withholdable payment is treated as being paid to a partner under rules similar to the rules prescribing when withholding is required for chapter 3 purposes as described in §1.1441–5(b)(2)(i)(A).

(iii) *Simple trusts.* An amount of U.S. source FDAP income that is also a withholdable payment is treated as being paid to a beneficiary of a simple trust under rules similar to the rules prescribing when withholding is required for chapter 3 purposes as described in §1.1441–5(b)(2)(ii).

(iv) *Complex trusts and estates.* An amount of U.S. source FDAP income that is also a withholdable payment is treated as being paid to a beneficiary of a complex trust or estate under rules similar to the rules prescribing when withholding is required for chapter 3 purposes as described in §1.1441–5(b)(2)(iii).

(v) *Grantor trusts.* If an amount of U.S. source FDAP income that is also a withholdable payment is paid to a grantor trust, a person treated as an owner of all or a portion of such trust is treated as having been paid such income by the trust at the time it is received by or credited to the trust or portion thereof.

(vi) *Special rule for an NWP or NWT.* In the case of a partnership, simple trust, or complex trust that is an NWP or NWT, the rules described in paragraphs (a)(5)(ii) and (iii) of this section shall not apply, and U.S. source FDAP income that is also a withholdable payment is treated as being paid to the partner or beneficiary at the time the income is paid to the partnership or trust, respectively.

(vii) [Reserved] For further guidance, see §1.1473–1(a)(5)(vii).

(6) [Reserved] For further guidance, see §1.1473–1(a)(6).

(7) [Reserved] For further guidance, see §1.1473–1(a)(7).

(b) [Reserved] For further guidance, see §1.1473–1(b).

(1) [Reserved] For further guidance, see §1.1473–1(b)(1) through (b)(1)(iii)(B).

(2) [Reserved] For further guidance, see §1.1473–1(b)(2).

(i) through (iv) [Reserved] For further guidance, see §1.1473–1(b)(2)(i) through (iv).

(v) *Interests owned or held by a related person.* For purposes of determining whether a specified U.S. person is a substantial U.S. owner in a foreign entity described in paragraphs (b)(2)(i) through (iv) of this section, if a specified U.S. person owns or holds, directly or indirectly, any interest in the foreign entity, that interest must be aggregated with any such interest in the foreign entity owned or held, directly or indirectly, by a related person. For purposes of the preceding sentence, a related person is a person or spouse of a person described in §1.267(c)–1(a)(4), determined by reference to such specified U.S. person.

(3) through (7) [Reserved] For further guidance, see §1.1473–1(b)(3) through (7).

(c) through (f) [Reserved] For further guidance, see §1.1473–1(c) through (f).

(g) *Expiration date.* The applicability of this section expires on February 28, 2017.

[T.D. 9657, 79 FR 12861, Mar. 6, 2014; 79 FR 37180, July 1, 2014]

§1.1474–1 Liability for withheld tax and withholding agent reporting.

(a) *Payment and returns of tax withheld*—(1) *In general.* A withholding agent is required to deposit any tax withheld pursuant to chapter 4 as provided under paragraph (b) of this section and to make the returns prescribed by paragraphs (c) and (d) of this section. When several persons qualify as withholding agents with respect to a single payment, only one tax is required to be withheld and deposited.

(2) *Withholding agent liability.* A withholding agent that is required to withhold with respect to a payment under §1.1471–2(a), 1.1471–4(b) (in the case of a participating FFI), or 1.1472–1(b) but fails either to withhold or to deposit any tax withheld as required under paragraph (b) of this section is liable

for the amount of tax not withheld and deposited.

(3) *Use of agents*—(i) *In general.* Except as otherwise provided in this paragraph (a)(3), a withholding agent may authorize an agent to fulfill its obligations under chapter 4. The acts of an agent of a withholding agent (including the receipt of withholding certificates, the payment of amounts subject to withholding, the withholding and deposit of tax withheld, and the reporting required on the relevant form) are imputed to the withholding agent on whose behalf it is acting.

(ii) *Authorized agent.* An agent is authorized only if—

(A) There is a written agreement between the withholding agent and the person acting as agent;

(B) A Form 8655, ''Reporting Agent Authorization,'' is filed with the IRS if the agent (including any sub-agent) is acting as a reporting agent for filing Form 1042 or making tax deposits and payments;

(C) Books and records and relevant personnel of the agent (including any sub-agent) are available to the withholding agent (on a continuous basis, including after termination of the relationship) in order to evaluate the withholding agent's compliance with the provisions of chapter 4; and

(D) The withholding agent remains fully liable for the acts of its agent (or any sub-agent) and does not assert any of the defenses that may otherwise be available, including under common law principles of agency, in order to avoid tax liability under the Code.

(iii) *Liability of withholding agent acting through an agent.* A withholding agent acting through an agent is liable for any failure of the agent, such as a failure to withhold an amount or make a payment of tax, in the same manner and to the same extent as if the agent's failure had been the failure of the withholding agent. For this purpose, the agent's actual knowledge or reason to know shall be imputed to the withholding agent. Except as otherwise provided in the QI, WP, or WT agreement, an agent of a withholding agent is subject to the same withholding and reporting obligations that apply to any withholding agent under the provisions of chapter 4 and does not benefit from the special procedures or exceptions that apply to a QI, WP, or WT. If the agent is a foreign person, however, a U.S. withholding agent may treat the acts of the foreign agent as its own for purposes of determining whether it has complied with the provisions of chapter 4. The withholding agent's liability under paragraph (a)(2) of this section will exist even if the agent is also a withholding agent and is itself separately liable for failure to comply with the provisions of chapter 4. The same tax, interest, or penalties, however, shall not be collected more than once.

(4) *Liability for failure to obtain documentation timely or to act in accordance with applicable presumptions*—(i) *In general.* A withholding agent that cannot reliably associate a payment with documentation on the date of payment and that does not withhold under §1.1471–2(a), 1.1471–4(b), or 1.1472–1(b), or withholds at less than the 30 percent rate prescribed, is liable under this section for the tax required to be withheld under §1.1471–2(a), 1.1471–4(b), or 1.1472–1(b) (including interest, penalties, or additions to tax otherwise applicable in respect of the failure to deduct and withhold) unless—

(A) The withholding agent has appropriately relied on the presumptions described in §1.1471–3(f) in order to treat the payment as exempt from withholding; or

(B) The withholding agent obtained after the date of payment valid documentation that meets the requirements of §1.1471–3(c)(7) to establish that the payment was, in fact, exempt from withholding.

(ii) *Withholding satisfied by another withholding agent.* If a withholding agent fails to deduct and withhold any amount required to be deducted and withheld under §1.1471–2(a), 1.1471–4(b), or 1.1472–1(b), and the tax is satisfied by another withholding agent or is otherwise paid, then the amount of tax required to be deducted and withheld shall not be collected from the first-mentioned withholding agent. However, the withholding agent is not relieved from liability in any such case for any interest or penalties or additions to tax otherwise applicable in respect of the failure to deduct and withhold.

(b) *Payment of withheld tax*—(1) *In general*. Except as otherwise provided in this paragraph (b), every withholding agent who withholds tax pursuant to chapter 4 shall deposit such tax within the time provided in §1.6302–2(a) by electronic funds transfer as provided under §31.6302–1(h) of this chapter. If for any reason the total amount of tax required to be deposited for any calendar year pursuant to the income tax return described in paragraph (c) of this section has not been deposited pursuant to §1.6302–2, the withholding agent shall pay the balance of such tax due for such year at such place as the IRS shall specify. The tax shall be paid when filing the return described in paragraph (c)(1) of this section for such year, unless the IRS specifies otherwise. See §1.1471–4(b)(6) for the special rule allowing participating FFIs to set aside in escrow amounts withheld with respect to dormant accounts.

(2) *Special rule for foreign passthru payments and payments of gross proceeds that include an undetermined amount of income subject to tax*. [Reserved]

(c) *Income tax return*—(1) *In general*. Every withholding agent shall file an income tax return on Form 1042, ''Annual Withholding Tax Return for U.S. Source Income of Foreign Persons,'' (or such other form as the IRS may prescribe) to report chapter 4 reportable amounts (as defined in paragraph (d)(2)(i) of this section). This income tax return shall be filed on the same income tax return used to report amounts subject to reporting for chapter 3 purposes as described in §1.1461–1(b). The return must show the aggregate amount of payments that are chapter 4 reportable amounts and must report the tax withheld for the preceding calendar year by the withholding agent, in addition to any information required by the form and its accompanying instructions. Withholding certificates and other statements or information provided to a withholding agent are not required to be attached to the return. A Form 1042 must be filed under this paragraph (c)(1) even if no tax was required to be withheld for chapter 4 purposes during the preceding calendar year. The withholding agent must retain a copy of Form 1042 for the applicable period of limitations on assessment and collection with respect to the amounts required to be reported on the Form 1042. See section 6501 and the regulations thereunder for the applicable period of limitations. Adjustments to the total amount of tax withheld described in §1.1474–2 shall be stated on the return as prescribed by the form and its accompanying instructions.

(2) *Participating FFIs, registered deemed-compliant FFIs, and U.S. branches treated as U.S. persons*. A participating FFI or registered deemed-compliant FFI shall file Form 1042 in accordance with paragraph (c)(1) of this section to report chapter 4 reportable amounts for which the participating FFI or registered deemed-compliant FFI is required to file Form 1042–S, as described in paragraph (d)(4)(iii) of this section. A participating FFI or registered deemed-compliant FFI with a U.S. branch that is treated as a U.S. person must exclude from Form 1042 payments made and taxes withheld by such U.S. branch. A U.S. branch that is treated as a U.S. person shall file a separate Form 1042 in accordance with paragraph (c)(1) of this section and the instructions on the form to report chapter 4 reportable amounts.

(3) *Amended returns*. An amended return under this paragraph (c)(3) must be filed on Form 1042. An amended return must include such information as the form or its accompanying instructions shall require, including, with respect to any information that has changed from the time of the filing of the return, the information that was shown on the original return and the corrected information.

(d) *Information returns for payment reporting*—(1) *Filing requirement*—(i) [Reserved] For further guidance, see §1.1474–1T(d)(1)(i).

(ii) *Recipient*—(A) *Defined*. Except as otherwise provided in paragraph (d)(1)(ii)(B) of this section, the term *recipient* under this paragraph (d) means a person that is a recipient of a chapter 4 reportable amount, and includes—

(*1*) With respect to a payment of U.S. source FDAP income—

(*i*) A QI (including a QI that is a foreign branch of a U.S. person);

(*ii*) A WP or WT;

(*iii*) A participating FFI or a registered deemed-compliant FFI that is an NQI, NWP, or NWT (including a U.S. branch of a participating FFI that is not treated as a U.S. person) and that provides its withholding agent with sufficient information to determine the portion of the payment allocable to its reporting pools of recalcitrant account holders, payees that are nonparticipating FFIs, and payees that are U.S. persons described in paragraph (d)(4)(i)(B) of this section;

(*iv*) An account holder or payee to the extent that the withholding agent issues a Form 1042–S to such account holder or payee;

(*v*) An FFI that is a beneficial owner of the payment (including a limited branch of the FFI);

(*vi*) A U.S. branch of a participating FFI or registered deemed-compliant FFI that is treated as a U.S. person;

(*vii*) A territory financial institution treated as a U.S. person;

(*viii*) [Reserved] For further guidance, see §1.1474–1T(d)(1)(ii)(A)(*1*)(*viii*).

(*ix*) [Reserved] For further guidance, see §1.1474–1T(d)(1)(ii)(A)(*1*)(*ix*).

(*x*) An exempt beneficial owner of a payment, including when the payment is made to such owner through an FFI (including a nonparticipating FFI) that provides documentation and information sufficient for a withholding agent to determine the portion of the payment allocable to such owner; and

(*xi*) Any person (including a flow-through entity) or U.S. branch of a participating FFI or reporting Model 1 FFI receiving such income that is (or is deemed to be) effectively connected with the conduct of its trade or business in the United States;

(*2*) With respect to a payment other than U.S. source FDAP income. [Reserved]; and

(*3*) Any other person required to be reported as a recipient by Form 1042–S, its accompanying instructions, under an FFI agreement, or paragraph (d)(4)(iii) of this section with respect to the Form 1042–S reporting requirements of a participating FFI.

(B) *Persons that are not recipients*. Persons that are not recipients include—

(*1*) With respect to a payment of U.S. source FDAP income—

(*i*) [Reserved] For further guidance, see §1.1474–1T(d)(1)(ii)(B)(*1*)(*i*).

(*ii*) A financial institution (other than a nonparticipating FFI) to the extent that the withholding agent issues a Form 1042–S to the FFI's account holder or payee;

(*iii*) A participating FFI or a registered deemed-compliant FFI that is an NQI, NWP, or NWT (including a U.S. branch of a participating FFI that is not treated as a U.S. person) to the extent it provides its withholding agent with sufficient information to allocate the payment to its account holders and payees that are exempt from withholding under chapter 4;

(*iv*) An account holder or payee of a participating FFI or registered deemed-compliant FFI (including an account holder or payee of a U.S. branch of such FFI that is not treated as a U.S. person) that is included in the FFI's reporting pools described in paragraph (d)(4)(i)(B) of this section;

(*v*) A nonparticipating FFI that acts as an intermediary with respect to a payment or that is a flow-through entity (including a limited branch);

(*vi*) [Reserved] For further guidance, see §1.1474–1T(d)(1)(ii)(B)(*1*)(*vi*).

(*vii*) [Reserved] For further guidance, see §1.1474–1T(d)(1)(ii)(B)(*1*)(*vii*).

(*viii*) A territory financial institution to the extent provided in paragraph (d)(4)(i)(D)(*2*) and (*3*) of this section; and

(*ix*) [Reserved] For further guidance, see §1.1474–1T(d)(1)(ii)(B)(*1*)(*ix*).

(*2*) With respect to a payment other than U.S. source FDAP income. [Reserved]; and

(*3*) Any other person not treated as a recipient on Form 1042–S, its accompanying instructions, or under an FFI agreement.

(2) *Amounts subject to reporting*—(i) [Reserved] For further guidance, see §1.1474–1T(d)(2)(i).

(A) [Reserved] For further guidance, see §1.1474–1T(d)(2)(i)(A).

(B) [Reserved] For further guidance, see §1.1474–1T(d)(2)(i)(B).

(C) [Reserved] For further guidance, see §1.1474–1T(d)(2)(i)(C).

(ii) *Exception to reporting*. Except as otherwise provided in this paragraph (d)(2)(ii), a chapter 4 reportable amount does not include an amount paid to a

U.S. person if the withholding agent treats such U.S. person as a payee for purposes of determining whether withholding is required under §§ 1.1471–2 and 1.1472–1. A chapter 4 reportable amount does, however, include an amount paid to a participating FFI or registered deemed-compliant FFI to the extent allocable to its reporting pool of payees that are U.S. persons as described in paragraph (d)(4)(i)(B) of this section.

(iii) *Coordination with chapter 3.* A payment that is not subject to reporting under this paragraph (d)(2) may be subject to chapter 3 reporting on Form 1042–S to the extent provided on such form and its accompanying instructions or under § 1.1461–1(c)(2). The recipient information and other information required to be reported on Form 1042–S for purposes of chapter 4 shall be in addition to the information required to be provided on Form 1042–S for purposes of chapter 3.

(3) *Required information.* The information required to be furnished under this paragraph (d)(3) shall be based upon the information provided by or on behalf of the recipient of an amount subject to reporting (as corrected and supplemented based on the withholding agent's actual knowledge) or the presumption rules provided under § 1.1471–3(f) for a U.S. withholding agent and under § 1.1471–4(c)(3)(ii) and (c)(4)(i) for a participating FFI. The Form 1042–S must include the following information, if applicable—

(i) The name, address, and EIN or GIIN (as applicable) of the withholding agent (as required on the instructions to the form) and the withholding agent's status for chapter 3 and chapter 4 purposes (as defined in the instructions to the form);

(ii) A description of each category of income or payment made based on the income and payment codes provided on the form (for example, interest, dividends, and gross proceeds) and the aggregate amount in each category expressed in U.S. dollars;

(iii) The rate and amount of withholding applied or, in the case of a payment of U.S. source FDAP income not subject to withholding and reportable under paragraph (d)(2)(i)(A) of this section, the basis for exempting the payment from withholding under chapter 4 based on exemption codes provided on the form);

(iv) The name and address of the recipient and its TIN or GIIN (as applicable) and foreign taxpayer identification number and date of birth (as required on the instructions to the form);

(v) In the case of a payment to a person (including a flow-through entity or U.S. branch) for which the payment is reported as effectively connected with its conduct of a trade or business in the United States or, in the case of a U.S. branch that is treated as a U.S. person, the EIN used by the person or U.S. branch to file its U.S. income tax returns;

(vi) The name, address of any FFI, flow-through entity that is an NFFE, or U.S. branch or territory financial institution that is not treated as a U.S. person when an account holder or owner of such entity (including an unknown recipient or owner) is treated as the recipient of the payment;

(vii) The EIN or GIIN (as applicable), status for chapter 3 and chapter 4 purposes (as required on the instructions to the form) of an entity reported under paragraph (d)(3)(vii) of this section;

(viii) The country of incorporation or organization (based on the country codes provided on the form) of any entity the name of which appears on the form; and

(ix) Such information as the form or instructions may require in addition to, or in lieu of, information required under this paragraph (d)(3).

(4) *Method of reporting*—(i) *Payments by U.S. withholding agent to recipients.* Except as otherwise provided in this paragraph (d)(4) or on the Form 1042–S and its accompanying instructions, a withholding agent that is a U.S. person (including a U.S. branch that is treated as a U.S. person and excluding a foreign branch of a U.S. person that is a QI) and that makes a payment of a chapter 4 reportable amount must file a separate form for each recipient that receives such amount. Except as otherwise provided on Form 1042–S or its instructions, only payments for which the income or payment code, exemption code, withholding rate, and recipient code are the same may be reported on a single form filed with the IRS. See

paragraph (d)(4)(ii) of this section for reporting of payments made to a person that is not a recipient and that is otherwise required to be reported on Form 1042–S.

(A) *Payments to certain entities that are beneficial owners.* If the beneficial owner of a payment made by a U.S. withholding agent is an exempt beneficial owner, an FFI, an NFFE, or a territory entity, it must complete Form 1042–S treating such entity as the recipient of the payment.

(B) [Reserved] For further guidance, see §1.1474–1T(d)(4)(i)(B).

(C) *Amounts paid to a U.S. branch of a participating FFI or registered deemed-compliant FFI.* A U.S. withholding agent making a payment of U.S. source FDAP income to a U.S. branch of a participating FFI or registered deemed-compliant FFI shall complete Form 1042–S as follows—

(*1*) If the U.S. branch is treated as a U.S. person, if the withholding agent treats amounts paid as effectively connected with the conduct of the branch's trade or business in the United States, or if the U.S. branch is the beneficial owner of the payment, the withholding agent must file Form 1042–S reporting the U.S. branch as the recipient;

(*2*) If the U.S. branch of a participating FFI is not treated as a U.S. person and provides the withholding agent with a withholding certificate that transmits information regarding its reporting pools referenced in paragraph (d)(4)(i)(B) of this section or information regarding each recipient that is an account holder or payee of the U.S. branch, the withholding agent must complete a separate Form 1042–S issued to the U.S. branch for each such pool to the extent required on the form and its accompanying instructions or must complete a separate Form 1042–S issued to each recipient whose documentation is associated with the U.S. branch's withholding certificate as described in paragraph (d)(4)(ii)(A) of this section and report the U.S. branch as an entity not treated as a recipient; or

(*3*) If the U.S. branch of a participating FFI is not treated as a U.S. person, to the extent its fails to provide sufficient information regarding its account holders or payees, the withholding agent shall report the recipient of the payment as an unknown recipient to the extent recipient information is not provided and report the U.S. branch as provided in paragraph (d)(4)(ii)(A) of this section for an entity not treated as a recipient.

(D) *Amounts paid to territory financial institutions that are flow-through entities or acting as intermediaries.* A U.S. withholding agent making a withholdable payment to a territory financial institution that is a flow-through entity or that acts as an intermediary must complete Form 1042–S as follows—

(*1*) If the territory financial institution is treated as a U.S. person or is the beneficial owner of the payment, the withholding agent must file Form 1042–S treating the territory financial institution as the recipient;

(*2*) If the territory financial institution is not treated as a U.S. person and provides the withholding agent with a withholding certificate that transmits information regarding each recipient that is an partner, beneficiary, owner, account holder, or payee, the withholding agent must complete a separate Form 1042–S for each recipient whose documentation is associated with the territory financial institution's withholding certificate as described in paragraph (d)(4)(ii)(A) of this section and must report the territory financial institution under that paragraph; or

(*3*) If the territory financial institution is not treated as a U.S. person, to the extent its fails to provide sufficient information regarding its partners, beneficiaries, owners, account holders or payees, the withholding agent shall report the recipient of the payment as an unknown recipient and report the territory financial institution as provided in paragraph (d)(4)(ii)(A) of this section for an entity not treated as a recipient.

(E) [Reserved] For further guidance, see §1.1474–1T(d)(4)(i)(E).

(ii) *Payments made by withholding agents to certain entities that are not recipients*—(A) *Entities that provide information for a withholding agent to perform specific payee reporting.* If a U.S. withholding agent makes a payment of a chapter 4 reportable amount to a flow-through entity that is a passive NFFE,

a nonparticipating FFI receiving a payment on behalf of an exempt beneficial owner, or a participating FFI or deemed-compliant FFI that is an NQI, NWP, or NWT, except as otherwise provided in paragraph (d)(4)(i)(B) of this section, the withholding agent must complete a separate Form 1042–S for each recipient that is a partner, beneficiary, owner, or account holder of such entity to the extent the withholding agent can reliably associate the payment with valid documentation (under the rules of §1.1471–3(c) and (d)) provided by such entity, as applicable, with respect to each such recipient. If a payment is made through tiers of such entities, the withholding agent must nevertheless complete Form 1042–S for the recipient to the extent it can reliably associate the payment with documentation provided with respect to that recipient. A withholding agent that is completing a Form 1042–S for a recipient described in this paragraph (d)(4)(ii)(A) must include on the form the information described in paragraph (d)(3)(vii) of this section for the entity through which the recipient directly receives the payment.

(B) [Reserved] For further guidance, see §1.1474–1T(d)(4)(ii)(B).

(iii) *Reporting by participating FFIs and deemed-compliant FFIs (including QIs, WPs, and WTs)*—(A) [Reserved] For further guidance, see §1.1474–1T(d)(4)(iii) through (d)(4)(iii)(C).

(iv) *Reporting by territory financial institutions.* A territory financial institution that is not treated as a U.S. person will not be required to report on Form 1042–S if another withholding agent has reported the same amount with regard to the same recipient for which such entity would otherwise be required to file a return under this paragraph (d)(4)(iv) and such withholding agent has withheld the entire amount required to be withheld from such payment. A territory financial institution must, however, report payments made to recipients for whom it has failed to provide the appropriate documentation to another withholding agent or to the extent it knows, or has reason to know, that less than the required amount has been withheld. A territory financial institution that is treated as a U.S. person or is otherwise required under this paragraph (d)(4)(iv) to report amounts paid to recipients on Forms 1042–S must report in the same manner as a U.S. withholding agent.

(v) *Nonparticipating FFIs.* A nonparticipating FFI that is a flow-through entity or that acts as an intermediary with respect to a payment may file Forms 1042 and 1042–S only to report and allocate tax withheld to the account holders, partners, owners, or beneficiaries of the nonparticipating FFI.

(vi) *Other withholding agents.* Any person that is a withholding agent that is not described in any of paragraphs (d)(4)(i) through (v) of this section shall file Forms 1042–S in the same manner as a U.S. withholding agent and in accordance with the instructions to the form.

(e) *Magnetic media reporting.* A withholding agent that is not a financial institution and that is required to file 250 or more Form 1042–S information returns for a taxable year must file Form 1042–S returns on magnetic media. See §301.6011–2(b) of this chapter for the requirements of a withholding agent that is not a financial institution with respect to the filing of Forms 1042–S on magnetic media. See §301.1474–1(a) of this chapter for the requirements applicable to a withholding agent that is a financial institution with respect to the filing of Forms 1042–S on magnetic media.

(f) *Indemnification of withholding agent.* A withholding agent is indemnified against the claims and demands of any person for the amount of any tax it deducts and withholds in accordance with the provisions of chapter 4 and the regulations thereunder. A withholding agent that withholds based on a reasonable belief that such withholding is required under chapter 4 and the regulations thereunder is treated for purposes of section 1474 and this paragraph (f) as having withheld tax in accordance with the provisions of chapter 4 and the regulations thereunder. This paragraph (f) does not relieve a withholding agent from tax liability under chapter 3 or chapter 4 or the regulations under those chapters.

(g) *Extensions of time to file Forms 1042 and 1042–S.* The IRS may grant an extension of time to file Form 1042 or 1042–S as described in § 1.1461–1(g).

(h) *Penalties.* For penalties and additions to tax for failure to file returns or file and furnish statements in accordance with this section, see sections 6651, 6662, 6663, 6721, 6722, 6723, 6724(c), 7201, 7203, and the regulations under those sections. For penalties and additions to tax for failure to timely pay the tax required to be withheld under chapter 4, see sections 6656, 6672, 7202, and the regulations under those sections.

(i) *Additional reporting requirements with respect to U.S. owned foreign entities and owner-documented FFIs*—(1) [Reserved] For further guidance, see § 1.1474–1T(i)(1).

(i) [Reserved] For further guidance, see § 1.1474–1T(i)(1)(i).

(ii) [Reserved] For further guidance, see § 1.1474–1T(i)(1)(ii).

(iii) [Reserved] For further guidance, see § 1.1474–1T(i)(1)(iii) through (i)(1)(iii)(E).

(2) [Reserved] For further guidance, see § 1.1474–1T(i)(2).

(i) Name of the NFFE that is owned by a substantial U.S. owner;

(ii) The name, address, and TIN of each substantial U.S. owner of such NFFE;

(iii) [Reserved] For further guidance, see § 1.1474–1T(i)(2)(iii).

(iv) Any other information as required by the form and its accompanying instructions.

(3) *Cross reference to reporting by participating FFIs.* For the reporting requirements of a participating FFI with respect to an account holder that is a U.S. owned foreign entity or that it treats as an owner-documented FFI, see § 1.1471–4(d).

(j) *Effective/applicability date.* This section generally applies on January 28, 2013. For other dates of applicability see §§ 1.1474–1(d)(4)(iii)(C) and 1.1474–1(i).

[T.D. 9610, 78 FR 5985, Jan. 28, 2013; 78 FR 55208, Sept. 10, 2013, as amended by T.D. 9657, 79 FR 12862, Mar. 6, 2014]

§ 1.1474–1T Liability for withheld tax and withholding agent reporting (temporary).

(a) through (c) [Reserved] For further guidance, see § 1.1474–1(a) through (c)(3).

(d) [Reserved] For further guidance, see § 1.1474–1(d).

(1) [Reserved] For further guidance, see § 1.1474–1(d)(1).

(i) *In general.* Except as otherwise provided in paragraph (d)(4) of this section or in the instructions to Form 1042–S, every withholding agent must file an information return on Form 1042–S, ''Foreign Person's U.S. Source Income Subject to Withholding,'' (or such other form as the IRS may prescribe) to report to the IRS chapter 4 reportable amounts as described in paragraph (d)(2)(i) of this section that were paid to a recipient during the preceding calendar year. Except as otherwise provided in paragraphs (d)(4)(ii)(B) (certain unknown recipients) and (d)(4)(i)(B) and (d)(4)(iii)(A) of this section (describing payees includable in reporting pools of a participating FFI or registered deemed-compliant FFI), a separate Form 1042–S must be filed with the IRS for each recipient of an amount subject to reporting under paragraph (d)(2)(i) of this section and for each separate type of payment made to a single recipient in accordance with paragraph (d)(4)(i) of this section. The Form 1042–S shall be prepared in such manner as the form and its accompanying instructions prescribe. One copy of the Form 1042–S shall be filed with the IRS on or before March 15 of the calendar year following the year in which the amount subject to reporting was paid, with a transmittal form as provided in the instructions to the form. Withholding certificates, certifications, documentary evidence, or other statements or documentation provided to a withholding agent are not required to be attached to the form. A copy of the Form 1042–S must be furnished to the recipient for whom the form is prepared (or any other person, as required under this paragraph or the instructions to the form) and to any intermediary or flow-through entity described in paragraph (d)(3)(vii) of this section on or before March 15 of the calendar year following

the year in which the amount subject to reporting was paid. The withholding agent must retain a copy of each Form 1042–S for the period of limitations on assessment and collection applicable to the tax reportable on the Form 1042 to which the Form 1042–S relates (determined as set forth in paragraph (c)(1) of this section). See paragraph (d)(4)(iii) of this section for the additional reporting requirements of participating FFIs and deemed-compliant FFIs.

(ii) [Reserved] For further guidance, see §1.1474–1(d)(1)(ii).

(A) [Reserved] For further guidance, see §1.1474–1(d)(1)(ii)(A).

(*1*) [Reserved] For further guidance, see §1.1474–1(d)(1)(ii)(A)(*1*).

(*i*) through (*vii*) [Reserved] For further guidance, see §1.1474–1(d)(1)(ii)(A)(*1*)(*i*) through (*vii*).

(*viii*) An excepted NFFE and passive NFFE that also is not a flow-through entity and that is not acting as an agent or intermediary with respect to the payment;

(*ix*) A foreign person that is a partner or beneficiary in a flow-through entity that is a NFFE (looking through a partner or beneficiary that is a foreign intermediary or flow-through entity);

(*x*) through (*xi*) [Reserved] For further guidance, see §1.1474–1(d)(1)(ii)(A)(*1*)(*x*) through (*xi*).

(*2*) through (*3*) [Reserved] For further guidance, see §1.1474–1(d)(1)(ii)(A)(*2*) through (*3*).

(B) [Reserved] For further guidance, see §1.1474–1(d)(1)(ii)(B).

(*1*) [Reserved] For further guidance, see §1.1474–1(d)(1)(ii)(B)(*1*).

(*i*) A certified deemed-compliant FFI that is an NQI, NWP, or NWT and that fails to provide its withholding agent with sufficient information to allocate the payment to its account holders and payees;

(*ii*) through (*v*) [Reserved] For further guidance, see §1.1474–1(d)(1)(ii)(B)(*1*)(*ii*) through (*v*).

(*vi*) An account holder or payee of a nonparticipating FFI except to the extent described in paragraph (d)(1)(ii)(A)(*1*)(*x*) of this section for an exempt beneficial owner;

(*vii*) Except as provided in paragraph (d)(1)(ii)(A)(*1*) of this section, an entity that is disregarded under §301.7701–2(c)(2) as an entity separate from its owner;

(*viii*) [Reserved] For further guidance, see §1.1474–1(d)(1)(ii)(B)(*1*)(*viii*).

(*ix*) A passive NFFE or an excepted NFFE that is a flow-through entity or acts as an intermediary;

(*2*) through (*3*) [Reserved] For further guidance, see §1.1474–1(d)(1)(ii)(B)(*2*) through (*3*).

(2) [Reserved] For further guidance, see §1.1474–1(d)(2).

(i) *In general.* Subject to paragraph (d)(2)(iii) of this section, the term *chapter 4 reportable amount* means each of the following amounts reportable on a Form 1042–S for purposes of chapter 4—

(A) An amount of a withholdable payment that is subject to withholding under chapter 4 paid after June 30, 2014;

(B) An amount of a withholdable payment of U.S. source FDAP income that is also reportable on Form 1042–S under §1.1461–1(c)(2)(i); or

(C) A foreign passthru payment subject to withholding under chapter 4.

(ii) through (iii) [Reserved] For further guidance, see §1.1474–1(d)(2)(ii) through (iii).

(3) [Reserved] For further guidance, see §1.1474–1(d)(3) through (d)(3)(x).

(4) [Reserved] For further guidance, see §1.1474–1(d)(4).

(i) [Reserved] For further guidance, see §1.1474–1(d)(4)(i).

(A) [Reserved] For further guidance, see §1.1474–1(d)(4)(i)(A).

(B) *Payments to participating FFIs, deemed-compliant FFIs, and certain QIs.* Except as otherwise provided in this paragraph (d)(4)(i)(B), a U.S. withholding agent that makes a payment of a chapter 4 reportable amount to a participating FFI or deemed-compliant FFI that is an NQI, NWP, or NWT must complete a Form 1042–S treating such FFI as the recipient. With respect to a payment of U.S. source FDAP income made to a participating FFI or registered deemed-compliant FFI that is an NQI, NWP, or NWT or QI that elects to be withheld upon under section 1471(b)(3) and from whom the withholding agent receives an FFI withholding statement allocating the payment (or portion of the payment) to a chapter 4 withholding rate pool, a U.S. withholding agent must complete a

separate Form 1042–S issued to the participating FFI, registered deemed-compliant FFI, or QI (as applicable) as the recipient with respect to each such pool identified on an FFI withholding statement, described in §1.1471–3(c)(3)(iii)(B)(*2*). If, however, a participating FFI, deemed-compliant FFI, or QI (as applicable) has made an election under §1.1471–4(b)(3)(iii), for the portion of the payment that the FFI allocates to each recalcitrant account holder that is subject to backup withholding under section 3406, the withholding agent must report on Form 1099 the amount of the payment and tax withheld in accordance with the form's requirements and accompanying instructions. See §1.1471–2(a)(2)(i) for the requirement of a withholding agent to withhold on payments of U.S. source FDAP income made to a participating FFI or registered deemed-compliant FFI that is an NQI, NWP, or NWT. See also §1.1471–2(a)(2)(iii) in the case of payments made to a QI. See §1.1461–1(c)(4)(A) for the extent to which reporting is required under that section for U.S. source FDAP income that is reportable on Form 1042–S under chapter 3 and not subject to withholding under chapter 4, in which case the U.S. withholding agent must report in the manner described under §1.1461–1(c)(4)(ii) and paragraph (d)(4)(ii)(A) of this section. See paragraph (d)(4)(ii)(A) of this section for reporting rules applicable if participating FFIs or deemed-compliant FFIs provide specific payee information for reporting to the recipient of the payment for Form 1042–S reporting purposes. See paragraph (d)(4)(iii) of this section for the residual reporting responsibilities of an NQI, NWP, or NWT that is an FFI.

(C) through (D) [Reserved] For further guidance, see §1.1474–1(d)(4)(i)(C) through (d)(4)(i)(D)(*3*).

(E) *Amounts paid to NFFEs.* A U.S. withholding agent that makes payments of chapter 4 reportable amounts to an excepted or passive NFFE shall complete Forms 1042–S treating the NFFE as the recipient, except when the NFFE is a flow-through entity or acting as an intermediary and the partner or beneficiary is treated as the payee. In cases in which the chapter 4 reportable amount is also an amount of U.S. source FDAP income reportable on Form 1042–S (described in §1.1441–2(a)), see also §1.1461–1(c)(4)(A) for the extent to which reporting is required with respect to the partners, beneficiaries, or owners of such entities.

(ii) [Reserved] For further guidance, see §1.1474–1(d)(4)(ii).

(A) [Reserved] For further guidance, see §1.1474–1(d)(4)(ii)(A).

(B) *Nonparticipating FFI that is a flow-through entity or intermediary.* If a withholding agent makes a payment of a chapter 4 reportable amount to a nonparticipating FFI that it is required to treat as an intermediary with regard to a payment or as a flow-through entity under rules described in §1.1471–3(c)(3)(iii), and except as otherwise provided in paragraph (d)(1)(ii)(A)(*1*)(*x*) of this section (relating to an exempt beneficial owner), the withholding agent must report the recipient of the payment as an unknown recipient and report the nonparticipating FFI as provided in paragraph (d)(4)(ii)(A) of this section for an entity not treated as a recipient.

(C) *Disregarded entities.* If a U.S. withholding agent makes a payment to a disregarded entity and receives a valid withholding certificate or other documentary evidence from the person that is the single owner of such disregarded entity, the withholding agent must file a Form 1042–S treating the single owner as the recipient in accordance with the instructions to the Form 1042–S.

(iii) *Reporting by participating FFIs and deemed-compliant FFIs (including QIs, WPs, and WTs)*—(A) *In general.* Except as otherwise provided in paragraph (d)(4)(iii)(B) (relating to NQIs, NWPs, NWTs, and FFIs electing under section 1471(b)(3)) and §1.1471–4(d)(2)(ii)(F) (relating to transitional payee-specific reporting for payments to nonparticipating FFIs), a participating FFI or deemed-compliant FFI (including a QI, WP, WT, or U.S. branch of a participating FFI that is not treated as a U.S. person) that makes a payment that is a chapter 4 reportable amount to a recalcitrant account holder or nonparticipating FFI must complete a Form 1042–S to report such payments. A participating FFI or

registered deemed-compliant FFI (including a QI, WP, WT, or U.S. branch of a participating FFI that is not treated as a U.S. person) may report in pools consisting of its recalcitrant account holders and payees that are nonparticipating FFIs. With respect to recalcitrant account holders, the FFI may report in pools consisting of recalcitrant account holders within a particular status described in §1.1471–4(d)(6) and within a particular income code. Except as otherwise provided in §1.1471–4(d)(2)(ii)(F), with respect to payees that are nonparticipating FFIs, the FFI may report in pools consisting of one or more nonparticipating FFIs that fall within a particular income code and within a particular status code described in the instructions to Form 1042–S. Alternatively, a participating FFI or registered deemed-compliant FFI (including a QI, WP, WT, or U.S. branch of a participating FFI that is not treated as a U.S. person) may (and a certified deemed-compliant FFI is required to) perform payee-specific reporting to report a chapter 4 reportable amount paid to a recalcitrant account holder or a nonparticipating FFI when withholding was applied (or should have applied) to the payment.

(B) *Special reporting requirements of participating FFIs, deemed-compliant FFIs, and FFIs that make an election under section 1471(b)(3).* Except as otherwise provided in §1.1471–4(d)(2)(ii)(F), a participating FFI or deemed-compliant FFI that is an NQI, NWP, NWT (including a U.S. branch of a participating FFI that is not treated as a U.S. person), or an FFI that has made an election under section 1471(b)(3) and has provided sufficient information to its withholding agent to withhold and report the payment is not required to report the payment on Form 1042–S as described in paragraph (d)(4)(iii)(A) of this section if the payment is made to a nonparticipating FFI or recalcitrant account holder and its withholding agent has withheld the correct amount of tax on such payment and correctly reported the payment on a Form 1042–S. Such FFI is required to report a payment, however, when the FFI knows, or has reason to know, that less than the required amount has been withheld by the withholding agent on the payment or the withholding agent has not correctly reported the payment on Form 1042–S. In such case, the FFI must report on Form 1042–S to the extent required under paragraph (d)(4)(iii)(A) of this section. See, however, §1.1471–4(d)(6) for the requirement to report certain aggregate information regarding accounts held by recalcitrant account holders on Form 8966, ''FATCA Report,'' regardless of whether withholdable payments are made to such accounts.

(C) *Reporting by a U.S. branch treated as a U.S. person.* A U.S. branch treated as a U.S. person (as defined in §1.1471–1(b)(135)) must report amounts paid to recipients on Forms 1042–S in the same manner as a U.S. withholding agent under paragraph (d)(4)(i) of this section.

(iv) through (vi) [Reserved] For further guidance, see §1.1474–1(d)(4)(iv) through (vi).

(e) through (h) [Reserved] For further guidance, see §1.1474–1(e) through (h).

(i) [Reserved] For further guidance, see §1.1474–1(i).

(1) *Reporting by certain withholding agents with respect to owner-documented FFIs.*

(i) Beginning on July 1, 2014, if a withholding agent (other than an FFI reporting accounts held by owner-documented FFIs under §1.1471–4(d)) makes a withholdable payment to an entity account holder or payee of an obligation and the withholding agent treats the entity as an owner-documented FFI under §1.1471–3(d)(6), the withholding agent is required to report for July 1 through December 31, 2014, with respect to each specified U.S. person identified in §1.1471–3(d)(6)(iv)(A)(*1*) and (*2*) the information described in paragraph (i)(1)(iii) of this section.

(ii) Beginning in calendar year 2015, if a withholding agent (other than an FFI reporting accounts held by owner-documented FFIs under §1.1471–4(d)) makes during a calendar year a withholdable payment to an entity account holder or payee of an obligation and the withholding agent treats the entity as an owner-documented FFI under §1.1471–3(d)(6), the withholding agent is required to report for such calendar year with respect to each specified U.S. person identified in §1.1471–3(d)(6)(iv)(A)(*1*)

and (*2*) the information described in paragraph (i)(1)(iii) of this section.

(iii) The information that a withholding agent (other than an FFI reporting accounts held by owner-documented FFIs under §1.1471–4(d)) is required to report under paragraphs (i)(1)(i) and (i)(1)(ii) of this section must be made on Form 8966 (or such other form as the IRS may prescribe) and filed on or before March 31 of the calendar year following the year in which the withholdable payment was made. The report must contain the following information—

(A) The name of the owner-documented FFI;

(B) The name, address, and TIN of each specified U.S. person identified in §1.1471–3(d)(6)(iv)(A)(*1*) and (*2*);

(C) For the period from July 1 through December 31, 2014, the total of all withholdable payments made to the owner-documented FFI and with respect to payments made after the 2014 calendar year the total of all withholdable payments made to the owner-documented FFI during the calendar year;

(D) The account balance or value of the account held by the owner-documented FFI; and

(E) Any other information required on Form 8966 and its accompanying instructions provided for purposes of such reporting.

(2) *Reporting by certain withholding agents with respect to U.S. owned foreign entities that are NFFEs.* Beginning on July 1, 2014, in addition to the reporting on Form 1042–S required under paragraph (d)(4)(i)(E) of this section, a withholding agent (other than an FFI reporting accounts held by NFFEs under §1.1471–4(d)) that makes a withholdable payment to, and receives information about any substantial U.S. owners of, a NFFE that is not an excepted NFFE as defined in §1.1472–1(c) shall file a report with the IRS for the period from July 1 through December 31, 2014, and in each subsequent calendar year in which a withholdable payment is made with respect to any substantial U.S. owners of such NFFE. Such report must be made on Form 8966 (or such other form as the IRS may prescribe) and filed on or before March 31 of the calendar year following the year in which the withholdable payment was made. The IRS shall grant an automatic 90-day extension of time in which to file Form 8966. Form 8809, ''Request for Extension of Time to File Information Returns,'' (or such other form as the IRS may prescribe) must be used to request such extension of time and must be filed no later than the due date of Form 8966. Under certain hardship conditions, the IRS may grant an additional 90-day extension. A request for extension due to hardship must contain a statement of the reasons for requesting the extension and such other information as the form or instructions may require. The report must contain the following information—

(i) through (ii) [Reserved] For further guidance, see §1.1474–1(i)(2)(i) through (ii).

(iii) For the period from July 1, 2014 through December 31, 2014, the total of all withholdable payments made to the NFFE and, with respect to payments made after the 2014 calendar year, the total of all withholdable payments made to the NFFE during the calendar year; and

(iv) [Reserved] For further guidance, see §1.1474–1(i)(2)(iv).

(3) [Reserved] For further guidance, see §1.1474–1(i)(3).

(j) [Reserved] For further guidance, see §1.1474–1(j).

(k) *Expiration date.* The applicability of this section expires on February 28, 2017.

[T.D. 9657, 79 FR 12862, Mar. 6, 2014; 79 FR 37180, July 1, 2014]

§1.1474–2 Adjustments for overwithholding or underwithholding of tax.

(a) *Adjustments of overwithheld tax*—(1) *In general.* Except as otherwise provided by this section, a withholding agent that has overwithheld tax under chapter 4 and made a deposit of the tax as provided in §1.6302–2(a) may adjust the amount of overwithheld tax either pursuant to the reimbursement procedure described in paragraph (a)(3) of this section or pursuant to the set-off procedure described in paragraph (a)(4) of this section. Adjustments under this paragraph (a) may only be made within the time prescribed under paragraph (a)(3) or (a)(4) of this section. After

such time, a refund of the amount of overwithheld tax can only be claimed pursuant to the procedures described in § 1.1474–5 and chapter 65 of the Code and the regulations thereunder.

(2) *Overwithholding*. For purposes of this section, the term *overwithholding* means an amount actually withheld (determined before application of the adjustment procedures under this section and regardless of whether such overwithholding was in error or appeared correct at the time it occurred) from an item of income or other payment pursuant to chapter 4 that is in excess of the greater of—

(i) The amount required to be withheld with respect to such item of income or other payment under chapter 4; and

(ii) The actual tax liability of the beneficial owner that is attributable to the income or payment from which the amount was withheld.

(3) *Reimbursement of tax*—(i) *General rule*. Under the reimbursement procedure, the withholding agent may repay the beneficial owner or payee for an amount of overwithheld tax. In such case, the withholding agent may reimburse itself by reducing, by the amount actually repaid to the beneficial owner or payee, the amount of any deposit of tax made by the withholding agent under § 1.6302–2(a)(1)(iii) for any subsequent payment period occurring before the end of the calendar year following the calendar year of overwithholding. A withholding agent must obtain valid documentation as described under § 1.1471–3(c)(6) with respect to the beneficial owner or payee supporting a reduced rate of withholding before reducing the amount of any deposit of tax under this paragraph (a)(3)(i). Any such reduction that occurs for a payment period in the calendar year following the calendar year of overwithholding shall be allowed only if—

(A) The repayment of the beneficial owner or payee occurs before the earlier of the due date (without regard to extensions) for filing the Form 1042–S for the calendar year of overwithholding or the date that the Form 1042–S is actually filed with the IRS;

(B) The withholding agent states on a timely filed (not including extensions) Form 1042–S the amount of tax withheld and the amount of any actual repayment; and

(C) The withholding agent states on a timely filed (not including extensions) Form 1042 for the calendar year of overwithholding that the filing of the Form 1042 constitutes a claim for credit in accordance with § 1.6414–1.

(ii) *Record maintenance*. If the beneficial owner or payee is repaid an amount of overwithheld tax under the provisions of this paragraph (a)(3), the withholding agent shall keep as part of its records a receipt showing the date and amount of repayment, and the withholding agent must provide a copy of such receipt to the beneficial owner or payee. For this purpose, a canceled check or an entry in a statement is sufficient, provided that the check or statement contains a specific notation that it is a refund of tax overwithheld.

(4) *Set-offs*. Under the set-off procedure, the withholding agent may repay the beneficial owner or payee for an amount of overwithheld tax by applying the amount overwithheld against any amount which otherwise would be required under chapter 3 or 4 to be withheld from the amount paid by the withholding agent to such person before the earlier of the due date (without regard to extensions) for filing the Form 1042–S for the calendar year of overwithholding or the date that the Form 1042–S is actually filed with the IRS. For purposes of making a return on Form 1042 or 1042–S (or an amended form) for the calendar year of overwithholding and for purposes of making a deposit of the amount withheld, the reduced amount shall be considered the amount required to be withheld from such payment under chapter 3 or 4, respectively.

(5) *Examples*. The principles of this paragraph (a) are illustrated by the following examples:

Example 1. (i) Fund A is a unit investment trust that is an FFI and a resident of Country X. Fund A also qualifies for the benefits of the income tax treaty between the United States and Country X. On December 1, 2016, domestic corporation C pays a dividend of $100 to Fund A, at which time C withholds $30 of tax pursuant to § 1.1471–2(a) and remits the balance of $70 to Fund A, because it does not hold valid documentation that Fund A is a participating FFI or deemed-compliant FFI. On February 10, 2017, prior to the time

that C is obligated to file its Form 1042, Fund A furnishes a valid Form W–8BEN described in §§1.1441–1(e)(2)(i) and 1.1471–3(c)(3)(ii) upon which C may rely to treat Fund A as the beneficial owner of the income and as a participating FFI so that C may reduce the rate of withholding to 15% under the provisions of the United States-Country X income tax treaty with respect to the payment. C repays the excess tax withheld of $15 to Fund A.

(ii) During the 2016 calendar year, C makes no other payments upon which tax is required to be withheld under chapter 3 or 4; accordingly, its Form 1042 for such year, filed on March 15, 2017, shows total tax withheld of $30, an adjusted total tax withheld of $15, and tax deposited of $30 for such year. Pursuant to §1.6414–1, C claims a credit for the overpayment of $15 shown on the Form 1042 for 2016. Accordingly, C is permitted to reduce by $15 any deposit required by §1.6302–2 to be made of tax withheld during the 2017 calendar year with respect to taxes due under chapter 3 or 4. The Form 1042–S required to be filed by C with respect to the dividend of $100 paid to Fund A in 2016 is required to show tax withheld of $30 and tax repaid of $15 to Fund A.

Example 2. (i) In November 2016, Bank A, a foreign bank organized in Country X that is an NQI, receives on behalf of one of its account holders, Z, an individual, a $100 dividend payment from C, a domestic corporation. At the time of payment, C withholds $30 pursuant to §1.1471–2(a) and remits the balance of $70 to Bank A, because it does not hold valid documentation that it may rely on to treat Bank A as a participating FFI or deemed-compliant FFI. In December 2016, prior to the time that C files its Forms 1042 and 1042–S, Bank A furnishes a valid Form W–8IMY and FFI withholding statement described in §1.1471–3(c)(3)(iii) that establishes Bank A's status as a participating FFI that is an NQI, as well as a valid Form W–8BEN that has been completed by Z as described in §1.1471–3(c)(3)(ii) and §1.1441–1(e)(2)(i) upon which C may rely to treat the payment as made to Z, a nonresident alien individual who is a resident of Country X eligible for a reduced rate of withholding of 15% under the income tax treaty between the United States and Country X. Although C has already deposited the $30 that was withheld, as required by §1.6302–2(a)(1)(iv), C remits the amount of $15 to Bank A for the benefit of Z.

(ii) During the 2016 calendar year, C makes no other payments upon which tax is required to be withheld under chapter 3 or 4; accordingly, its return on Form 1042 for such year, which is filed on March 15, 2017, shows total tax withheld of $30, an adjusted total tax withheld of $15, and tax deposited of $30. Pursuant to §1.6414–1(b), C claims a credit for the overpayment of $15 shown on the Form 1042 for 2014. Accordingly, it is permitted to reduce by $15 any deposit required by §1.6302–2 to be made of tax withheld during the 2017 calendar year. The Form 1042–S required to be filed by C for 2016 with respect to the dividend of $100 beneficially owned by Z is required to show tax withheld of $30 and tax repaid of $15 to Z.

(b) *Withholding of additional tax when underwithholding occurs.* A withholding agent that has underwithheld under chapter 4 may apply the procedures described in §1.1461–2(b) (by substituting the term ''chapter 4'' for ''chapter 3'') to satisfy its withholding obligations under chapter 4 with respect to a payee or beneficial owner.

(c) *Effective/applicability date.* This section applies January 28, 2013.

[T.D. 9610, 78 FR 5991, Jan. 28, 2013]

§ 1.1474–3 Withheld tax as credit to beneficial owner of income.

(a) *Creditable tax.* The entire amount of the income, if any, attributable to a payment from which tax is required to be withheld under chapter 4 (including income deemed paid by a withholding agent under §1.1473–1(a)(2)(v)) shall be included in gross income in a return required to be made by the beneficial owner of the income, without deduction for the amount required to be or actually withheld, but the amount of tax actually withheld shall be allowed as a credit against the total income tax computed in the beneficial owner's return.

(b) *Amounts paid to persons that are not the beneficial owners.* Amounts actually deducted and withheld under chapter 4 on payments made to a fiduciary, agent, partnership, trust, or intermediary are deemed to have been paid by the beneficial owner of the item of income or other payment subject to withholding under chapter 4, except when the fiduciary, agent, partnership, trust, or intermediary pays the tax from its own funds and does not in turn withhold with respect to the payment made to such person. Thus, for example, if a beneficiary of a trust is subject to the taxes imposed by section 1, 2, 3, or 11 upon any amount of distributable net income or other taxable distribution received from a foreign trust, the part of any amount withheld at source under chapter 4 that is properly allocable to the income so taxed to such

beneficiary shall be credited against the amount of the income tax computed upon the beneficiary's return, and any excess shall be refunded to the beneficiary in accordance with § 1.1474–5 and chapter 65 of the Code.

(c) *Effective/applicability date.* This section applies January 28, 2013.

[T.D. 9610, 78 FR 5992, Jan. 28, 2013]

§ 1.1474–4 Tax paid only once.

(a) *Tax paid.* If the tax required to be withheld under chapter 4 on a payment is paid by the payee, beneficial owner, or the withholding agent, it shall not be re-collected from any other, regardless of the original liability therefor. However, this section does not relieve a person that was required to, but did not, withhold tax from liability for interest or any penalties or additions to tax otherwise applicable.

(b) *Effective/applicability date.* This section applies January 28, 2013.

[T.D. 9610, 78 FR 5992, Jan. 28, 2013]

§ 1.1474–5 Refunds or credits.

(a) *Refund and credit*—(1) *In general.* Except to the extent otherwise provided in this section, a refund or credit of tax which has actually been withheld at the source at the time of payment under chapter 4 shall be made to the beneficial owner of the payment to which the amount of withheld tax is attributable if the beneficial owner or payee meets the requirements of this paragraph (a) and any other requirements that may be required under chapter 65. To the extent that the amount withheld under chapter 4 is not actually withheld at source, but is later paid by the withholding agent to the IRS, the refund or credit under chapter 65 of the Code shall be made to the withholding agent to the extent the withholding agent provides documentation with respect to the beneficial owner or payee described in paragraphs (a)(2) and (3) of this section sufficient for the beneficial owner or payee to have obtained a refund of the tax and sufficient for the withholding agent to have applied a reduced rate or exemption from withholding under chapter 4. The preceding sentence shall not, however, apply to a nonparticipating FFI that is acting as a withholding agent with respect to one or more of its account holders. In such a case, only the account holders of the nonparticipating FFI will be entitled to a credit or refund of an amount withheld under chapter 4, to the extent otherwise allowable under this section. Additionally, there are collective refund procedures for a participating FFI or reporting Model 1 FFI to claim a refund or credit on behalf of certain direct account holders that are beneficial owners of the payment under § 1.1471–4(h) (in lieu of such account holders claiming refund or credit under this paragraph (a)(1)).

(2) *Limitation to refund and credit for a nonparticipating FFI.* Notwithstanding paragraph (a)(1) of this section, a nonparticipating FFI (determined as of the time of payment) that is the beneficial owner of an item of income or other payment that is subject to withholding under chapter 4 shall not be entitled to any credit or refund pursuant to section 1474(b)(2) and this section unless it is entitled to a reduced rate of tax with respect to the income or other payment by reason of any treaty obligation of the United States. If the nonparticipating FFI is entitled to a reduced rate of tax with respect to an item of income or other payment by reason of any treaty obligation of the United States, the amount of any credit or refund with respect to such tax shall not exceed the amount of credit or refund attributable to such reduction in rate on the item of income or other payment, and no interest otherwise allowable under section 6611 shall be allowed or paid with respect to such credit or refund.

(3) *Requirement to provide additional documentation for certain beneficial owners*—(i) *In general.* Except as provided in paragraph (a)(3)(ii) of this section, no refund or credit shall be allowed under paragraph (a)(1) of this section to the beneficial owner of the income or other payment to which the amount of such withheld tax was attributable if such beneficial owner is an NFFE, unless the NFFE attaches to its income tax return the information described in paragraph (a)(3)(iii) of this section.

(ii) *Claim of reduced withholding under an income tax treaty.* Paragraph (a)(3)(i)

of this section does not apply to the extent that the beneficial owner is entitled to a reduced rate of tax with respect to the income or other payment by reason of any treaty obligation of the United States.

(iii) *Additional documentation to be furnished to the IRS for certain NFFEs.* The information described in this paragraph (a)(3)(iii) is—

(A) A certification that the beneficial owner does not have any substantial U.S. owners;

(B) The form described in §1.1474–1(i)(2) relating to each substantial U.S. owner of such entity; or

(C) Other appropriate documentation to establish withholding was not required under chapter 4.

(b) *Tax repaid to payee.* For purposes of this section and §1.6414–1, any amount of tax withheld under chapter 4, which, pursuant to §1.1474–2(a)(1), is repaid by the withholding agent to the beneficial owner of the income or payment to which the withheld amount is attributable shall be considered as tax which, within the meaning of sections 1474 and 6414, was not actually withheld by the withholding agent.

(c) *Effective/applicability date.* This section applies January 28, 2013.

[T.D. 9610, 78 FR 5992, Jan. 28, 2013]

§1.1474–6 Coordination of chapter 4 with other withholding provisions.

(a) *In general.* This section coordinates the withholding requirements of a withholding agent when a withholdable payment or foreign passthru payment is subject to withholding under both chapter 4 and another Code provision. See §1.1473–1(a) for the definition of withholdable payment and see §1.1471–5(h)(2) for the definition of foreign passthru payment.

(b) *Coordination of withholding for amounts subject to withholding under sections 1441, 1442, and 1443*—(1) [Reserved] For further guidance, see §1.1474–6T(b)(1).

(2) *When withholding is applied.* For purposes of paragraph (b)(1) of this section, withholding is applied by a withholding agent under section 1441 (or section 1442 or 1443) or chapter 4 (as applicable) when the withholding agent has withheld on the payment and has designated the withholding as having been made under section 1441 (or section 1442 or 1443) or chapter 4 to the extent required in the reporting described in §1.1474–1(c) and (d). For purposes of allowing an offset of withholding and allowing a credit to a withholding agent against its liability for such tax as described in paragraph (b)(1) of this section, withholding is treated as applied for purposes of paragraph (a) of this section only when the withholding agent has actually withheld on a payment and has not made any adjustment for overwithheld tax applicable to the amount withheld that would otherwise be permitted with respect to the payment.

(3) *Special rule for certain substitute dividend payments.* In the case of a dividend equivalent under section 871(m) paid pursuant to a securities lending transaction described in section 1058 (or a substantially similar transaction), or pursuant to a sale-repurchase transaction, a withholding agent may offset its obligation to withhold under chapter 4 for amounts withheld by another withholding agent under chapters 3 and 4 with respect to the same underlying security in such a transaction, but only to the extent that there is sufficient evidence as required under chapter 3 that tax was actually withheld on a prior dividend equivalent paid to the withholding agent or a prior withholding agent with respect to the same underlying security in such transaction.

(c) *Coordination with amounts subject to withholding under section 1445*—(1) *In general.* An amount subject to withholding under section 1445 is not subject to withholding under chapter 4 as described in paragraphs (c)(2)(i) and (ii) of this section.

(2) *Determining the amount of the distribution from certain domestic corporations subject to section 1445 or chapter 4 withholding*—(i) *Distribution from qualified investment entity.* In the case of a passthru payment (including a withholdable payment) subject to withholding under chapter 4 that is a distribution with respect to the stock of a qualified investment entity as described in section 897(h)(4)(A), withholding under chapter 4 does not apply when withholding under section 1445 applies to such amounts. With respect

to the portion of such distribution that is not subject to withholding under section 1445 but is subject to withholding under section 1441 (or section 1442 or 1443) and chapter 4, the coordination rule described in paragraph (b)(1) of this section shall apply.

(ii) *Distribution from a United States real property holding corporation.* A distribution (or portion of a distribution) from a United States real property holding corporation (or from a corporation that was a United States real property holding corporation at any time during the five-year period ending on the date of the distribution) with respect to its stock that is a United States real property interest under section 897(c) is subject to withholding under chapter 4 and is also subject to the withholding provisions of section 1441 (or section 1442 or 1443) and section 1445. In such case, to the extent that the United States real property holding corporation chooses to withhold on a distribution only under section 1441 (or section 1442 or 1443) pursuant to §1.1441–3(c)(4)(i)(A), the coordination rule described in paragraph (b)(1) of this section shall apply to such distribution. Alternatively, to the extent that the United States real property holding corporation chooses to withhold under both section 1441 (or section 1442 or 1443) and section 1445 pursuant to §1.1441–3(c)(4)(i)(B), the coordination rule described in paragraph (b)(1) of this section shall apply to the portion of such distribution described in §1.1441–3(c)(4)(i)(B)(1), and withholding under section 1445 shall apply to the amount of such distribution described in §1.1441–3(c)(4)(i)(B)(2). A withholding agent other than a United States real property holding corporation may rely, absent actual knowledge or reason to know otherwise, on the representations of the United States real property holding corporation making the distribution regarding the portion of the distribution that is estimated to be a dividend under §1.1441–3(c)(2)(ii)(A), and in the case of a failure by the withholding agent to withhold under chapter 4 due to this reliance, the required amount shall be imputed to the United States real property holding corporation.

(d) *Coordination with section 1446*—(1) *In general.* Except as otherwise provided in paragraph (d)(2) of this section, a withholdable payment or a foreign passthru payment subject to withholding under section 1446 shall not be subject to withholding under chapter 4. See §1.1473–1(a)(4)(ii) for the exclusion from withholdable payment and the requirements for such exclusion for any item of income that is taken into account under section 871(b)(1) or 882(a)(1) for the taxable year.

(2) *Determining the amount of distribution subject to section 1446.* [Reserved]

(e) *Example. Chapter 4 withholding satisfies chapter 3 withholding obligation.* WA, a U.S. withholding agent, makes a payment consisting of a dividend from sources within the United States to NPFFI. NPFFI is a nonparticipating FFI that is a resident of Country X, a country that has an income tax treaty in force with the United States that would allow WA to reduce the rate of withholding for section 1442 purposes on a payment of U.S. source dividends paid to NPFFI to 15%. Because the payment is a withholdable payment and NPFFI is a nonparticipating FFI, WA withholds on the payment at the rate of 30% under chapter 4. WA does not make any adjustment for overwithholding that is otherwise permitted with respect to this payment. Although the payment is also an amount subject to withholding under section 1442, WA is not required to withhold any tax on this payment under section 1442. WA may credit its withholding applied under chapter 4 against the amount of tax otherwise required to be withheld on this payment under section 1442. See §1.1474–5(a)(2) for the credit and refund procedures for nonparticipating FFIs that are entitled to a reduced rate of tax with respect to an amount subject to withholding under chapter 4 by reason of any treaty obligation of the United States.

(f) [Reserved] For further guidance, see §1.1474–6T(f).

(g) *Effective/applicability date.* This section applies January 28, 2013.

[T.D. 9610, 78 FR 5993, Jan. 28, 2013, as amended by T.D. 9657, 79 FR 12865, Mar. 6, 2014]

§ 1.1474–6T Coordination of chapter 4 with other withholding provisions (temporary).

(a) [Reserved] For further guidance, see § 1.1474–6(a).

(b) [Reserved] For further guidance, see § 1.1474–6(b).

(1) *In general.* In the case of a withholdable payment that is both subject to withholding under chapter 4 and is an amount subject to withholding under § 1.1441–2(a), a withholding agent may credit the withholding applied under chapter 4 against its liability for any tax due under sections 1441, 1442, or 1443. See § 1.1474–1(c) and (d) for the income tax return and information return reporting requirements that apply in the case of a payment that is a withholdable payment subject to withholding under chapter 4 that is also an amount subject to withholding under § 1.1441–2(a).

(2) through (3) [Reserved] For further guidance, see § 1.1474–6(b)(2) through (3).

(c) through (e) [Reserved] For further guidance, see § 1.1474–6(c) through (e).

(f) *Coordination with section 3406.* A participating FFI that makes a withholdable payment that is also a reportable payment (as defined in the relevant sections of chapter 61) to a recalcitrant account holder that is a U.S. non-exempt recipient is not required to withhold under section 3406 if it withholds on the payment at a 30-percent rate in accordance with its withholding obligations under chapter 4. See, however, § 1.1471–4(b)(3)(iii) for the election to withhold on recalcitrant account holders that are non-exempt U.S. recipients under section 3406 instead of withholding under chapter 4.

(g) [Reserved] For further guidance, see § 1.1474–6(g).

(h) *Expiration date.* The applicability of this section expires on February 28, 2017.

[T.D. 9657, 79 FR 12865, Mar. 6, 2014]

§ 1.1474–7 Confidentiality of information.

(a) *Confidentiality of information.* Pursuant to section 1474(c)(1), the provisions of § 31.3406(f)–1(a) of this chapter shall apply (substituting ''sections 1471 through 1474'' for ''section 3406'') to information obtained or used in connection with the requirements of chapter 4.

(b) *Exception for disclosure of participating FFIs.* Pursuant to section 1474(c)(2), the identity of a participating FFI or deemed-compliant FFI shall not be treated as return information for purposes of section 6103.

(c) *Effective/applicability date.* This section applies January 28, 2013.

[T.D. 9610, 78 FR 5994, Jan. 28, 2013]

MITIGATION OF EFFECT OF RENEGOTIATION OF GOVERNMENT CONTRACTS

§ 1.1481–1 [Reserved]

TAX ON TRANSFERS TO AVOID INCOME TAX

§ 1.1491–1 Imposition of tax.

Section 1491 imposes an excise tax upon transfers of stock or securities by a citizen or resident of the United States, or by a domestic corporation or partnership, or by a trust which is not a foreign trust, to a foreign corporation as paid-in surplus or as a contribution to capital, or to a foreign trust, or to a foreign partnership. The tax is in an amount equal to 27½ percent of the excess of (a) the value of the stock or securities so transferred over (b) its adjusted basis, as provided in section 1011, for determining gain in the hands of the transferor.

[T.D. 6500, 25 FR 12082, Nov. 26, 1960]

§ 1.1492–1 Nontaxable transfers.

(a) The tax imposed by section 1491 does not apply:

(1) If the transferee is an organization (other than an organization described in section 401(a) exempt from income tax under the provisions of sections 501 to 504, inclusive; or

(2) If before the transfer it has been established to the satisfaction of the Commissioner that the transfer is not in pursuance of a plan having as one of its principal purposes the avoidance of Federal income taxes.

(b) Whether a transfer of stock or securities is in pursuance of a plan having as one of its principal purposes the avoidance of Federal income taxes is a question to be determined from the

facts and circumstances of each particular case. In any such case where a transferor desires to establish that the transfer is not in pursuance of such a plan, a statement of the facts relating to the plan under which the transfer is to be made or was made, together with a copy of the plan if in writing, shall be forwarded to the Commissioner of Internal Revenue, Washington, DC 20225, for a ruling. This statement shall contain, or be verified by, a written declaration that it is made under the penalties of perjury. A letter notifying the transferor of the Commissioner's determination will be mailed to the transferor.

[T.D. 6500, 25 FR 12082, Nov. 26, 1960]

§ 1.1493–1 Definition of foreign trust.

For taxable years beginning before January 1, 1967, a trust is to be considered a ''foreign trust'' within the meaning of chapter 5 of the Code, if, assuming a subsequent sale by the trustee, outside the United States and for cash, of the property transferred to the trust, the profit, if any, from such sale (being income from sources without the United States under the provisions of part I (section 861 and following), subchapter N, chapter 1 of the Code), would not be included in the gross income of the trust under subtitle A of the Code. For taxable years beginning after December 31, 1966, the term ''foreign trust,'' as used in chapter 5 of the Code, shall have the meaning prescribed by section 7701(a)(31).

[T.D. 7332, 39 FR 44230, Dec. 23, 1974]

§ 1.1494–1 Returns; payment and collection of tax.

(a) *Returns and payment.* Every person making a transfer described in section 1491 shall make a return to the district director on the day on which the transfer is made and, unless the transfer is nontaxable under section 1492, pay the tax due on such transfer. This return, which shall contain, or be verified by, a written declaration that it is made under the penalties of perjury, shall be made on Form 926 and shall be filed with the district director to whom the transferor's return of income is required to be made. The return shall set forth in detail the following information:

(1) Name and address of transferor, and place of organization or creation, if a corporation, partnership, or trust.

(2) Name and address of transferee, place of organization or creation, and whether the transferee is a foreign corporation, a foreign trust, or a foreign partnership. If the transferee is a foreign trust or a foreign partnership, the name and address of the fiduciary and each beneficiary, in the case of a trust, or of each partner, in the case of a partnership, must be shown.

(3) Description and amount of stock or securities transferred, the date of transfer, and a complete statement showing all the facts relating to the transfer, accompanied by a copy of the plan under which the transfer was made.

(4) The fair market value of the stock or securities transferred as of the date of transfer, and the adjusted basis provided in section 1011 for determining gain in the hands of the transferor.

(5) Whether the transfer was made in pursuance of a plan submitted to and approved by the Commissioner as not having as one of its principal purposes the avoidance of Federal income taxes. If the plan has been so approved, a copy of the Commissioner's letter approving the plan shall accompany the return.

(6) Such other information as may be required by the return form.

(b) *Certificate.* (1) If the transferee of the stock or securities, the transfer of which is reported in the return, is a foreign organization meeting the tests of exemption from income tax provided in part I (section 501 and following), subchapter F, chapter 1 of the Code, and the transferor on that account claims that no liability for tax is imposed by section 1491, such transferor must file with Form 926 a certificate establishing the exemption of the transferee under such part I. This certificate, which shall contain, or be verified by, a written declaration that it is made under the penalties of perjury, shall contain complete information showing the character of the transferee, the purpose for which it was organized, its actual activities, the source of its income and the disposition of such income, whether or not

any of its income is credited to surplus or may inure to the benefit of any private shareholder or individual, and in general all facts relating to its operations which affect its right to exemption. To such certificate shall be attached a copy of the charter or articles of incorporation, the by-laws of the organization, and the latest financial statement showing the assets, liabilities, receipts, and disbursements of the organization.

(2) If the transferee is a foreign organization which has been held to be exempt from income tax under such part I (or corresponding provisions of prior law), a copy of the Commissioner's letter so holding shall be filed with Form 926 in lieu of the above certificate and attachments.

(c) *Assessment and collection*. The determination, assessment, and collection of the tax and the examination of returns and claims filed pursuant to chapter 5 of the Code will be made under such procedure as may be prescribed from time to time by the Commissioner.

[T.D. 6500, 25 FR 12082, Nov. 26, 1960]

§ 1.1494–2 Effective date.

Chapter 5 (section 1491 and following) of the Internal Revenue Code of 1954 and the regulations prescribed thereunder apply with respect to transfers occurring after December 31, 1954. (See section 7851(a)(1)(B).) Chapter 7 (section 1250 and following) of the Internal Revenue Code of 1939 and the regulations applicable thereto apply with respect to transfers occurring prior to January 1, 1955.

[T.D. 6500, 25 FR 12083, Nov. 26, 1960]

CONSOLIDATED RETURNS

RETURNS AND PAYMENT OF TAX

CONSOLIDATED RETURN REGULATIONS

§ 1.1502–0 Effective dates.

(a) The regulations under section 1502 are applicable to taxable years beginning after December 31, 1965, except as otherwise provided therein.

(b) The provisions of §§ 1.1502–0A through 1.1502–3A, 1.1502–10A through 1.1502–19A, and 1.1502–30A through 1.1502–51A (as contained in the 26 CFR part 1 edition revised April 1, 1996) are applicable to taxable years beginning before January 1, 1966.

[T.D. 8677, 61 FR 33325, June 27, 1996]

§ 1.1502–1 Definitions.

(a) *Group*. The term *group* means an affiliated group of corporations as defined in section 1504. See § 1.1502–75(d) as to when a group remains in existence. Except as the context otherwise requires, references to a group are references to a consolidated group (as defined in paragraph (h) of this section).

(b) *Member*. The term *member* means a corporation (including the common parent) that is included in the group, or as the context may require, a corporation that is included in a subgroup.

(c) *Subsidiary*. The term *subsidiary* means a corporation other than the common parent which is a member of such group.

(d) *Consolidated return year*. The term *consolidated return year* means a taxable year for which a consolidated return is filed or required to be filed by such group.

(e) *Separate return year*. The term *separate return year* means a taxable year of a corporation for which it files a separate return or for which it joins in the filing of a consolidated return by another group.

(f) *Separate return limitation year*—(1) *In general*. Except as provided in paragraphs (f)(2) and (3) of this section, the term *separate return limitation year* (or *SRLY*) means any separate return year of a member or of a predecessor of a member.

(2) *Exceptions*. The term *separate return limitation year* (or *SRLY*) does not include:

(i) A separate return year of the corporation which is the common parent for the consolidated return year to which the tax attribute is to be carried (except as provided in § 1.1502–75(d)(2)(ii) and subparagraph (3) of this paragraph),

(ii) A separate return year of any corporation which was a member of the group for each day of such year, or

(iii) A separate return year of a predecessor of any member if such predecessor was a member of the group for each day of such year,

Provided that an election under section 1562(a) (relating to the privilege to elect multiple surtax exemptions) was never effective (or is no longer effective as a result of a termination of such election) for such year. An election under section 1562(a) which is effective for a taxable year beginning in 1963 and ending in 1964 shall be disregarded.

(3) *Reverse acquisitions.* In the event of an acquisition to which §1.1502–75(d)(3) applies, all taxable years of the first corporation and of each of its subsidiaries ending on or before the date of the acquisition shall be treated as separate return limitation years, and the separate return years (if any) of the second corporation and each of its subsidiaries shall not be treated as separate return limitation years (unless they were so treated immediately before the acquisition). For example, if corporation P merges into corporation T, and the persons who were stockholders of P immediately before the merger, as a result of owning the stock of P, own more than 50 percent of the fair market value of the outstanding stock of T, then a loss incurred before the merger by T (even though it is the common parent), or by a subsidiary of T, is treated as having been incurred in a separate return limitation year. Conversely, a loss incurred before the merger by P, or by a subsidiary of P in a separate return year during all of which such subsidiary was a member of the group of which P was the common parent and for which section 1562 was not effective, is treated as having been incurred in a year which is not a separate return limitation year.

(4) *Predecessor and successors.* The term *predecessor* means a transferor or distributor of assets to a member (the successor) in a transaction—

(i) To which section 381(a) applies; or

(ii) That occurs on or after January 1, 1997, in which the successor's basis for the assets is determined, directly or indirectly, in whole or in part, by reference to the basis of the assets of the transferor or distributor, but in the case of a transaction that occurs before June 25, 1999, only if the amount by which basis differs from value, in the aggregate, is material. For a transaction that occurs before June 25, 1999, only one member may be considered a predecessor to or a successor of one other member.

(g) *Consolidated return change of ownership*—(1) *In general.* A consolidated return change of ownership occurs during any taxable year (referred to in this subparagraph as the ''year of change'') of the corporation which is the common parent for the taxable year to which the tax attribute is to be carried, if, at the end of the year of change:

(i) Any one or more of the persons described in section 382(a)(2) own a percentage of the fair market value of the outstanding stock of such corporation which is more than 50 percentage points greater than such person or persons owned at:

(*a*) The beginning of such taxable year, or

(*b*) The beginning of the preceding taxable year, and

(ii) The increase in percentage points at the end of such year is attributable to:

(*a*) A purchase (within the meaning of section 382(a)(4)) by such person or persons of such stock, the stock of another corporation owning stock in such corporation, or an interest in a partnership or trust owning stock in such corporation, or

(*b*) A decrease in the amount of such stock outstanding or the amount of stock outstanding of another corporation owning stock in such corporation, except a decrease resulting from a redemption to pay death taxes to which section 303 applies.

For purposes of subdivision (i) (*a*) and (*b*) of this subparagraph, the beginning of the taxable years specified therein shall be the beginning of such taxable years or October 1, 1965, whichever occurs later.

(2) *Operating rules.* For purposes of this paragraph:

(i) The term *stock* means all shares except nonvoting stock which is limited and preferred as to dividends, and

(ii) Section 318 (relating to constructive ownership of stock) shall apply in determining the ownership of stock, except that section 318(a) (2)(C) and (3)(C) shall be applied without regard to the 50-percent limitation contained therein.

(3) *Old members*. The term *old members* of a group means:

(i) Those corporations which were members of such group immediately preceding the first day of the taxable year in which the consolidated return change of ownership occurs, or

(ii) If the group was not in existence prior to the taxable year in which the consolidated return change of ownership occurs, the corporation which is the common parent for the taxable year to which the tax attribute is to be carried.

(4) *Reverse acquisitions*. If there has been a consolidated return change of ownership of a corporation under subparagraph (1) of this paragraph and the stock or assets of such corporation are subsequently acquired by another corporation in an acquisition to which §1.1502–75(d)(3) applies so that the group of which the former corporation is the common parent is treated as continuing in existence, then the ''old members'', as defined in subparagraph (3) of this paragraph, of such group immediately before the acquisition shall continue to be treated as ''old members'' immediately after the acquisition. For example, assume that corporations P and S comprise group PS, and PS undergoes a consolidated return change of ownership. Subsequently, the stock of P, the common parent, is acquired by corporation T, the common parent of group TU, in an acquisition to which section 368(a)(1)(B) and §1.1502–75(d)(3) apply. The PS group is treated as continuing in existence with T as the common parent. P and S continue to be treated as old members, as defined in subparagraph (3) of this paragraph.

(h) *Consolidated group*. The term ''consolidated group'' means a group filing (or required to file) consolidated returns for the tax year.

(i) [Reserved]

(j) *Affiliated*. Corporations are affiliated if they are members of a group with each other.

[T.D. 6894, 31 FR 11794, Sept. 8, 1966, as amended by T.D. 7246, 38 FR 758, Jan. 4, 1973; T.D. 8294, 55 FR 9434, Mar. 14, 1990; T.D. 8319, 55 FR 49038, Nov. 26, 1990; T.D. 8560, 59 FR 41675, Aug. 15, 1994; T.D. 8677, 61 FR 33325, June 27, 1996; T.D. 8823, 64 FR 36101, July 2, 1999]

CONSOLIDATED TAX LIABILITY

§1.1502–2 Computation of tax liability.

The tax liability of a group for a consolidated return year shall be determined by adding together:

(a) The tax imposed by section 11 on the consolidated taxable income for such year (see §1.1502–11 for the computation of consolidated taxable income);

(b) The tax imposed by section 541 on the consolidated undistributed personal holding company income;

(c) If paragraph (b) of this section does not apply, the aggregate of the taxes imposed by section 541 on the separate undistributed personal holding company income of the members which are personal holding companies;

(d) If paragraph (b) of this section does not apply, the tax imposed by section 531 on the consolidated accumulated taxable income (see §1.1502–43);

(e) The tax imposed by section 594(a) in lieu of the taxes imposed by section 11 or 1201 on the taxable income of a life insurance department of the common parent of a group which is a mutual savings bank;

(f) The tax imposed by section 802(a) on consolidated life insurance company taxable income;

(g) The tax imposed by section 831(a) on the consolidated insurance company taxable income of the members which are subject to such tax;

(h) The tax imposed by section 1201, instead of the taxes computed under paragraphs (a) and (g) of this section, computed by reference to the net capital gain of the group (see §1.1502–22) (or, for consolidated return years to which §1.1502–22 does not apply, computed by reference to the excess of the consolidated net long-term capital gain over the consolidated net short-term capital loss (see §1.1502–41A for the determination of the consolidated net long-term capital gain and the consolidated net short-term capital loss));

(i) [Reserved]

(j) The tax imposed by section 1333 on war loss recoveries; and

by allowing as a credit against such taxes the investment credit under section 38 (see §1.1502–3), and the foreign tax credit under section 33 (see §1.1502–4). For purposes of this section, the

surtax exemption of the group for a consolidated return year is $25,000, or if a lesser amount is allowed under section 1561, such lesser amount. See § 1.1561–2(a)(2). For increase in tax due to the application of section 47, see § 1.1502–3(f). For amount of tax surcharge, see section 51 and § 1.1502–7.

[T.D. 6894, 31 FR 11794, Sept. 8, 1966, as amended by T.D. 7093, 36 FR 4871, Mar. 13, 1971; T.D. 7937, 49 FR 3462, Jan. 27, 1984; T.D. 8677, 61 FR 33326, June 27, 1996; T.D. 8823, 64 FR 36099, July 2, 1999]

§ 1.1502–3 Consolidated tax credits.

(a) *Determination of amount of consolidated credit*—(1) *In general*. The credit allowed by section 38 for a consolidated return year of a group shall be equal to the consolidated credit earned. The consolidated credit earned is equal to the aggregate of the credit earned (as determined under subparagraph (2) of this paragraph) by all members of the group for the consolidated return year.

(2) *Determination of credit earned*. The credit earned of a member is an amount equal to 7 percent of such member's qualified investment (determined under section 46(c)). For purposes of computing a member's qualified investment, the basis of property shall not include any gain or loss realized with respect to such property by another member in an intercompany transaction (as defined in § 1.1502–13(b)), whether or not such gain or loss is deferred. Thus, if section 38 property acquired in an intercompany transaction has a basis of $100 to the purchasing member, and if the selling member has a $20 gain with respect to such property, the basis of such property for purposes of computing the purchaser's qualified investment is only $80. Such $80 basis shall also be used for purposes of applying section 47 to such property. See paragraph (f) of this section.

(3) *Consolidated limitation based on amount of tax*. (i) Notwithstanding the amount of the consolidated credit earned for the taxable year, the consolidated credit allowed by section 38 to the group for the consolidated return year is limited to:

(*a*) So much of the consolidated liability for tax as does not exceed $25,000, plus

(*b*) For taxable years ending on or before March 9, 1967, 25 percent of the consolidated liability for tax in excess of $25,000, or

(*c*) For taxable years ending after March 9, 1967, 50 percent of the consolidated liability for tax in excess of $25,000.

The $25,000 amount referred to in the preceding sentence shall be reduced by any part of such $25,000 amount apportioned under § 1.46–1 to component members of the controlled group (as defined in section 46(a)(5)) which do not join in the filing of the consolidated return. For further rules for computing the limitation based on amount of tax with respect to the suspension period (as defined in section 48(j)), see section 46(a)(2). The amount determined under this subparagraph is referred to in this section as the ''consolidated limitation based on amount of tax.''

(ii) If an organization to which section 593 applies or a cooperative organization described in section 1381(a) joins in the filing of the consolidated return, the $25,000 amount referred to in subdivision (i) of this subparagraph (reduced as provided in such subdivision) shall be apportioned equally among the members of the group filing the consolidated return. The amount so apportioned equally to any such organization shall then be decreased in accordance with the provisions of section 46(d). Finally, the sum of all such equal portions (as decreased under section 46(d)) of each member of the group shall be substituted for the $25,000 amount referred to in subdivision (i) of this subparagraph.

(4) *Consolidated liability for tax*. For purposes of subparagraph (3) of this paragraph, the consolidated liability for tax shall be the income tax imposed for the taxable year upon the group by chapter 1 of the Code, reduced by the consolidated foreign tax credit allowable under § 1.1502–4. The tax imposed by section 56 (relating to minimum tax for tax preferences), section 531 (relating to accumulated earnings tax), section 541 (relating to personal holding company tax), and any additional tax imposed by section 1351(d)(1) (relating to recoveries of foreign expropriation

losses), shall not be considered tax imposed by chapter 1 of the Code. In addition, any increase in tax resulting from the application of section 47 (relating to certain dispositions, etc., of section 38 property) shall not be treated as tax imposed by chapter 1 for purposes of computing the consolidated liability for tax.

(b) *Carryback and carryover of unused credits*—(1) *Allowance of unused credit as consolidated carryback or carryover.* A group shall be allowed to add to the amount allowable as a credit under paragraph (a)(1) of this section for any consolidated return year an amount equal to the aggregate of the consolidated investment credit carryovers and carrybacks to such year. The consolidated investment credit carryovers and carrybacks to the taxable year shall consist of any consolidated unused credits of the group, plus any unused credits of members of the group arising in separate return years of such members, which may be carried over or back to the taxable year under the principles of section 46(b). However, such consolidated carryovers and carrybacks shall not include any consolidated unused credits apportioned to a corporation for a separate return year pursuant to paragraph (c) of § 1.1502–79 and shall be subject to the limitations contained in paragraphs (c) and (e) of this section. A consolidated unused credit for any consolidated return year is the excess of the consolidated credit earned over the consolidated limitation based on amount of tax for such year.

(2) *Absorption rules.* For purposes of determining the amount, if any, of an unused credit (whether consolidated or separate) which can be carried to a taxable year (consolidated or separate), the amount of such unused credit which is absorbed in a prior consolidated return year under section 46(b) shall be determined by:

(i) Applying all unused credits which can be carried to such prior year in the order of the taxable years in which such unused credits arose, beginning with the taxable year which ends earliest, and

(ii) Applying all such unused credits which can be carried to such prior year from taxable years ending on the same date on a pro rata basis.

(3) *Example.* The provisions of paragraphs (a) and (b) of this section may be illustrated by the following example:

Example. (i) Corporation P is incorporated on January 1, 1966. On that same day P incorporates corporation S, a wholly owned subsidiary. P and S file consolidated returns for calendar years 1966 and 1967. P's and S's credit earned, the consolidated credit earned, and the consolidated limitation based on amount of tax for 1966 and 1967 are as follows:

	Credit earned	Consolidated credit earned	Consolidated limitation based on amount of tax
1966:			
P	$60,000		
S	$30,000	$90,000	$100,000
1967:			
P	$40,000		
S	$25,000	$65,000	$50,000

(ii) P's and S's credit earned for 1966 are aggregated, and the group's consolidated credit earned, $90,000, is allowable in full to the group as a credit under section 38 for 1966 since such amount is less than the consolidated limitation based on amount of tax for 1966, $100,000.

(iii) Since the consolidated limitation based on amount of tax for 1967 is $50,000, only $50,000 of the $65,000 consolidated credit earned for such year is allowable to the group under section 38 as a credit for 1967. The consolidated unused credit for 1967 of $15,000 ($65,000 less $50,000) is a consolidated investment credit carryback and carryover to the years prescribed in section 46(b). In this case the consolidated unused credit is a consolidated investment credit carryback to 1966 (since P and S were not in existence in 1964 and 1965) and a consolidated investment credit carryover to 1968 and subsequent years. The portion of the consolidated unused credit for 1967 which is allowable as a credit for 1966 is $10,000. This amount shall be added to the amount allowable as a credit to the group for 1966. The balance of the consolidated unused credit for 1967 to be carried to 1968 is $5,000. These amounts are computed as follows:

Consolidated carryback to 1966	.....	.....	$15,000
1966 consolidated limitation based on tax	.....	$100,000	.....
Less: Consolidated credit earned for 1966	$90,000		
Consolidated unused credits attributable to years preceding 1967	0	$90,000	

Limit on amount of 1967 consolidated unused credit which may be added as a credit for 1966	.....	.....	$10,000
Balance of 1967 consolidated unused credit to be carried to 1968	.....	.....	$5,000

(c) *Limitation on investment credit carryovers and carrybacks from separate return limitation years applicable for consolidated return years for which the due date of the return is on or before March 13, 1998*—(1) *General rule.* In the case of an unused credit of a member of the group arising in a separate return limitation year (as defined in § 1.1502–1(f)) of such member (and in a separate return limitation year of any predecessor of such member), the amount which may be included under paragraph (b) of this section (computed without regard to the limitation contained in paragraph (e) of this section) shall not exceed the amount determined under paragraph (c)(2) of this section.

(2) *Computation of limitation.* The amount referred to in paragraph (c)(1) of this section with respect to a member of the group is the excess, if any, of—

(i) The limitation based on amount of tax of the group, minus such limitation recomputed by excluding the items of income, deduction, and foreign tax credit of such member; over

(ii) The sum of the investment credit earned by such member for such consolidated return year, and the unused credits attributable to such member which may be carried to such consolidated return year arising in unused credit years ending prior to the particular separate return limitation year.

(3) *Special effective date.* This paragraph (c) applies to consolidated return years for which the due date of the income tax return (without extensions) is on or before March 13, 1998. See paragraph (d) of this section for the rule that limits the group's use of a section 38 credit carryover or carryback from a SRLY for a consolidated return year for which the due date of the income tax return (without extensions) is after March 13, 1998. See also paragraph (d)(4) of this section for an optional effective date rule (generally making the rules of this paragraph (c) inapplicable to a consolidated return year beginning after December 31, 1996, if the due date of the income tax return (without extensions) for such year is on or before March 13, 1998).

(4) *Examples.* The provisions of this paragraph (c) may be illustrated by the following examples:

Example 1. (i) Assume the same facts as in the example contained in paragraph (b)(3) of this section, except that all the stock of corporation T, also a calendar year taxpayer, is acquired by P on January 1, 1968, and that P, S, and T file a consolidated return for 1968. In 1966, T had an unused credit of $10,000 which has not been absorbed and is available as an investment credit carryover to 1968. Such carryover is from a separate return limitation year. P's and S's credit earned for 1968 is $10,000 each, and T's credit earned is $8,000; the consolidated credit earned is therefore $28,000. The group's consolidated limitation based on amount of tax for 1968 is $50,000. Such limitation recomputed by excluding the items of income, deduction, and foreign tax credit of T is $30,000. Thus, the amount determined under paragraph (c)(2)(i) of this section is $20,000 ($50,000 minus $30,000). Accordingly, the limitation on the carryover of T's unused credit is $12,000, the excess of $20,000 over $8,000 (the sum of T's credit earned for the taxable year and any carryovers from prior unused credit years (none in this case)). Therefore T's $10,000 unused credit from 1966 may be carried over to the consolidated return year without limitation.

(ii) The group's consolidated credit earned for 1968, $28,000, is allowable in full as a credit under section 38 since such amount is less than the consolidated limitation based on amount of tax, $50,000.

(iii) The group's consolidated investment credit carryover to 1968 is $15,000, consisting of the consolidated unused credits of the group ($5,000) plus T's separate return year unused credit ($10,000). The entire $15,000 consolidated carryover shall be added to the amount allowable to the group as a credit under section 38 for 1968, since such amount is less than $22,000 (the excess of the consolidated limitation based on tax, $50,000, over the sum of the consolidated credit earned for 1968, $28,000, and unused credits arising in prior unused credit years, zero).

Example 2. Assume the same facts as in *Example 1*, except that the amount determined under paragraph (c)(2)(i) of this section is $12,000. Therefore, the limitation on the carryover of T's unused credit is $4,000. Accordingly, the consolidated investment credit carryover is only $9,000 since the amount of T's separate return year unused credit which

may be added to the group's $ 5,000 consolidated unused credit is $4,000. These amounts are computed as follows:

T's carryover to 1968	.....	.....	$10,000
Consolidated limitation based on amount of tax minus recomputed limitation	.....	$12,000	.....
Less: T's credit earned for 1968	$8,000	.....	.....
Unused credits attributable to T arising in unused credit years preceding 1966	0	$8,000	.....
Limit on amount of 1966 unused credit of T which may be added to consolidated investment credit carryover	.....	.....	$4,000
Balance of 1966 unused credit of T to be carried to 1969 (subject to the limitation contained in paragraph (c) of this section)	.....	.....	$6,000

(d) *Limitation on tax credit carryovers and carrybacks from separate return limitation years applicable for consolidated return years for which the due date of the return is after March 13, 1998*—(1) *General rule*. The aggregate of a member's unused section 38 credits arising in SRLYs that are included in the consolidated section 38 credits for all consolidated return years of the group may not exceed—

(i) The aggregate for all consolidated return years of the member's contributions to the consolidated section 38(c) limitation for each consolidated return year; reduced by

(ii) The aggregate of the member's section 38 credits arising and absorbed in all consolidated return years (whether or not absorbed by the member).

(2) *Computational rules*—(i) *Member's contribution to the consolidated section 38(c) limitation*. If the consolidated section 38(c) limitation for a consolidated return year is determined by reference to the consolidated tentative minimum tax (see section 38(c)(1)(A)), then a member's contribution to the consolidated section 38(c) limitation for such year equals the member's share of the consolidated net income tax minus the member's share of the consolidated tentative minimum tax. If the consolidated section 38(c) limitation for a consolidated return year is determined by reference to the consolidated net regular tax liability (see section 38(c)(1)(B)), then a member's contribution to the consolidated section 38(c) limitation for such year equals the member's share of the consolidated net income tax minus 25 percent of the quantity which is equal to so much of the member's share of the consolidated net regular tax liability less its portion of the $25,000 amount specified in section 38(c)(1)(B). The group computes the member's shares by applying to the respective consolidated amounts the principles of section 1552 and the percentage method under §1.1502–33(d)(3), assuming a 100% allocation of any decreased tax liability. The group must make proper adjustments so that taxes and credits not taken into account in computing the limitation under section 38(c) are not taken into account in computing the member's share of the consolidated net income tax, etc. (See, for example, the taxes described in section 26(b) that are disregarded in computing regular tax liability.) Also, the group may apportion all or a part of the $25,000 amount (or lesser amount if reduced by section 38(c)(3)) for any year to one or more members.

(ii) *Years included in computation*. For purposes of computing the limitation under this paragraph (d), the consolidated return years of the group include only those years, including the year to which a credit is carried, that the member has been continuously included in the group's consolidated return, but exclude—

(A) For carryovers, any years ending after the year to which the credit is carried; and

(B) For carrybacks, any years ending after the year in which the credit arose.

(iii) *Subgroups and successors*. The SRLY subgroup principles under §1.1502–21(c)(2) apply for purposes of this paragraph (d). The predecessor and successor principles under §1.1502–21(f) also apply for purposes of this paragraph (d).

(iv) *Overlap with section 383*. The principles under §1.1502–21(g) apply for purposes of this paragraph (d). For example, an overlap of paragraph (d) of this section and the application of section 383 with respect to a credit carryover

occurs if a corporation becomes a member of a consolidated group (the SRLY event) within six months of the change date of an ownership change giving rise to a section 383 credit limitation with respect to that carryover (the section 383 event), with the result that the limitation of this paragraph (d) does not apply. See §§1.1502–21(g)(2)(ii)(A) and 1.383–1; see also §1.1502–21(g)(4) (subgroup rules).

(3) *Effective date*—(i) *In general.* This paragraph (d) generally applies to consolidated return years for which the due date of the income tax return (without extensions) is after March 13, 1998.

(A) *Contribution years.* Except as provided in paragraph (d)(4)(ii) of this section, a group does not take into account a consolidated taxable year for which the due date of the income tax return (without extensions) is on or before March 13, 1998, in determining a member's (or subgroup's) contributions to the consolidated section 38(c) limitation under this paragraph (d).

(B) *Special subgroup rule.* In the event that the principles of §1.1502–21(g)(1) do not apply to a particular credit carryover in the current group, then solely for purposes of applying paragraph (d) of this section to determine the limitation with respect to that carryover and with respect to which the SRLY register (the aggregate of the member's or subgroup's contribution to consolidated section 38(c) limitation reduced by the aggregate of the member's or subgroup's section 38 credits arising and absorbed in all consolidated return years) began in a taxable year for which the due date of the return is on or before May 25, 2000, the principles of §1.1502–21(c)(2) shall be applied without regard to the phrase ''or for a carryover that was subject to the overlap rule described in paragraph (g) of this section or §1.1502–15(g) with respect to another group (the former group).''

(ii) *Overlap rule.* Paragraph (d)(2)(iv) of this section (relating to overlap with section 383) applies to taxable years for which the due date (without extensions) of the consolidated return is after May 25, 2000. For purposes of paragraph (d)(2)(iv) of this section, only an ownership change to which section 383, as amended by the Tax Reform Act of 1986 (100 Stat. 2085), applies and which results in a section 383 credit limitation shall constitute a section 383 event.

(4) *Optional effective date of January 1, 1997.* (i) For consolidated taxable years beginning on or after January 1, 1997, for which the due date of the income tax return (without extensions) is on or before March 13, 1998, in lieu of paragraphs (c) and (e)(3) of this section (relating to the general business credit), §1.1502–4(f)(3) and (g)(3) (relating to the foreign tax credit), the next to last sentence of §1.1502–9A(a)(2), §1.1502–9A(b)(1)(v) (relating to overall foreign losses), and §1.1502–55(h)(4)(iii) (relating to the alternative minimum tax credit), a consolidated group may apply the corresponding provisions as they appear in 1998–1 C.B. 655 through 661 (see §601.601(d)(2) of this chapter) (treating references in such corresponding provisions to §§1.1502–9(b)(1)(ii), (iii), and (iv) as references to §§1.1502–9A(b)(1)(ii), (iii), and (iv)). Also, in the case of a consolidated return change of ownership that occurs on or after January 1, 1997, in a taxable year for which the due date of the income tax return (without extensions) is on or before March 13, 1998, a consolidated group may choose not to apply paragraph (e) of this section and §1.1502–4(g) to taxable years ending after December 31, 1996. A consolidated group making the choices described in the two preceding sentences generally must apply all such corresponding provisions (including not applying paragraph (e) of this section and §1.1502–4(g)) for all relevant years. However, a consolidated group making the election provided in §1.1502–9A(b)(1)(vi) (electing not to apply §1.1502–9A(b)(1)(v) to years beginning before January 1, 1998) may nevertheless choose to apply all such corresponding provisions referred to in this paragraph (d)(4)(i) other than the provision corresponding to §1.1502–9A(b)(1)(v) for all relevant years.

(ii) If a consolidated group chooses to apply the corresponding provisions referred to in paragraph (d)(4)(i) of this section, the consolidated group shall not take into account a consolidated taxable year beginning before January 1, 1997, in determining a member's (or

subgroup's) contributions to the consolidated section 38(c) limitation under this paragraph (d).

(5) *Example*. The following example illustrates the provisions of this paragraph (d):

Example. (i) Individual A owns all of the stock of P and T. P is the common parent of the P group. P acquires all the stock of T at the beginning of Year 2. T carries over an unused section 38 general business credit from Year 1 of $100,000. The table in paragraph (i) of this Example shows the group's net consolidated income tax, consolidated tentative minimum tax, and consolidated net regular tax liabilities, and T's share of such taxes computed under the principles of section 1552 and the percentage method under §1.1502–33(d)(3), assuming a 100% allocation of any decreased tax liability, for Year 2. (The effects of the lower section 11 brackets are ignored, there are no other tax credits affecting a group amount or member's share, and $1,000s are omitted.)

Year 2	Group	P's share of col. 1	T's share of col. 1
1. consolidated taxable income	$2,000	$1,200	$800
2. consolidated net regular tax	$700	$420	$280
3. consolidated alternative minimum taxable income	$4,000	$3,200	$800
4. consolidated tentative minimum tax	$800	$640	$160
5. consolidated net income tax	$800	$520	$280
6. greater of line 4 or 25% of (line 2 minus $25,000) for the group	$800		
7. consolidated §38(c) limitation (line 5 minus line 6)	$0		

(ii) T's Year 1 is a SRLY with respect to the P group. See §1.1502–1(f)(2)(ii). T did not undergo an ownership change giving rise to a section 383 credit limitation within 6 months of joining the P group. Thus, T's $100,000 general business credit arising in Year 1 is subject to a SRLY limitation in the P group. The amount of T's unused section 38 credits from Year 1 that are included in the consolidated section 38 credits for Year 2 may not exceed T's contribution to the consolidated section 38(c) limitation. For Year 2, the group determines the consolidated section 38(c) limitation by reference to consolidated tentative minimum tax for Year 2. Therefore, T's contribution to the consolidated section 38(c) limitation for Year 2 equals its share of consolidated net income tax minus its share of consolidated tentative minimum tax. T's contribution is $280,000 minus $160,000, or $120,000. However, because the

group has a consolidated section 38 limitation of zero, it may not include any of T's unused section 38 credits in the consolidated section 38 credits for Year 2.

(iii) The following table shows similar information for the group for Year 3:

Year 3	Group	P's share of col. 1	T's share of col. 1
1. consolidated taxable income	$1,200	$1,500	$(300)
2. consolidated net regular tax	$420	$525	$(105)
3. consolidated alternative minimum taxable income	$1,500	$1,700	$(200)
4. consolidated tentative minimum tax	$300	$340	$(40)
5. consolidated net income tax	$420	$525	$(105)
6. greater of line 4 or 25% of (line 2 minus $25,000) for the group	$300		
7. consolidated §38(c) limitation (line 5 minus line 6)	$120		

(iv) The amount of T's unused section 38 credits from Year 1 that are included in the consolidated section 38 credits for Year 3 may not exceed T's aggregate contribution to the consolidated section 38(c) limitation

for Years 2 and 3. For Year 3, the group determines the consolidated section 38(c) limitation by reference to the consolidated tentative minimum tax for Year 3. Therefore, T's contribution to the consolidated section 38(c) limitation for Year 3 equals its share of consolidated net income tax minus its share of consolidated tentative minimum tax. Applying the principles of section 1552 and §1.1502–33(d) (taking into account, for example, that T's positive earnings and profits adjustment under §1.1502–33(d) reflects its losses actually absorbed by the group), T's contribution is $(105,000) minus $(40,000), or $(65,000). T's aggregate contribution to the consolidated section 38(c) limitation for Years 2 and 3 is $120,000 + $(65,000), or $55,000. The group may include $55,000 of T's Year 1 unused section 38 credits in its consolidated section 38 tax credit in Year 3.

(e) *Limitation on investment credit carryovers where there has been a consolidated return change of ownership*—(1) *General rule*. If a consolidated return change of ownership (as defined in paragraph (g) of §1.1502–1) occurs during the taxable year or an earlier taxable year, the amount which may be included under paragraph (b) of this section in the consolidated investment credit carryovers to the taxable year with respect to the aggregate unused credits attributable to old members of the group (as defined in paragraph (g)(3) of §1.1502–1) arising in taxable years (consolidated or separate) ending on the same day and before the taxable year in which the consolidated return change of ownership occurred shall not exceed the amount determined under subparagraph (2) of this paragraph.

(2) *Computation of limitation*. The amount referred to in subparagraph (1) of this paragraph shall be the excess of the consolidated limitation based on the amount of tax for the taxable year, recomputed by including only the items of income, deduction, and foreign tax credit of the old members, over the sum of:

(i) The aggregate investment credits earned by the old members for the taxable year, and

(ii) The aggregate unused investment credits attributable to the old members which may be carried to the taxable year arising in unused credit years ending prior to the particular unused credit year or years.

(3) *Special effective date*. This paragraph (e) applies only to a consolidated return change of ownership that occurred during a consolidated return year for which the due date of the income tax return (without extensions) is on or before March 13, 1998. See paragraph (d)(4) of this section for an optional effective date rule (generally making the rules of this paragraph (e) also inapplicable if the consolidated return change of ownership occurred on or after January 1, 1997, and during a consolidated return year for which the due date of the income tax return (without extensions) is on or before March 13, 1998).

(f) *Early dispositions, etc., of section 38 property*—(1) *Dispositions of section 38 property during and after consolidated return year*. If property is subject to section 47(a) (1) or (2) with respect to a member during a consolidated return year, any increase in tax shall be added to the tax liability of the group under §1.1502–2 (regardless of whether the property was placed in service in a consolidated or separate return year). Also, if property is subject to section 47(a) (1) or (2) with respect to a corporation during a taxable year for which such corporation files on a separate return basis, any increase in tax shall be added to the tax liability of such corporation (regardless of whether such property was placed in service in a consolidated or separate return year).

(2) *Exception for transfer to another member*. (i) Except as provided in subdivisions (ii) and (iii) of this subparagraph, a transfer of section 38 property from one member of the group to another member of such group during a consolidated return year shall not be treated as a disposition or cessation within the meaning of section 47(a)(1). If such section 38 property is disposed of, or otherwise ceases to be section 38 property or becomes public utility property with respect to the transferee, before the close of the estimated useful life which was taken into account in computing qualified investment, then section 47(a) (1) or (2) shall apply to the transferee with respect to such property (determined by taking into account the period of use, qualified investment, other dispositions, etc., of the transferor). Any increase in tax due to the application of section 47(a) (1) or (2) shall be added to the tax liability of

such transferee (or the tax liability of a group, if the transferee joins in the filing of a consolidated return).

(ii) Except as provided in subdivision (iii) of this subparagraph, if section 38 property is disposed of during a consolidated return year by one member of the group to another member of such group which is an organization to which section 593 applies or a cooperative organization described in section 1381(a), the tax under chapter 1 of the Code for such consolidated return year shall be increased by an amount equal to the aggregate decrease in the credits allowed under section 38 for all prior taxable years which would result solely from treating such property, for purposes of determining qualified investment, as placed in service by such organization to which section 593 applies or such cooperative organization described in section 1381(a), as the case may be, but with due regard to the use of the property before such transfer.

(iii) Section 47(a)(1) shall apply to a transfer of section 38 property by a corporation during a consolidated return year if such corporation is liquidated in a transaction to which section 334(b)(2) applies.

(3) *Examples.* The provisions of this paragraph may be illustrated by the following examples:

Example 1. P, S, and T file a consolidated return for calendar year 1967. In such year S places in service section 38 property having an estimated useful life of more than 8 years. In 1968, P, S, and T file a consolidated return and in such year S sells such property to T. Such sale will not cause section 47(a)(1) to apply.

Example 2. Assume the same facts as in example (1), except that P, S, and T filed separate returns for 1967. The sale from S to T will not cause section 47(a)(1) to apply.

Example 3. Assume the same facts as in example (1), except that P, S, and T continue to file consolidated returns through 1971 and in such year T disposes of the property to individual A. Section 47(a)(1) will apply to the group and any increase in tax shall be added to the tax liability of the group. For the purposes of determining the actual period of use by T, such period shall include S's period of use.

Example 4. Assume the same facts as in example (3), except that T files a separate return in 1971. Again, the actual periods of use by S and T will be combined in applying section 47. If the disposition results in an increase in tax under section 47(a)(1), such additional tax shall be added to the separate tax liability of T.

Example 5. Assume the same facts as in example (1), except that in 1969, P sells all the stock of T to a third party. Such sale will not cause section 47(a)(1) to apply.

[T.D. 6894, 31 FR 11794, Sept. 8, 1966, as amended by T.D. 7246, 38 FR 758, Jan. 4, 1973; T.D. 8597, 60 FR 36679, July 18, 1995; T.D. 8751, 63 FR 1742, Jan. 12, 1998; T.D. 8766, 63 FR 12642, Mar. 16, 1998; T.D. 8884, 65 FR 33754, May 25, 2000; 65 FR 48379, Aug. 8, 2000; 65 FR 50281, Aug. 17, 2000]

§ 1.1502–4 Consolidated foreign tax credit.

(a) *In general.* The credit under section 901 for taxes paid or accrued to any foreign country or possession of the United States shall be allowed to the group only if the common parent corporation chooses to use such credit in the computation of the tax liability of the group for the consolidated return year. If this choice is made, no deduction may be taken on the consolidated return for such taxes paid or accrued by any member of the group. See section 275(a)(4).

(b) *Limitation effective under section 904(a) for the group*—(1) *Common parent's limitation effective for group.* The determination of whether the overall limitation or the per-country limitation applies for a consolidated return year shall be made by reference to the limitation effective with respect to the common parent corporation for such year. If the limitation effective with respect to a member for its immediately preceding separate return year differs from the limitation effective with respect to the common parent corporation for the consolidated return year, then such member shall, if the overall limitation is effective with respect to the common parent, be deemed to have made an election to use such overall limitation, or, if the per-country limitation is effective with respect to the common parent, be deemed to have revoked its election to use the overall limitation. Consent of the Secretary or his delegate (if otherwise required) is hereby given to such member for such election or revocation. Any such election or revocation shall apply only prospectively beginning with such consolidated return year.

(2) *Limitation effective for subsequent years*. The limitation effective with respect to a member for the last year for which it joins in the filing of a consolidated return with a group shall remain in effect for a subsequent separate return year and may be changed by such corporation for such subsequent year only in accordance with the provisions of section 904(b) (and this paragraph if it joins in the filing of a consolidated return with another group). Any retroactive change in the limitation by the common parent corporation for such member's last consolidated return year shall change the election effective with respect to such member for such last period. Thus, if the common parent (P) elects the overall limitation with respect to calendar year 1966, such election would be effective with respect to its subsidiary S for 1966. If S leaves the group at the beginning of calendar year 1967, such election shall be effective for 1967 with respect to S (unless S revokes such election for 1967 or a subsequent year in accordance with section 904(b), or this paragraph if it joins in the filing of a consolidated return with another group). However, if P retroactively changes back to the per-country limitation with respect to 1966, such limitation would be effective with respect to S for 1966 and subsequent years (unless S elects the overall limitation for any such subsequent year).

(c) *Computation of consolidated foreign tax credit*. The foreign tax credit for the consolidated return year shall be determined on a consolidated basis under the principles of sections 901 through 905 and section 960. For example, if the per-country limitations applies to the consolidated return year, taxes paid or accrued for such year (including those deemed paid or accrued under sections 902 and 960(a) and paragraph (e) of this section) to each foreign country or possession by the members of the group shall be aggregated. If the overall limitation applies, taxes paid or accrued for such year (including those deemed paid or accrued) to all foreign countries and possessions by members of the group shall be aggregated. If the overall limitation applies and a member of the group qualifies as a Western Hemisphere trade corporation, see section 1503(b).

(d) *Computation of limitation on credit*. For purposes of computing the group's applicable limitation under section 904(a), the following rules shall apply:

(1) *Computation of taxable income from foreign sources*. The numerator of the applicable limiting fraction under section 904(a) shall be an amount (not in excess of the amount determined under subparagraph (2) of this paragraph) equal to the aggregate of the separate taxable incomes of the members from sources within each foreign country or possession of the United States (if the per-country limitation is applicable), or from sources without the United States (if the overall limitation is applicable), determined under § 1.1502–12, adjusted for the following items taken into account in the computation of consolidated taxable income:

(i) The portion of the consolidated net operating loss deduction, the consolidated charitable contributions deduction, the consolidated dividends received deduction, and the consolidated section 922 deduction, attributable to such foreign source income;

(ii) Any such foreign source capital gain net income (net capital gain for taxable years beginning before January 1, 1977) (determined without regard to any net capital loss carryover or carryback);

(iii) Any such foreign source net capital loss and section 1231 net loss, reduced by the portion of the consolidated net capital loss attributable to such foreign source loss; and

(iv) The portion of any consolidated net capital loss carryover or carryback attributable to such foreign source income which is absorbed in the taxable year.

(2) *Computation of entire taxable income*. The denominator of the applicable limiting fraction under section 904(a) (that is, the entire taxable income of the group) shall be the consolidated taxable income of the group computed in accordance with § 1.1502–11.

(3) *Computation of tax against which credit is taken*. The tax against which the limiting fraction under section 904(a) is applied shall be the consolidated tax liability of the group determined under § 1.1502–2, but without regard to paragraphs (b), (c), (d), and (j)

thereof, and without regard to any credit against such liability.

(e) *Carryover and carryback of unused foreign tax*—(1) *Allowance of unused foreign tax as consolidated carryover or carryback.* The aggregate of the consolidated unused foreign tax carryovers and carrybacks to the taxable year, to the extent absorbed for such year under the principles of section 904(d), shall be deemed to be paid or accrued to a foreign country or possession for such year. The consolidated unused foreign tax carryovers and carrybacks to the taxable year shall consist of any consolidated unused foreign tax, plus any unused foreign tax of members for separate return years of such members, which may be carried over or back to the taxable year under the principles of section 904 (d) and (e). However, such consolidated carryovers and carrybacks shall not include any consolidated unused foreign taxes apportioned to a corporation for a separate return year pursuant to §1.1502–79(d) and shall be subject to the limitations contained in paragraphs (f) and (g) of this section. A consolidated unused foreign tax is the excess of the foreign taxes paid or accrued by the group (or deemed paid or accrued by the group, other than by reason of section 904(d) over the applicable limitation for the consolidated return year.

(2) *Absorption rules.* For purposes of determining the amount, if any, of an unused foreign tax (consolidated or separate) which can be carried to a taxable year (consolidated or separate), the amount of such unused tax which is absorbed in a prior consolidated return year under section 904(d) shall be determined by:

(i) Applying all unused foreign taxes which can be carried to such prior year in the order of the taxable years in which such unused taxes arose, beginning with the taxable year which ends earliest, and

(ii) Applying all such unused taxes which can be carried to such prior year from taxable years ending on the same date on a pro rata basis.

(f) *Limitation on unused foreign tax carryover or carryback from separate return limitation years*—(1) General rule. In the case of an unused foreign tax of a member of the group arising in a separate return limitation year (as defined in paragraph (f) of §1.1502–1) of such member, the amount which may be included under paragraph (e) of this section (computed without regard to the limitation contained in paragraph (g) of this section) shall not exceed the amount determined under subparagraph (2) of this paragraph.

(2) *Computation of limitation.* The amount referred to in subparagraph (1) of this paragraph with respect to a member of the group is the excess, if any, of:

(i) The section 904(a) limitation of the group, minus such limitation recomputed by excluding the items of income and deduction of such member, over

(ii) The sum of (*a*) the foreign taxes paid (or deemed paid, other than by reason of section 904(d)) by such member for the consolidated return year, and (*b*) the unused foreign tax attributable to such member which may be carried to such consolidated return year arising in taxable years ending prior to the particular separate return limitation year.

(3) *Limitation on unused foreign tax credit carryover or carryback from separate return limitation years.* Paragraphs (f)(1) and (2) of this section do not apply for consolidated return years for which the due date of the income tax return (without extensions) is after March 13, 1998. For consolidated return years for which the due date of the income tax return (without extensions) is after March 13, 1998, a group shall include an unused foreign tax of a member arising in a SRLY without regard to the contribution of the member to consolidated tax liability for the consolidated return year. See also §1.1502–3(d)(4) for an optional effective date rule (generally making the rules of paragraphs (f)(1) and (2) of this section also inapplicable to a consolidated return year beginning on or after January 1, 1997, if the due date of the income tax return (without extensions) for such year is on or before March 13, 1998).

(g) *Limitation on unused foreign tax carryover where there has been a consolidated return change of ownership*—(1) *General rule.* If a consolidated return change of ownership (as defined in

paragraph (g) of §1.1502–1) occurs during the taxable year or an earlier taxable year, the amount which may be included under paragraph (e) of this section in the consolidated unused foreign tax carryovers to the taxable year with respect to the aggregate unused credits attributable to the old members of the group (as defined in paragraph (g)(3) of §1.1502–1) arising in taxable years (consolidated or separate) ending on the same day and before the taxable year in which the consolidated return change of ownership occurred shall not exceed the amount determined under subparagraph (2) of this paragraph.

(2) *Computation of limitation*. The amount referred to in subparagraph (1) of this paragraph shall be the excess of the section 904(a) limitation of the group for the taxable year, recomputed by including only the items of income and deduction of the old members of the group, over the sum of:

(i) The aggregate foreign taxes paid (or deemed paid, other than by reason of section 904(d)) by the old members for the taxable year, and

(ii) The aggregate unused foreign tax attributable to the old members which can be carried to the taxable year arising in taxable years ending prior to the particular unused foreign tax year or years.

(3) *Special effective date for CRCO limitation*. Paragraphs (g)(1) and (2) of this section apply only to a consolidated return change of ownership that occurred during a consolidated return year for which the due date of the income tax return (without extensions) is on or before March 13, 1998. See also §1.1502–3(d)(4) for an optional effective date rule (generally making the rules of paragraph (g)(1) and (2) of this section also inapplicable if the consolidated return change of ownership occurred on or after January 1, 1997, and during a consolidated return year for which the due date of the income tax return (without extensions) is on or before March 13, 1998).

(h) *Amount of credit with respect to interest income*. If any member of the group has interest income described in section 904(f)(2) (for a year for which it filed on a consolidated or separate basis), the group's foreign tax credit with respect to such interest shall be computed separately in accordance with the principles of section 904(f) and this section.

(i) [Reserved]

(j) *Examples*. The provisions of this section may be illustrated by the following examples:

Example 1. Domestic corporation P is incorporated on January 1, 1966. On that same day it also incorporates domestic corporations S and T, wholly owned subsidiaries. P, S, and T file consolidated returns for 1966 and 1967 on the basis of a calendar year. T engages in business solely in country A. S transacts business solely in countries A and B. P does business solely in the United States. During 1966 T sold an item of inventory to P at a profit of $2,000. Under §1.1502–13 (as contained in the 26 CFR part 1 edition revised as of April 1, 1995) such profit is deferred and none of the circumstances of restoration contained in paragraph (d), (e), or (f) of §1.1502–13 have occurred as of the close of 1966. The taxable income for 1966 from foreign and United States sources, and the foreign taxes paid on such foreign income are as follows:

Corporation	U.S. taxable income	Country A		Country B		Total taxable income
		Taxable income	Foreign tax paid	Taxable income	Foreign tax paid	
P	$40,000					$40,000
T		$20,000	$12,000			20,000
S		10,000	6,000	$10,000	$3,000	20,000
						$80,000

Such taxable income was computed by taking into account the rules provided in §1.1502–12. Thus, the $2,000 deferred profit is not included in T's taxable income for 1966 (but will be included for the taxable year for which one of the events specified in paragraph (d), (e), or (f) of §1.1502–13 occurs). The consolidated taxable income of the group (computed in accordance with §1.1502–11) is $80,000. The consolidated tax liability against which the credit may be taken (computed in accordance with paragraph (d)(3) of this section) is $31,900.

(i) Assuming P chooses to use the foreign taxes paid as a credit and the group is subject to the per-country limitation, the group may take as a credit against the consolidated tax liability $11,962.50 of the amount paid to country A, plus the $3,000 paid to country B. Such amounts are computed as follows: The aggregate taxes paid to country A of $18,000 is limited to $11,962.50 ($31,900 times $30,000/$80,000). The unused foreign tax with respect to country A is $6,037.50 ($18,000 less $11,962.50), and is a consolidated unused foreign tax which shall be carried to the years prescribed by section 904(d). A credit of $3,000 is available with respect to the taxes paid to country B since such amount is less than the limitation of $3,987.50 ($31,900 times $10,000/$80,000).

(ii) Assuming the overall limitation is in effect for the taxable year, the group may take $15,950 as a credit, computed as follows: The aggregate taxes paid to all foreign countries of $21,000 is limited to $15,950 ($31,900 times $40,000/$80,000). The unused foreign tax is $5,050 ($21,000 less $15,950), and is a consolidated unused foreign tax which shall be carried to the years prescribed by section 904(d).

Example 2. Assume the same facts as in example (1), except that T has a $10,000 long-term capital gain (derived from a sale to a nonmember in country A) and P has a $10,000 long-term capital loss (derived from a sale to a nonmember in the United States). Notwithstanding that the consolidated net capital gain (capital gain net income for taxable years beginning after December 31, 1976) of the group is zero, T's capital gain shall be reflected in full in the computation of taxable income from foreign sources.

Example 3. Assume the same facts as in example (1), except that the group had a consolidated section 172 deduction of $8,000 which is attributable to a net operating loss sustained by T. The $8,000 consolidated net operating loss deduction is offset against T's income from country A, thus reducing T's taxable income from country A to $12,000.

[T.D. 6894, 31 FR 11794, Sept. 8, 1966, as amended by T.D. 7728, 45 FR 72650, Nov. 3, 1980; T.D. 8597, 60 FR 36679, July 18, 1995; T.D. 8766, 63 FR 12642, Mar. 16, 1998; T.D. 8884, 65 FR 33758, May 25, 2000]

§ 1.1502–5 Estimated tax.

(a) *General rule*—(1) *Consolidated estimated tax.* If a group files a consolidated return for two consecutive taxable years, it must make payments of estimated tax on a consolidated basis for each subsequent taxable year, until such time as separate returns are properly filed. Until such time, the group is treated as a single corporation for purposes of section 6154 (relating to payment of estimated tax by corporations). If separate returns are filed by the members for a taxable year, the amount of any estimated tax payments made with respect to a consolidated payment of estimated tax for such year shall be credited against the separate tax liabilities of the members in any manner designated by the common parent which is satisfactory to the Commissioner. The consolidated payments of estimated tax shall be deposited with the authorized financial institution with which the common parent deposits its estimated tax payments. A statement should be attached to the payment setting forth the name, address, employer identification number, and internal revenue service center of each member.

(2) *First two consolidated return years.* For the first 2 years for which a group files a consolidated return, it may make payments of estimated tax on either a consolidated or separate basis. If a consolidated return is filed for such year, the amount of any estimated tax payments made for such year by any member shall be credited against the tax liability of the group.

(3) *Effective date.* This section applies to taxable years for which the due date (without extensions) for filing returns is after August 6, 1979. For prior taxable years see 26 CFR 1.1502–5 (Revised as of April 1, 1978).

(b) *Addition to tax for failure to pay estimated tax under section 6655*—(1) *Consolidated return filed.* For the first two taxable years for which a group files a consolidated return, the group may compute the amount of the penalty (if any) under section 6655 on a consolidated basis or separate member basis, regardless of the method of payment. Thereafter, for a taxable year for which the group files a consolidated return, the group must compute the penalty on a consolidated basis.

(2) *Computation of penalty on consolidated basis.* (i) This paragraph (b)(2) gives the rules for computing the penalty under section 6655 on a consolidated basis.

(ii) The tax and facts shown on the return for the preceding taxable year referred to in section 6655(d) (1) and (2) are, if a consolidated return was filed for that preceding year, such items

shown on the consolidated return for that preceding year or, if one was not filed for that preceding year, the aggregate taxes and the facts shown on the separate returns of the common parent and any other corporation that was a member of the same affiliated group as the common parent for that preceding year.

(iii) If estimated tax was not paid on a consolidated basis, then the amount of the group's payments of estimated tax for the taxable year is the aggregate of the payments made by all members for the year.

(iv) Section 6655(d)(1) applies only if the common parent's consolidated return, or each member's separate return, for the preceding taxable year (as the case may be) was a taxable year of 12 months.

(3) *Computation of penalty on separate member basis.* To compute any penalty under section 6655 on a separate member basis, for purposes of section 6655(b)(1), the ''tax shown on the return for the taxable year'' is the portion of the tax shown on the consolidated return allocable to the member under paragraph (b)(5) of this section. If the member was included in the consolidated return filed by the group for the preceding taxable year then:

(i) For purposes of section 6655(d)(1), the ''tax shown on the return'' for any member shall be the portion of the tax shown on the consolidated return for the preceding year allocable to the member under paragraph (b)(5) of this section.

(ii) For purposes of section 6655(d)(2), the ''facts shown on the return'' shall be the facts shown on the consolidated return for the preceding year and the tax computed under that section shall be allocated under the rules of paragraph (b)(5) of this section.

(4) *Consolidated payments if separate returns filed.* If the group does not file a consolidated return for the taxable year, but makes payments of estimated tax on a consolidated basis, for purposes of section 6655(b)(2), the ''amount, if any of the installment paid'' by any member is an amount apportioned to the member in a manner designated by the common parent that is satisfactory to the Commissioner. If the member was included in the consolidated return filed by the group for the preceding taxable year, the amount of a member's penalty under section 6655 is computed on the separate member basis described in paragraph (b)(3)(i) and (ii) of this section.

(5) *Rules for allocation of consolidated tax liability.* For purposes of subparagraphs (1) and (2) of this paragraph, the tax shown on a consolidated return shall be allocated to the members of the group under the method which the group has elected pursuant to section 1552 and 1.1502–33(d)(2).

(c) *Examples.* The provisions of this section may be illustrated by the following examples:

Example 1. Corporations P and S–1 file a consolidated return for the first time for calendar year 1978. P and S–1 also file consolidated returns for 1979 and 1980. For 1978 and 1979, P and S–1 may make payments of estimated tax on either a separate or consolidated basis. For 1980, however, the group must pay its estimated tax on a consolidated basis. In determining whether P and S–1 come within the exception provided in section 6655(d)(1) for 1980, the ''tax shown on the return'' is the tax shown on the consolidated return for 1979.

Example 2. Assume the same facts as in example (1). Assume further that corporation S–2 was a member of the group during 1979, and joins in the filing of the consolidated return for such year but ceases to be a member of the group on September 15, 1980. In determining whether the group (which no longer includes S–2) comes within the exception provided in section 6655(d)(1) for 1980, the ''tax shown on the return'' is the tax shown on the consolidated return for 1979.

Example 3. Assume the same facts as in example (1). Assume further that corporation S–2 becomes a member of the group on July 1, 1980, and joins in the filing of the consolidated return for 1968. In determining whether the group (which now includes S–2) comes within the exception provided in section 6655(d)(1) for 1980, the ''tax shown on the return'' is the tax shown on the consolidated return for 1979. Any tax of S–2 for any separate return year is not included as a part of the ''tax shown on the return'' for purposes of applying section 6655(d)(1).

Example 4. Corporations X and Y filed consolidated returns for the calendar years 1977 and 1978 and separate returns for 1979. In determining whether X and Y comes within the exception provided in section 6655(d)(1) for 1979, the ''tax shown on the return'' is the amount of tax shown on the consolidated return for 1978 allocable to X and Y in accordance with paragraph (b)(5) of this section.

(d) *Cross reference*. For provisions relating to quick refunds of corporate estimated tax payments, see § 1.1502–78, and §§ 1.6425–1 through 1.6425–3.

[T.D. 6894, 31 FR 11794, Sept. 8, 1966, as amended by T.D. 7059, 35 FR 14549, Sept. 17, 1970; T.D. 7637, 44 FR 46840, Aug. 9, 1979; 62 FR 23657, May 1, 1997; T.D. 8952, 66 FR 33831, June 26, 2001]

§ 1.1502–6 Liability for tax.

(a) *Several liability of members of group*. Except as provided in paragraph (b) of this section, the common parent corporation and each subsidiary which was a member of the group during any part of the consolidated return year shall be severally liable for the tax for such year computed in accordance with the regulations under section 1502 prescribed on or before the due date (not including extensions of time) for the filing of the consolidated return for such year.

(b) *Liability of subsidiary after withdrawal*. If a subsidiary has ceased to be a member of the group and in such cessation resulted from a bona fide sale or exchange of its stock for fair value and occurred prior to the date upon which any deficiency is assessed, the Commissioner may, if he believes that the assessment or collection of the balance of the deficiency will not be jeopardized, make assessment and collection of such deficiency from such former subsidiary in an amount not exceeding the portion of such deficiency which the Commissioner may determine to be allocable to it. If the Commissioner makes assessment and collection of any part of a deficiency from such former subsidiary, then for purposes of any credit or refund of the amount collected from such former subsidiary the agency of the common parent under the provisions of § 1.1502–77 shall not apply.

(c) *Effect of intercompany agreements*. No agreement entered into by one or more members of the group with any other member of such group or with any other person shall in any case have the effect of reducing the liability prescribed under this section.

[T.D. 6894, 31 FR 11794, Sept. 8, 1966, as amended by T.D. 9002, 67 FR 43540, June 28, 2002]

§ 1.1502–9 Consolidated overall foreign losses, separate limitation losses, and overall domestic losses.

(a) *In general*. This section provides rules for applying section 904(f) and (g) (including its definitions and nomenclature) to a group and its members. Generally, section 904(f) concerns rules relating to overall foreign losses (OFLs) and separate limitation losses (SLLs) and the consequences of such losses. Under section 904(f)(5), losses are computed separately in each category of income described in section 904(d)(1) or § 1.904–4(m) (separate category). Section 904(g) concerns rules relating to overall domestic losses (ODLs) and the consequences of such losses. Paragraph (b) of this section defines terms and provides computational and accounting rules, including rules regarding recapture. Paragraph (c) of this section provides rules that apply to OFLs, SLLs, and ODLs when a member becomes or ceases to be a member of a group. Paragraph (d) of this section provides a predecessor and successor rule. Paragraph (e) of this section provides effective dates.

(b) *Consolidated application of section 904(f) and (g)*. A group applies section 904(f) and (g) for a consolidated return year in accordance with that section, subject to the following rules:

(1) *Computation of CSLI or CSLL and consolidated U.S.-source taxable income or CDL*. The group computes its consolidated separate limitation income (CSLI) or consolidated separate limitation loss (CSLL) for each separate category under the principles of § 1.1502–11 by aggregating each member's foreign-source taxable income or loss in such separate category computed under the principles of § 1.1502–12, and taking into account the foreign portion of the consolidated items described in § 1.1502–11(a)(2) through (a)(8) for such separate category. The group computes its consolidated U.S.-source taxable income or consolidated domestic loss (CDL) under similar principles.

(2) *Netting CSLLs, CSLIs, and consolidated U.S.-source taxable income*. The group applies section 904(f)(5) to determine the extent to which a CSLL for a separate category reduces CSLI for another separate category or consolidated U.S.-source taxable income.

(3) *Netting CDL and CSLI.* The group applies section 904(g)(2) to determine the extent to which a CDL reduces CSLI.

(4) *CSLL, COFL, and CODL accounts.* To the extent provided in section 904(f), the amount by which a CSLL for a separate category (the loss category) reduces CSLI for another separate category (the income category) will result in the creation of (or addition to) a CSLL account for the loss category with respect to the income category. Likewise, the amount by which a CSLL for a loss category reduces consolidated U.S.-source taxable income will create (or add to) a consolidated overall foreign loss account (a COFL account). To the extent provided in section 904(g), the amount by which a CDL reduces CSLI will result in the creation of (or addition to) a consolidated overall domestic loss (CODL) account for the income category reduced by the CDL.

(5) *Recapture of COFL, CSLL, and CODL accounts.* In the case of a COFL account for a loss category, section 904(f)(1) and section 904(f)(3) recharacterize some or all of the foreign-source income in the loss category as U.S.-source income. In the case of a CSLL account for a loss category with respect to an income category, section 904(f)(5)(C) and section 904(f)(5)(F) recharacterize some or all of the foreign-source income in the loss category as foreign-source income in the income category. In the case of a CODL account, section 904(g)(3) recharacterizes some of the U.S.-source income as foreign-source income in the separate category that was offset by the CDL. The COFL account, CSLL account, or CODL account is reduced to the extent income is recharacterized with respect to such account.

(6) *Intercompany transactions*—(i) *Non-application of section 904(f) disposition rules.* Neither section 904(f)(3) (in the case of a COFL account) nor section 904(f)(5)(F) (in the case of a CSLL account) applies at the time of a disposition that is an intercompany transaction to which §1.1502–13 applies. Instead, section 904(f)(3) and section 904(f)(5)(F) apply only at such time and only to the extent that the group is required under §1.1502–13 (without regard to section 904(f)(3) and section 904(f)(5)(F)) to take into account any intercompany items resulting from the disposition, based on the COFL or CSLL account existing at the end of the consolidated return year during which the group takes the intercompany items into account.

(ii) *Examples.* Paragraph (b)(6)(i) of this section is illustrated by the following examples. The identity of the parties and the basic assumptions set forth in §1.1502–13(c)(7)(i) apply to the examples. Except as otherwise stated, assume further that the consolidated group recognizes no foreign source income other than as a result of the transactions described. The examples are as follows:

Example 1. (i) On June 10, year 1, S transfers nondepreciable property with a basis of $100 and a fair market value of $250 to B in a transaction to which section 351 applies. The property was predominantly used without the United States in a trade or business within the meaning of section 904(f)(3). B continues to use the property without the United States. The group has a COFL account in the relevant loss category of $120 as of December 31, year 1.

(ii) Because the contribution from S to B is an intercompany transaction, section 904(f)(3) does not apply to result in any gain recognition in year 1. See paragraph (b)(5)(i) of this section.

(iii) On January 10, year 4, B ceases to be a member of the group. Because S did not recognize gain in year 1 under section 351, no gain is taken into account in year 4 under §1.1502–13. Thus, no portion of the group's COFL account is recaptured in year 4. For rules requiring apportionment of a portion of the COFL account to B, see paragraph (c)(2) of this section.

Example 2. (i) The facts are the same as in paragraph (i) of *Example 1.* On January 10, year 4, B sells the property to X for $300. As of December 31, year 4, the group's COFL account is $40. (The COFL account was reduced between year 1 and year 4 due to unrelated foreign-source income taken into account by the group.)

(ii) B takes into account gain of $200 in year 4. The $40 COFL account in year 4 recharacterizes $40 of the gain as U.S. source. See section 904(f)(3).

Example 3. (i) On June 10, year 1, S sells nondepreciable property with a basis of $100 and a fair market value of $250 to B for $250 cash. The property was predominantly used without the United States in a trade or business within the meaning of section 904(f)(3). The group has a COFL account in the relevant loss category of $120 as of December 31,

year 1. B predominantly uses the property in a trade or business without the United States.

(ii) Because the sale is an intercompany transaction, section 904(f)(3) does not require the group to take into account any gain in year 1. Thus, under paragraph (b)(5)(i) of this section, the COFL account is not reduced in year 1.

(iii) On January 10, year 4, B sells the property to X for $300. As of December 31, year 4, the group's COFL account is $60. (The COFL account was reduced between year 1 and year 4 due to unrelated foreign-source income taken into account by the group.)

(iv) In year 4, S's $150 intercompany gain and B's $50 corresponding gain are taken into account to produce the same effect on consolidated taxable income as if S and B were divisions of a single corporation. See § 1.1502–13(c). All of B's $50 corresponding gain is recharacterized under section 904(f)(3). If S and B were divisions of a single corporation and the intercompany sale were a transfer between the divisions, B would succeed to S's $100 basis in the property and would have $200 of gain ($60 of which would be recharacterized under section 904(f)(3)), instead of a $50 gain. Consequently, S's $150 intercompany gain and B's $50 corresponding gain are taken into account, and $10 of S's gain is recharacterized under section 904(f)(3) as U.S. source income to reflect the $10 difference between B's $50 recharacterized gain and the $60 recomputed gain that would have been recharacterized.

(c) *Becoming or ceasing to be a member of a group*—(1) *Adding separate accounts on becoming a member*. At the time that a corporation becomes a member of a group (a new member), the group adds to the balance of its COFL, CSLL or CODL account the balance of the new member's corresponding OFL account, SLL account or ODL account. A new member's OFL account corresponds to a COFL account if the account is for the same loss category. A new member's SLL account corresponds to a CSLL account if the account is for the same loss category and with respect to the same income category. A new member's ODL account corresponds to a CODL account if the account is with respect to the same income category. If the group does not have a COFL, CSLL or CODL account corresponding to the new member's account, it creates a COFL, CSLL or CODL account with a balance equal to the balance of the member's account.

(2) *Apportionment of consolidated account to departing member*—(i) *In general*. A group apportions to a member that ceases to be a member (a departing member) a portion of each COFL, CSLL and CODL account as of the end of the year during which the member ceases to be a member and after the group makes the additions or reductions to such account required under paragraphs (b)(4), (b)(5), and (c)(1) of this section (other than an addition under paragraph (c)(1) of this section attributable to a member becoming a member after the departing member ceases to be a member). The group computes such portion under paragraph (c)(2)(ii) of this section, as limited by paragraph (c)(2)(iii) of this section. The departing member carries such portion to its first separate return year after it ceases to be a member. Also, the group reduces each account by such portion and carries such reduced amount to its first consolidated return year beginning after the year in which the member ceases to be a member. If two or more members cease to be members in the same year, the group computes the portion allocable to each such member (and reduces its accounts by such portion) in the order that the members cease to be members.

(ii) *Departing member's portion of group's account*. A departing member's portion of a group's COFL, CSLL or CODL account for a loss category is computed based upon the member's share of the group's assets that generate income subject to recapture at the time that the member ceases to be a member. Under the characterization principles of §§ 1.861–9T(g)(3) and 1.861–12T, the group identifies the assets of the departing member and the remaining members that generate U.S.-source income (domestic assets) and foreign-source income (foreign assets) in each separate category. The assets are characterized based upon the income that the assets are reasonably expected to generate after the member ceases to be a member. The member's portion of a group's COFL or CSLL account for a loss category is the group's COFL or CSLL account, respectively, multiplied by a fraction, the numerator of which is the value of the member's foreign assets for the loss category and the denominator of which is the value of the foreign assets of the group (including

the departing member) for the loss category. The member's portion of a group's CODL account for each income category is the group's CODL account multiplied by a fraction, the numerator of which is the value of the member's domestic assets and the denominator of which is the value of the domestic assets of the group (including the departing member). The value of the domestic and foreign assets is determined under the asset valuation rules of §1.861–9T(g)(1) and (2) using either tax book value, fair market value, or alternative tax book value under the method chosen by the group for purposes of interest apportionment as provided in §1.861–9T(g)(1)(ii). For purposes of this paragraph (c)(2)(ii), §1.861–9T(g)(2)(iv) (assets in intercompany transactions) shall apply, but §1.861–9T(g)(2)(iii) (adjustments for directly allocated interest) shall not apply. If the group uses the tax book value method, the member's portions of COFL, CSLL, and CODL accounts are limited by paragraph (c)(2)(iii) of this section. In addition, for purposes of this paragraph (c)(2)(ii), the tax book value of assets transferred in intercompany transactions shall be determined without regard to previously deferred gain or loss that is taken into account by the group as a result of the transaction in which the member ceases to be a member. The assets should be valued at the time the member ceases to be a member, but values on other dates may be used unless this creates substantial distortions. For example, if a member ceases to be a member in the middle of the group's consolidated return year, an average of the values of assets at the beginning and end of the year (as provided in §1.861–9T(g)(2)) may be used or, if a member ceases to be a member in the early part of the group's consolidated return year, values at the beginning of the year may be used, unless this creates substantial distortions.

(iii) *Limitation on member's portion for groups using tax book value method.* If a group uses the tax book value method of valuing assets for purposes of paragraph (c)(2)(ii) of this section and the aggregate of a member's portions of COFL and CSLL accounts for a loss category (with respect to one or more income categories) determined under paragraph (c)(2)(ii) of this section exceeds 150 percent of the actual fair market value of the member's foreign assets in the loss category, the member's portion of the COFL or CSLL accounts for the loss category shall be reduced (proportionately, in the case of multiple accounts) by such excess. In addition, if the aggregate of a member's portions of CODL accounts (with respect to one or more income categories) determined under paragraph (c)(2)(ii) of this section exceeds 150 percent of the actual fair market value of the member's domestic assets, the member's portion of the CODL accounts shall be reduced (proportionately, in the case of multiple accounts) by such excess. This rule does not apply in the case of COFL or CSLL accounts if the departing member and all other members that cease to be members as part of the same transaction own all (or substantially all) the foreign assets in the loss category. In the case of CODL accounts, this rule does not apply if the departing member and all other members that cease to be members as part of the same transaction own all (or substantially all) the domestic assets.

(iv) *Determination of values of domestic and foreign assets binding on departing member.* The group's determination of the value of the member's and the group's domestic and foreign assets for a loss category is binding on the member, unless the Commissioner concludes that the determination is not appropriate. The common parent of the group must attach a statement to the return for the taxable year that the departing member ceases to be a member of the group that sets forth the name and taxpayer identification number of the departing member, the amount of each COFL and CSLL for each loss category and each CODL that is apportioned to the departing member under this paragraph (c)(2), the method used to determine the value of the member's and the group's domestic and foreign assets in each such loss category, and the value of the member's and the group's domestic and foreign assets in each such loss category. The common parent must also furnish a copy of the statement to the departing member.

(v) *Anti-abuse rule*. If a corporation becomes a member and ceases to be a member, and a principal purpose of the corporation becoming and ceasing to be a member is to transfer the corporation's OFL account, SLL account or ODL account to the group or to transfer the group's COFL, CSLL or CODL account to the corporation, appropriate adjustments will be made to eliminate the benefit of such a transfer of accounts. Similarly, if any member acquires assets or disposes of assets (including a transfer of assets between members of the group and the departing member) with a principal purpose of affecting the apportionment of accounts under paragraph (c)(2)(i) of this section, appropriate adjustments will be made to eliminate the benefit of such acquisition or disposition.

(vi) *Examples*. The following examples illustrate the rules of this paragraph (c):

Example 1. (i) On November 6, year 1, S, a member of the P group, a consolidated group with a calendar consolidated return year, ceases to be a member of the group. On December 31, year 1, the P group has a $40 COFL account for the general category, a $20 CSLL account for the general category (that is, the loss category) with respect to the passive category (that is, the income category), and a $10 CODL account with respect to the passive category (that is, the income category). No member of the group has foreign-source income or loss in year 1. The group apportions its interest expense according to the tax book value method.

(ii) On November 6, year 1, the group identifies S's assets and the group's assets (including S's assets) expected to produce foreign-source general category income. Use of end-of-the-year values will not create substantial distortions in determining the relative values of S's and the group's relevant assets on November 6, year 1. The group determines that S's relevant assets have a tax book value of $2,000 and a fair market value of $2,200. Also, the group's relevant assets (including S's assets) have a tax book value of $8,000. On November 6, year 1, S has no assets expected to produce U.S. source income.

(iii) Under paragraph (c)(2)(ii) of this section, S takes a $10 COFL account for the general category ($40 × $2,000/$8,000) and a $5 CSLL account for the general category with respect to the passive category ($20 × $2,000/$8,000). S does not take any portion of the CODL account. The limitation described in paragraph (c)(2)(iii) of this section does not apply because the aggregate of the COFL and CSLL accounts for the general category that are apportioned to S ($15) is less than 150% of the actual fair market value of S's general category foreign assets ($2,200 × 150%).

Example 2. (i) Assume the same facts as in *Example 1*, except that the fair market value of S's general category foreign assets is $4 as of November 6, year 1.

(ii) Under paragraph (c)(2)(iii) of this section, S's COFL and CSLL accounts for the general category must be reduced by $9, which is the excess of $15 (the aggregate amount of the accounts apportioned under paragraph (c)(2)(ii) of this section) over $6 (150% of the $4 actual fair market value of S's general category foreign assets). S thus takes a $4 COFL account for the general category ($10 − ($9 × $10/$15)) and a $2 CSLL account for the general category with respect to the passive category ($5 − ($9 × $5/$15)).

Example 3. (i) Assume the same facts as in *Example 1*, except that S also has assets that are expected to produce U.S. source income.

(ii) On November 6, year 1, the group identifies S's assets and the group's assets (including S's assets) expected to produce U.S. source income. Use of end-of-the-year values will not create substantial distortions in determining the relative values of S's and the group's relevant assets on November 6, year 1. The group determines that S's relevant assets have a tax book value of $3,000 and a fair market value of $2,500. Also, the group's relevant assets (including S's assets) have a tax book value of $6,000.

(iii) Under paragraph (c)(2)(ii) of this section, S takes a $5 CODL account ($10 × $3,000/$6,000), in addition to the COFL and CSLL accounts determined in *Example 1*. The limitation described in paragraph (c)(2)(iii) of this section does not apply because the CODL account that is apportioned to S ($5) is less than 150% of the actual fair market value of S's U.S. assets ($2,500 × 150%).

(d) *Predecessor and successor*. A reference to a member includes, as the context may require, a reference to a predecessor or successor of the member. See § 1.1502–1(f).

(e) *Effective/applicability date*. This section applies to consolidated return years beginning on or after January 1, 2012, for which the return is due (without extensions) after June 22, 2012. Taxpayers may choose to apply the provisions of this section to other consolidated return years beginning after December 31, 2006, including periods covered by 26 CFR 1.1502–9T (revised as of April 1, 2010). For rules relating to overall foreign losses and separate limitation losses in consolidated return years beginning on or before December

21, 2007, see 26 CFR 1.1502–9 (revised as of April 1, 2007).

[T.D. 9595, 77 FR 37585, June 21, 2012]

COMPUTATION OF CONSOLIDATED TAXABLE INCOME

§ 1.1502–11 Consolidated taxable income.

(a) *In general.* The consolidated taxable income for a consolidated return year shall be determined by taking into account:

(1) The separate taxable income of each member of the group (see § 1.1502–12 for the computation of separate taxable income);

(2) Any consolidated net operating loss deduction (see §§ 1.1502–21 (or 1.1502-21A, as appropriate) for the computation of the consolidated net operating loss deduction);

(3) Any consolidated capital gain net income (net capital gain for taxable years beginning before January 1, 1977) (see §§ 1.1502–22 (or 1.1502-22A, as appropriate) for the computation of the consolidated capital gain net income (net capital gain for taxable years beginning before January 1, 1977));

(4) Any consolidated section 1231 net loss (see §§ 1.1502–23 (or 1.1502-23A, as appropriate) for the computation of the consolidated section 1231 net loss);

(5) Any consolidated charitable contributions deduction (see § 1.1502–24 for the computation of the consolidated charitable contributions deduction);

(6) Any consolidated section 922 deduction (see § 1.1502–25 for the computation of the consolidated section 922 deduction);

(7) Any consolidated dividends received deduction (see § 1.1502–26 for the computation of the consolidated dividends received deduction); and

(8) Any consolidated section 247 deduction (see § 1.1502–27 for the computation of the consolidated section 247 deduction).

(b) *Elimination of circular stock basis adjustments when there is no excluded COD income*—(1) *In general.* If one member (P) disposes of the stock of another member (S), this paragraph (b) limits the use of S's deductions and losses in the year of disposition and the carryback of items to prior years. The purpose of the limitation is to prevent P's income or gain from the disposition of S's stock from increasing the absorption of S's deductions and losses, because the increased absorption would reduce P's basis (or increase its excess loss account) in S's stock under § 1.1502–32 and, in turn, increase P's income or gain. See paragraph (b)(3) of this section for the application of these principles to P's deduction or loss from the disposition of S's stock, and paragraph (b)(4) of this section for the application of these principles to multiple stock dispositions. This paragraph (b) applies only when no member realizes discharge of indebtedness income that is excluded from gross income under section 108(a) (excluded COD income) during the taxable year of the disposition. See paragraph (c) of this section for rules that apply when a member realizes excluded COD income during the taxable year of the disposition. See § 1.1502–19(c) for the definition of disposition.

(2) *Limitation on deductions and losses*—(i) *Determination of amount of limitation.* If P disposes of one or more shares of S's stock, the extent to which S's deductions and losses for the tax year of the disposition (and its deductions and losses carried over from prior years) may offset income and gain is subject to limitation. The amount of S's deductions and losses that may offset income and gain is determined by tentatively computing taxable income (or loss) for the year of disposition (and any prior years to which the deductions or losses may be carried) without taking into account P's income and gain from the disposition.

(ii) *Application of limitation.* S's deductions and losses offset income and gain only to the extent of the amount determined under paragraph (b)(2)(i) of this section. To the extent S's deductions and losses in the year of disposition cannot offset income or gain because of the limitation under this paragraph (b), the items are carried to other years under the applicable provisions of the Internal Revenue Code and regulations as if they were the only items incurred by S in the year of disposition. For example, to the extent S incurs an operating loss in the year of disposition that is limited, the loss is treated as a separate net operating loss

attributable to S arising in that year. The tentative computation does not affect the manner in which S's unlimited deductions and losses are absorbed or the manner in which deductions and losses of other members are absorbed. (If the amount of S's unlimited deductions and losses actually absorbed is less than the amount absorbed in the tentative computation, P's stock basis adjustments under §1.1502–32 reflect only the amounts actually absorbed.)

(iii) *Examples.* For purposes of the examples in this paragraph (b), unless otherwise stated, P owns all of the only class of S's stock for the entire year, S owns no stock of lower-tier members, the tax year of all persons is the calendar year, all persons use the accrual method of accounting, the facts set forth the only corporate activity, all transactions are between unrelated persons, and tax liabilities are disregarded. The principles of this paragraph (b)(2) are illustrated by the following examples.

Example 1. Limitation on losses with respect to stock gain. (a) P has a $500 basis in S's stock. For Year 1, P has ordinary income of $30 (determined without taking P's gain or loss from the disposition of S's stock into account) and S has an $80 ordinary loss. P sells S's stock for $520 at the close of Year 1.

(b) To determine the amount of the limitation on S's loss under paragraph (b)(2)(i) of this section, and the effect under §1.1502–32(b) of the absorption of S's loss on P's basis in S's stock, P's gain or loss from the disposition of S's stock is not taken into account. The group is tentatively treated as having a consolidated net operating loss of $50 (P's $30 of income minus S's $80 loss). Thus, $50 of S's loss is limited under this paragraph (b).

(c) Because $30 of S's loss is absorbed in the determination of consolidated taxable income under paragraph (b)(2)(ii) of this section, P's basis in S's stock is reduced under §1.1502–32(b) from $500 to $470 immediately before the disposition. Consequently, P recognizes a $50 gain from the sale of S's stock and the group has consolidated taxable income of $50 for Year 1 (P's $30 of ordinary income and $50 gain from the sale of S's stock, less the $30 of S's loss). In addition, S's limited loss of $50 is treated as a separate net operating loss attributable to S and, because S ceases to be a member, the loss is apportioned to S under §1.1502–21 (or §1.1502-79A, as appropriate) and carried to its first separate return year.

Example 2. Carrybacks and carryovers. (a) For Year 1, the P group has consolidated taxable income of $30, and a consolidated net capital loss of $100 ($50 attributable to P and $50 to S). At the beginning of Year 2, P has a $300 basis in S's stock. For Year 2, P has ordinary income of $30, and a $20 capital gain (determined without taking the $100 consolidated net capital loss carryover or P's gain or loss from the disposition of S's stock into account), and S has a $100 ordinary loss. P sells S's stock for $280 at the close of Year 2.

(b) To determine the amount of the limitation under paragraph (b)(2)(i) of this section on S's losses, and the effect of the absorption of S's losses on P's basis in S's stock under §1.1502–32(b), P's gain or loss from the disposition of S's stock is not taken into account. For Year 2, the P group is tentatively treated as having a $70 consolidated net operating loss (S's $100 ordinary loss, less P's $30 of ordinary income). The P group is also treated as having no consolidated net capital gain in Year 2, because P's $20 capital gain is reduced by $20 of the consolidated net capital loss carryover from Year 1 under section 1212(a) (the absorption of which is attributed equally to P and S). In addition, of the $70 consolidated net operating loss, $30 is carried back to Year 1 and offsets P's ordinary income in that year, and $40 is carried forward. Consequently, $40 of S's operating loss from Year 2, and $40 of the consolidated net capital loss carryover from Year 1 attributable to S, are limited under this paragraph (b).

(c) Under paragraph (b)(2)(ii) of this section, the limitation under this paragraph (b) does not affect the absorption of any deductions and losses attributable to P, $60 of S's operating loss from Year 2, and $10 of the consolidated net capital loss from Year 1 attributable to S. Consequently, P's basis in S's stock is reduced under §1.1502–32(b) by $70, from $300 to $230, and P recognizes a $50 gain from the sale of S's stock in Year 2. Thus, the P group is treated as having a $20 unlimited net operating loss that is carried back to Year 1:

Ordinary income:	
P	$30
S (excluding the $40 limited loss)	(60)
Sub Total	$(30)
Consolidated net capital gain:	
P ($20 + $50 from S stock − $50 from Year 1)	$20
S (−$10 from Year 1)	(10)
Sub Total	$10
Consolidated taxable income	$(20)

(d) Under paragraph (b)(2)(ii) of this section, S's $40 ordinary loss from Year 2 that is limited under this paragraph (b) is treated as a separate net operating loss arising in Year 2. Similarly, $40 of the consolidated net capital loss from Year 1 attributable to S is treated as a separate net capital loss carried over from Year 1. Because S ceases to be a

member, the $40 net operating loss from Year 2 and the $40 consolidated net capital loss from Year 1 are allocated to S under §§ 1.1502–21 and 1.1502–22, respectively (or § 1.1502-79A, as appropriate) and are carried to S's first separate return year.

Example 3. Allocation of basis adjustments. (a) For Year 1, the P group has consolidated taxable income of $100. At the beginning of Year 2, P has a $40 basis in each of the 10 shares of S's stock. For Year 2, P has an $80 ordinary loss (determined without taking into account P's gain or loss from the disposition of S's stock) and S has an $80 ordinary loss. P sells 2 shares of S's stock for $85 each at the close of Year 2.

(b) Under paragraph (b)(2)(i) of this section, the amount of the limitation on S's loss is determined by tentatively treating the P group as having a $160 consolidated net operating loss for Year 2. Of this amount, $100 is carried back under section 172 and absorbed in Year 1 ($50 attributable to S and $50 attributable to P). Consequently, $30 of S's loss is limited under this paragraph (b).

(c) Under paragraph (b)(2)(ii) of this section, the limitation under this paragraph (b) does not affect the absorption of P's $80 ordinary loss or $50 of S's ordinary loss. Consequently, P's basis in each share of S's stock is reduced from $40 to $35 under § 1.1502–32(b), and P recognizes a $100 gain from the sale of the 2 shares. Thus, the P group is treated as having a $30 unlimited net operating loss:

Ordinary loss:	
P	$(80)
S (excluding the $30 limited loss)	(50)
Sub Total	$(130)
Consolidated net capital gain:	
P	$100
S	0
Sub Total	$100
Unlimited consolidated net operating loss	$(30)

(d) A portion of the $130 of unlimited operating losses for Year 2 is fully absorbed in that year, and a portion is carried back to Year 1. Thus, $61.50 of P's $80 loss ($100 multiplied by $80/$130) and $38.50 of S's $50 unlimited loss ($100 multiplied by $50/$130) are absorbed in Year 2. P's remaining $18.50 of loss and S's remaining $11.50 of loss are not subject to limitation and are carried back and absorbed in Year 1.

(e) Under paragraph (b)(2)(ii) of this section, S's $30 of loss limited under this paragraph (b) is treated as a separate net operating loss.

(3) *Loss dispositions*—(i) *General rule.* The principles of paragraph (b)(2) of this section apply to the extent necessary to carry out the purposes of paragraph (b)(1) of this section if P recognizes a deduction or loss from the disposition of S's stock.

(ii) *Example.* The principles of this paragraph (b)(3) are illustrated by the following example.

Example. (a) P has a $400 basis in S's stock. For Year 1, P has a capital gain of $100 (determined without taking P's gain or loss from the disposition of S's stock into account) and S has both a $60 capital loss and a $200 ordinary loss. P sells S's stock for $140 at the close of Year 1.

(b) Under paragraph (b)(3) of this section, the amount of S's ordinary and capital losses that may offset income and gain is determined by tentatively computing the group's consolidated net operating loss and consolidated net capital loss without taking into account P's loss from the disposition of S's stock. The limitation is necessary to prevent P's loss from the disposition of S's stock from affecting the absorption of S's losses and thereby the adjustments to P's basis in S's stock under § 1.1502–32(b) (which would, in turn, affect P's loss).

(c) Under the principles of paragraph (b)(2)(i) of this section, the amount of the limitation on S's loss is determined by tentatively treating the P group as having a $40 consolidated net capital gain and a $200 ordinary loss, which results in a $160 consolidated net operating loss for Year 1, all of which is attributable to S. Thus, $160 of S's ordinary loss is limited under this paragraph (b). *See also* §§ 1.337(d)–2, 1.1502–35, and 1.1502–36 for rules relating to basis adjustments and allowance of stock loss on dispositions of stock of a subsidiary member.

(4) *Multiple dispositions*—(i) *Stock of a member.* To the extent income, gain, deduction, or loss from a prior disposition of S's stock is deferred under any rule of law, the limitation under paragraph (b)(2) of this section is determined by treating the year the deferred amount is taken into account as the year of the disposition.

(ii) *Stock of different members.* If S is a higher-tier corporation with respect to another member (T), and all of T's items of income, gain, deduction, and loss (including the absorption of T's deduction or loss) would be fully reflected in P's basis in S's stock under § 1.1502–32, the limitation under paragraph (b)(2)(i) of this section with respect to T's deductions and losses is determined without taking into account any income, gain, deduction, or loss from the disposition of the stock of S or T (or of the stock of members owned

in the chain connecting S and T). However, this paragraph (b) does not otherwise limit the absorption of one member's deduction or loss with respect to the disposition of another member's stock.

(iii) *Examples*. The principles of this paragraph (b)(4) are illustrated by the following examples.

Example 1. Chain of subsidiaries. (a) P owns all of S's stock with a $500 basis, and S owns all of T's stock with a $500 basis. For Year 1, P has ordinary income of $30, S has no income or loss, and T has an $80 ordinary loss. P sells S's stock for $520 at the close of Year 1.

(b) Under paragraph (b)(4) of this section, to determine the amount of the limitation under paragraph (b) of this section on T's loss, and the effect of the absorption of T's loss on P's basis in S's stock under §1.1502–32(b), P's gain or loss from the disposition of S's stock is not taken into account. The group is tentatively treated as having a consolidated net operating loss of $50 (P's $30 of income minus T's $80 loss). Because only $30 of T's loss offsets income or gain, P's basis in S's stock is reduced under §1.1502–32(b) from $500 to $470 immediately before the disposition of S's stock. Thus, P takes into account a $50 gain from the sale of S's stock.

(c) The facts are the same as in paragraph (a) of this *Example 1*, except that S has a $10 excess loss account in T's stock (rather than a $500 basis). Under paragraph (b)(4) of this section, neither P's gain or loss from the disposition of S's stock nor S's gain or loss from the disposition of T's stock (under §1.1502–19) are taken into account for purposes of the tentative computations and the effect of any absorption under §1.1502–32(b) on P's basis in S's stock and S's excess loss account in T's stock. The group is tentatively treated as having a consolidated net operating loss of $50 (P's $30 of income minus T's $80 loss), and only $30 of T's loss may offset the group's income or gain. Under §1.1502–32(b), the absorption of $30 of T's loss increases S's excess loss account in T's stock to $40 and, under §1.1502–19, the excess loss account is taken into account. Moreover, under §1.1502–32(b), P's basis in S's stock is increased immediately before the sale by $10 (S's $40 gain under §1.1502–19(b) minus T's $30 loss absorbed and tiered up under §1.1502–32(b)), from $500 to $510. Thus, P takes into account a $10 gain from the sale of S's stock, and S takes into account a $40 gain from its excess loss account in T's stock.

Example 2. Brother-sister subsidiaries. (a) P owns all of the stock of S1 and S2, each with a $50 basis. For Year 1, the group has a $100 consolidated net operating loss ($50 of which is attributable to S1, and $50 to S2) determined without taking gain or loss from the disposition of member stock into account. At the close of Year 1, P sells the stock of S1 and S2 for $100 each.

(b) Paragraph (b)(4) of this section does not limit the loss of S1 or S2 with respect to the disposition of stock of the other. Consequently, each subsidiary's loss may offset P's gain from the disposition of the stock of the other subsidiary. Because this absorption results in a $50 reduction in P's basis in the stock of each subsidiary under §1.1502–32(b), P's aggregate gain from the stock dispositions is increased from $100 to $200, $100 of which is offset by the losses of the subsidiaries.

(5) *Effective date*. This paragraph (b) applies to stock dispositions occurring in consolidated return years beginning on or after January 1, 1995. For prior years, see §1.1502–11(b) as contained in the 26 CFR part 1 edition revised as of April 1, 1994.

(c) *Elimination of circular stock basis adjustments when there is excluded COD income*—(1) *In general*. If one member (P) disposes of the stock of another member (S) in a year during which any member realizes excluded COD income, this paragraph (c) limits the use of S's deductions and losses in the year of disposition and the carryback of items to prior years, the amount of the attributes of certain members that can be reduced in respect of excluded COD income of certain other members, and the attributes that can be used to offset an excess loss account taken into account by reason of the application of §1.1502–19(c)(1)(iii)(B). In addition to the purpose set forth in paragraph (b)(1) of this section, the purpose of these limitations is to prevent the reduction of tax attributes in respect of excluded COD income from affecting P's income, gain, or loss on the disposition of S stock (including a disposition of S stock that results from the application of §1.1502–19(c)(1)(iii)(B)) and, in turn, affecting the attributes available for reduction pursuant to sections 108 and 1017 and §1.1502–28. See §1.1502–19(c) for the definition of disposition.

(2) *Computation of tax liability, reduction of attributes, and computation of limits on absorption and reduction of attributes*. If a member realizes excluded COD income in the taxable year during which P disposes of S stock, the steps used to compute tax liability, to effect the reduction of attributes, and to

compute the limitations on the absorption and reduction of attributes are as follows. These steps also apply to determine whether and to what extent an excess loss account must be taken into account as a result of the application of § 1.1502–19(b)(1) and (c)(1)(iii)(B).

(i) *Limitation on deductions and losses to offset income or gain.* First, the determination of the extent to which S's deductions and losses for the tax year of the disposition (and its deductions and losses carried over from prior years) may offset income and gain is made pursuant to paragraphs (b)(2) and (3) of this section.

(ii) *Tentative adjustment of stock basis.* Second, § 1.1502–32 is tentatively applied to adjust the basis of the S stock to reflect the amount of S's income and gain included, and unlimited deductions and losses that are absorbed, in the tentative computation of taxable income or loss for the year of the disposition (and any prior years) that is made pursuant to paragraph (b)(2) of this section, but not to reflect the realization of excluded COD income and the reduction of attributes in respect thereof.

(iii) *Tentative computation of stock gain or loss.* Third, in the case of a disposition of S stock that does not result from the application of § 1.1502–19(c)(1)(iii)(B), P's income, gain, or loss from the disposition of S stock is computed. For this purpose, the result of the computation pursuant to paragraph (c)(2)(ii) of this section is treated as the basis of such stock.

(iv) *Tentative computation of tax imposed.* Fourth, the tax imposed by chapter 1 of the Internal Revenue Code for the year of disposition (and any prior years) is tentatively computed. For this purpose, in the case of a disposition of S stock that does not result from the application of § 1.1502–19(c)(1)(iii)(B), the tentative computation of tax imposed takes into account P's income, gain, or loss from the disposition of S stock computed pursuant to paragraph (c)(2)(iii) of this section. The tentative computation of tax imposed is made without regard to whether all or a portion of an excess loss account in a share of S stock is required to be taken into account pursuant to § 1.1502–19(b)(1) and (c)(1)(iii)(B).

(v) *Tentative reduction of attributes.* Fifth, the rules of sections 108 and 1017 and § 1.1502–28 are tentatively applied to reduce the attributes remaining after the tentative computation of tax imposed pursuant to paragraph (c)(2)(iv) of this section.

(vi) *Actual adjustment of stock basis.* Sixth, § 1.1502–32 is applied to reflect the amount of S's income and gain included, and unlimited deductions and losses that are absorbed, in the tentative computation of tax imposed for the year of the disposition (and any prior years) made pursuant to paragraph (c)(2)(iv) of this section, and the excluded COD income applied to reduce attributes and the attributes tentatively reduced in respect of the excluded COD income pursuant to paragraph (c)(2)(v) of this section.

(vii) *Actual computation of stock gain or loss.* Seventh, the group's actual gain or loss on the disposition of S stock (including a disposition that results from the application of § 1.1502–19(c)(1)(iii)(B)) is computed. The result of the computation pursuant to paragraph (c)(2)(vi) of this section is treated as the basis of such stock.

(viii) *Actual computation of tax imposed.* Eighth, the tax imposed by chapter 1 of the Internal Revenue Code for the year of the disposition (and any prior years) is computed. The actual tax imposed on the group for the year of the disposition is computed by applying the limitation computed pursuant to paragraph (c)(2)(i) of this section, and by including the gain or loss recognized on the disposition of S stock computed pursuant to paragraph (c)(2)(vii) of this section. However, attributes that were tentatively used in the computation of tax imposed pursuant to paragraph (c)(2)(iv) of this section and attributes that were tentatively reduced pursuant to paragraph (c)(2)(v) of this section cannot offset any excess loss account taken into account as a result of the application of § 1.1502–19(b)(1) and (c)(1)(iii)(B).

(ix) *Actual reduction of attributes.* Ninth, the rules of sections 108 and 1017 and § 1.1502–28 are actually applied to reduce the attributes remaining after the actual computation of tax imposed pursuant to paragraph (c)(2)(viii) of this section.

(A) *S or a lower-tier corporation realizes excluded COD income.* If S or a lower-tier corporation of S realizes excluded COD income, the aggregate amount of excluded COD income that is applied to reduce attributes attributable to members other than S and any lower-tier corporation of S pursuant to this paragraph (c)(2)(ix) shall not exceed the aggregate amount of excluded COD income that was tentatively applied to reduce attributes attributable to members other than S and any lower-tier corporation of S pursuant to paragraph (c)(2)(v) of this section. The amount of the actual reduction of attributes attributable to S and any lower-tier corporation of S that may be reduced in respect of the excluded COD income of S or a lower-tier corporation of S shall not be so limited.

(B) *A member other than S or a lower-tier corporation realizes excluded COD income.* If a member other than S or a lower-tier corporation of S realizes excluded COD income, the aggregate amount of excluded COD income that is applied to reduce attributes (other than credits) attributable to S and any lower-tier corporation of S pursuant to this paragraph (c)(2)(ix) shall not exceed the aggregate amount of excluded COD income that was tentatively applied to reduce attributes (other than credits) attributable to S and any lower-tier corporation of S pursuant to paragraph (c)(2)(v) of this section. The amount of the actual reduction of attributes attributable to any member other than S and any lower-tier corporation of S that may be reduced in respect of the excluded COD income of S or a lower-tier corporation of S shall not be so limited.

(3) *Special rules.* (i) If the reduction of attributes attributable to a member is prevented as a result of a limitation described in paragraph (c)(2)(ix)(B) of this section, the excluded COD income that would have otherwise been applied to reduce such attributes is applied to reduce the remaining attributes of the same type that are available for reduction under § 1.1502–28(a)(4), on a pro rata basis, prior to reducing attributes of a different type. The reduction of such remaining attributes, however, is subject to any applicable limitation described in paragraph (c)(2)(ix)(B) of this section.

(ii) To the extent S's deductions and losses in the year of disposition (or those of a lower-tier corporation of S) cannot offset income or gain because of the limitation under paragraph (b) of this section or this paragraph (c) and are not reduced pursuant to sections 108 and 1017 and § 1.1502–28, such items are carried to other years under the applicable provisions of the Internal Revenue Code and regulations as if they were the only items incurred by S (or a lower-tier corporation of S) in the year of disposition. For example, to the extent S incurs an operating loss in the year of disposition that is limited and is not reduced pursuant to section 108 and § 1.1502–28, the loss is treated as a separate net operating loss attributable to S arising in that year.

(4) *Definition of lower-tier corporation.* A corporation is a lower-tier corporation of S if all of its items of income, gain, deduction, and loss (including the absorption of deduction or loss and the reduction of attributes other than credits) would be fully reflected in P's basis in S's stock under § 1.1502–32.

(5) *Examples.* For purposes of the examples in this paragraph (c), unless otherwise stated, the tax year of all persons is the calendar year, all persons use the accrual method of accounting, the facts set forth the only corporate activity, all transactions are between unrelated persons, tax liabilities are disregarded, and no election under section 108(b)(5) is made. The principles of this paragraph (c) are illustrated by the following examples:

Example 1. Departing member realizes excluded COD income. (i) *Facts.* P owns all of S's stock with a $90 basis. For Year 1, P has ordinary income of $30, and S has an $80 ordinary loss and $100 of excluded COD income from the discharge of non-intercompany indebtedness. P sells the S stock for $20 at the close of Year 1. As of the beginning of Year 2, S has Asset A with a basis of $0 and a fair market value of $20.

(ii) *Analysis.* The steps used to compute the tax imposed on the group, to effect the reduction of attributes, and to compute the limitations on the use and reduction of attributes are as follows:

(A) *Computation of limitation on deductions and losses to offset income or gain.* To determine the amount of the limitation under paragraph (c)(2)(i) of this section on S's loss

and the effect of the absorption of S's loss on P's basis in S's stock under §1.1502–32(b), P's gain or loss from the disposition of S's stock is not taken into account. The group is tentatively treated as having a consolidated net operating loss of $50 (P's $30 of income minus S's $80 loss). Thus, $30 of S's loss is unlimited and $50 of S's loss is limited under paragraph (c)(2)(i) of this section. Under the principles of §1.1502–21(b)(2)(iv), all of the consolidated net operating loss is attributable to S.

(B) *Tentative adjustment of stock basis.* Then, pursuant to paragraph (c)(2)(ii) of this section, §1.1502–32 is tentatively applied to adjust the basis of S stock. For this purpose, however, adjustments attributable to the excluded COD income and the reduction of attributes in respect thereof are not taken into account. Under §1.1502–32(b), the absorption of $30 of S's loss decreases P's basis in S's stock by $30 to $60.

(C) *Tentative computation of stock gain or loss.* Then, P's income, gain, or loss from the sale of S stock is computed pursuant to paragraph (c)(2)(iii) of this section using the basis computed in the previous step. Thus, P is treated as recognizing a $40 loss from the sale of S stock.

(D) *Tentative computation of tax imposed.* Pursuant to paragraph (c)(2)(iv) of this section, the tax imposed for the year of disposition is then tentatively computed, taking into account P's $40 loss on the sale of the S stock computed pursuant to paragraph (c)(2)(iii) of this section. The group has a $50 consolidated net operating loss for Year 1 that, under the principles of §1.1502–21(b)(2)(iv), is wholly attributable to S and a consolidated capital loss of $40 that, under the principles of §1.1502–21(b)(2)(iv), is wholly attributable to P.

(E) *Tentative reduction of attributes.* Next, pursuant to paragraph (c)(2)(v) of this section, the rules of sections 108 and 1017 and §1.1502–28 are tentatively applied to reduce attributes remaining after the tentative computation of the tax imposed. Pursuant to §1.1502–28(a)(2), the tax attributes attributable to S would first be reduced to take into account its $100 of excluded COD income. Accordingly, the consolidated net operating loss for Year 1 would be reduced by $50, the portion of that consolidated net operating loss attributable to S under the principles of §1.1502–21(b)(2)(iv), to $0. Then, pursuant to §1.1502–28(a)(4), S's remaining $50 of excluded COD income would reduce the consolidated capital loss attributable to P of $40 by $40 to $0. The remaining $10 of excluded COD income would have no effect.

(F) *Actual adjustment of stock basis.* Pursuant to paragraph (c)(2)(vi) of this section, §1.1502–32 is applied to reflect the amount of S's income and gain included, and unlimited deductions and losses that are absorbed, in the tentative computation of the tax imposed for the year of the disposition and the excluded COD income tentatively applied to reduce attributes and the attributes reduced in respect of the excluded COD income pursuant to the previous step. Under §1.1502–32(b), the absorption of $30 of S's loss, the application of $90 of S's excluded COD income to reduce attributes of P and S, and the reduction of the $50 loss attributable to S in respect of the excluded COD income results in a positive adjustment of $10 to P's basis in the S stock. P's basis in the S stock, therefore, is $100.

(G) *Actual computation of stock gain or loss.* Pursuant to paragraph (c)(2)(vii) of this section, P's actual gain or loss on the sale of the S stock is computed using the basis computed in the previous step. Accordingly, P recognizes an $80 loss on the disposition of the S stock.

(H) *Actual computation of tax imposed.* Pursuant to paragraph (c)(2)(viii) of this section, the tax imposed is computed by taking into account P's $80 loss from the sale of S stock. Before the application of §1.1502–28, therefore, the group has a consolidated net operating loss of $50 that is wholly attributable to S under the principles of §1.1502–21(b)(2)(iv), and a consolidated capital loss of $80 that is wholly attributable to P under the principles of §1.1502–21(b)(2)(iv).

(I) *Actual reduction of attributes.* Pursuant to paragraph (c)(2)(ix) of this section, sections 108 and 1017 and §1.1502–28 are then actually applied to reduce attributes remaining after the actual computation of the tax imposed. Pursuant to §1.1502–28(a)(2), the tax attributes attributable to S must first be reduced to take into account its $100 of excluded COD income. Accordingly, the consolidated net operating loss for Year 1 is reduced by $50, the portion of that consolidated net operating loss attributable to S under the principles of §1.1502–21(b)(2)(iv), to $0. Then, pursuant to §1.1502–28(a)(4), S's remaining $50 of excluded COD income reduces consolidated tax attributes. In particular, without regard to the limitation imposed by paragraph (c)(2)(ix)(A) of this section, the $80 consolidated capital loss, which under the principles of §1.1502–21(b)(2)(iv) is attributable to P, would be reduced by $50 from $80 to $30. However, the limitation imposed by paragraph (c)(2)(ix)(A) of this section prevents the reduction of the consolidated capital loss attributable to P by more than $40. Therefore, the consolidated capital loss attributable to P is reduced by only $40 in respect of S's excluded COD income. The remaining $10 of excluded COD income has no effect.

Example 2. Member other than departing member realizes excluded COD income. (i) *Facts.* P owns all of S1's and S2's stock. P's basis in S2's stock is $600. For Year 1, P has ordinary income of $30, S1 has a $100 ordinary loss and $100 of excluded COD income from the discharge of non-intercompany indebtedness,

and S2 has $200 of ordinary loss. P sells the S2 stock for $600 at the close of Year 1. As of the beginning of Year 2, S1 has Asset A with a basis of $0 and a fair market value of $10.

(ii) *Analysis.* The steps used to compute the tax imposed on the group, to effect the reduction of attributes, and to compute the limitations on the use and reduction of attributes are as follows:

(A) *Computation of limitation on deductions and losses to offset income or gain.* To determine the amount of the limitation under paragraph (c)(2)(i) of this section on S2's loss and the effect of the absorption of S2's loss on P's basis in S2's stock under §1.1502–32(b), P's gain or loss from the sale of S2's stock is not taken into account. The group is tentatively treated as having a consolidated net operating loss of $270 (P's $30 of income minus S1's $100 loss and S2's $200 loss). Consequently, $20 of S2's loss from Year 1 is unlimited and $180 of S2's loss from Year 1 is limited under paragraph (c)(2)(i) of this section. Under the principles of §1.1502–21(b)(2)(iv), $90 of the consolidated net operating loss is attributable to S1 and $180 of the consolidated net operating loss is attributable to S2.

(B) *Tentative adjustment of stock basis.* Then, pursuant to paragraph (c)(2)(ii) of this section, §1.1502–32 is tentatively applied to adjust the basis of S2's stock. For this purpose, however, adjustments to the basis of S2's stock attributable to the reduction of attributes in respect of S1's excluded COD income are not taken into account. Under §1.1502–32(b), the absorption of $20 of S2's loss decreases P's basis in S2's stock by $20 to $580.

(C) *Tentative computation of stock gain or loss.* Then, P's income, gain, or loss from the disposition of S2 stock is computed pursuant to paragraph (c)(2)(iii) of this section using the basis computed in the previous step. Thus, P is treated as recognizing a $20 gain from the sale of the S2 stock.

(D) *Tentative computation of tax imposed.* Pursuant to paragraph (c)(2)(iv) of this section, the tax imposed for the year of disposition is then tentatively computed, taking into account P's $20 gain from the sale of S2 stock computed pursuant to paragraph (c)(2)(iii) of this section. Although S2's limited loss cannot be used to offset P's $20 gain from the sale of S2's stock under the rules of this section, S1's loss will offset that gain. Therefore, the group is tentatively treated as having a consolidated net operating loss of $250, $70 of which is attributable to S1 and $180 of which is attributable to S2 under the principles of §1.1502–21(b)(2)(iv).

(E) *Tentative reduction of attributes.* Next, pursuant to paragraph (c)(2)(v) of this section, the rules of sections 108 and 1017 and §1.1502–28 are tentatively applied to reduce attributes remaining after the tentative computation of the tax imposed. Pursuant to §1.1502–28(a)(2), the tax attributes attributable to S1 would first be reduced to take into account its $100 of excluded COD income. Accordingly, the consolidated net operating loss for Year 1 would be reduced by $70, the portion of that consolidated net operating loss attributable to S1 under the principles of §1.1502–21(b)(2)(iv), to $0. Then, pursuant to §1.1502–28(a)(4), S1's remaining $30 of excluded COD income would reduce the consolidated net operating loss for Year 1 attributable to S2 of $180 by $30 to $150.

(F) *Actual adjustment of stock basis.* Pursuant to paragraph (c)(2)(vi) of this section, §1.1502–32 is applied to reflect the amount of S2's income and gain included, and unlimited deductions and losses that are absorbed, in the tentative computation of the tax imposed for the year of the disposition and the excluded COD income tentatively applied to reduce attributes and the attributes reduced in respect of the excluded COD income pursuant to the previous step. Under §1.1502–32(b), the absorption of $20 of S2's loss to offset a portion of P's income and the application of $30 of S1's excluded COD income to reduce attributes attributable to S2 results in a negative adjustment of $50 to P's basis in the S2 stock. P's basis in the S2 stock, therefore, is $550.

(G) *Actual computation of stock gain or loss.* Pursuant to paragraph (c)(2)(vii) of this section, P's actual gain or loss on the sale of the S2 stock is computed using the basis computed in the previous step. Therefore, P recognizes a $50 gain on the disposition of the S2 stock.

(H) *Actual computation of tax imposed.* Pursuant to paragraph (c)(2)(viii) of this section, the tax imposed is computed by taking into account P's $50 gain from the disposition of the S2 stock. Before the application of §1.1502–28, therefore, the group has a consolidated net operating loss of $220, $40 of which is attributable to S1 and $180 of which is attributable to S2 under the principles of §1.1502–21(b)(2)(iv).

(I) *Actual reduction of attributes.* Pursuant to paragraph (c)(2)(ix) of this section, sections 108 and 1017 and §1.1502–28 are then actually applied to reduce attributes remaining after the actual computation of the tax imposed. Pursuant to §1.1502–28(a)(2), the tax attributes attributable to S1 must first be reduced to take into account its $100 of excluded COD income. Accordingly, the consolidated net operating loss for Year 1 is reduced by $40, the portion of that consolidated net operating loss attributable to S1 under the principles of §1.1502–21(b)(2)(iv), to $0. Then, pursuant to §1.1502–28(a)(4), without regard to the limitation imposed by paragraph (c)(2)(ix)(B) of this section, S1's remaining $60 of excluded COD income would reduce S2's net operating loss of $180 to $120. However, the limitation imposed by paragraph (c)(2)(ix)(B) of this section prevents

the reduction of S2's loss by more than $30. Therefore, S2's loss of $180 is reduced by $30 to $150 in respect of S1's excluded COD income. The remaining $30 of excluded COD income has no effect.

Example 3. Lower-tier corporation of departing member realizes excluded COD income. (i) *Facts.* P owns all of S1's stock, S2's stock, and S3's stock. S1 owns all of S4's stock. P's basis in S1's stock is $50 and S1's basis in S4's stock is $50. For Year 1, P has $50 of ordinary loss, S1 has $100 of ordinary loss, S2 has $150 of ordinary loss, S3 has $50 of ordinary loss, and S4 has $50 of ordinary loss and $80 of excluded COD income from the discharge of non-intercompany indebtedness. P sells the S1 stock for $100 at the close of Year 1. As of the beginning of Year 2, S4 has Asset A with a fair market value of $10. After the computation of tax imposed for Year 1 and before the application of sections 108 and 1017 and § 1.1502–28, Asset A has a basis of $0.

(ii) *Analysis.* The steps used to compute the tax imposed on the group, to effect the reduction of attributes, and to compute the limitations on the use and reduction of attributes are as follows:

(A) *Computation of limitation on deductions and losses to offset income or gain.* To determine the amount of the limitation under paragraph (c)(2)(i) of this section on S1's and S4's losses and the effect of the absorption of S1's and S4's losses on P's basis in S1's stock under § 1.1502–32(b), P's gain or loss from the sale of S1's stock is not taken into account. The group is tentatively treated as having a consolidated net operating loss of $400. Consequently, $100 of S1's loss and $50 of S4's loss is limited under paragraph (c)(2)(i) of this section.

(B) *Tentative adjustment of stock basis.* Then, pursuant to paragraph (c)(2)(ii) of this section, § 1.1502–32 is tentatively applied to adjust the basis of S1's stock. For this purpose, adjustments to the basis of S1's stock attributable to S4's realization of excluded COD income and the reduction of attributes in respect of such excluded COD income are not taken into account. There is no adjustment under § 1.1502–32 to the basis of the S1 stock. Therefore, P's basis in the S1 stock for this purpose is $50.

(C) *Tentative computation of stock gain or loss.* Then, P's income, gain, or loss from the sale of S1 stock is computed pursuant to paragraph (c)(2)(iii) of this section using the basis computed in the previous step. Thus, P is treated as recognizing a $50 gain from the sale of the S1 stock.

(D) *Tentative computation of tax imposed.* Pursuant to paragraph (c)(2)(iv) of this section, the tax imposed for the year of disposition is then tentatively computed, taking into account P's $50 gain from the sale of the S1 stock computed pursuant to paragraph (c)(2)(iii) of this section. Although S1's and S4's limited losses cannot be used to offset P's $50 gain from the sale of S1's stock under the rules of this section, $10 of P's loss, $30 of S2's loss, and $10 of S3's loss will offset that gain. Therefore, the group is tentatively treated as having a consolidated net operating loss of $350, $40 of which is attributable to P, $100 of which is attributable to S1, $120 of which is attributable to S2, $40 of which is attributable to S3, and $50 of which is attributable to S4 under the principles of § 1.1502–21(b)(2)(iv).

(E) *Tentative reduction of attributes.* Next, pursuant to paragraph (c)(2)(v) of this section, the rules of sections 108 and 1017 and § 1.1502–28 are tentatively applied to reduce attributes remaining after the tentative computation of the tax imposed. Pursuant to § 1.1502–28(a)(2), the tax attributes attributable to S4 would first be reduced to take into account its $80 of excluded COD income. Accordingly, the consolidated net operating loss for Year 1 would be reduced by $50, the portion of the consolidated net operating loss attributable to S4 under the principles of § 1.1502–21(b)(2)(iv), to $300. Then, pursuant to § 1.1502–28(a)(4), S4's remaining $30 of excluded COD income would reduce the consolidated net operating loss for Year 1 that is attributable to other members. Therefore, the consolidated net operating loss for Year 1 would be reduced by $30. Of that amount, $4 is attributable to P, $10 is attributable to S1, $12 is attributable to S2, and $4 is attributable to S3.

(F) *Actual adjustment of stock basis.* Pursuant to paragraph (c)(2)(vi) of this section, § 1.1502–32 is applied to reflect the amount of S1's and S4's income and gain included, and unlimited deductions and losses that are absorbed, in the tentative computation of tax imposed for the year of the disposition and the excluded COD income tentatively applied to reduce attributes and the attributes reduced in respect of the excluded COD income pursuant to the previous step. Under § 1.1502–32(b), the application of $80 of S4's excluded COD income to reduce attributes, and the reduction of S4's loss in the amount of $50 and S1's loss in the amount of $10 in respect of the excluded COD income results in a positive adjustment of $20 to P's basis in the S1 stock. Accordingly, P's basis in S1 stock is $70.

(G) *Actual computation of stock gain or loss.* Pursuant to paragraph (c)(2)(vii) of this section, P's actual gain or loss on the sale of the S1 stock is computed using the basis computed in the previous step. Accordingly, P recognizes a $30 gain on the disposition of the S1 stock.

(H) *Actual computation of tax imposed.* Pursuant to paragraph (c)(2)(viii) of this section, the tax imposed is computed by taking into account P's $30 gain from the sale of S1 stock. Before the application of § 1.1502–28, therefore, the group has a consolidated net

operating loss of $370, $44 of which is attributable to P, $100 of which is attributable to S1, $132 of which is attributable to S2, $44 of which is attributable to S3, and $50 of which is attributable to S4.

(I) *Actual reduction of attributes.* Pursuant to paragraph (c)(2)(ix) of this section, sections 108 and 1017 and § 1.1502–28 are then actually applied to reduce attributes remaining after the actual computation of the tax imposed. Pursuant to § 1.1502–28(a)(2), the tax attributes attributable to S4 must first be reduced to take into account its $80 of excluded COD income. Accordingly, the consolidated net operating loss for Year 1 is reduced by $50, the portion of that consolidated net operating loss attributable to S4 under the principles of § 1.1502–21(b)(2)(iv), to $320. Then, pursuant to § 1.1502–28(a)(4), without regard to the limitation imposed by paragraph (c)(2)(ix)(A) of this section, S4's remaining $30 of excluded COD income would reduce the consolidated net operating loss for Year 1 by $30 ($4.12 of the consolidated net operating loss attributable to P, $9.38 of the consolidated net operating loss attributable to S1, $12.38 of the consolidated net operating loss attributable to S2, and $4.12 of the consolidated net operating loss attributable to S3) to $290. However, the limitation imposed by paragraph (c)(2)(ix)(A) of this section prevents the reduction of the consolidated net operating loss attributable to P, S2, and S3 by more than $4, $12, and $4 respectively. The $.62 of excluded COD income that would have otherwise reduced the consolidated net operating loss attributable to P, S2, and S3 is applied to reduce the consolidated net operating loss attributable to S1. Therefore, S1 carries forward $90 of loss.

Example 4. Excess loss account taken into account. (i) *Facts.* P is the common parent of a consolidated group. On Day 1 of Year 2, P acquired all of the stock of S1. As of the beginning of Year 2, S1 had a $30 net operating loss carryover from Year 1, a separate return limitation year. A limitation under § 1.1502–21(c) applies to the use of that loss by the P group. For Years 1 and 2, the P group had no consolidated taxable income or loss. On Day 1 of Year 3, S1 acquired all of the stock of S2 for $10. In Year 3, P had ordinary income of $10, S1 had ordinary income of $25, and S2 had an ordinary loss of $50. In addition, in Year 3, S2 realized $20 of excluded COD income from the discharge of non-intercompany indebtedness. After the discharge of this indebtedness, S2 had no liabilities. As of the beginning of Year 4, S2 had Asset A with a fair market value of $10. After the computation of tax imposed for Year 3 and before the application of sections 108 and 1017 and § 1.1502–28, Asset A has a basis of $0. S2 had no taxable income (or loss) for Year 1 and Year 2.

(ii) *Analysis.* The steps used to compute the tax imposed on the group, to effect the reduction of attributes, and to compute the limitations on the use and reduction of attributes are as follows:

(A) *Computation of limitation on deductions and losses to offset income or gain, tentative basis adjustments, tentative computation of stock gain or loss.* Because it is not initially apparent that there has been a disposition of stock, paragraph (c)(2)(i) of this section does not limit the use of deductions to offset income or gain, no adjustments to the basis are required pursuant to paragraph (c)(2)(ii) of this section, and no stock gain or loss is computed pursuant to paragraph (c)(2)(iii) of this section or taken into account in the tentative computation of tax imposed pursuant to paragraph (c)(2)(iv) of this section.

(B) *Tentative computation of tax imposed.* Pursuant to paragraph (c)(2)(iv) of this section, the tax imposed for Year 3 is tentatively computed. For Year 3, the P group has a consolidated taxable loss of $15, all of which is attributable to S2 under the principles of § 1.1502–21(b)(2)(iv).

(C) *Tentative reduction of attributes.* Next, pursuant to paragraph (c)(2)(v) of this section, the rules of sections 108 and 1017 and § 1.1502–28 are tentatively applied to reduce attributes remaining after the tentative computation of tax imposed. Pursuant to § 1.1502–28(a)(2), the tax attributes attributable to S2 would first be reduced to take into account its $20 of excluded COD income. Accordingly, the consolidated net operating loss for Year 3 is reduced by $15, the portion of that consolidated net operating loss attributable to S2 under the principles of § 1.1502–21(b)(2)(iv), to $0. The remaining $5 of excluded COD income is not applied to reduce attributes as there are no remaining attributes that are subject to reduction.

(D) *Actual adjustment of stock basis.* Pursuant to paragraph (c)(2)(vi) of this section, § 1.1502–32 is applied to reflect the amount of S2's income and gain included, and unlimited deductions and losses that are absorbed, in the tentative computation of tax imposed for the year of the disposition and the excluded COD income tentatively applied to reduce attributes and the attributes reduced in respect of the excluded COD income pursuant to the previous step. Under § 1.1502–32, the absorption of $35 of S2's loss, the application of $15 in respect of S2's excluded COD income to reduce attributes, and the reduction of $15 in respect of the loss attributable to S2 reduced in respect of the excluded COD income results in a negative adjustment of $35 to the basis of the S2 stock. Therefore, S1 has an excess loss account of $25 in the S2 stock.

(E) *Actual computation of stock gain or loss.* Pursuant to paragraph (c)(2)(vii) of this section, S1's actual gain or loss, if any, on the S2 stock is computed. Because S2 realized $5 of excluded COD income that was not applied to reduce attributes, pursuant to § 1.1502–19(b)(1) and (c)(1)(iii)(B), S1 is required to

take into account $5 of its excess loss account in the S2 stock.

(F) *Actual computation of tax imposed.* Pursuant to paragraph (c)(2)(viii) of this section, the tax imposed is computed by taking into account the $5 of the excess loss account in the S2 stock required to be taken into account. See §1.1502–28(b)(6) (requiring an excess loss account that is required to be taken into account as a result of the application of §1.1502–19(c)(1)(iii)(B) to be included in the group's tax return for the year that includes the date of the debt discharge). However, pursuant to paragraph (c)(2)(viii) of this section, such amount may not be offset by any of the consolidated net operating loss attributable to S2. It may, however, subject to applicable limitations, be offset by the separate net operating loss of S1 from Year 1.

(G) *Actual reduction of attributes.* Pursuant to paragraph (c)(2)(ix) of this section, sections 108 and 1017 and §1.1502–28 are then actually applied to reduce attributes remaining after the actual computation of the tax imposed. Attributes will be actually reduced in the same way that they were tentatively reduced.

(6) *Additional rules for multiple dispositions.* [Reserved]

(7) *Effective date.* This paragraph (c) applies to dispositions of subsidiary stock that occur after March 22, 2005. Taxpayers may apply §1.1502–11(c) of REG–167265–03 (2004–15 IRB 730) (see §601.601(d)(2) of this chapter) in whole, but not in part, to any disposition of subsidiary stock that occurs on or before March 22, 2005, if a member of the group realized excluded COD income after August 29, 2003, in the taxable year that includes the date of the disposition of such subsidiary stock.

(d) *Disallowance of loss attributable to pre-1966 distributions.* No loss shall be allowed upon the sale or other disposition of stock, bonds, or other obligations of a member or former member to the extent that such loss is attributable to a distribution made in an affiliated year beginning before January 1, 1966, out of earnings and profits accumulated before the distributing corporation became a member.

[T.D. 7246, 38 FR 759, Jan. 4, 1973]

EDITORIAL NOTE: For FEDERAL REGISTER citations affecting §1.1502–11, see the List of CFR Sections Affected, which appears in the Finding Aids section of the printed volume and at *www.fdsys.gov*.

COMPUTATION OF SEPARATE TAXABLE INCOME

§ 1.1502–12 Separate taxable income.

The separate taxable income of a member (including a case in which deductions exceed gross income) is computed in accordance with the provisions of the Code covering the determination of taxable income of separate corporations, subject to the following modifications:

(a) Transactions between members and transactions with respect to stock, bonds, or other obligations of members shall be reflected according to the provisions of §1.1502–13;

(b) Any deduction which is disallowed under §§1.1502–15A or 1.1502–15 shall be taken into account as provided in those sections;

(c) The limitation on deductions provided in section 615(c) or section 617(h) shall be taken into account as provided in §1.1502–16;

(d) The method of accounting under which such computation is made and the adjustments to be made because of any change in method of accounting shall be determined under §1.1502–17;

(e) Inventory adjustments shall be made as provided in §1.1502–18;

(f) Any amount included in income under §1.1502–19 shall be taken into account;

(g) In the computation of the deduction under section 167, property shall not lose its character as new property as a result of a transfer from one member to another member during a consolidated return year if:

(1) The transfer occurs on or before January 4, 1973, or

(2) The transfer occurs after January 4, 1973, and the transfer is an intercompany transaction as defined in §1.1502–13 or the basis of the property in the hands of the transferee is determined (in whole or in part) by reference to its basis in the hands of the transferor;

(h) No net operating loss deduction shall be taken into account;

(i) [Reserved]

(j) No capital gains or losses shall be taken into account;

(k) No gains and losses subject to section 1231 shall be taken into account;

(l) No deduction under section 170 with respect to charitable contributions shall be taken into account;

(m) No deduction under section 922 (relating to the deduction for Western Hemisphere trade corporations) shall be taken into account;

(n) No deductions under section 243(a)(1), 244(a), 245, or 247 (relating to deductions with respect to dividends received and dividends paid) shall be taken into account;

(o) Basis shall be determined under §§ 1.1502–31 and 1.1502–32, and earnings and profits shall be determined under § 1.1502–33; and

(p) The limitation on deductions provided in section 613A shall be taken into account for each member's oil and gas properties as provided in § 1.1502–44.

(q) A thrift institution's deduction under section 593(b)(2) (relating to the addition to the reserve for bad debts of a thrift institution under the percentage of taxable income method) shall be determined under § 1.1502–42.

(r) *See* §§ 1.337(d)–2, 1.1502–35, and 1.1502–36 for rules relating to basis adjustments and allowance of stock loss on dispositions or transfers of subsidiary stock.

(Secs. 1502 and 7805 of the Internal Revenue Code of 1954 (68A Stat. 637; 917; 26 U.S.C. 1502, 7805))

[T.D. 6894, 31 FR 11794, Sept. 8, 1966]

EDITORIAL NOTE: For FEDERAL REGISTER citations affecting § 1.1502–12, see the List of CFR Sections Affected, which appears in the Finding Aids section of the printed volume and at *www.fdsys.gov*.

§ 1.1502–13 Intercompany transactions.

(a) *In general*—(1) *Purpose*. This section provides rules for taking into account items of income, gain, deduction, and loss of members from intercompany transactions. The purpose of this section is to provide rules to clearly reflect the taxable income (and tax liability) of the group as a whole by preventing intercompany transactions from creating, accelerating, avoiding, or deferring consolidated taxable income (or consolidated tax liability).

(2) *Separate entity and single entity treatment*. Under this section, the selling member (S) and the buying member (B) are treated as separate entities for some purposes but as divisions of a single corporation for other purposes. The *amount* and *location* of S's intercompany items and B's corresponding items are determined on a separate entity basis (separate entity treatment). For example, S determines its gain or loss from a sale of property to B on a separate entity basis, and B has a cost basis in the property. The *timing*, and the *character*, *source*, and other *attributes* of the intercompany items and corresponding items, although initially determined on a separate entity basis, are redetermined under this section to produce the effect of transactions between divisions of a single corporation (single entity treatment). For example, if S sells land to B at a gain and B sells the land to a nonmember, S does not take its gain into account until B's sale to the nonmember.

(3) *Timing rules as a method of accounting*—(i) *In general*. The timing rules of this section are a method of accounting for intercompany transactions, to be applied by each member in addition to the member's other methods of accounting. *See* § 1.1502–17 and, with regard to consolidated return years beginning on or after November 7, 2001, § 1.446–1(c)(2)(iii). To the extent the timing rules of this section are inconsistent with a member's otherwise applicable methods of accounting, the timing rules of this section control. For example, if S sells property to B in exchange for B's note, the timing rules of this section apply instead of the installment sale rules of section 453. S's or B's application of the timing rules of this section to an intercompany transaction clearly reflects income only if the effect of that transaction as a whole (including, for example, related costs and expenses) on consolidated taxable income is clearly reflected.

(ii) *Automatic consent for joining and departing members*—(A) *Consent granted*. Section 446(e) consent is granted under this section to the extent a change in method of accounting is necessary solely by reason of the timing rules of this section—

(*1*) For each member, with respect to its intercompany transactions, in the first consolidated return year which follows a separate return year and in which the member engages in an intercompany transaction; and

(*2*) For each former member, with respect to its transactions with members that would otherwise be intercompany transactions if the former member were still a member, in the first separate return year in which the former member engages in such a transaction.

(B) *Cut-off basis*. Any change in method of accounting described in paragraph (a)(3)(ii)(A) of this section is to be effected on a cut-off basis for transactions entered into on or after the first day of the year for which consent is granted under paragraph (a)(3)(ii)(A) of this section.

(4) *Application of other rules of law*. See §1.1502–80(a) regarding the general applicability of other rules of law and a limitation on duplicative adjustments. The rules of this section apply in addition to other applicable law (including nonstatutory authorities). For example, this section applies in addition to sections 267(f) (additional rules for certain losses), 269 (acquisitions to evade or avoid income tax), and 482 (allocations among commonly controlled taxpayers). Thus, an item taken into account under this section can be deferred, disallowed, or eliminated under other applicable law, for example, section 1091 (losses from wash sales).

(5) *References*. References in other sections to this section include, as appropriate, references to prior law. For effective dates and prior law see paragraph (l) of this section.

(6) *Overview*—(i) *In general*. The principal rules of this section that implement single entity treatment are the matching rule and the acceleration rule of paragraphs (c) and (d) of this section. Under the matching rule, S and B are generally treated as divisions of a single corporation for purposes of taking into account their items from intercompany transactions. The acceleration rule provides additional rules for taking the items into account if the effect of treating S and B as divisions cannot be achieved (for example, if S or B becomes a nonmember). Paragraph (b) of this section provides definitions. Paragraph (e) of this section provides simplifying rules for certain transactions. Paragraphs (f) and (g) of this section provide additional rules for stock and obligations of members. Paragraphs (h) and (j) of this section provide anti-avoidance rules and miscellaneous operating rules.

(ii) *Table of examples*. Set forth below is a table of the examples contained in this section.

Matching rule. (§1.1502–13(c)(7)(ii))

Example 1. Intercompany sale of land.
Example 2. Dealer activities.
Example 3. Intercompany section 351 transfer.
Example 4. Depreciable property.
Example 5. Intercompany sale followed by installment sale.
Example 6. Intercompany sale of installment obligation.
Example 7. Performance of services.
Example 8. Rental of property.
Example 9. Intercompany sale of a partnership interest.
Example 10. Net operating losses subject to section 382 or the SRLY rules.
Example 11. Section 475.
Example 12. Section 1092.
Example 13. [Reserved]
Example 14. Source of income under section 863.
Example 15. Section 1248.
Example 16. Intercompany stock distribution followed by section 332 liquidation.
Example 17. Intercompany stock sale followed by section 355 distribution.

Acceleration rule. (§1.1502–13(d)(3))

Example 1. Becoming a nonmember—timing.
Example 2. Becoming a nonmember—attributes.
Example 3. Selling member's disposition of installment note.
Example 4. Cancellation of debt and attribute reduction under section 108(b).
Example 5. Section 481.

Simplifying rules—inventory. (§1.1502–13(e)(1)(v))

Example 1. Increment averaging method.
Example 2. Increment valuation method.
Example 3. Other reasonable inventory methods.

Stock of members. (§1.1502–13(f)(7))

Example 1. Dividend exclusion and property distribution.
Example 2. Excess loss accounts.
Example 3. Intercompany reorganizations.
Example 4. All cash intercompany reorganization under section 368(a)(1)(D).
Example 5. Stock redemptions and distributions.
Example 6. Intercompany stock sale followed by section 332 liquidation.
Example 7. Intercompany stock sale followed by section 355 distribution.

Obligations of members. (§ 1.1502–13(g)(7)(ii))

Example 1. Interest on intercompany obligation.
Example 2. Intercompany obligation becomes nonintercompany obligation.
Example 3. Loss or bad debt deduction with respect to intercompany obligation.
Example 4. Intercompany nonrecognition transactions.
Example 5. Assumption of intercompany obligation.
Example 6. Extinguishment of intercompany obligation.
Example 7. Exchange of intercompany obligations.
Example 8. Tax benefit rule.
Example 9. Issuance at off-market rate of interest.
Example 10. Nonintercompany obligation becomes intercompany obligation.
Example 11. Notional principal contracts.

Anti-avoidance rules. (§ 1.1502–13(h)(2))

Example 1. Sale of a partnership interest.
Example 2. Transitory status as an intercompany obligation.
Example 3. Corporate mixing bowl.
Example 4. Partnership mixing bowl.
Example 5. Sale and leaseback.

Miscellaneous operating rules. (§ 1.1502–13(j)(9))

Example 1. Intercompany sale followed by section 351 transfer to member.
Example 2. Intercompany sale of member stock followed by recapitalization.
Example 3. Back-to-back intercompany transactions—matching.
Example 4. Back-to-back intercompany transactions—acceleration.
Example 5. Successor group.
Example 6. Liquidation—80% distributee.
Example 7. Liquidation—no 80% distributee.

(b) *Definitions.* For purposes of this section—

(1) *Intercompany transactions*—(i) *In general.* An intercompany transaction is a transaction between corporations that are members of the same consolidated group immediately after the transaction. S is the member transferring property or providing services, and B is the member receiving the property or services. Intercompany transactions include—

(A) S's sale of property (or other transfer, such as an exchange or contribution) to B, whether or not gain or loss is recognized;

(B) S's performance of services for B, and B's payment or accrual of its expenditure for S's performance;

(C) S's licensing of technology, rental of property, or loan of money to B, and B's payment or accrual of its expenditure; and

(D) S's distribution to B with respect to S stock.

(ii) *Time of transaction.* If a transaction occurs in part while S and B are members and in part while they are not members, the transaction is treated as occurring when performance by either S or B takes place, or when payment for performance would be taken into account under the rules of this section if it were an intercompany transaction, whichever is earliest. Appropriate adjustments must be made in such cases by, for example, dividing the transaction into two separate transactions reflecting the extent to which S or B has performed.

(iii) *Separate transactions.* Except as otherwise provided in this section, each transaction is analyzed separately. For example, if S simultaneously sells two properties to B, one at a gain and the other at a loss, each property is treated as sold in a separate transaction. Thus, the gain and loss cannot be offset or netted against each other for purposes of this section. Similarly, each payment or accrual of interest on a loan is a separate transaction. In addition, an accrual of premium is treated as a separate transaction, or as an offset to interest that is not a separate transaction, to the extent required under separate entity treatment. If two members exchange property, each member is S with respect to the property it transfers and B with respect to the property it receives. If two members enter into a notional principal contract, each payment under the contract is a separate transaction and the member making the payment is B with respect to that payment and the member receiving the payment is S. See paragraph (j)(4) of this section for rules aggregating certain transactions.

(2) *Intercompany items*—(i) *In general.* S's income, gain, deduction, and loss from an intercompany transaction are its intercompany items. For example, S's gain from the sale of property to B is intercompany gain. An item is an intercompany item whether it is directly or indirectly from an intercompany transaction.

(ii) *Related costs or expenses.* S's costs or expenses related to an intercompany transaction are included in determining its intercompany items. For example, if S sells inventory to B, S's direct and indirect costs properly includible under section 263A are included in determining its intercompany income. Similarly, related costs or expenses that are not capitalized under S's separate entity method of accounting are included in determining its intercompany items. For example, deductions for employee wages, in addition to other related costs, are included in determining S's intercompany items from performing services for B, and depreciation deductions are included in determining S's intercompany items from renting property to B.

(iii) *Amounts not yet recognized or incurred.* S's intercompany items include amounts from an intercompany transaction that are not yet taken into account under its separate entity method of accounting. For example, if S is a cash method taxpayer, S's intercompany income might be taken into account under this section even if the cash is not yet received. Similarly, an amount reflected in basis (or an amount equivalent to basis) under S's separate entity method of accounting that is a substitute for income, gain, deduction or loss from an intercompany transaction is an intercompany item.

(3) *Corresponding items*—(i) *In general.* B's income, gain, deduction, and loss from an intercompany transaction, or from property acquired in an intercompany transaction, are its corresponding items. For example, if B pays rent to S, B's deduction for the rent is a corresponding deduction. If B buys property from S and sells it to a nonmember, B's gain or loss from the sale to the nonmember is a corresponding gain or loss; alternatively, if B recovers the cost of the property through depreciation, B's depreciation deductions are corresponding deductions. An item is a corresponding item whether it is directly or indirectly from an intercompany transaction (or from property acquired in an intercompany transaction).

(ii) *Disallowed or eliminated amounts.* B's corresponding items include amounts that are permanently disallowed or permanently eliminated, whether directly or indirectly. Thus, corresponding items include amounts disallowed under section 265 (expenses relating to tax-exempt income), and amounts not recognized under section 311(a) (nonrecognition of loss on distributions), section 332 (nonrecognition on liquidating distributions), or section 355(c) (certain distributions of stock of a subsidiary). On the other hand, an amount is not permanently disallowed or permanently eliminated (and therefore is not a corresponding item) to the extent it is not recognized in a transaction in which B receives a successor asset within the meaning of paragraph (j)(1) of this section. For example, B's corresponding items do not include amounts not recognized from a transaction with a nonmember to which section 1031 applies or from another transaction in which B receives exchanged basis property.

(4) *Recomputed corresponding items.* The recomputed corresponding item is the corresponding item that B would take into account if S and B were divisions of a single corporation and the intercompany transaction were between those divisions. For example, if S sells property with a $70 basis to B for $100, and B later sells the property to a nonmember for $90, B's corresponding item is its $10 loss, and the recomputed corresponding item is $20 of gain (determined by comparing the $90 sales price with the $70 basis the property would have if S and B were divisions of a single corporation). Although neither S nor B actually takes the recomputed corresponding item into account, it is computed as if B did take it into account (based on reasonable and consistently applied assumptions, including any provision of the Internal Revenue Code or regulations that would affect its timing or attributes).

(5) *Treatment as a separate entity.* Treatment as a separate entity means treatment without application of the rules of this section, but with the application of the other consolidated return regulations. For example, if S sells the stock of another member to B, S's gain or loss on a separate entity

basis is determined with the application of §1.1502–80(b) (non-applicability of section 304), but without redetermination under paragraph (c) or (d) of this section.

(6) *Attributes*. The attributes of an intercompany item or corresponding item are all of the item's characteristics, except *amount*, *location*, and *timing*, necessary to determine the item's effect on taxable income (and tax liability). For example, attributes include character, source, treatment as excluded from gross income or as a noncapital, nondeductible amount, and treatment as built-in gain or loss under section 382(h) or 384. In contrast, the characteristics of property, such as a member's holding period, or the fact that property is included in inventory, are not attributes of an item, but these characteristics might affect the determination of the attributes of items from the property.

(c) *Matching rule*. For each consolidated return year, B's corresponding items and S's intercompany items are taken into account under the following rules:

(1) *Attributes and holding periods*—(i) *Attributes*. The separate entity attributes of S's intercompany items and B's corresponding items are redetermined to the extent necessary to produce the same effect on consolidated taxable income (and consolidated tax liability) as if S and B were divisions of a single corporation, and the intercompany transaction were a transaction between divisions. Thus, the activities of both S and B might affect the attributes of both intercompany items and corresponding items. For example, if S holds property for sale to unrelated customers in the ordinary course of its trade or business, S sells the property to B at a gain and B sells the property to an unrelated person at a further gain, S's intercompany gain and B's corresponding gain might be ordinary because of S's activities with respect to the property. Similar principles apply if S performs services, rents property, or engages in any other intercompany transaction.

(ii) *Holding periods*. The holding period of property transferred in an intercompany transaction is the aggregate of the holding periods of S and B. However, if the basis of the property is determined by reference to the basis of other property, the property's holding period is determined by reference to the holding period of the other property. For example, if S distributes stock to B in a transaction to which section 355 applies, B's holding period in the distributed stock is determined by reference to B's holding period in the stock of S.

(2) *Timing*—(i) *B's items*. B takes its corresponding items into account under its accounting method, but the redetermination of the attributes of a corresponding item might affect its timing. For example, if B's sale of property acquired from S is treated as a dealer disposition because of S's activities, section 453(b) prevents any corresponding income of B from being taken into account under the installment method.

(ii) *S's items*. S takes its intercompany item into account to reflect the difference for the year between B's corresponding item taken into account and the recomputed corresponding item.

(3) *Divisions of a single corporation*. As divisions of a single corporation, S and B are treated as engaging in their actual transaction and owning any actual property involved in the transaction (rather than treating the transaction as not occurring). For example, S's sale of land held for investment to B for cash is not disregarded, but is treated as an exchange of land for cash between divisions (and B therefore succeeds to S's basis in the property). Similarly, S's issuance of its own stock to B in exchange for property is not disregarded, B is treated as owning the stock it receives in the exchange, and section 1032 does not apply to B on its subsequent sale of the S stock. Although treated as divisions, S and B nevertheless are treated as:

(i) Operating separate trades or businesses. See, e.g., §1.446–1(d) (accounting methods for a taxpayer engaged in more than one business).

(ii) Having any special status that they have under the Internal Revenue Code or regulations. For example, a bank defined in section 581, a domestic building and loan association defined in section 7701(a)(19), and an insurance

company to which section 801 or 831 applies are treated as divisions having separate special status. On the other hand, the fact that a member holds property for sale to customers in the ordinary course of its trade or business is not a special status.

(4) *Conflict or allocation of attributes.* This paragraph (c)(4) provides special rules for redetermining and allocating attributes under paragraph (c)(1)(i) of this section.

(i) *Offsetting amounts*—(A) *In general.* To the extent B's corresponding item offsets S's intercompany item in amount, the attributes of B's corresponding item, determined based on both S's and B's activities, control the attributes of S's offsetting intercompany item. For example, if S sells depreciable property to B at a gain and B depreciates the property, the attributes of B's depreciation deduction (ordinary deduction) control the attributes of S's offsetting intercompany gain. Accordingly, S's gain is ordinary.

(B) *B controls unreasonable.* To the extent the results under paragraph (c)(4)(i)(A) are inconsistent with treating S and B as divisions of a single corporation, the attributes of the offsetting items must be redetermined in a manner consistent with treating S and B as divisions of a single corporation. To the extent, however, that B's corresponding item on a separate entity basis is excluded from gross income, is a noncapital, nondeductible amount, or is otherwise permanently disallowed or eliminated, the attributes of B's corresponding item always control the attributes of S's offsetting intercompany item.

(ii) *Allocation.* To the extent S's intercompany item and B's corresponding item do not offset in amount, the attributes redetermined under paragraph (c)(1)(i) of this section must be allocated to S's intercompany item and B's corresponding item by using a method that is reasonable in light of all the facts and circumstances, including the purposes of this section and any other rule affected by the attributes of S's intercompany item and B's corresponding item. A method of allocation or redetermination is unreasonable if it is not used consistently by all members of the group from year to year.

(5) *Special status.* Notwithstanding the general rule of paragraph (c)(1)(i) of this section, to the extent an item's attributes determined under this section are permitted or not permitted to a member under the Internal Revenue Code or regulations by reason of the member's special status, the attributes required under the Internal Revenue Code or regulations apply to that member's items (but not the other member). For example, if S is a bank to which section 582(c) applies, and sells debt securities at a gain to B, a nonbank, the character of S's intercompany gain is ordinary as required under section 582(c), but the character of B's corresponding item as capital or ordinary is determined under paragraph (c)(1)(i) of this section without the application of section 582(c). For other special status issues, see, for example, sections 595(b) (foreclosure on property securing loans), 818(b) (life insurance company treatment of capital gains and losses), and 1503(c) (limitation on absorption of certain losses).

(6) *Treatment of intercompany items if corresponding items are excluded or nondeductible*—(i) *In general.* Under paragraph (c)(1)(i) of this section, S's intercompany item might be redetermined to be excluded from gross income or treated as a noncapital, nondeductible amount. For example, S's intercompany loss from the sale of property to B is treated as a noncapital, nondeductible amount if B distributes the property to a nonmember shareholder at no further gain or loss (because, if S and B were divisions of a single corporation, the loss would not have been recognized under section 311(a)). Paragraph (c)(6)(ii) of this section, however, provides limitations on the application of this rule to intercompany income or gain. See also §§ 1.1502–32 and 1.1502–33 (adjustments to S's stock basis and earnings and profits to reflect amounts so treated).

(ii) *Limitation on treatment of intercompany items as excluded from gross income.* Notwithstanding the general rule of paragraph (c)(1)(i) of this section, S's

intercompany income or gain is redetermined to be excluded from gross income only to the extent one of the following applies:

(A) *Disallowed amounts.* B's corresponding item is a deduction or loss and, in the taxable year the item is taken into account under this section, it is permanently and explicitly disallowed under another provision of the Internal Revenue Code or regulations. For example, deductions that are disallowed under section 265 are permanently and explicitly disallowed. An amount is not permanently and explicitly disallowed, for example, to the extent that—

(*1*) The Internal Revenue Code or regulations provide that the amount is not recognized (for example, a loss that is realized but not recognized under section 332 or section 355(c) is not permanently and explicitly disallowed, notwithstanding that it is a corresponding item within the meaning of paragraph (b)(3)(ii) of this section (certain disallowed or eliminated amounts));

(*2*) A related amount might be taken into account by B with respect to successor property, such as under section 280B (demolition costs recoverable as capitalized amounts);

(*3*) A related amount might be taken into account by another taxpayer, such as under section 267(d) (disallowed loss under section 267(a) might result in nonrecognition of gain for a related person);

(*4*) A related amount might be taken into account as a deduction or loss, including as a carryforward to a later year, under any provision of the Internal Revenue Code or regulations (whether or not the carryforward expires in a later year); or

(*5*) The amount is reflected in the computation of any credit against (or other reduction of) Federal income tax (whether allowed for the taxable year or carried forward to a later year).

(B) *Section 311.* The corresponding item is a loss that is realized, but not recognized under section 311(a) on a distribution to a nonmember (even though the loss is not a permanently and explicitly disallowed amount within the meaning of paragraph (c)(6)(ii)(A) of this section).

(C) *Certain intercompany gains on stock*—(*1*) *In general.* Notwithstanding paragraph (c)(6)(ii)(A)(*1*) of this section, intercompany gain with respect to a member's stock that was created by reason of an intercompany transfer of the stock, and that would not otherwise be taken into account upon a subsequent elimination of the stock's basis but for the transfer, is redetermined to be excluded from gross income if—

(*i*) B or S becomes a successor (as defined in paragraph (j)(2) of this section) to the other party (either B or S), or a third member becomes a successor to both B and S;

(*ii*) Immediately before the intercompany gain would be taken into account, the successor member holds the member's stock with respect to which the intercompany gain was realized;

(*iii*) The successor member's basis in the member's stock that reflects the intercompany gain that is taken into account is eliminated without the recognition of gain or loss (and such eliminated basis is not further reflected in the basis of any successor asset);

(*iv*) The effects of the intercompany transaction have not previously been reflected, directly or indirectly, on the group's consolidated return; and

(*v*) The group has not derived, and no taxpayer will derive, any Federal income tax benefit from the intercompany transaction that gave rise to the intercompany gain or the redetermination of the intercompany gain (including any adjustment to basis in member stock under §1.1502–32). For this purpose, the redetermination of the intercompany gain is not itself considered a Federal income tax benefit.

(*2*) *Effect on earnings and profits and investment adjustments.* Any amount excluded from gross income under paragraph (c)(6)(ii)(C)(*1*) of this section shall not be taken into account as earnings and profits of any member and shall not be treated as tax-exempt income under §1.1502–32(b)(2)(ii).

(D) *Other amounts.* (*1*) The Commissioner may determine that treating S's intercompany item as excluded from gross income is consistent with the

purposes of this section and other applicable provisions of the Internal Revenue Code, regulations, and published guidance, if the following conditions are met, depending on whether the intercompany item is an item of income or an item of gain:

(*2*) A determination by the Commissioner may be obtained only through a letter ruling request.

(7) *Examples*—(i) *In general*. For purposes of the examples in this section, unless otherwise stated, P is the common parent of the P consolidated group, P owns all of the only class of stock of subsidiaries S and B, X is a person unrelated to any member of the P group, the taxable year of all persons is the calendar year, all persons use the accrual method of accounting, tax liabilities are disregarded, the facts set forth the only corporate activity, no member has any special status, and the transaction is not otherwise subject to recharacterization. If a member acts as both a selling member and a buying member (e.g., with respect to different aspects of a single transaction, or with respect to related transactions), the member is referred to as M, M1, or M2 (rather than as S or B).

(ii) *Matching rule*. The matching rule of this paragraph (c) is illustrated by the following examples.

Example 1. Intercompany sale of land followed by sale to a nonmember. (a) *Facts*. S holds land for investment with a basis of $70. S has held the land for more than one year. On January 1 of Year 1, S sells the land to B for $100. B also holds the land for investment. On July 1 of Year 3, B sells the land to X for $110.

(b) *Definitions*. Under paragraph (b)(1) of this section, S's sale of the land to B is an intercompany transaction, S is the selling member, and B is the buying member. Under paragraphs (b)(2) and (3) of this section, S's $30 gain from the sale to B is its intercompany item, and B's $10 gain from the sale to X is its corresponding item.

(c) *Attributes*. Under the matching rule of paragraph (c) of this section, S's $30 intercompany gain and B's $10 corresponding gain are taken into account to produce the same effect on consolidated taxable income (and consolidated tax liability) as if S and B were divisions of a single corporation. In addition, the holding periods of S and B for the land are aggregated. Thus, the group's entire $40 of gain is long-term capital gain. Because both S's intercompany item and B's corresponding item on a separate entity basis are long-term capital gain, the attributes are not redetermined under paragraph (c)(1)(i) of this section.

(d) *Timing*. For each consolidated return year, S takes its intercompany item into account under the matching rule to reflect the difference for the year between B's corresponding item taken into account and the recomputed corresponding item. If S and B were divisions of a single corporation and the intercompany sale were a transfer between the divisions, B would succeed to S's $70 basis in the land and would have a $40 gain from the sale to X in Year 3, instead of a $10 gain. Consequently, S takes no gain into account in Years 1 and 2, and takes the entire $30 gain into account in Year 3, to reflect the $30 difference in that year between the $10 gain B takes into account and the $40 recomputed gain (the recomputed corresponding item). Under §§1.1502–32 and 1.1502–33, P's basis in its S stock and the earnings and profits of S and P do not reflect S's $30 gain until the gain is taken into account in Year 3. (Under paragraph (a)(3) of this section, the results would be the same if S sold the land to B in an installment sale to which section 453 would otherwise apply, because S must take its intercompany gain into account under this section.)

(e) *Intercompany loss followed by sale to a nonmember at a gain*. The facts are the same as in paragraph (a) of this *Example 1*, except that S's basis in the land is $130 (rather than $70). The attributes and timing of S's intercompany loss and B's corresponding gain are determined under the matching rule in the manner provided in paragraphs (c) and (d) of this *Example 1*. If S and B were divisions of a single corporation and the intercompany sale were a transfer between the divisions, B would succeed to S's $130 basis in the land and would have a $20 loss from the sale to X instead of a $10 gain. Thus, S takes its entire $30 loss into account in Year 3 to reflect the $30 difference between B's $10 gain taken into account and the $20 recomputed loss. (The results are the same under section 267(f).) S's $30 loss is long-term capital loss, and B's $10 gain is long-term capital gain.

(f) *Intercompany gain followed by sale to a nonmember at a loss*. The facts are the same as in paragraph (a) of this *Example 1*, except that B sells the land to X for $90 (rather than $110). The attributes and timing of S's intercompany gain and B's corresponding loss are determined under the matching rule. If S and B were divisions of a single corporation and the intercompany sale were a transfer between the divisions, B would succeed to S's $70 basis in the land and would have a $20 gain from the sale to X instead of a $10 loss. Thus, S takes its entire $30 gain into account in Year 3 to reflect the $30 difference between B's $10 loss taken into account and the $20 recomputed gain. S's $30 gain is long-

term capital gain, and B's $10 loss is long-term capital loss.

(g) *Intercompany gain followed by distribution to a nonmember at a loss.* The facts are the same as in paragraph (a) of this *Example 1,* except that B distributes the land to X, a minority shareholder of B, and at the time of the distribution the land has a fair market value of $90. The attributes and timing of S's intercompany gain and B's corresponding loss are determined under the matching rule. Under section 311(a), B does not recognize its $10 loss on the distribution to X. If S and B were divisions of a single corporation and the intercompany sale were a transfer between divisions, B would succeed to S's $70 basis in the land and would have a $20 gain from the distribution to X instead of an unrecognized $10 loss. Under paragraph (b)(3)(ii) of this section, B's loss that is not recognized under section 311(a) is a corresponding item. Thus, S takes its $30 gain into account under the matching rule in Year 3 to reflect the difference between B's $10 corresponding unrecognized loss and the $20 recomputed gain. B's $10 corresponding loss offsets $10 of S's intercompany gain and, under paragraph (c)(4)(i) of this section, the attributes of B's corresponding item control the attributes of S's intercompany item. Paragraph (c)(6) of this section does not prevent the redetermination of S's intercompany item as excluded from gross income. (See paragraph (c)(6)(ii)(B) of this section). Thus, $10 of S's $30 gain is redetermined to be excluded from gross income.

(h) *Intercompany sale followed by section 1031 exchange with nonmember.* The facts are the same as in paragraph (a) of this *Example 1,* except that, instead of selling the land to X, B exchanges the land for land owned by X in a transaction to which section 1031 applies. There is no difference in Year 3 between B's $0 corresponding item taken into account and the $0 recomputed corresponding item. Thus, none of S's intercompany gain is taken into account under the matching rule as a result of the section 1031 exchange. Instead, B's gain is preserved in the land received from X and, under the successor asset rule of paragraph (j)(1) of this section, S's intercompany gain is taken into account by reference to the replacement property. (If B takes gain into account as a result of boot received in the exchange, S's intercompany gain is taken into account under the matching rule to the extent the boot causes a difference between B's gain taken into account and the recomputed gain.)

(i) *Intercompany sale followed by section 351 transfer to nonmember.* The facts are the same as in paragraph (a) of this *Example 1,* except that, instead of selling the land to X, B transfers the land to X in a transaction to which section 351(a) applies and X remains a nonmember. There is no difference in Year 3 between B's $0 corresponding item taken into account and the $0 recomputed corresponding item. Thus, none of S's intercompany gain is taken into account under the matching rule as a result of the section 351(a) transfer. However, S's entire gain is taken into account in Year 3 under the acceleration rule of paragraph (d) of this section (because X, a nonmember, reflects B's $100 cost basis in the land under section 362).

Example 2. Dealer activities. (a) *Facts.* S holds land for investment with a basis of $70. On January 1 of Year 1, S sells the land to B for $100. B develops the land as residential real estate, and sells developed lots to customers during Year 3 for an aggregate amount of $110.

(b) *Attributes.* S and B are treated under the matching rule as divisions of a single corporation for purposes of determining the attributes of S's intercompany item and B's corresponding item. Thus, although S held the land for investment, whether the gain is treated as from the sale of property described in section 1221(1) is based on the activities of both S and B. If, based on both S's and B's activities, the land is described in section 1221(1), both S's gain and B's gain are ordinary income.

Example 3. Intercompany section 351 transfer. (a) *Facts.* S holds land with a $70 basis and a $100 fair market value for sale to customers in the ordinary course of business. On January 1 of Year 1, S transfers the land to B in exchange for all of the stock of B in a transaction to which section 351 applies. S has no gain or loss under section 351(a), and its basis in the B stock is $70 under section 358. Under section 362, B's basis in the land is $70. B holds the land for investment. On July 1 of Year 3, B sells the land to X for $100. Assume that if S and B were divisions of a single corporation, B's gain from the sale would be ordinary income because of S's activities.

(b) *Timing and attributes.* Under paragraph (b)(1) of this section, S's transfer to B is an intercompany transaction. Under paragraph (c)(3) of this section, S is treated as transferring the land in exchange for B's stock even though, as divisions, S could not own stock of B. S has no intercompany item, but B's $30 gain from its sale of the land to X is a corresponding item because the land was acquired in an intercompany transaction. B's $30 gain is ordinary income that is taken into account under B's method of accounting.

(c) *Intercompany section 351 transfer with boot.* The facts are the same as in paragraph (a) of this *Example 3,* except that S receives $10 cash in addition to the B stock in the transfer. S recognizes $10 of gain under section 351(b), and its basis in the B stock is $70 under section 358. Under section 362, B's basis in the land is $80. S takes its $10 intercompany gain into account in Year 3 to reflect the $10 difference between B's $20 corresponding gain taken into account and the

$30 recomputed gain. Both S's $10 gain and B's $20 gain are ordinary income.

(d) *Partial disposition.* The facts are the same as in paragraph (c) of this *Example 3*, except B sells only a one- half, undivided interest in the land to X for $50. The timing and attributes are determined in the manner provided in paragraph (b) of this *Example 3*, except that S takes only $5 of its gain into account in Year 3 to reflect the $5 difference between B's $10 gain taken into account and the $15 recomputed gain.

Example 4. Depreciable property. (a) *Facts.* On January 1 of Year 1, S buys 10-year recovery property for $100 and depreciates it under the straight-line method. On January 1 of Year 3, S sells the property to B for $130. Under section 168(i)(7), B is treated as S for purposes of section 168 to the extent B's $130 basis does not exceed S's adjusted basis at the time of the sale. B's additional basis is treated as new 10-year recovery property for which B elects the straight-line method of recovery. (To simplify the example, the half-year convention is disregarded.)

(b) *Depreciation through Year 3; intercompany gain.* S claims $10 of depreciation for each of Years 1 and 2 and has an $80 basis at the time of the sale to B. Thus, S has a $50 intercompany gain from its sale to B. For Year 3, B has $10 of depreciation with respect to $80 of its basis (the portion of its $130 basis not exceeding S's adjusted basis). In addition, B has $5 of depreciation with respect to the $50 of its additional basis that exceeds S's adjusted basis.

(c) *Timing.* S's $50 gain is taken into account to reflect the difference for each consolidated return year between B's depreciation taken into account with respect to the property and the recomputed depreciation. For Year 3, B takes $15 of depreciation into account. If the intercompany transaction were a transfer between divisions of a single corporation, B would succeed to S's adjusted basis in the property and take into account only $10 of depreciation for Year 3. Thus, S takes $5 of gain into account in Year 3. In each subsequent year that B takes into account $15 of depreciation with respect to the property, S takes into account $5 of gain.

(d) *Attributes.* Under paragraph (c)(1)(i) of this section, the attributes of S's gain and B's depreciation must be redetermined to the extent necessary to produce the same effect on consolidated taxable income as if the intercompany transaction were between divisions of a single corporation (the group must have a net depreciation deduction of $10). In each year, $5 of B's corresponding depreciation deduction offsets S's $5 intercompany gain taken into account and, under paragraph (c)(4)(i) of this section, the attributes of B's corresponding item control the attributes of S's intercompany item. Accordingly, S's intercompany gain that is taken into account as a result of B's depreciation deduction is ordinary income.

(e) *Sale of property to a nonmember.* The facts are the same as in paragraph (a) of this *Example 4*, except that B sells the property to X on January 1 of Year 5 for $110. As set forth in paragraphs (c) and (d) of this *Example 4*, B has $15 of depreciation with respect to the property in each of Years 3 and 4, causing S to take $5 of intercompany gain into account in each year as ordinary income. The $40 balance of S's intercompany gain is taken into account in Year 5 as a result of B's sale to X, to reflect the $40 difference between B's $10 gain taken into account and the $50 of recomputed gain ($110 of sale proceeds minus the $60 basis B would have if the intercompany sale were a transfer between divisions of a single corporation). Treating S and B as divisions of a single corporation, $40 of the gain is section 1245 gain and $10 is section 1231 gain. On a separate entity basis, S would have more than $10 treated as section 1231 gain, and B would have no amount treated as section 1231 gain. Under paragraph (c)(4)(ii) of this section, all $10 of the section 1231 gain is allocated to S. S's remaining $30 of gain, and all of B's $10 gain, is treated as section 1245 gain.

Example 5. Intercompany sale followed by installment sale. (a) *Facts.* S holds land for investment with a basis of $70x. On January 1 of Year 1, S sells the land to B for $100x. B also holds the land for investment. On July 1 of Year 3, B sells the land to X in exchange for X's $110x note. The note bears a market rate of interest in excess of the applicable Federal rate, and provides for principal payments of $55x in Year 4 and $55x in Year 5. The interest charge under section 453A(c) applies to X's note.

(b) *Timing and attributes.* S takes its $30x gain into account to reflect the difference in each consolidated return year between B's gain taken into account for the year and the recomputed gain. Under section 453, B takes into account $5x of gain in Year 4 and $5x of gain in Year 5. Thus, S takes into account $15x of gain in Year 4 and $15x of gain in Year 5 to reflect the $15x difference in each of those years between B's $5x gain taken into account and the $20x recomputed gain. Both S's $30x gain and B's $10x gain are subject to the section 453A(c) interest charge beginning in Year 3.

(c) *Election out under section 453(d).* If, under the facts in paragraph (a) of this *Example 5*, the P group wishes to elect not to apply section 453 with respect to S's gain, an election under section 453(d) must be made for Year 3 with respect to B's gain. This election will cause B's $10x gain to be taken into account in Year 3. Under the matching rule, this will result in S's $30x gain being taken into account in Year 3. (An election by the P group solely with respect to S's gain has no effect because the gain from S's sale to B is

taken into account under the matching rule, and therefore must reflect the difference between B's gain taken into account and the recomputed gain.)

(d) *Sale to a nonmember at a loss, but overall gain.* The facts are the same as in paragraph (a) of this *Example 5*, except that B sells the land to X in exchange for X's $90x note (rather than $110x note). If S and B were divisions of a single corporation, B would succeed to S's basis in the land, and the sale to X would be eligible for installment reporting under section 453, because it resulted in an overall gain. However, because only gains may be reported on the installment method, B's $10x corresponding loss is taken into account in Year 3. Under paragraph (b)(4) of this section the recomputed corresponding item is $20x gain that would be taken into account under the installment method, $0 in Year 3 and $10x in each of Years 4 and 5. Thus, in Year 3 S takes $10x of gain into account to reflect the difference between B's $10x loss taken into account and the $0 recomputed gain for Year 3. Under paragraph (c)(4)(i) of this section, B's $10x corresponding loss offsets $10x of S's intercompany gain, and B's attributes control. S takes $10x of gain into account in each of Years 4 and 5 to reflect the difference in those years between B's $0 gain taken into account and the $10x recomputed gain that would be taken into account under the installment method. Only the $20x of S's gain taken into account in Years 4 and 5 is subject to the interest charge under section 453A(c) beginning in Year 3. (If P elects under section 453(d) for Year 3 not to apply section 453 with respect to the gain, all of S's $30x gain will be taken into account in Year 3 to reflect the difference between B's $10x loss taken into account and the $20x recomputed gain.)

(e) *Intercompany loss, installment gain.* The facts are the same as in paragraph (a) of this *Example 5*, except that S has a $130x (rather than $70x) basis in the land. Under paragraph (c)(1)(i) of this section, the separate entity attributes of S's and B's items from the intercompany transaction must be redetermined to produce the same effect on consolidated taxable income (and tax liability) as if the transaction had been a transfer between divisions. If S and B were divisions of a single corporation, B would succeed to S's basis in the land and the group would have $20x loss from the sale to X, installment reporting would be unavailable, and the interest charge under section 453A(c) would not apply. Accordingly, B's gain from the transaction is not eligible for installment treatment under section 453. B takes its $10x gain into account in Year 3, and S takes its $30x of loss into account in Year 3 to reflect the difference between B's $10x gain and the $20x recomputed loss.

(f) *Recapture income.* The facts are the same as in paragraph (a) of this *Example 5*, except that S bought depreciable property (rather than land) for $100x, claimed depreciation deductions, and reduced the property's basis to $70x before Year 1. (To simplify the example, B's depreciation is disregarded.) If the intercompany sale of property had been a transfer between divisions of a single corporation, $30x of the $40x gain from the sale to X would be section 1245 gain (which is ineligible for installment reporting) and $10x would be section 1231 gain (which is eligible for installment reporting). On a separate entity basis, S would have $30x of section 1245 gain and B would have $10x of section 1231 gain. Accordingly, the attributes are not redetermined under paragraph (c)(1)(i) of this section. All of B's $10x gain is eligible for installment reporting and is taken into account $5x each in Years 4 and 5 (and is subject to the interest charge under section 453A(c)). S's $30x gain is taken into account in Year 3 to reflect the difference between B's $0 gain taken into account and the $30x of recomputed gain. (If S had bought the depreciable property for $110x and its recomputed basis under section 1245 had been $110x (rather than $100x), B's $10x gain and S's $30x gain would both be recapture income ineligible for installment reporting.)

Example 6. Intercompany sale of installment obligation. (a) *Facts.* S holds land for investment with a basis of $70x. On January 1 of Year 1, S sells the land to X in exchange for X's $100x note, and S reports its gain on the installment method under section 453. X's note bears interest at a market rate of interest in excess of the applicable Federal rate, and provides for principal payments of $50x in Year 5 and $50x in Year 6. Section 453A applies to X's note. On July 1 of Year 3, S sells X's note to B for $100x, resulting in $30x gain from S's prior sale of the land to X under section 453B(a).

(b) *Timing and attributes.* S's sale of X's note to B is an intercompany transaction, and S's $30x gain is intercompany gain. S takes $15x of the gain into account in each of Years 5 and 6 to reflect the $15x difference in each year between B's $0 gain taken into account and the $15x recomputed gain. S's gain continues to be treated as its gain from the sale to X, and the deferred tax liability remains subject to the interest charge under section 453A(c).

(c) *Worthlessness.* The facts are the same as in paragraph (a) of this *Example 6*, except that X's note becomes worthless on December 1 of Year 3 and B has a $100x short-term capital loss under section 165(g) on a separate entity basis. Under paragraph (c)(1)(ii) of this section, B's holding period for X's note is aggregated with S's holding period. Thus, B's loss is a long- term capital loss. S takes its $30x gain into account in Year 3 to reflect the $30x difference between B's $100x

loss taken into account and the $70x recomputed loss. Under paragraph (c)(1)(i) of this section, S's gain is long-term capital gain.

(d) *Pledge*. The facts are the same as in paragraph (a) of this *Example 6*, except that, on December 1 of Year 3, B borrows $100x from an unrelated bank and secures the indebtedness with X's note. X's note remains subject to section 453A(d) following the sale to B. Under section 453A(d), B's $100x of proceeds from the secured indebtedness is treated as an amount received on December 1 of Year 3 by B on X's note. Thus, S takes its entire $30x gain into account in Year 3.

Example 7. Performance of services. (a) *Facts*. S is a driller of water wells. B operates a ranch in a remote location, and B's taxable income from the ranch is not subject to section 447. B's ranch requires water to maintain its cattle. During Year 1, S drills an artesian well on B's ranch in exchange for $100 from B, and S incurs $80 of expenses (e.g., for employees and equipment). B capitalizes its $100 cost for the well under section 263, and takes into account $10 of cost recovery deductions in each of Years 2 through 11. Under its separate entity method of accounting, S would take its income and expenses into account in Year 1. If S and B were divisions of a single corporation, the costs incurred in drilling the well would be capitalized.

(b) *Definitions*. Under paragraph (b)(1) of this section, the service transaction is an intercompany transaction, S is the selling member, and B is the buying member. Under paragraph (b)(2)(ii) of this section, S's $100 of income and $80 of related expenses are both included in determining its intercompany income of $20.

(c) *Timing and attributes*. S's $20 of intercompany income is taken into account under the matching rule to reflect the $20 difference between B's corresponding items taken into account (based on its $100 cost basis in the well) and the recomputed corresponding items (based on the $80 basis that B would have if S and B were divisions of a single corporation and B's basis were determined by reference to S's $80 of expenses). In Year 1, S takes into account $80 of its income and the $80 of expenses. In each of Years 2 through 11, S takes $2 of its $20 intercompany income into account to reflect the annual $2 difference between B's $10 of cost recovery deductions taken into account and the $8 of recomputed cost recovery deductions. S's $100 income and $80 expenses, and B's cost recovery deductions, are ordinary items (because S's and B's items would be ordinary on a separate entity basis, the attributes are not redetermined under paragraph (c)(1)(i) of this section). If S's offsetting $80 of income and expense would not be taken into account in the same year under its separate entity method of accounting, they nevertheless must be taken into account under this section in a manner that clearly reflects consolidated taxable income. See paragraph (a)(3)(i) of this section.

(d) *Sale of capitalized services*. The facts are the same as in paragraph (a) of this *Example 7*, except that B sells the ranch before Year 11 and recognizes gain attributable to the well. To the extent of S's income taken into account as a result of B's cost recovery deductions, as well as S's offsetting $80 of income and expense, the timing and attributes are determined in the manner provided in paragraph (c) of this *Example 7*. The attributes of the remainder of S's $20 of income and B's gain from the sale are redetermined to produce the same effect on consolidated taxable income as if S and B were divisions of a single corporation. Accordingly, S's remaining intercompany income is treated as recapture income or section 1231 gain, even though it is from S's performance of services.

Example 8. Rental of property. B operates a ranch that requires grazing land for its cattle. S owns undeveloped land adjoining B's ranch. On January 1 of Year 1, S leases grazing rights to B for Year 1. B's $100 rent expense is deductible for Year 1 under its separate entity accounting method. Under paragraph (b)(1) of this section, the rental transaction is an intercompany transaction, S is the selling member, and B is the buying member. S takes its $100 of income into account in Year 1 to reflect the $100 difference between B's rental deduction taken into account and the $0 recomputed rental deduction. S's income and B's deduction are ordinary items (because S's intercompany item and B's corresponding item would both be ordinary on a separate entity basis, the attributes are not redetermined under paragraph (c)(1)(i) of this section).

Example 9. Intercompany sale of a partnership interest. (a) *Facts*. S owns a 20% interest in the capital and profits of a general partnership. The partnership holds land for investment with a basis equal to its value, and operates depreciable assets which have value in excess of basis. S's basis in its partnership interest equals its share of the adjusted basis of the partnership's land and depreciable assets. The partnership has an election under section 754 in effect. On January 1 of Year 1, S sells its partnership interest to B at a gain. During Years 1 through 10, the partnership depreciates the operating assets, and B's depreciation deductions from the partnership reflect the increase in the basis of the depreciable assets under section 743(b).

(b) *Timing and attributes*. S's gain is taken into account during Years 1 through 10 to reflect the difference in each year between B's depreciation deductions from the partnership taken into account and the recomputed depreciation deductions from the partnership. Under paragraphs (c)(1)(i) and (c)(4)(i) of this section, S's gain taken into account is ordinary income. (The acceleration rule

does not apply to S's gain as a result of the section 743(b) adjustment, because the adjustment is solely with respect to B and therefore no nonmember reflects any part of the intercompany transaction.)

(c) *Partnership sale of assets.* The facts are the same as in paragraph (a) of this *Example 9*, and the partnership sells some of its depreciable assets to X at a gain on December 31 of Year 4. In addition to the intercompany gain taken into account as a result of the partnership's depreciation, S takes intercompany gain into account in Year 4 to reflect the difference between B's partnership items taken into account from the sale (which reflect the basis increase under section 743(b)) and the recomputed partnership items. The attributes of S's additional gain are redetermined to produce the same effect on consolidated taxable income as if S and B were divisions of a single corporation (recapture income or section 1231 gain).

(d) *B's sale of partnership interest.* The facts are the same as in paragraph (a) of this *Example 9*, and on December 31 of Year 4, B sells its partnership interest to X at no gain or loss. In addition to the intercompany gain taken into account as a result of the partnership's depreciation, the remaining balance of S's intercompany gain is taken into account in Year 4 to reflect the difference between B's $0 gain taken into account from the sale of the partnership interest and the recomputed gain. The character of S's remaining intercompany item and B's corresponding item are determined on a separate entity basis under section 751, and then redetermined to the extent necessary to produce the same effect as treating the intercompany transaction as occurring between divisions of a single corporation.

(e) *No section 754 election.* The facts are the same as in paragraph (d) of this *Example 9*, except that the partnership does not have a section 754 election in effect, and B recognizes a capital loss from its sale of the partnership interest to X on December 31 of Year 4. Because there is no difference between B's depreciation deductions from the partnership taken into account and the recomputed depreciation deductions, S does not take any of its gain into account during Years 1 through 4 as a result of B's partnership's items. Instead, S's entire intercompany gain is taken into account in Year 4 to reflect the difference between B's loss taken into account from the sale to X and the recomputed gain or loss.

Example 10. Net operating losses subject to section 382 or the SRLY rules. (a) *Facts.* On January 1 of Year 1, P buys all of S's stock. S has net operating loss carryovers from prior years. P's acquisition results in an ownership change under section 382 with respect to S's loss carryovers, and S has a net unrealized built-in gain (within the meaning of section 382(h)(3)). S owns nondepreciable property with a $70 basis and $100 value. On July 1 of Year 3, S sells the property to B for $100, and its $30 gain is recognized built-in gain (within the meaning of section 382(h)(2)) on a separate entity basis. On December 1 of Year 5, B sells the property to X for $90.

(b) *Timing and attributes.* S's $30 gain is taken into account in Year 5 to reflect the $30 difference between B's $10 loss taken into account and the recomputed $20 gain. S and B are treated as divisions of a single corporation for purposes of applying section 382 in connection with the intercompany transaction. Under a single entity analysis, the single corporation has losses subject to limitation under section 382, and this limitation may be increased under section 382(h) if the single corporation has recognized built-in gain with respect to those losses. B's $10 corresponding loss offsets $10 of S's intercompany gain, and thus, under paragraph (c)(4)(i) of this section, $10 of S's intercompany gain is redetermined not to be recognized built-in gain. S's remaining $20 intercompany gain continues to be treated as recognized built-in gain.

(c) *B's recognized built-in gain.* The facts are the same as in paragraph (a) of this *Example 10*, except that the property declines in value after S becomes a member of the P group, S sells the property to B for its $70 basis, and B sells the property to X for $90 during Year 5. Treating S and B as divisions of a single corporation, S's sale to B does not cause the property to cease to be built-in gain property. Thus, B's $20 gain from its sale to X is recognized built-in gain that increases the section 382 limitation applicable to S's losses.

(d) *SRLY limitation.* The facts are the same as in paragraph (a) of this *Example 10*, except that P's acquisition of S is not subject to the overlap rule of § 1.1502–21(g), and S's net operating loss carryovers are subject to the separate return limitation year (SRLY) rules. See § 1.1502–21(c). The application of the SRLY rules depends on S's status as a separate corporation having losses from separate return limitation years. Under paragraph (c)(5), the attribute of S's intercompany item as it relates to S's SRLY limitation is not redetermined, because the SRLY limitation depends on S's special status. Accordingly, S's $30 intercompany gain is included in determining its SRLY limitation for Year 5.

Example 11. Section 475. (a) *Facts.* S, a dealer in securities within the meaning of section 475(c), owns a security with a basis of $70. The security is held for sale to customers and is not identified under section 475(b) as within an exception to marking to market. On July 1 of Year 1, S sells the security to B for $100. B is not a dealer and holds the security for investment. On December 31 of Year 1, the fair market value of the security is $100. On July 1 of Year 2, B sells the security to X for $110.

(b) *Attributes*. Under section 475, a dealer in securities can treat a security as within an exception to marking to market under section 475(b) only if it timely identifies the security as so described. Under the matching rule, attributes must be redetermined by treating S and B as divisions of a single corporation. As a result of S's activities, the single corporation is treated as a dealer with respect to securities, and B must continue to mark to market the security acquired from S. Thus, B's corresponding items and the recomputed corresponding items are determined by continuing to treat the security as not within an exception to marking to market. Under section 475(d)(3), it is possible for the character of S's intercompany items to differ from the character of B's corresponding items.

(c) *Timing and character*. S has a $30 gain when it disposes of the security by selling it to B. This gain is intercompany gain that is taken into account in Year 1 to reflect the $30 difference between B's $0 gain taken into account from marking the security to market under section 475 and the recomputed $30 gain that would be taken into account. The character of S's gain and B's gain are redetermined as if the security were transferred between divisions. Accordingly, S's gain is ordinary income under section 475(d)(3)(A)(i), but under section 475(d)(3)(B)(ii) B's $10 gain from its sale to X is capital gain that is taken into account in Year 2.

(d) *Nondealer to dealer*. The facts are the same as in paragraph (a) of this Example 11, except that S is not a dealer and holds the security for investment with a $70 basis, B is a dealer to which section 475 applies and, immediately after acquiring the security from S for $100, B holds the security for sale to customers in the ordinary course of its trade or business. Because S is not a dealer and held the security for investment, the security is treated as properly identified as held for investment under section 475(b)(1) until it is sold to B. Under section 475(b)(3), the security thereafter ceases to be described in section 475(b)(1) because B holds the security for sale to customers. The mark-to-market requirement applies only to changes in the value of the security after B's acquisition. B's mark-to-market gain taken into account and the recomputed mark-to-market gain are both determined based on changes from the $100 value of the security at the time of B's acquisition. There is no difference between B's $0 mark-to-market gain taken into account in Year 1 and the $0 recomputed mark-to-market gain. Therefore, none of S's gain is taken into account in Year 1 as a result of B's marking the security to market in Year 1. In Year 2, B has a $10 gain when it disposes of the security by selling it to X, but would have had a $40 gain if S and B were divisions of a single corporation. Thus, S takes its $30 gain into account in Year 2 under the matching rule. Under section 475(d)(3), S's gain is capital gain even though B's subsequent gain or loss from marking to market or disposing of the security is ordinary gain or loss. If B disposes of the security at a $10 loss in Year 2, S's gain taken into account in Year 2 is still capital because on a single entity basis section 475(d)(3) would provide for $30 of capital gain and $10 of ordinary loss. Because the attributes are not redetermined under paragraph (c)(1)(i) of this section, paragraph (c)(4)(i) of this section does not apply. Furthermore, if B held the security for investment, and so identified the security under section 475(b)(1), the security would continue to be excepted from marking to market.

Example 12. Section 1092. (a) *Facts*. On July 1 of Year 1, S enters into offsetting long and short positions with respect to actively traded personal property. The positions are not section 1256 contracts, and they are the only positions taken into account for purposes of applying section 1092. On August 1 of Year 1, S sells the long position to B at an $11 loss, and there is $11 of unrealized gain in the offsetting short position. On December 1 of Year 1, B sells the long position to X at no gain or loss. On December 31 of Year 1, there is still $11 of unrealized gain in the short position. On February 1 of Year 2, S closes the short position at an $11 gain.

(b) *Timing and attributes*. If the sale from S to B were a transfer between divisions of a single corporation, the $11 loss on the sale to X would have been deferred under section 1092(a)(1)(A). Accordingly, there is no difference in Year 1 between B's corresponding item of $0 and the recomputed corresponding item of $0. S takes its $11 loss into account in Year 2 to reflect the difference between B's corresponding item of $0 taken into account in Year 2 and the recomputed loss of $11 that would have been taken into account in Year 2 under section 1092(a)(1)(B) if S and B had been divisions of a single corporation. (The results are the same under section 267(f)).

Example 13. [Reserved]

Example 14. Source of income under section 863. (a) *Intercompany sale with no independent factory price*. S manufactures inventory in the United States, and recognizes $75 of income on sales to B in Year 1. B distributes the inventory in Country Y and recognizes $25 of income on sales to X, also in Year 1. Title passes from S to B, and from B to X, in Country Y. There is no independent factory price (as defined in regulations under section 863) for the sale from S to B. Under the matching rule, S's $75 intercompany income and B's $25 corresponding income are taken into account in Year 1. In determining the source of income, S and B are treated as divisions of a single corporation, and section 863 applies as if $100 of income were recognized

from producing in the United States and selling in Country Y. Assume that applying the section 863 regulations on a single entity basis, $50 is treated as foreign source income and $50 as U.S. source income. Assume further that on a separate entity basis, S would have $37.50 of foreign source income and $37.50 of U.S. source income, and that all of B's $25 of income would be foreign source income. Thus, on a separate entity basis, S and B would have $62.50 of combined foreign source income and $37.50 of U.S. source income. Accordingly, under single entity treatment, $12.50 that would be treated as foreign source income on a separate entity basis is redetermined to be U.S. source income. Under paragraph (c)(1)(i) of this section, attributes are redetermined only to the extent of the $12.50 necessary to achieve the same effect as a single entity determination. Under paragraph (c)(4)(ii) of this section, the redetermined attribute must be allocated between S and B using a reasonable method. For example, it may be reasonable to recharacterize only S's foreign source income as U.S. source income because only S would have any U.S. source income on a separate entity basis. However, it may also be reasonable to allocate the redetermined attribute between S and B in proportion to their separate entity amounts of foreign source income (in a 3:2 ratio, so that $7.50 of S's foreign source income is redetermined to be U.S. source and $5 of B's foreign source income is redetermined to be U.S. source), provided the same method is applied to all similar transactions within the group.

(b) *Intercompany sale with independent factory price*. The facts are the same as in paragraph (a) of this *Example 14*, except that an independent factory price exists for the sale by S to B such that $70 of S's $75 of income is attributable to the production function. Assume that on a single entity basis, $70 is treated as U.S. source income (because of the existence of the independent factory price) and $30 is treated as foreign source income. Assume that on a separate entity basis, $70 of S's income would be treated as U.S. source, $5 of S's income would be treated as foreign source income, and all of B's $25 income would be treated as foreign source income. Because the results are the same on a single entity basis and a separate entity basis, the attributes are not redetermined under paragraph (c)(1)(i) of this section.

(c) *Sale of property reflecting intercompany services or intangibles*. S earns $10 of income performing services in the United States for B. B capitalizes S's fees into the basis of property that it manufactures in the United States and sells to an unrelated person in Year 1 at a $90 profit, with title passing in Country Y. Under the matching rule, S's $10 income and B's $90 income are taken into account in Year 1. In determining the source of income, S and B are treated as divisions of a single corporation, and section 863 applies as if $100 were earned from manufacturing in the United States and selling in Country Y. Assume that on a single entity basis $50 is treated as foreign source income and $50 is treated as U.S. source income. Assume that on a separate entity basis, S would have $10 of U.S. source income, and B would have $45 of foreign source income and $45 of U.S. source income. Accordingly, under single entity treatment, $5 of income that would be treated as U.S. source income on a separate entity basis is redetermined to be foreign source income. Under paragraph (c)(1)(i) of this section, attributes are redetermined only to the extent of the $5 necessary to achieve the same effect as a single entity determination. Under paragraph (c)(4)(ii) of this section, the redetermined attribute must be allocated between S and B using a reasonable method. (If instead of performing services, S licensed an intangible to B and earned $10 that would be treated as U.S. source income on a separate entity basis, the results would be the same.)

Example 15. Section 1248. (a) *Facts*. On January 1 of Year 1, S forms FT, a wholly owned foreign subsidiary, with a $10 contribution. During Years 1 through 3, FT has earnings and profits of $40. None of the earnings and profits is taxed as subpart F income under section 951, and FT distributes no dividends to S during this period. On January 1 of Year 4, S sells its FT stock to B for $50. While B owns FT, FT has a deficit in earnings and profits of $10. On July 1 of Year 6, B sells its FT stock for $70 to X, an unrelated foreign corporation.

(b) *Timing*. S's $40 of intercompany gain is taken into account in Year 6 to reflect the difference between B's $20 of gain taken into account and the $60 recomputed gain.

(c) *Attributes*. Under the matching rule, the attributes of S's intercompany gain and B's corresponding gain are redetermined to have the same effect on consolidated taxable income (and consolidated tax liability) as if S and B were divisions of a single corporation. On a single entity basis, there is $60 of gain and the portion which is characterized as a dividend under section 1248 is determined on the basis of FT's $30 of earnings and profits at the time of the sale of FT to X (the sum of FT's $40 of earnings and profits while held by S and FT's $10 deficit in earnings and profits while held by B). Therefore, $30 of the $60 gain is treated as a dividend under section 1248. The remaining $30 is treated as capital gain. On a separate entity basis, all of S's $40 gain would be treated as a dividend under section 1248 and all of B's $20 gain would be treated as capital gain. Thus, as a result of the single entity determination, $10 that would be treated as a dividend under

section 1248 on a separate entity basis is redetermined to be capital gain. Under paragraph (c)(4)(ii) of this section, this redetermined attribute must be allocated between S's intercompany item and B's corresponding item by using a reasonable method. On a separate entity basis, only S would have any amount treated as a dividend under section 1248 available for redetermination. Accordingly, $10 of S's income is redetermined to be not subject to section 1248, with the result that $30 of S's intercompany gain is treated as a dividend and the remaining $10 is treated as capital gain. All of B's corresponding gain is treated as capital gain, as it would be on a separate entity basis.

(d) *B has loss.* The facts are the same as in paragraph (a) of this *Example 15,* except that FT has no earnings and profits or deficit in earnings and profits while B owns FT, and B sells the FT stock to X for $40. On a single entity basis, there is $30 of gain, and section 1248 is applied on the basis of FT's $40 earnings and profits at the time of the sale of FT to X. Under section 1248, the amount treated as a dividend is limited to $30 (the amount of the gain). On a separate entity basis, S's entire $40 gain would be treated as a dividend under section 1248, and B's $10 loss would be a capital loss. B's $10 corresponding loss offsets $10 of S's intercompany gain and, under paragraph (c)(4)(i) of this section, the attributes of B's corresponding item control. Accordingly, $10 of S's gain must be redetermined to be capital gain. B's $10 loss remains a capital loss. (If, however, S sold FT to B at a loss and B sold FT to X at a gain, it may be unreasonable for the attributes of B's corresponding gain to control S's offsetting intercompany loss. If B's attributes were to control, for example, the group could possibly claim a larger foreign tax credit than would be available if S and B were divisions of a single corporation.)

Example 16. Intercompany stock distribution followed by section 332 liquidation. (a) *Facts.* P owns all of the stock of S, S owns all the stock of T, a member of the P group, and T owns all of the stock of T1, also a member of the P group. On January 1 of Year 1, S distributes all of the T stock to P in a distribution to which section 301 applies. At the time of this distribution, the value of the T stock is $100 and S has a $40 basis in the T stock. Under section 311(b), the distribution creates $60 of intercompany gain to S. Under section 301(d), P's basis in the T stock is $100. S will take its $60 intercompany gain into account under the matching rule. On January 1 of Year 4, in an independent transaction, S distributes all of its assets to P in a complete liquidation to which section 332 applies, and, under paragraph (j)(2) of this section, P succeeds to S's $60 gain. On January 1 of Year 7, T distributes all of its T1 stock to P in a transaction to which section 355 applies. At the time of this distribution, P has a basis in the T stock of $100, the value of the T stock (without regard to T1) is $75, and the value of the T1 stock is $25. Under section 358, P allocates $25 of its $100 basis in the T stock to the T1 stock, and, under paragraph (j)(1) of this section, the T1 stock becomes a successor asset to the T stock. On January 1 of Year 9, in an independent transaction, T distributes all of its assets to P in a complete liquidation to which section 332 applies.

(b) *Analysis.* Under paragraphs (b)(1) and (f)(2) of this section, S's distribution in Year 1 of the T stock to P is an intercompany transaction, S is the selling member, and P is the buying member. In Year 9 when T liquidates, P has no gain or loss under section 332. Under paragraph (b)(3)(ii) of this section, P's $0 gain or loss with respect to the T stock under section 332 is a corresponding item. P takes $45 (75/100 × $60) of its intercompany gain into account under the matching rule in Year 9 to reflect the difference between P's $0 of unrecognized gain and P's $45 of recomputed unrecognized gain. (If P and S were divisions of a single corporation, P would have had a $40 basis in the T stock, and, after the Year 7 distribution of the T1 stock, would have held the T stock with a $30 basis.) However, paragraph (c)(6) of this section does not prevent the redetermination of P's intercompany gain as excluded from gross income provided P succeeds to S's intercompany item; P and S are a single entity; P's basis in the T stock that reflects the $45 intercompany gain taken into account is eliminated without the recognition of gain or loss (and this eliminated basis is not further reflected in the basis of any successor asset); the group has not derived and no taxpayer will derive any Federal income tax benefit from the basis in the T stock and will not derive any Federal income tax benefit from a redetermination of this portion of the gain; and the effects of the intercompany transaction have not previously been reflected, directly or indirectly, on the P group's consolidated return. (See paragraph (c)(6)(ii)(C) of this section.) Accordingly, under paragraph (c)(6)(ii)(C) of this section, the $45 intercompany gain that P takes into account is redetermined to be excluded from gross income. P's basis in its T1 stock continues to reflect $15 of intercompany gain.

Example 17. Intercompany stock sale followed by section 355 distribution. (a) *Facts.* The facts are the same as *Example 16,* except that T does not distribute the stock of T1, instead, in Year 7, T makes a distribution of $50 to P in a transaction to which section 301 applies. Under § 1.1502–32, P's basis in its T stock is reduced by $50 and, under paragraph (f)(2)(ii) of this section, the intercompany distribution is excluded from P's gross income. Further, in Year 9, instead of liquidating T, P distributes the T stock to its shareholders in a transaction to which section 355 applies.

(b) *Analysis*. On the distribution of the T stock in Year 9, P has $0 of unrecognized gain under section 355(c). Under paragraph (b)(3)(ii) of this section, P's $0 of unrecognized gain or loss with respect to the T stock under section 355(c) is a corresponding item. P takes its $60 intercompany gain into account under the matching rule in Year 9 to reflect the difference between P's $0 of unrecognized gain and P's $60 of recomputed gain ($50 unrecognized gain and $10 recognized gain). (If P and S were divisions of a single corporation, P would have had a $40 basis in the T stock, and, after the Year 7 distribution, would have held the T stock with a $10 excess loss account.) See paragraph (f)(7), *Example* 2 of this section. Paragraph (c)(6) of this section does not prevent the redetermination of P's intercompany gain as excluded from gross income provided P succeeds to S's intercompany item; P and S are a single entity; P's basis in the T stock that reflects the $60 intercompany gain taken into account is eliminated without the recognition of gain or loss (and this eliminated basis is not further reflected in any successor asset); the group has not derived any Federal income tax benefit from the basis in the T stock and will not derive any Federal income tax benefit from a redetermination of this portion of the gain; and the effects of the intercompany transaction have not previously been reflected, directly or indirectly, on the P group's consolidated return. (See paragraph (c)(6)(ii)(C) of this section.) The intercompany transaction with respect to the T stock resulted in an increase in the basis of the T stock, and this increase in the basis of the T stock prevented P from holding the T stock with a $10 excess loss account (as a result of the Year 7 distribution) at the time of the section 355 distribution. Accordingly, the group derived a Federal income tax benefit from the intercompany transaction to the extent of $10 and, under paragraph (c)(6)(ii)(C) of this section, only $50 of the $60 intercompany gain that P takes into account is redetermined to be excluded from gross income.

(c) *Application of section 355(e)*. If it were determined that section 355(e) applied to P's distribution of the T stock, P would recognize $0 of gain and derive a Federal income tax benefit to the extent of the full $60 increase in the basis of the T stock. Therefore, no portion of P's intercompany gain would be redetermined to be excluded from gross income under paragraph (c)(6)(ii)(C) of this section.

(iii) *Effective/applicability date*—(A) *In general*. Paragraphs (c)(6)(ii)(C), (c)(6)(ii)(D), and (c)(7)(ii), *Examples 16* and *17* of this section apply with respect to items taken into account on or after March 4, 2011.

(B) *Prior periods*. For items taken into account on or after March 7, 2008, and before March 4, 2011, see §1.1502–13T(c)(6)(ii)(C) and (f)(7), *Examples 7* and *8* as contained in 26 CFR part 1 in effect on April 1, 2009. For items taken into account before March 7, 2008, see §1.1502–13 as contained in 26 CFR part 1 in effect on April 1, 2007.

(d) *Acceleration rule*. S's intercompany items and B's corresponding items are taken into account under this paragraph (d) to the extent they cannot be taken into account to produce the effect of treating S and B as divisions of a single corporation. For this purpose, the following rules apply:

(1) *S's items*—(i) *Timing*. S takes its intercompany items into account to the extent they cannot be taken into account to produce the effect of treating S and B as divisions of a single corporation. The items are taken into account immediately before it first becomes impossible to achieve this effect. For this purpose, the effect cannot be achieved—

(A) To the extent an intercompany item or corresponding item will not be taken into account in determining the group's consolidated taxable income (or consolidated tax liability) under the matching rule (for example, if S or B becomes a nonmember, or if S's intercompany item is no longer reflected in the difference between B's basis (or an amount equivalent to basis) in property and the basis (or equivalent amount) the property would have if S and B were divisions of a single corporation); or

(B) To the extent a nonmember reflects, directly or indirectly, any aspect of the intercompany transaction (e.g., if B's cost basis in property purchased from S is reflected by a nonmember under section 362 following a section 351 transaction).

(ii) *Attributes*. The attributes of S's intercompany items taken into account under this paragraph (d)(1) are determined as follows:

(A) *Sale, exchange, or distribution*. If the item is from an intercompany sale, exchange, or distribution of property, its attributes are determined under the principles of the matching rule as if B sold the property, at the time the item is taken into account under paragraph

(d)(1)(i) of this section, for a cash payment equal to B's adjusted basis in the property (i.e., at no net gain or loss), to the following person:

(*1*) *Property leaves the group.* If the property is owned by a nonmember immediately after S's item is taken into account, B is treated as selling the property to that nonmember. If the nonmember is related for purposes of any provision of the Internal Revenue Code or regulations to any party to the intercompany transaction (or any related transaction) or to the common parent, the nonmember is treated as related to B for purposes of that provision. For example, if the nonmember is related to P within the meaning of section 1239(b), the deemed sale is treated as being described in section 1239(a). See paragraph (j)(6) of this section, under which property is not treated as being owned by a nonmember if it is owned by the common parent after the common parent becomes the only remaining member.

(*2*) *Property does not leave the group.* If the property is not owned by a nonmember immediately after S's item is taken into account, B is treated as selling the property to an affiliated corporation that is not a member of the group.

(B) *Other transactions.* If the item is from an intercompany transaction other than a sale, exchange, or distribution of property (e.g., income from S's services capitalized by B), its attributes are determined on a separate entity basis.

(2) *B's items*—(i) *Attributes.* The attributes of B's corresponding items continue to be redetermined under the principles of the matching rule, with the following adjustments:

(A) If S and B continue to join with each other in the filing of consolidated returns, the attributes of B's corresponding items (and any applicable holding periods) are determined by continuing to treat S and B as divisions of a single corporation.

(B) Once S and B no longer join with each other in the filing of consolidated returns, the attributes of B's corresponding items are determined as if the S division (but not the B division) were transferred by the single corporation to an unrelated person. Thus, S's activities (and any applicable holding period) before the intercompany transaction continue to affect the attributes of the corresponding items (and any applicable holding period).

(ii) *Timing.* If paragraph (d)(1) of this section applies to S, B nevertheless continues to take its corresponding items into account under its accounting method. However, the redetermination of the attributes of a corresponding item under this paragraph (d)(2) might affect its timing.

(3) *Examples.* The acceleration rule of this paragraph (d) is illustrated by the following examples.

Example 1. Becoming a nonmember—timing. (a) *Facts.* S owns land with a basis of $70. On January 1 of Year 1, S sells the land to B for $100. On July 1 of Year 3, P sells 60% of S's stock to X for $60 and, as a result, S becomes a nonmember.

(b) *Matching rule.* Under the matching rule, none of S's $30 gain is taken into account in Years 1 through 3 because there is no difference between B's $0 gain or loss taken into account and the recomputed gain or loss.

(c) *Acceleration of S's intercompany items.* Under the acceleration rule of paragraph (d) of this section, S's $30 gain is taken into account in computing consolidated taxable income (and consolidated tax liability) immediately before the effect of treating S and B as divisions of a single corporation cannot be produced. Because the effect cannot be produced once S becomes a nonmember, S takes its $30 gain into account in Year 3 immediately before becoming a nonmember. S's gain is reflected under § 1.1502–32 in P's basis in the S stock immediately before P's sale of the stock. Under § 1.1502–32, P's basis in the S stock is increased by $30, and therefore P's gain is reduced (or loss is increased) by $18 (60% of $30). See also §§ 1.1502–33 and 1.1502–76(b). (The results would be the same if S sold the land to B in an installment sale to which section 453 would otherwise apply, because S must take its intercompany gain into account under this section.)

(d) *B's corresponding items.* Notwithstanding the acceleration of S's gain, B continues to take its corresponding items into account under its accounting method. Thus, B's items from the land are taken into account based on subsequent events (e.g., its sale of the land).

(e) *Sale of B's stock.* The facts are the same as in paragraph (a) of this *Example 1*, except that P sells 60% of B's stock (rather than S stock) to X for $60 and, as a result, B becomes a nonmember. Because the effect of treating S and B as divisions of a single corporation cannot be produced once B becomes

a nonmember, S takes its $30 gain into account under the acceleration rule immediately before B becomes a nonmember. (The results would be the same if S sold the land to B in an installment sale to which section 453 would otherwise apply, because S must take its intercompany gain into account under this section.)

(f) *Discontinue filing consolidated returns.* The facts are the same as in paragraph (a) of this *Example 1*, except that the P group receives permission under §1.1502–75(c) to discontinue filing consolidated returns beginning in Year 3. Under the acceleration rule, S takes its $30 gain into account on December 31 of Year 2.

(g) *No subgroups.* The facts are the same as in paragraph (a) of this *Example 1*, except that P simultaneously sells all of the stock of both S and B to X (rather than 60% of S's stock), and S and B become members of the X consolidated group. Because the effect of treating S and B as divisions of a single corporation in the P group cannot be produced once S and B become nonmembers, S takes its $30 gain into account under the acceleration rule immediately before S and B become nonmembers. (Paragraph (j)(5) of this section does not apply to treat the X consolidated group as succeeding to the P group because the X group acquired only the stock of S and B.) However, so long as S and B continue to join with each other in the filing of consolidated returns, B continues to treat S and B as divisions of a single corporation for purposes of determining the attributes of B's corresponding items from the land.

Example 2. Becoming a nonmember—attributes. (a) *Facts.* S holds land for investment with a basis of $70. On January 1 of Year 1, S sells the land to B for $100. B holds the land for sale to customers in the ordinary course of business, and expends substantial resources over a two-year period subdividing, developing, and marketing the land. On July 1 of Year 3, before B has sold any of the land, P sells 60% of S's stock to X for $60 and, as a result, S becomes a nonmember.

(b) *Attributes.* Under the acceleration rule, the attributes of S's gain are redetermined under the principles of the matching rule as if B sold the land to an affiliated corporation that is not a member of the group for a cash payment equal to B's adjusted basis in the land (because the land continues to be held within the group). Thus, whether S's gain is capital gain or ordinary income depends on the activities of both S and B. Because S and B no longer join with each other in the filing of consolidated returns, the attributes of B's corresponding items (e.g., from its subsequent sale of the land) are redetermined under the principles of the matching rule as if the S division (but not the B division) were transferred by the single corporation to an unrelated person at the time of P's sale of the S stock. Thus, B continues to take into account the activities of S with respect to the land before the intercompany transaction.

(c) *Depreciable property.* The facts are the same as in paragraph (a) of this *Example 2*, except that the property sold by S to B is depreciable property. Section 1239 applies to treat all of S's gain as ordinary income because it is taken into account as a result of B's deemed sale of the property to an affiliated corporation that is not a member of the group (a related person within the meaning of section 1239(b)).

Example 3. Selling member's disposition of installment note. (a) *Facts.* S owns land with a basis of $70. On January 1 of Year 1, S sells the land to B in exchange for B's $110 note. The note bears a market rate of interest in excess of the applicable Federal rate, and provides for principal payments of $55 in Year 4 and $55 in Year 5. On July 1 of Year 3, S sells B's note to X for $110.

(b) *Timing.* S's intercompany gain is taken into account under this section, and not under the rules of section 453. Consequently, S's sale of B's note does not result in its intercompany gain from the land being taken into account (e.g., under section 453B). The sale does not prevent S's intercompany items and B's corresponding items from being taken into account in determining the group's consolidated taxable income under the matching rule, and X does not reflect any aspect of the intercompany transaction (X has its own cost basis in the note). S will take the intercompany gain into account under the matching rule or acceleration rule based on subsequent events (e.g., B's sale of the land). See also paragraph (g) of this section for additional rules applicable to B's note as an intercompany obligation.

Example 4. Cancellation of debt and attribute reduction under section 108(b). (a) *Facts.* S holds land for investment with a basis of $0. On January 1 of Year 1, S sells the land to B for $100. B also holds the land for investment. During Year 3, B is insolvent and B's nonmember creditors discharge $60 of B's indebtedness. Because of insolvency, B's $60 discharge is excluded from B's gross income under section 108(a), and B reduces the basis of the land by $60 under sections 108(b) and 1017.

(b) *Acceleration rule.* As a result of B's basis reduction under section 1017, $60 of S's intercompany gain will not be taken into account under the matching rule (because there is only a $40 difference between B's $40 basis in the land and the $0 basis the land would have if S and B were divisions of a single corporation). Accordingly, S takes $60 of its gain into account under the acceleration rule in Year 3. S's gain is long-term capital gain, determined under paragraph (d)(1)(ii) of this section as if B sold the land to an affiliated corporation that is not a member of the

group for $100 immediately before the basis reduction.

(c) *Purchase price adjustment.* Assume instead that S sells the land to B in exchange for B's $100 purchase money note, B remains solvent, and S subsequently agrees to discharge $60 of the note as a purchase price adjustment to which section 108(e)(5) applies. Under applicable principles of tax law, $60 of S's gain and $60 of B's basis in the land are eliminated and never taken into account. Similarly, the note is not treated as satisfied and reissued under paragraph (g) of this section.

Example 5. Section 481. (a) *Facts.* S operates several trades or businesses, including a manufacturing business. S receives permission to change its method of accounting for valuing inventory for its manufacturing business. S increases the basis of its ending inventory by $100, and the related $100 positive section 481(a) adjustment is to be taken into account ratably over six taxable years, beginning in Year 1. During Year 3, S sells all of the assets used in its manufacturing business to B at a gain. Immediately after the transfer, B does not use the same inventory valuation method as S. On a separate entity basis, S's sale results in an acceleration of the balance of the section 481(a) adjustment to Year 3.

(b) *Timing and attributes.* Under paragraph (b)(2) of this section, the balance of S's section 481(a) adjustment accelerated to Year 3 is intercompany income. However, S's $100 basis increase before the intercompany transaction eliminates the related difference for this amount between B's corresponding items taken into account and the recomputed corresponding items in subsequent periods. Because the accelerated section 481(a) adjustment will not be taken into account in determining the group's consolidated taxable income (and consolidated tax liability) under the matching rule, the balance of S's section 481 adjustment is taken into account under the acceleration rule as ordinary income at the time of the intercompany transaction. (If S's sale had not resulted in accelerating S's section 481(a) adjustment on a separate entity basis, S would have no intercompany income to be taken into account under this section.)

(e) *Simplifying rules*—(1) *Dollar-value LIFO inventory methods*—(i) *In general.* This paragraph (e)(1) applies if either S or B uses a dollar-value LIFO inventory method to account for intercompany transactions. Rather than applying the matching rule separately to each intercompany inventory transaction, this paragraph (e)(1) provides methods to apply an aggregate approach that is based on dollar-value LIFO inventory accounting. Any method selected under this paragraph (e)(1) must be applied consistently.

(ii) *B uses dollar-value LIFO*—(A) *In general.* If B uses a dollar-value LIFO inventory method to account for its intercompany inventory purchases, and includes all of its inventory costs incurred for a year in its cost of goods sold for the year (that is, B has no inventory increment for the year), S takes into account all of its intercompany inventory items for the year. If B does not include all of its inventory costs incurred for the year in its cost of goods sold for the year (that is, B has an inventory increment for the year), S does not take all of its intercompany inventory income or loss into account. The amount not taken into account is determined under either the increment averaging method of paragraph (e)(1)(ii)(B) of this section or the increment valuation method of paragraph (e)(1)(ii)(C) of this section. Separate computations are made for each pool of B that receives intercompany purchases from S, and S's amount not taken into account is layered based on B's LIFO inventory layers.

(B) *Increment averaging method.* Under this paragraph (e)(1)(ii)(B), the amount not taken into account is the amount of S's intercompany inventory income or loss multiplied by the ratio of the LIFO value of B's current-year costs of its layer of increment to B's total inventory costs incurred for the year under its LIFO inventory method. If B includes more than its inventory costs incurred during any subsequent year in its cost of goods sold (a decrement), S takes into account the intercompany inventory income or loss layers in the same manner and proportion as B takes into account its inventory decrements.

(C) *Increment valuation method.* Under this paragraph (e)(1)(ii)(C), the amount not taken into account is the amount of S's intercompany inventory income or loss for the appropriate period multiplied by the ratio of the LIFO value of B's current-year costs of its layer of increment to B's total inventory costs incurred in the appropriate period under its LIFO inventory method. The principles of paragraph (e)(1)(ii)(B) of this section otherwise apply. The appropriate period is the period of B's

year used to determine its current-year costs.

(iii) *S uses dollar-value LIFO.* If S uses a dollar-value LIFO inventory method to account for its intercompany inventory sales, S may use any reasonable method of allocating its LIFO inventory costs to intercompany transactions. LIFO inventory costs include costs of prior layers if a decrement occurs. For example, a reasonable allocation of the most recent costs incurred during the consolidated return year can be used to compute S's intercompany inventory income or loss for the year if S has an inventory increment and uses the earliest acquisitions costs method, but S must apportion costs from the most recent appropriate layers of increment if an inventory decrement occurs for the year.

(iv) *Other reasonable methods.* S or B may use a method not specifically provided in this paragraph (e)(1) that is expected to reasonably take into account intercompany items and corresponding items from intercompany inventory transactions. However, if the method used results, for any year, in a cumulative amount of intercompany inventory items not taken into account by S that significantly exceeds the cumulative amount that would not be taken into account under paragraph (e)(1)(ii) or (iii) of this section, S must take into account for that year the amount necessary to eliminate the excess. The method is thereafter applied with appropriate adjustments to reflect the amount taken into account.

(v) *Examples.* The inventory rules of this paragraph (e)(1) are illustrated by the following examples.

Example 1. Increment averaging method. (a) *Facts.* Both S and B use a double-extension, dollar-value LIFO inventory method, and both value inventory increments using the earliest acquisitions cost valuation method. During Year 2, S sells 25 units of product Q to B on January 15 at $10/unit. S sells another 25 units on April 15, on July 15, and on September 15, at $12/unit. S's earliest cost of product Q is $7.50/unit and S's most recent cost of product Q is $8.00/unit. Both S and B have an inventory increment for the year. B's total inventory costs incurred during Year 2 are $6,000 and the LIFO value of B's Year 2 layer of increment is $600.

(b) *Intercompany inventory income.* Under paragraph (e)(1)(iii) of this section, S must use a reasonable method of allocating its LIFO inventory costs to intercompany transactions. Because S has an inventory increment for Year 2 and uses the earliest acquisitions cost method, a reasonable method of determining its intercompany cost of goods sold for product Q is to use its most recent costs. Thus, its intercompany cost of goods sold is $800 ($8.00 most recent cost, multiplied by 100 units sold to B), and its intercompany inventory income is $350 ($1,150 sales proceeds from B minus $800 cost).

(c) *Timing.* (i) Under the increment averaging method of paragraph (e)(1)(ii)(B) of this section, $35 of S's $350 of intercompany inventory income is not taken into account in Year 2, computed as follows:

$$\frac{\text{LIFO value of B's Year 2 layer of increment}}{\text{B's total inventory costs for Year 2}} = \frac{\$600}{\$6{,}000} = 10\%$$

$$10\% \times \text{S's \$350 intercompany inventory income} = \$35$$

(ii) Thus, $315 of S's intercompany inventory income is taken into account in Year 2 ($350 of total intercompany inventory income minus $35 not taken into account).

(d) *S incurs a decrement.* The facts are the same as in paragraph (a) of this *Example 1*, except that in Year 2, S incurs a decrement equal to 50% of its Year 1 layer. Under paragraph (e)(1)(iii) of this section, S must reasonably allocate the LIFO cost of the decrement to the cost of goods sold to B to determine S's intercompany inventory income.

(e) *B incurs a decrement.* The facts are the same as in paragraph (a) of this *Example 1*, except that B incurs a decrement in Year 2. S must take into account the entire $350 of Year 2 intercompany inventory income because all 100 units of product Q are deemed sold by B in Year 2.

Example 2. Increment valuation method. (a) The facts are the same as in Example 1. In addition, B's use of the earliest acquisition's cost method of valuing its increments results in B valuing its year-end inventory using costs incurred from January through March. B's costs incurred during the year are: $1,428 in the period January through March; $1,498 in the period April through June; $1,524 in the period July through September; and $1,550 in the period October through December. S's intercompany inventory income for these periods is: $50 in the period January through March ((25×$10) − (25×$8)); $100 in the period April through June ((25×$12) − (25×$8)); $100 in the period July through September ((25×$12) − (25×$8)); and $100 in the period October through December ((25×$12) − (25×$8)).

(b) *Timing.* (i) Under the increment valuation method of paragraph (e)(1)(ii)(C) of this section, $21 of S's $350 of intercompany inventory income is not taken into account in Year 2, computed as follows:

$$\frac{\text{LIFO value of B's Year 2 layer of increment}}{\text{B's total inventory costs from January through March of Year 2}} = \frac{\$600}{\$1{,}428} = 42\%$$

$$42\% \times \text{S's \$50 intercompany inventory income for the period from January through March} = \$21$$

(ii) Thus, $329 of S's intercompany inventory income is taken into account in Year 2 ($350 of total intercompany inventory income minus $21 not taken into account).

(c) *B incurs a subsequent decrement.* The facts are the same as in paragraph (a) of this *Example 2.* In addition, assume that in Year 3, B experiences a decrement in its pool that receives intercompany purchases from S. B's decrement equals 20% of the base-year costs for its Year 2 layer. The fact that B has incurred a decrement means that all of its inventory costs incurred for Year 3 are included in cost of goods sold. As a result, S takes into account its entire amount of intercompany inventory income from its Year 3 sales. In addition, S takes into account $4.20 of its Year 2 layer of intercompany inventory income not already taken into account (20% of $21).

Example 3. Other reasonable inventory methods. (a) *Facts.* Both S and B use a dollar-value LIFO inventory method for their inventory transactions. During Year 1, S sells inventory to B and to X. Under paragraph (e)(1)(iv) of this section, to compute its intercompany inventory income and the amount of this income not taken into account, S computes its intercompany inventory income using the transfer price of the inventory items less a FIFO cost for the goods, takes into account these items based on a FIFO cost flow assumption for B's corresponding items, and the LIFO methods used by S and B are ignored for these computations. These computations are comparable to the methods used by S and B for financial reporting purposes, and the book methods and results are used for tax purposes. S adjusts the amount of intercompany inventory items not taken into account as required by section 263A.

(b) *Reasonable method.* The method used by S is a reasonable method under paragraph (e)(1)(iv) of this section if the cumulative amount of intercompany inventory items not taken into account by S is not significantly greater than the cumulative amount that would not be taken into account under the methods specifically described in paragraph (e)(1) of this section. If, for any year, the method results in a cumulative amount of intercompany inventory items not taken into account by S that significantly exceeds the cumulative amount that would not be taken into account under the methods specifically provided, S must take into account for that year the amount necessary to eliminate the excess. The method is thereafter applied with appropriate adjustments to reflect the amount taken into account (e.g., to prevent the amount from being taken into account more than once).

(2) *Reserve accounting*—(i) *Banks and thrifts.* Except as provided in paragraph (g)(4)(v) of this section (deferral of items from an intercompany obligation), a member's addition to, or reduction of, a reserve for bad debts that is maintained under section 585 is taken into account on a separate entity basis. For example, if S makes a loan to a nonmember and subsequently sells the loan to B, any deduction for an addition to a bad debt reserve under section 585 and any recapture income (or reduced bad debt deductions) are taken into account on a separate entity basis rather than as intercompany items or corresponding items taken into account under this section. Any gain or loss of S from its sale of the loan to B is taken into account under this section, however, to the extent it is not attributable to recapture of the reserve.

(ii) *Insurance companies*—(A) *Direct insurance*. If a member provides insurance to another member in an intercompany transaction, the transaction is taken into account by both members on a separate entity basis. For example, if one member provides life insurance coverage for another member with respect to its employees, the premiums, reserve increases and decreases, and death benefit payments are determined and taken into account by both members on a separate entity basis rather than taken into account under this section as intercompany items and corresponding items.

(B) *Reinsurance*—(*1*) *In general*. Paragraph (e)(2)(ii)(A) of this section does not apply to a reinsurance transaction that is an intercompany transaction. For example, if a member assumes all or a portion of the risk on an insurance contract written by another member, the amounts transferred as reinsurance premiums, expense allowances, benefit reimbursements, reimbursed policyholder dividends, experience rating adjustments, and other similar items are taken into account under the matching rule and the acceleration rule. For purposes of this section, the assuming company is treated as B and the ceding company is treated as S.

(*2*) *Reserves determined on a separate entity basis*. For purposes of determining the amount of a member's increase or decrease in reserves, the amount of any reserve item listed in section 807(c) or 832(b)(5) resulting from a reinsurance transaction that is an intercompany transaction is determined on a separate entity basis. But see section 845, under which the Commissioner may allocate between or among the members any items, recharacterize any such items, or make any other adjustments necessary to reflect the proper source and character of the separate taxable income of a member.

(3) *Consent to treat intercompany transactions on a separate entity basis*—(i) *General rule*. The common parent may request consent to take into account on a separate entity basis items from intercompany transactions other than intercompany transactions with respect to stock or obligations of members. Consent may be granted for all items, or for items from a class or classes of transactions. The consent is effective only if granted in writing by the Internal Revenue Service. Unless revoked with the written consent of the Internal Revenue Service, the separate entity treatment applies to all affected intercompany transactions in the consolidated return year for which consent is granted and in all subsequent consolidated return years. Consent under this paragraph (e)(3) does not apply for purposes of taking into account losses and deductions deferred under section 267(f).

(ii) *Time and manner for requesting consent*. The request for consent described in paragraph (e)(3)(i) of this section must be made in the form of a ruling request. The request must be signed by the common parent, include any information required by the Internal Revenue Service, and be filed on or before the due date of the consolidated return (not including extensions of time) for the first consolidated return year to which the consent is to apply. The Internal Revenue Service may impose terms and conditions for granting consent. A copy of the consent must be attached to the group's consolidated returns (or amended returns) as required by the terms of the consent.

(iii) *Effect of consent on methods of accounting*. A consent for separate entity accounting under this paragraph (e)(3), and a revocation of that consent, may require changes in members' methods of accounting for intercompany transactions. Because the consent, or a revocation of the consent, is effective for all intercompany transactions occurring in the consolidated return year for which the consent or revocation is first effective, any change in method is effected on a cut-off basis. Section 446(e) consent is granted for any changes in methods of accounting for intercompany transactions that are necessary solely to conform a member's methods to a binding consent with respect to the group under this paragraph (e)(3) or the revocation of that consent, provided the changes are made in the first consolidated return year for which the consent or revocation under this paragraph (e)(3) is effective. Therefore, section 446(e) consent must be separately

requested under applicable administrative procedures if a member has failed to conform its practices to the separate entity accounting provided under this paragraph (e)(3) or the revocation of that treatment in the first consolidated return year for which the consent to use separate entity accounting or revocation of that consent is effective.

(iv) *Consent to treat intercompany transactions on a separate entity basis under prior law.* A group that has received consent that is in effect as of the first day of the first consolidated return year beginning on or after July 12, 1995 to treat certain intercompany transactions as provided in §1.1502–13(c)(3) of the regulations (as contained in the 26 CFR part 1 edition revised as of April 1, 1995) will be considered to have obtained the consent of the Commissioner to take items from intercompany transactions into account on a separate entity basis as provided in paragraph (e)(3)(i) of this section. This treatment is applicable only to the items, class or classes of transactions for which consent was granted under prior law.

(f) *Stock of members*—(1) *In general.* In addition to the general rules of this section, the rules of this paragraph (f) apply to stock of members.

(2) *Intercompany distributions to which section 301 applies*—(i) *In general.* This paragraph (f)(2) provides rules for intercompany transactions to which section 301 applies (intercompany distributions). For purposes of determining whether a distribution is an intercompany distribution, it is treated as occurring under the principles of the entitlement rule of paragraph (f)(2)(iv) of this section. A distribution is not an intercompany distribution to the extent it is deducted by the distributing member. See, for example, section 1382(c)(1).

(ii) *Distributee member.* An intercompany distribution is not included in the gross income of the distributee member (B). However, this exclusion applies to a distribution only to the extent there is a corresponding negative adjustment reflected under §1.1502–32 in B's basis in the stock of the distributing member (S). For example, no amount is included in B's gross income under section 301(c)(3) from a distribution in excess of the basis of the stock of a subsidiary that results in an excess loss account under §1.1502–32(a) which is treated as negative basis under §1.1502–19. B's dividend received deduction under section 243(a)(3) is determined without regard to any intercompany distributions under this paragraph (f)(2) to the extent they are not included in gross income. See §1.1502–26(b) (applicability of the dividends received deduction to distributions not excluded from gross income, such as a distribution from the common parent to a subsidiary owning stock of the common parent).

(iii) *Distributing member.* The principles of section 311(b) apply to S's loss, as well as gain, from an intercompany distribution of property. Thus, S's loss is taken into account under the matching rule if the property is subsequently sold to a nonmember. However, section 311(a) continues to apply to distributions to nonmembers (for example, loss is not recognized).

(iv) *Entitlement rule*—(A) *In general.* For all Federal income tax purposes, an intercompany distribution is treated as taken into account when the shareholding member becomes entitled to it (generally on the record date). For example, if B becomes entitled to a cash distribution before it is made, the distribution is treated as made when B becomes entitled to it. For this purpose, B is treated as entitled to a distribution no later than the time the distribution is taken into account under the Internal Revenue Code (e.g., under section 305(c)). To the extent a distribution is not made, appropriate adjustments must be made as of the date it was taken into account.

(B) *Nonmember shareholders.* If nonmembers own stock of the distributing corporation at the time the distribution is treated as occurring under this paragraph (f)(2)(iv), appropriate adjustments must be made to prevent the acceleration of the distribution to members from affecting distributions to nonmembers.

(3) *Boot in an intercompany reorganization*—(i) *Scope.* This paragraph (f)(3)

provides additional rules for an intercompany transaction in which the receipt of money or other property (nonqualifying property) results in the application of section 356. For example, the distribution of stock of a lower-tier member to a higher-tier member in an intercompany transaction to which section 355 would apply but for the receipt of nonqualifying property is a transaction to which this paragraph (f)(3) applies. This paragraph (f)(3) does not apply if a party to the transaction becomes a member or nonmember as part of the same plan or arrangement. For example, if S merges into a nonmember in a transaction described in section 368(a)(1)(A), this paragraph (f)(3) does not apply.

(ii) *Treatment.* Nonqualifying property received as part of a transaction described in this paragraph (f)(3) is treated as received by the member shareholder in a separate transaction. See, for example, sections 302 and 311 (rather than sections 356 and 361). The nonqualifying property is treated as taken into account immediately after the transaction if section 354 would apply but for the fact that nonqualifying property is received. It is treated as taken into account immediately before the transaction if section 355 would apply but for the fact that nonqualifying property is received. The treatment under this paragraph (f)(3)(ii) applies for all Federal income tax purposes.

(4) *Acquisition by issuer of its own stock.* If a member acquires its own stock, or an option to buy or sell its own stock, in an intercompany transaction, the member's basis in that stock or option is treated as eliminated for all purposes. Accordingly, S's intercompany items from the stock or options of B are taken into account under this section if B acquires the stock or options in an intercompany transaction (unless, for example, B acquires the stock in exchange for successor property within the meaning of paragraph (j)(1) of this section in a nonrecognition transaction). For example, if B redeems its stock from S in a transaction to which section 302(a) applies, S's gain from the transaction is taken into account immediately under the acceleration rule.

(5) *Certain liquidations and distributions*—(i) *Netting allowed.* S's intercompany item from a transfer to B of the stock of another corporation (T) is taken into account under this section in certain circumstances even though the T stock is never held by a nonmember after the intercompany transaction. For example, if S sells all of T's stock to B at a gain, and T subsequently liquidates into B in a separate transaction to which section 332 applies, S's gain is taken into account under the matching rule. Under paragraph (c)(6)(ii) of this section, S's intercompany gain taken into account as a result of a liquidation under section 332 or a comparable nonrecognition transaction is not redetermined to be excluded from gross income. Under this paragraph (f)(5)(i), if S has both intercompany income or gain and intercompany deduction or loss attributable to stock of the same corporation having the same material terms, only the income or gain in excess of the deduction or loss is subject to paragraph (c)(6)(ii) of this section. This paragraph (f)(5)(i) applies only to a transaction in which B's basis in its T stock is permanently eliminated in a liquidation under section 332 or any comparable nonrecognition transaction, including—

(A) A merger of B into T under section 368(a);

(B) A distribution by B of its T stock in a transaction described in section 355; or

(C) A deemed liquidation of T resulting from an election under section 338(h)(10).

(ii) *Elective relief*—(A) *In general.* If an election is made pursuant to this paragraph (f)(5)(ii), certain transactions are recharacterized to prevent S's items from being taken into account or to provide offsets to those items. This paragraph (f)(5)(ii) applies only if T is a member throughout the period beginning with S's transfer and ending with the completion of the nonrecognition transaction.

(B) *Section 332—(1) In general.* If section 332 would otherwise apply to T's (old T's) liquidation into B, and B transfers substantially all of old T's assets to a new member (new T), and if a direct transfer of substantially all of

old T's assets to new T would qualify as a reorganization described in section 368(a), then, for all Federal income tax purposes, T's liquidation into B and B's transfer of substantially all of old T's assets to new T will be disregarded and instead, the transaction will be treated as if old T transferred substantially all of its assets to new T in exchange for new T stock and the assumption of T's liabilities in a reorganization described in section 368(a). (Under paragraph (j)(1) of this section, B's stock in new T would be a successor asset to B's stock in old T, and S's gain would be taken into account based on the new T stock.)

(*2*) *Time limitation and adjustments*. The transfer of old T's assets to new T qualifies under paragraph (f)(5)(ii)(B)(*1*) of this section only if B has entered into a written plan, on or before the due date of the group's consolidated income tax return (including extensions) for the tax year that includes the date of old T's liquidation, to transfer the old T assets to new T, and the statement described in paragraph (f)(5)(ii)(E) of this section is included on or with a timely filed consolidated income tax return (including extensions) for the tax year that includes the date of the liquidation. However, in the case of a liquidation of old T on or after October 25, 2007, by a taxpayer whose original tax return for the year of liquidation was filed on or before November 3, 2009, see §1.1502–13T(f)(5)(ii)(F)(*3*) as contained in 26 CFR part 1, revised April 1, 2012. In either case, the transfer of substantially all of T's assets to new T must be completed within 12 months of the filing of the return. Appropriate adjustments are made to reflect any events occurring before the formation of new T and to reflect any assets not transferred to new T, or liabilities not assumed by new T. For example, if B retains an asset of old T, the asset is treated under paragraph (f)(3) of this section as acquired by new T but distributed to B immediately after the reorganization.

(C) *Sections 338(h)(10) and 336(e)*.— (*1*) *In general*. This paragraph (f)(5)(ii)(C) applies to a deemed liquidation of T under section 332 as the result of an election under section 338(h)(10) or section 336(e). This paragraph (f)(5)(ii)(C) does not apply if paragraph (f)(5)(ii)(B) of this section is applied to the deemed liquidation. Under this paragraph, B is treated with respect to each share of its T stock as recognizing as a corresponding item any loss or deduction it would recognize (determined after adjusting stock basis under §1.1502–32) if section 331 applied to the deemed liquidation. For all other Federal income tax purposes, the deemed liquidation remains subject to section 332.

(*2*) *Limitation on amount of loss*. The amount of B's loss or deduction under this paragraph (f)(5)(ii)(C) is limited as follows—

(*i*) The aggregate amount of loss recognized with respect to T stock cannot exceed the amount of S's intercompany income or gain that is in excess of S's intercompany deduction or loss with respect to shares of T stock having the same material terms as the shares giving rise to S's intercompany income or gain; and

(*ii*) The aggregate amount of loss recognized under this paragraph (f)(5)(ii)(C) from T's deemed liquidation cannot exceed the net amount of deduction or loss (if any) that would be taken into account from the deemed liquidation if section 331 applied with respect to all T shares.

(*3*) *Asset sale, etc*. The principles of this paragraph (f)(5)(ii)(C) apply, with appropriate adjustments, if T transfers all of its assets to a nonmember and completely liquidates in a transaction comparable to the section 338(h)(10) transaction described in paragraph (f)(5)(ii)(C)(*1*) of this section. For example, if S sells all of T's stock to B at a gain followed by T's merger into a nonmember in exchange for a cash payment to B in a transaction treated for Federal income tax purposes as T's sale of its assets to the nonmember and complete liquidation, the merger is ordinarily treated as a comparable transaction.

(D) *Section 355*. If B distributes the T stock in an intercompany transaction to which section 355 applies (including an intercompany transaction to which 355 applies because of the application of paragraph (f)(3) of this section), the redetermination of the basis of the T stock under section 358 could cause S's gain or loss to be taken into account

under this section. This paragraph (f)(5)(ii)(D) applies to treat B's distribution as subject to sections 301 and 311 (as modified by this paragraph (f)), rather than section 355. The election will prevent S's gain or loss from being taken into account immediately to the extent matching remains possible, but B's gain or loss from the distribution will also be taken into account under this section.

(E) *Election*. An election to apply paragraph (f)(5)(ii) of this section is made in a separate statement entitled, ''[INSERT NAME AND EMPLOYER IDENTIFICATION NUMBER OF COMMON PARENT] HEREBY ELECTS THE APPLICATION OF §1.1502–13(f)(5)(ii) FOR AN INTERCOMPANY TRANSACTION INVOLVING [INSERT NAME AND EMPLOYER IDENTIFICATION NUMBER OF S] AND [INSERT NAME AND EMPLOYER IDENTIFICATION NUMBER OF T].'' A separate election must be made for each such application. The election must be filed by including the statement on or with the consolidated group's income tax return for the year of T's liquidation (or other transaction). The Commissioner may impose reasonable terms and conditions to the application of paragraph (f)(5)(ii) of this section that are consistent with the purposes of such section. The statement must—

(*1*) Identify S's intercompany transaction and T's liquidation (or other transaction); and

(*2*) Specify which provision of paragraph (f)(5)(ii) of this section applies and how it alters the otherwise applicable results under this section (including, for example, the amount of S's intercompany items and the amount deferred or offset as a result of paragraph (f)(5)(ii) of this section).

(F) *Effective/applicability date*—(*1*) *General rule*. Paragraphs (f)(5)(ii)(B)(*1*) and (*2*) of this section apply to transactions in which old T's liquidation into B occurs on or after October 25, 2007.

(*2*) *Prior periods*. For transactions in which old T's liquidation into B occurs before October 25, 2007, see paragraphs (f)(5)(ii)(B)(*1*) and (*2*) of this section in effect prior to October 25, 2007, as contained in 26 CFR part 1, revised April 1, 2009.

(6) *Stock of common parent*. In addition to the general rules of this section, this paragraph (f)(6) applies to parent stock (P stock) and positions in P stock held or entered into by another member. For this purpose, P stock is any stock of the common parent held (directly or indirectly) by another member or any stock of a member (the issuer) that was the common parent if the stock was held (directly or indirectly) by another member while the issuer was the common parent.

(i) *Loss stock*—(A) *Recognized loss*. Any loss recognized, directly or indirectly, by a member with respect to P stock is permanently disallowed and does not reduce earnings and profits. See §1.1502–32(b)(3)(iii)(A) for a corresponding reduction in the basis of the member's stock.

(B) *Other cases*. If a member, M, owns P stock, the stock is subsequently owned by a nonmember, and, immediately before the stock is owned by the nonmember, M's basis in the share exceeds its fair market value, then, to the extent paragraph (f)(6)(i)(A) of this section does not apply, M's basis in the share is reduced to the share's fair market value immediately before the share is held by the nonmember. For example, if M owns shares of P stock with a $100x basis and M becomes a nonmember at a time when the P shares have a value of $60x, M's basis in the P shares is reduced to $60x immediately before M becomes a nonmember. Similarly, if M contributes the P stock to a nonmember in a transaction subject to section 351, M's basis in the shares is reduced to $60x immediately before the contribution. See §1.1502–32(b)(3)(iii)(B) for a corresponding reduction in the basis of M's stock.

(C) *Waiver of built-in loss on P stock*—(*1*) *In general*. If a nonmember that owns P stock with a basis in excess of its fair market value becomes a member of the P consolidated group in a qualifying cost basis transaction, the group may make an irrevocable election to reduce the basis of the P stock to its fair market value immediately before the nonmember becomes a member of the P group. If the nonmember was a member of another consolidated group immediately before becoming a

member of the P group, the reduction in basis is treated as occurring immediately after it ceases to be a member of the prior group. A qualifying cost basis transaction is the purchase (i.e., a transaction in which basis is determined under section 1012) by members of the P consolidated group (while they are members) in a 12-month period of an amount of the nonmember's stock satisfying the requirements of section 1504(a)(2).

(*2*) *Election*. The election described in paragraph (f)(6)(i)(C)(*1*) of this section must be made in a separate statement entitled, ''ELECTION TO REDUCE BASIS OF P STOCK UNDER §1.1502–13(f)(6) HELD BY [INSERT NAME AND EMPLOYER IDENTIFICATION NUMBER OF MEMBER WHOSE BASIS IN P STOCK IS REDUCED].'' The election must be filed by including the statement on or with the consolidated group's income tax return for the year in which the nonmember becomes a member. The statement must identify the member's basis in the P stock (taking into account the effect of this election) and the number of shares of P stock held by the member.

(ii) *Gain stock*. For dispositions of P stock occurring before May 16, 2000, see §1.1502–13(f)(6)(ii) as contained in 26 CFR part 1 in effect on April 1, 2000. For dispositions of P stock occurring on or after May 16, 2000, see §1.1032–3.

(iii) *Mark-to-market of P stock*. Paragraphs (f)(6)(i) and (ii) of this section shall not apply to any gain or loss from a share of P stock held by a member, M, if—

(A) M regularly trades in P stock (of the same class) with customers in the ordinary course of its business as a dealer;

(B) The gain or loss on the share is taken into account by M pursuant to section 475(a);

(C) M's basis in the share is not adjusted by reference to the basis of any other property or by reference to income, gain, deduction, or loss from other property; and

(D) Neither M nor any other member of the group has structured or engaged in any transaction while a member (or in anticipation of becoming a member), during the taxable year or in any year within the preceding five taxable years that is open for assessment under section 6501, with a principal purpose of avoiding gain or creating loss on P stock subject to section 475(a).

(iv) *Options, warrants, and other positions*—(A) *In general*. This paragraph (f)(6) applies with appropriate adjustments to positions in P stock to the extent that P's gain or loss from an equivalent position would not be recognized under section 1032. Thus, if M purchases an option to buy or sell P stock and sells the option at a loss, the loss is permanently disallowed under paragraph (f)(6)(i)(A) of this section. Similarly, if M is the grantor of such an option and becomes a nonmember, then the principles of paragraph (f)(6)(i)(B) of this section apply to the extent that M would recognize loss from cash settlement of the option at its fair market value immediately before M becomes a nonmember, and proper adjustments must be made in the amount of any gain or loss subsequently realized from the position by M. If P grants M an option to acquire P stock in a transaction meeting the requirements of §1.1032–3, M is treated as having purchased the option from P for fair market value with cash contributed to M by P.

(B) *Mark-to-market of positions in P stock*. For purposes of paragraph (f)(6)(iii) of this section, gain or loss with respect to a position taken into account under section 1256(a) is treated as taken into account under section 475(a) to the extent that the gain or loss would be taken into account under the principles of section 475.

(v) *Effective date*. This paragraph (f)(6) applies to gain or loss taken into account on or after July 12, 1995, and to transactions occurring on or after July 12, 1995. For example, if S sells P stock to B at a loss prior to July 12, 1995, and B sells the P stock to a nonmember after July 12, 1995, S's loss is disallowed because it is taken into account after July 12, 1995. If a taxpayer takes a gain or loss into account or engages in a transaction on or after July 12, 1995, during a tax year ending prior to December 31, 1995, the taxpayer may treat the gain or loss or the transaction under the rules published in 1995–32 I.R.B. 47, instead of under the rules of this paragraph (f)(6).

(7) *Examples— In general*. The application of this section to intercompany transactions with respect to stock of members is illustrated by the following examples.

Example 1. Dividend exclusion and property distribution. (a) *Facts*. S owns land with a $70 basis and $100 value. On January 1 of Year 1, P's basis in S's stock is $100. During Year 1, S declares and makes a dividend distribution of the land to P. Under section 311(b), S has a $30 gain. Under section 301(d), P's basis in the land is $100. On July 1 of Year 3, P sells the land to X for $110.

(b) *Dividend elimination and stock basis adjustments*. Under paragraph (b)(1) of this section, S's distribution to P is an intercompany distribution. Under paragraph (f)(2)(ii) of this section, P's $100 of dividend income is not included in gross income. Under § 1.1502–32, P's basis in S's stock is reduced from $100 to $0 in Year 1.

(c) *Matching rule and stock basis adjustments*. Under the matching rule (treating P as the buying member and S as the selling member), S takes its $30 gain into account in Year 3 to reflect the $30 difference between P's $10 gain taken into account and the $40 recomputed gain. Under § 1.1502–32, P's basis in S's stock is increased from $0 to $30 in Year 3.

(d) *Loss property*. The facts are the same as in paragraph (a) of this *Example 1*, except that S has a $130 (rather than $70) basis in the land. Under paragraph (f)(2)(iii) of this section, the principles of section 311(b) apply to S's loss from the intercompany distribution. Thus, S has a $30 loss that is taken into account under the matching rule in Year 3 to reflect the $30 difference between P's $10 gain taken into account and the $20 recomputed loss. (The results are the same under section 267(f).) Under § 1.1502–32, P's basis in S's stock is reduced from $100 to $0 in Year 1, and from $0 to a $30 excess loss account in Year 3. (If P had distributed the land to its shareholders, rather than selling the land to X, P would take its $10 gain under section 311(b) into account, and S would take its $30 loss into account under the matching rule with $10 offset by P's gain and $20 recharacterized as a noncapital, nondeductible amount.)

(e) *Entitlement rule*. The facts are the same as in paragraph (a) of this *Example 1*, except that, after P becomes entitled to the distribution but before the distribution is made, S issues additional stock to the public and becomes a nonmember. Under paragraph (f)(2)(i) of this section, the determination of whether a distribution is an intercompany distribution is made under the entitlement rule of paragraph (f)(2)(iv) of this section. Treating S's distribution as made when P becomes entitled to it results in the distribution being an intercompany distribution. Under paragraph (f)(2)(ii) of this section, the distribution is not included in P's gross income. S's $30 gain from the distribution is intercompany gain that is taken into account under the acceleration rule immediately before S becomes a nonmember. Thus, there is a net $70 decrease in P's basis in its S stock under § 1.1502–32 ($100 decrease for the distribution and a $30 increase for S's $30 gain). Under paragraph (f)(2)(iv) of this section, P does not take the distribution into account again under separate return rules when received, and P is not entitled to a dividends received deduction.

Example 2. Excess loss accounts. (a) *Facts*. S owns all of T's only class of stock with a $10 basis and $100 value. S has substantial earnings and profits, and T has $10 of earnings and profits. On January 1 of Year 1, S declares and distributes a dividend of all of the T stock to P. Under section 311(b), S has a $90 gain. Under section 301(d), P's basis in the T stock is $100. During Year 3, T borrows $90 and declares and makes a $90 distribution to P to which section 301 applies, and P's basis in the T stock is reduced under § 1.1502–32 from $100 to $10. During Year 6, T has $5 of earnings that increase P's basis in the T stock under § 1.1502–32 from $10 to $15. On December 1 of Year 9, T issues additional stock to X and, as a result, T becomes a nonmember.

(b) *Dividend exclusion*. Under paragraph (f)(2)(ii) of this section, P's $100 of dividend income from S's distribution of the T stock, and its $10 of dividend income from T's $90 distribution, are not included in gross income.

(c) *Matching and acceleration rules*. Under § 1.1502–19(b)(1), when T becomes a nonmember P must include in income the amount of its excess loss account (if any) in T stock. P has no excess loss account in the T stock. Therefore P's corresponding item from the deconsolidation of T is $0. Treating S and P as divisions of a single corporation, the T stock would continue to have a $10 basis after the distribution, and the adjustments under § 1.1502–32 for T's $90 distribution and $5 of earnings would result in a $75 excess loss account. Thus, the recomputed corresponding item from the deconsolidation is $75. Under the matching rule, S takes $75 of its $90 gain into account in Year 9 as a result of T becoming a nonmember, to reflect the difference between P's $0 gain taken into account and the $75 recomputed gain. S's remaining $15 of gain is taken into account under the matching and acceleration rules based on subsequent events (for example, under the matching rule if P subsequently sells its T stock, or under the acceleration rule if S becomes a nonmember).

(d) *Reverse sequence*. The facts are the same as in paragraph (a) of this *Example 2*, except that T borrows $90 and makes its $90 distribution to S before S distributes T's stock

to P. Under paragraph (f)(2)(ii) of this section, T's $90 distribution to S ($10 of which is a dividend) is not included in S's gross income. The corresponding negative adjustment under § 1.1502–32 reduces S's basis in the T stock from $10 to an $80 excess loss account. Under section 311(b), S has a $90 gain from the distribution of T stock to P. Under section 301(d) P's initial basis in the T stock is $10 (the stock's fair market value), and the basis increases to $15 under § 1.1502–32 as a result of T's earnings in Year 6. The timing and attributes of S's gain are determined in the manner provided in paragraph (c) of this *Example 2*. Thus, $75 of S's gain is taken into account under the matching rule in Year 9 as a result of T becoming a nonmember, and the remaining $15 is taken into account under the matching and acceleration rules based on subsequent events.

(e) *Partial stock sale*. The facts are the same as in paragraph (a) of this *Example 2*, except that P sells 10% of T's stock to X on December 1 of Year 9 for $1.50 (rather than T's issuing additional stock and becoming a nonmember). Under the matching rule, S takes $9 of its gain into account to reflect the difference between P's $0 gain taken into account ($1.50 sale proceeds minus $1.50 basis) and the $9 recomputed gain ($1.50 sale proceeds plus $7.50 excess loss account).

(f) *Loss, rather than cash distribution*. The facts are the same as in paragraph (a) of this *Example 2*, except that T retains the loan proceeds and incurs a $90 loss in Year 3 that is absorbed by the group. The timing and attributes of S's gain are determined in the same manner provided in paragraph (c) of this *Example 2*. Under § 1.1502–32, the loss in Year 3 reduces P's basis in the T stock from $100 to $10, and T's $5 of earnings in Year 6 increase the basis to $15. Thus, $75 of S's gain is taken into account under the matching rule in Year 9 as a result of T becoming a nonmember, and the remaining $15 is taken into account under the matching and acceleration rules based on subsequent events. (The timing and attributes of S's gain would be determined in the same manner provided in paragraph (d) of this *Example 2* if T incurred the $90 loss before S's distribution of the T stock to P.)

(g) *Stock sale, rather than stock distribution*. The facts are the same as in paragraph (a) of this *Example 2*, except that S sells the T stock to P for $100 (rather than distributing the stock). The timing and attributes of S's gain are determined in the same manner provided in paragraph (c) of this *Example 2*. Thus, $75 of S's gain is taken into account under the matching rule in Year 9 as a result of T becoming a nonmember, and the remaining $15 is taken into account under the matching and acceleration rules based on subsequent events.

Example 3. Intercompany reorganization. (a) *Facts*. P forms S and B by contributing $200 to the capital of each. During Years 1 through 4, S and B each earn $50, and under § 1.1502–32 P adjusts its basis in the stock of each to $250. (See § 1.1502–33 for adjustments to earnings and profits.) On January 1 of Year 5, the fair market value of S's assets and its stock is $500, and S merges into B in a tax-free reorganization. Pursuant to the plan of reorganization, P receives B stock with a fair market value of $350 and $150 of cash.

(b) *Treatment as a section 301 distribution*. The merger of S into B is a transaction to which paragraph (f)(3) of this section applies. P is treated as receiving additional B stock with a fair market value of $500 and, under section 358, a basis of $250. Immediately after the merger, $150 of the stock received is treated as redeemed, and the redemption is treated under section 302(d) as a distribution to which section 301 applies. Because the $150 distribution is treated as not received as part of the merger, section 356 does not apply and no basis adjustments are required under section 358(a)(1)(A) and (B). Because B is treated under section 381(c)(2) as receiving S's earnings and profits and the redemption is treated as occurring after the merger, $100 of the distribution is treated as a dividend under section 301 and P's basis in the B stock is reduced correspondingly under § 1.1502–32. The remaining $50 of the distribution reduces P's basis in the B stock. Section 301(c)(2) and § 1.1502–32. Under paragraph (f)(2)(ii) of this section, P's $100 of dividend income is not included in gross income. Under § 1.302–2(c), proper adjustments are made to P's basis in its B stock to reflect its basis in the B stock redeemed, with the result that P's basis in the B stock is reduced by the entire $150 distribution.

(c) *Depreciated property*. The facts are the same as in paragraph (a) of this *Example 3*, except that property of S with a $200 basis and $150 fair market value is distributed to P (rather than cash of B). As in paragraph (b) of this *Example 3*, P is treated as receiving additional B stock in the merger and a $150 distribution to which section 301 applies immediately after the merger. Under paragraph (f)(2)(iii) of this section, the principles of section 311(b) apply to B's $50 loss and the loss is taken into account under the matching and acceleration rules based on subsequent events (e.g., under the matching rule if P subsequently sells the property, or under the acceleration rule if B becomes a nonmember). The results are the same under section 267(f).

(d) *Divisive transaction*. Assume instead that, pursuant to a plan, S distributes the stock of a lower-tier subsidiary in a spin-off transaction to which section 355 applies together with $150 of cash. The distribution of stock is a transaction to which paragraph (f)(3) of this section applies. P is treated as receiving the $150 of cash immediately before

the section 355 distribution, as a distribution to which section 301 applies. Section 356(b) does not apply and no basis adjustments are required under section 358(a)(1) (A) and (B). Because the $150 distribution is treated as made before the section 355 distribution, the distribution reduces P's basis in the S stock under §1.1502–32, and the basis allocated under section 358(c) between the S stock and the lower-tier subsidiary stock received reflects this basis reduction.

Example 4. All cash intercompany reorganization under section 368(a)(1)(D). (a) Facts. P owns all of the stock of M and B. M owns all of the stock of S with a basis of $25. On January 1 of Year 2, the fair market value of S's assets and its stock is $100, and S sells all of its assets to B for $100 cash and liquidates. The transaction qualifies as a reorganization described in section 368(a)(1)(D). Pursuant to §1.368–2(l), B will be deemed to issue a nominal share of B stock to S in addition to the $100 of cash actually exchanged for the S assets, and S will be deemed to distribute all of the consideration to M. M will be deemed to distribute the nominal share of B stock to P.

(b) *Treatment as a section 301 distribution.* The sale of S's assets to B is a transaction to which paragraph (f)(3) of this section applies. In addition to the nominal share issued by B to S under §1.368–2(l), S is treated as receiving additional B stock with a fair market value of $100 (in lieu of the $100) and, under section 358, a basis of $25 which S distributes to M in liquidation. Immediately after the sale, the B stock (with the exception of the nominal share which is still held by M) received by M is treated as redeemed for $100, and the redemption is treated under section 302(d) as a distribution to which section 301 applies. M's basis of $25 in the B stock is reduced under §1.1502–32(b)(3)(v), resulting in an excess loss account of $75 in the nominal share. (See §1.302–2(c)). M's deemed distribution of the nominal share of B stock to P under §1.368–2(l) will result in M generating an intercompany gain under section 311(b) of $75, to be subsequently taken into account under the matching and acceleration rules.

Example 5. Stock redemptions and distributions. (a)*Facts.* Before becoming a member of the P group, S owns P stock with a $30 basis. On January 1 of Year 1, P buys all of S's stock. On July 1 of Year 3, P redeems the P stock held by S for $100 in a transaction to which section 302(a) applies.

(b) *Gain under section 302.* Under paragraph (f)(4) of this section, P's basis in the P stock acquired from S is treated as eliminated. As a result of this elimination, S's intercompany item will never be taken into account under the matching rule because P's basis in the stock does not reflect S's intercompany item. Therefore, S's $70 gain is taken into account under the acceleration rule in Year 3. The attributes of S's item are determined under paragraph (d)(1)(ii) of this section by applying the matching rule as if P had sold the stock to an affiliated corporation that is not a member of the group at no gain or loss. Although P's corresponding item from a sale of its stock would have been excluded from gross income under section 1032, paragraph (c)(6)(ii) of this section prevents S's gain from being treated as excluded from gross income; instead S's gain is capital gain.

(c) *Gain under section 311.* The facts are the same as in paragraph (a) of this *Example 4,* except that S distributes the P stock to P in a transaction to which section 301 applies (rather than the stock being redeemed), and S has a $70 gain under section 311(b). The timing and attributes of S's gain are determined in the manner provided in paragraph (b) of this *Example 4.*

(d) *Loss stock.* The facts are the same as in paragraph (a) of this *Example 4,* except that S has a $130 (rather than $30) basis in the P stock and has a $30 loss under section 302(a). The limitation under paragraph (c)(6)(ii) of this section does not apply to intercompany losses. Thus, S's loss is taken into account in Year 3 as a noncapital, nondeductible amount.

Example 6. Intercompany stock sale followed by section 332 liquidation. (a) *Facts.* S owns all of the stock of T, with a $70 basis and $100 value, and T's assets have a $10 basis and $100 value. On January 1 of Year 1, S sells all of T's stock to B for $100. On July 1 of Year 3, when T's assets are still worth $100, T distributes all of its assets to B in an unrelated complete liquidation to which section 332 applies.

(b) *Timing and attributes.* Under paragraph (b)(3)(ii) of this section, B's unrecognized gain or loss under section 332 is a corresponding item for purposes of applying the matching rule. In Year 3 when T liquidates, B has $0 of unrecognized gain or loss under section 332 because B has a $100 basis in the T stock and receives a $100 distribution with respect to its T stock. Treating S and B as divisions of a single corporation, the recomputed corresponding item would have been $30 of unrecognized gain under section 332 because B would have succeeded to S's $70 basis in the T stock. Thus, under the matching rule, S's $30 intercompany gain is taken into account in Year 3 as a result of T's liquidation. Under paragraph (c)(1)(i) of this section, the attributes of S's gain and B's corresponding item are redetermined as if S and B were divisions of a single corporation. Although S's gain ordinarily would be redetermined to be treated as excluded from gross income to reflect the nonrecognition of B's gain under section 332, S's gain remains capital gain because B's unrecognized gain under section 332 is not permanently and explicitly disallowed under the Code. See paragraph (c)(6)(ii) of this section. However, relief may be elected under paragraph (f)(5)(ii) of this section.

(c) *Intercompany sale at a loss.* The facts are the same as in paragraph (a) of this *Example 5*, except that S has a $130 (rather than $70) basis in the T stock. The limitation under paragraph (c)(6)(ii) of this section does not apply to intercompany losses. Thus, S's intercompany loss is taken into account in Year 3 as a noncapital, nondeductible amount. However, relief may be elected under paragraph (f)(5)(ii) of this section.

Example 7. Intercompany stock sale followed by section 355 distribution. (a) *Facts.* S owns all of the stock of T with a $70 basis and a $100 value. On January 1 of Year 1, S sells all of T's stock to M for $100. On June 1 of Year 6, M distributes all of its T stock to its nonmember shareholders in a transaction to which section 355 applies. At the time of the distribution, M has a basis in T stock of $100 and T has a value of $150.

(b) *Timing and attributes.* Under paragraph (b)(3)(ii) of this section, M's $50 gain not recognized on the distribution under section 355 is a corresponding item. Treating S and M as divisions of a single corporation, the recomputed corresponding item would be $80 of unrecognized gain under section 355 because M would have succeeded to S's $70 basis in the T stock. Thus, under the matching rule, S's $30 intercompany gain is taken into account in Year 6 as a result of the distribution. Under paragraph (c)(1)(i) of this section, the attributes of S's intercompany item and M's corresponding item are redetermined to produce the same effect on consolidated taxable income as if S and M were divisions of a single corporation. Although S's gain ordinarily would be redetermined to be treated as excluded from gross income to reflect the nonrecognition of M's gain under section 355(c), S's gain remains capital gain because M's unrecognized gain under section 355(c) is not permanently and explicitly disallowed under the Code. See paragraph (c)(6)(ii) of this section. Because M's distribution of the T stock is not an intercompany transaction, relief is not available under paragraph (f)(5)(ii) of this section.

(c) *Section 355 distribution within the group.* The facts are the same as under paragraph (a) of this *Example 6*, except that M distributes the T stock to B (another member of the group), and B takes a $75 basis in the T stock under section 358. Under paragraph (j)(2) of this section, B is a successor to M for purposes of taking S's intercompany gain into account, and therefore both M and B might have corresponding items with respect to S's intercompany gain. To the extent it is possible, matching with respect to B's corresponding items produces the result most consistent with treating S, M, and B as divisions of a single corporation. See paragraphs (j)(3) and (j)(4) of this section. However, because there is only $5 difference between B's $75 basis in the T stock and the $70 basis the stock would have if S, M, and B were divisions of a single corporation, only $5 can be taken into account under the matching rule with respect to B's corresponding items. (This $5 is taken into account with respect to B's corresponding items based on subsequent events.) The remaining $25 of S's $30 intercompany gain is taken into account in Year 6 under the matching rule with respect to M's corresponding item from its distribution of the T stock. The attributes of S's remaining $25 of gain are determined in the same manner as in paragraph (b) of this *Example 6*.

(d) *Relief elected.* The facts are the same as in paragraph (c) of this *Example 6* except that P elects relief pursuant to paragraph (f)(5)(ii)(D) of this section. As a result of the election, M's distribution of the T stock is treated as subject to sections 301 and 311 instead of section 355. Accordingly, M recognizes $50 of intercompany gain from the distribution, B takes a basis in the stock equal to its fair market value of $150, and S and M take their intercompany gains into account with respect to B's corresponding items based on subsequent events. (None of S's gain is taken into account in Year 6 as a result of M's distribution of the T stock.)

(g) *Obligations of members*—(1) *In general.* In addition to the general rules of this section, the rules of this paragraph (g) apply to intercompany obligations.

(2) *Definitions.* For purposes of this section, the following definitions apply—

(i) *Obligation of a member* is a debt or security of a member.

(A) *Debt of a member* is any obligation of the member constituting indebtedness under general principles of Federal income tax law (for example, under nonstatutory authorities, or under section 108, section 163, or § 1.1275–1(d)), but not an executory obligation to purchase or provide goods or services.

(B) *Security of a member* is any security of the member described in section 475(c)(2)(D) or (E), and any commodity of the member described in section 475(e)(2)(A), (B), or (C), but not if the security or commodity is a position with respect to the member's stock. See paragraphs (f)(4) and (f)(6) of this section for special rules applicable to positions with respect to a member's stock.

(ii) *Intercompany obligation* is an obligation between members, but only for the period during which both parties are members.

(iii) *Intercompany obligation subgroup* is comprised of two or more members that include the creditor and debtor on an intercompany obligation if the creditor and debtor bear the relationship described in section 1504(a)(1) to each other through an intercompany obligation subgroup parent.

(iv) *Intercompany obligation subgroup parent* is the corporation (including either the creditor or debtor) that bears the same relationship to the other members of the intercompany obligation subgroup as a common parent bears to the members of a consolidated group. Any reference to an intercompany obligation subgroup parent includes, as the context may require, a reference to a predecessor or successor. For this purpose, a predecessor is a transferor of assets to a transferee (the successor) in a transaction to which section 381(a) applies.

(v) *Tax benefit* is the benefit of, for Federal tax purposes, a net reduction in income or gain, or a net increase in loss, deduction, credit, or allowance. A tax benefit includes, but is not limited to, the use of a built-in item or items from an intercompany obligation to reduce gain or increase loss on the sale of member stock, or to create or absorb a tax attribute of a member or subgroup.

(vi) *Eighty-percent chain* is a chain of two or more corporations in which stock meeting the requirements of section 1504(a)(2) of each lower-tier member is held directly by a higher-tier member of such chain.

(3) *Deemed satisfaction and reissuance of intercompany obligations in triggering transactions*—(i) *Scope*—(A) *Triggering transactions*. For purposes of this paragraph (g)(3), a triggering transaction includes the following:

(*1*) *Assignment and extinguishment transactions*. Any intercompany transaction in which a member realizes an amount, directly or indirectly, from the assignment or extinguishment of all or part of its remaining rights or obligations under an intercompany obligation or any comparable transaction in which a member realizes any such amount, directly or indirectly, from an intercompany obligation (for example, a mark to fair market value of an obligation or a bad debt deduction). However, a reduction of the basis of an intercompany obligation pursuant to §1.1502–36(d) (attribute reduction to prevent duplication of loss), or pursuant to sections 108 and 1017 and §1.1502–28 (basis reductions upon the exclusion from gross income of discharge of indebtedness) or any other provision that adjusts the basis of an intercompany obligation as a substitute for income, gain, deduction, or loss, is not a comparable transaction.

(*2*) *Outbound transactions*. Any transaction in which an intercompany obligation becomes an obligation that is not an intercompany obligation.

(B) *Exceptions*. Except as provided in paragraph (g)(3)(i)(C) of this section, a transaction is not a triggering transaction as described in paragraph (g)(3)(i)(A) of this section if any of the exceptions in this paragraph (g)(3)(i)(B) apply. In making this determination, if a creditor or debtor realizes an amount in a transaction in which a creditor assigns all or part of its rights under an intercompany obligation to the debtor, or a debtor assigns all or part of its obligations under an intercompany obligation to the creditor, the transaction will be treated as an extinguishment and will be excepted from the definition of ''triggering transaction'' only if either of the exceptions in paragraphs (g)(3)(i)(B)(*5*) or (*6*) of this section apply. The exceptions are as follows.

(*1*) *Intercompany section 361, 332, or 351 exchange*. The transaction is an intercompany exchange to which section 361(a), sections 332 and 337(a), or (except as provided in the following sentence) section 351 applies in which no amount of income, gain, deduction or loss is recognized by the creditor or debtor. The assignment of an intercompany obligation by a creditor member in an intercompany exchange to which section 351 applies is a triggering transaction, notwithstanding the preceding sentence, if a member of the group is described in, or engages in a transaction that is described in, any of the following paragraphs.

(*i*) The transferor or transferee member has a loss subject to a limitation (for example, a loss from a separate return limitation year that is subject to limitation under §1.1502–21(c), or a dual consolidated loss that is subject to limitation under §1.1503(d)–4), but only if

the other member is not subject to a comparable limitation;

(*ii*) The transferor or transferee member has a special status within the meaning of §1.1502–13(c)(5) (for example, a bank defined in section 581, or a life insurance company subject to tax under section 801) that the other member does not also possess;

(*iii*) A member of the group realizes discharge of indebtedness income that is excluded from gross income under section 108(a) within the same taxable year as that of the exchange, and the tax attributes attributable to either the transferor or the transferee member are reduced under sections 108, 1017, and §1.1502–28 (except if the attribute reduction results solely from the application of §1.1502–28(a)(4) (reduction of certain tax attributes attributable to other members));

(*iv*) The transferee member has a nonmember shareholder;

(*v*) The transferee member issues preferred stock to the transferor member in exchange for the assignment of the intercompany obligation; or

(*vi*) The stock of the transferee member (or a higher-tier member other than a higher-tier member of an 80-percent chain that includes the transferor and transferee) is disposed of within 12 months from the assignment of the intercompany obligation, unless at the time of the assignment, the transferor member, transferee member (or in the case of successive section 351 exchanges, each transferor and transferee member) and the debtor member are all in the same 80-percent chain; and all of the stock of the transferee (or in the case of successive section 351 exchanges, the lowest-tier transferee) held by members of the group is disposed of as part of the same plan or arrangement, either directly or indirectly, to persons that are not members of the group.

(*2*) *Intercompany assumption transaction*. All of the debtor's obligations under an intercompany obligation are assumed in connection with the debtor's sale or other disposition of property (other than solely money) in an intercompany transaction in which gain or loss is recognized under section 1001.

(*3*) *Exception to the application of section 108(e)(4)*. The obligation became an intercompany obligation by reason of an event described in §1.108–2(e)(2) (exception to the application of section 108(e)(4) in the case of acquisitions by securities dealers).

(*4*) *Reserve accounting*. The amount realized is from reserve accounting under section 585 (see paragraph (g)(4)(v) of this section for special rules).

(*5*) *Intercompany extinguishment transaction*. All or part of the rights and obligations under the intercompany obligation are extinguished in an intercompany transaction (other than an exchange or deemed exchange of an intercompany obligation for a newly issued intercompany obligation), the adjusted issue price of the obligation is equal to the creditor's basis in the obligation, and the debtor's corresponding item and the creditor's intercompany item (after taking into account the special rules of paragraph (g)(4)(i)(C) of this section) with respect to the obligation offset in amount.

(*6*) *Routine modification of intercompany obligation*. All of the rights and obligations under the intercompany obligation are extinguished in an intercompany transaction that is an exchange (or deemed exchange) for a newly issued intercompany obligation, and the issue price of the newly issued obligation equals both the adjusted issue price of the extinguished obligation and the creditor's basis in the extinguished obligation. Solely for purposes of the preceding sentence, a newly issued intercompany obligation includes an obligation that is issued (or deemed issued) by a member other than the original debtor if such other member assumes the original debtor's obligations under the original obligation in a transaction that is described in either paragraph (g)(3)(i)(B)(*1*) or (g)(3)(i)(B)(*2*) of this section and the assumption results in a significant modification of the original obligation under §1.1001–3(e)(4) and a deemed exchange under §1.1001–3(b).

(*7*) *Outbound distribution of newly issued intercompany obligation*. The intercompany obligation becomes an obligation that is not an intercompany obligation in a transaction in which a

member that is a party to the reorganization exchanges property in pursuance of the plan of reorganization for a newly issued intercompany obligation of another member that is a party to the reorganization and distributes such intercompany obligation to a nonmember shareholder or nonmember creditor in a transaction to which section 361(c) applies.

(*8*) *Outbound subgroup exception*. The intercompany obligation becomes an obligation that is not an intercompany obligation in a transaction in which the members of an intercompany obligation subgroup cease to be members of a consolidated group, neither the creditor nor the debtor recognize any income, gain, deduction, or loss with respect to the intercompany obligation, and such members constitute an intercompany obligation subgroup of another consolidated group immediately after the transaction.

(C) *Tax benefit rule*. If an assignment or extinguishment of an intercompany obligation in an intercompany transaction is otherwise excepted from the definition of triggering transaction under paragraph (g)(3)(i)(B)(*1*), (*2*), (*5*), or (*6*) of this section (and not also under paragraph (g)(3)(i)(B)(*3*) or (*4*) of this section), and the assignment or extinguishment is engaged in with a view to shift items of built-in gain, loss, income, or deduction from the obligation from one member to another member in order to secure a tax benefit (as defined in paragraph (g)(2)(v) of this section) that the group or its members would not otherwise enjoy in a consolidated or separate return year, then the assignment or extinguishment will be a triggering transaction to which paragraph (g)(3)(ii) of this section applies.

(ii) *Application of deemed satisfaction and reissuance*. This paragraph (g)(3)(ii) applies if a triggering transaction occurs.

(A) *General rule*. If the intercompany obligation is debt of a member, then (except as provided in the following sentence) the debt is treated for all Federal income tax purposes as having been satisfied by the debtor for cash in an amount equal to its fair market value, and then as having been reissued as a new obligation (with a new holding period but otherwise identical terms) for the same amount of cash, immediately before the triggering transaction. However, if the creditor realizes an amount with respect to the debt in the triggering transaction that differs from the debt's fair market value, and the triggering transaction is not an exchange (or deemed exchange) of debt of a member for newly issued debt of a member, then the debt is treated for all Federal income tax purposes as having been satisfied by the debtor for cash in an amount equal to such amount realized, and reissued as a new obligation (with a new holding period but otherwise identical terms) for the same amount of cash, immediately before the triggering transaction. If the triggering transaction is a mark to fair market value under section 475, then the intercompany obligation will be deemed satisfied and reissued for its fair market value (as determined under section 475 and applicable regulations) and section 475 will not otherwise apply with respect to that triggering transaction. If the intercompany obligation is a security of a member, similar principles apply (with appropriate adjustments) to treat the security as having been satisfied and reissued immediately before the triggering transaction.

(B) *Treatment as separate transaction*. The deemed satisfaction and deemed reissuance are treated as transactions separate and apart from the triggering transaction. The deemed satisfaction and reissuance of a member's debt will not cause the debt to be recharacterized as other than debt for Federal income tax purposes.

(4) *Special rules*—(i) *Timing and attributes*. For purposes of applying the matching rule and the acceleration rule to a transaction involving an intercompany obligation (other than a transaction to which paragraph (g)(5) of this section applies)—

(A) Paragraph (c)(6)(i) of this section (treatment of intercompany items if corresponding items are excluded or nondeductible) will not apply to exclude any amount of income or gain attributable to a reduction of the basis of the intercompany obligation pursuant to § 1.1502–36(d), or pursuant to sections 108 and 1017 and § 1.1502–28 or any other provision that adjusts the basis of an

intercompany obligation as a substitute for income or gain;

(B) Paragraph (c)(6)(ii) of this section (limitation on treatment of intercompany income or gain as excluded from gross income) does not apply to prevent any intercompany income or gain from the intercompany obligation from being excluded from gross income;

(C) Any income, gain, deduction, or loss from the intercompany obligation is not subject to section 108(a), section 354, section 355(a)(1), section 1091, or, in the case of an extinguishment of an intercompany obligation in a transaction in which the creditor transfers the obligation to the debtor in exchange for stock in such debtor, section 351(a); and

(D) Section 108(e)(7) does not apply upon the extinguishment of an intercompany obligation.

(ii) *Newly issued obligation in intercompany exchange*. If an intercompany obligation is exchanged (or is deemed exchanged) for a newly issued intercompany obligation and the exchange (or deemed exchange) is not a routine modification of an intercompany obligation (as described in paragraph (g)(3)(i)(B)(*6*) of this section), then the newly issued obligation will be treated for all Federal income tax purposes as having an issue price equal to its fair market value.

(iii) *Off-market issuance*. If an intercompany obligation is issued at a rate of interest that is materially off-market (off-market obligation) with a view to shift items of built-in gain, loss, income, or deduction from the obligation from one member to another member in order to secure a tax benefit (as defined in paragraph (g)(2)(v) of this section), then the intercompany obligation will be treated, for all Federal income tax purposes, as originally issued for its fair market value, and any difference between the amount loaned and the fair market value of the obligation will be treated as transferred between the creditor and the debtor at the time the obligation is issued. For example, if S lends $100 to B in return for an off-market B note valued at $130, and the note is issued with a view to shift items from the note to secure a tax benefit, then the B note will be treated as issued for $130. The $30 difference will be treated as a distribution or capital contribution between S and B (as appropriate) at the time of issuance, and this amount will be reflected in future payments on the note as bond issuance premium. An adjustment to an off-market obligation under this paragraph (g)(4)(iii) will be made without regard to the application of, and in lieu of any adjustment under, section 467 (certain payments for the use of property or services), 482 (allocations among commonly controlled taxpayers), 483 (interest on certain deferred payments), 1274 (determination of issue price for certain debt instruments issued for property), or 7872 (treatment of loans with below-market interest rates).

(iv) *Deferral of loss or deduction with respect to nonmember indebtedness acquired in certain debt exchanges*. If a creditor transfers an intercompany obligation to a nonmember (former intercompany obligation) in exchange for newly issued debt of a nonmember (nonmember debt), and the issue price of the nonmember debt is not determined by reference to its fair market value (for example, the issue price is determined under section 1273(b)(4) or 1274(a) or any other provision of applicable law), then any loss of the creditor otherwise allowable on the subsequent disposition of the nonmember debt, or any comparable tax benefit that would otherwise be available in any other transaction that directly or indirectly results from the disposition of the nonmember debt, is deferred until the date the debtor retires the former intercompany obligation.

(v) *Bad debt reserve*. A member's deduction under section 585 for an addition to its reserve for bad debts with respect to an intercompany obligation is not taken into account, and is not treated as realized for purposes of paragraph (g)(3)(i)(A)(*1*) of this section, until the intercompany obligation is extinguished or becomes an obligation that is not an intercompany obligation.

(5) *Deemed satisfaction and reissuance of obligations becoming intercompany obligations*—(i) *Application of deemed satisfaction and reissuance*—(A) *In general*.

This paragraph (g)(5) applies if an obligation that is not an intercompany obligation becomes an intercompany obligation.

(B) *Exceptions.* This paragraph (g)(5) does not apply to an intercompany obligation if either of the following exceptions apply.

(*1*) *Exception to the application of section 108(e)(4).* The obligation becomes an intercompany obligation by reason of an event described in §1.108–2(e)(2) (exception to the application of section 108(e)(4) in the case of acquisitions by securities dealers); or

(*2*) *Inbound subgroup exception.* The obligation becomes an intercompany obligation in a transaction in which the members of an intercompany obligation subgroup cease to be members of a consolidated group, neither the creditor nor the debtor recognize any income, gain, deduction, or loss with respect to the intercompany obligation, and such members constitute an intercompany obligation subgroup of another consolidated group immediately after the transaction.

(ii) *Deemed satisfaction and reissuance*—(A) *General rule.* If the intercompany obligation is debt of a member, then the debt is treated for all Federal income tax purposes, immediately after it becomes an intercompany obligation, as having been satisfied by the debtor for cash in an amount determined under the principles of §1.108–2(f), and then as having been reissued as a new obligation (with a new holding period but otherwise identical terms) for the same amount of cash. If the intercompany obligation is a security of a member, similar principles apply (with appropriate adjustments) to treat the security, immediately after it becomes an intercompany obligation, as satisfied and reissued by the debtor for cash in an amount equal to its fair market value.

(B) *Treatment as separate transaction.* The deemed satisfaction and deemed reissuance are treated as transactions separate and apart from the transaction in which the debt becomes an intercompany obligation, and the tax consequences of the transaction in which the debt becomes an intercompany obligation must be determined before the deemed satisfaction and reissuance occurs. (For example, if the debt becomes an intercompany obligation in a transaction to which section 351 applies, any limitation imposed by section 362(e) on the basis of the intercompany obligation in the hands of the transferee member is determined before the deemed satisfaction and reissuance.) The deemed satisfaction and reissuance of a member's debt will not cause the debt to be recharacterized as other than debt for Federal income tax purposes.

(6) *Special rules*—(i) *Timing and attributes.* If paragraph (g)(5) of this section applies to an intercompany obligation—

(A) Section 108(e)(4) does not apply;

(B) The attributes of all items taken into account from the satisfaction of the intercompany obligation are determined on a separate entity basis, rather than by treating S and B as divisions of a single corporation; and

(C) Any intercompany gain or loss realized by the creditor is not subject to section 354 or section 1091.

(ii) *Waiver of loss carryovers from separate return limitation years.* Solely for purposes of §1.1502–32(b)(4) and the effect of any election under that provision, any loss taken into account under paragraph (g)(5) of this section by a corporation that becomes a member as a result of the transaction in which the obligation becomes an intercompany obligation is treated as a loss carryover from a separate return limitation year.

(iii) *Deduction of repurchase premium in certain debt exchanges.* If an obligation to which paragraph (g)(5) of this section applies is acquired in exchange for the issuance of an obligation to a nonmember and the issue price of this newly issued obligation is not determined by reference to its fair market value (for example, the issue price is determined under section 1273(b)(4) or 1274(a) or any other provision of applicable law), then, under the principles of §1.163–7(c), any repurchase premium from the deemed satisfaction of the intercompany obligation under paragraph (g)(5)(ii) of this section will be amortized by the debtor over the term of the obligation issued to the nonmember in the same manner as if it were original issue discount and the

obligation to the nonmember had been issued directly by the debtor.

(7) *Examples*—(i) *In general*. For purposes of the examples in this paragraph (g), unless otherwise stated, interest is qualified stated interest under § 1.1273–1(c), and the intercompany obligations are capital assets and are not subject to section 475.

(ii) The application of this section to obligations of members is illustrated by the following examples:

Example 1. Interest on intercompany obligation. (i) *Facts*. On January 1 of year 1, B borrows $100 from S in return for B's note providing for $10 of interest annually at the end of each year, and repayment of $100 at the end of year 5. B fully performs its obligations. Under their separate entity methods of accounting, B accrues a $10 interest deduction annually under section 163, and S accrues $10 of interest income annually under section 61(a)(4) and § 1.446–2.

(ii) *Matching rule*. Under paragraph (b)(1) of this section, the accrual of interest on B's note is an intercompany transaction. Under the matching rule, S takes its $10 of income into account in each of years 1 through 5 to reflect the $10 difference between B's $10 of interest expense taken into account and the $0 recomputed expense. S's income and B's deduction are ordinary items. (Because S's intercompany item and B's corresponding item would both be ordinary on a separate entity basis, the attributes are not redetermined under paragraph (c)(1)(i) of this section.)

(iii) *Original issue discount*. The facts are the same as in paragraph (i) of this *Example 1*, except that B borrows $90 (rather than $100) from S in return for B's note providing for $10 of interest annually and repayment of $100 at the end of year 5. The principles described in paragraph (ii) of this *Example 1* for stated interest also apply to the $10 of original issue discount. Thus, as B takes into account its corresponding expense under section 163(e), S takes into account its intercompany income under section 1272. S's income and B's deduction are ordinary items.

(iv) *Tax-exempt income*. The facts are the same as in paragraph (i) of this *Example 1*, except that B's borrowing from S is allocable under section 265 to B's purchase of state and local bonds to which section 103 applies. The timing of S's income is the same as in paragraph (ii) of this *Example 1*. Under paragraph (c)(4)(i) of this section, the attributes of B's corresponding item of disallowed interest expense control the attributes of S's offsetting intercompany interest income. Paragraph (c)(6) of this section does not prevent the redetermination of S's intercompany item as excluded from gross income because section 265(a)(2) permanently and explicitly disallows B's corresponding deduction and because, under paragraph (g)(4)(i)(B) of this section, paragraph (c)(6)(ii) of this section does not apply to prevent any intercompany income from the B note from being excluded from gross income. Accordingly, S's intercompany income is treated as excluded from gross income.

Example 2. Intercompany obligation becomes nonintercompany obligation. (i) *Facts*. On January 1 of year 1, B borrows $100 from S in return for B's note providing for $10 of interest annually at the end of each year, and repayment of $100 at the end of year 5. As of January 1 of year 3, B has paid the interest accruing under the note and S sells B's note to X for $70, reflecting an increase in prevailing market interest rates. B is never insolvent within the meaning of section 108(d)(3).

(ii) *Deemed satisfaction and reissuance*. Because the B note becomes an obligation that is not an intercompany obligation, the transaction is a triggering transaction under paragraph (g)(3)(i)(A)(*2*) of this section. Under paragraph (g)(3)(ii) of this section, B's note is treated as satisfied and reissued for its fair market value of $70 immediately before S's sale to X. As a result of the deemed satisfaction of the note for less than its adjusted issue price, B takes into account $30 of discharge of indebtedness income under § 1.61–12. On a separate entity basis, S's $30 loss would be a capital loss under section 1271(a)(1). Under the matching rule, however, the attributes of S's intercompany item and B's corresponding item must be redetermined to produce the same effect as if the transaction had occurred between divisions of a single corporation. Under paragraph (c)(4)(i) of this section, the attributes of B's $30 of discharge of indebtedness income control the attributes of S's loss. Thus, S's loss is treated as ordinary loss. B is also treated as reissuing, immediately after the satisfaction, a new note to S with a $70 issue price, a $100 stated redemption price at maturity, and a $70 basis in the hands of S. S is then treated as selling the new note to X for the $70 received by S in the actual transaction. Because S has a basis of $70 in the new note, S recognizes no gain or loss from the sale to X. After the sale, the new note held by X is not an intercompany obligation, it has a $70 issue price, a $100 stated redemption price at maturity, and a $70 basis. The $30 of original issue discount will be taken into account by B and X under sections 163(e) and 1272.

(iii) *Creditor deconsolidation*. The facts are the same as in paragraph (i) of this *Example 2*, except that P sells S's stock to X (rather than S selling B's note to X). Because the B note becomes an obligation that is not an intercompany obligation, the transaction is a triggering transaction under paragraph (g)(3)(i)(A)(*2*) of this section. Under paragraph (g)(3)(ii) of this section, B's note is treated as satisfied and reissued for its $70

fair market value immediately before S becomes a nonmember. The treatment of S's $30 of loss and B's $30 of discharge of indebtedness income is the same as in paragraph (ii) of this *Example 2*. The new note held by S upon deconsolidation is not an intercompany obligation, it has a $70 issue price, a $100 stated redemption price at maturity, and a $70 basis. The $30 of original issue discount will be taken into account by B and S under sections 163(e) and 1272.

(iv) *Debtor deconsolidation*. The facts are the same as in paragraph (i) of this *Example 2*, except that P sells B's stock to X (rather than S selling B's note to X). The results to S and B are the same as in paragraph (iii) of this *Example 2*.

(v) *Subgroup exception*. The facts are the same as in paragraph (i) of this *Example 2*, except that P owns all of the stock of S, S owns all of the stock of B, and P sells all of the S stock to X, the parent of another consolidated group. Because B and S, members of an intercompany obligation subgroup, cease to be members of the P group in a transaction that does not cause either member to recognize an item with respect to the B note, and such members constitute an intercompany obligation subgroup in the X group, P's sale of S stock is not a triggering transaction under paragraph (g)(3)(i)(B)(*8*) of this section, and the note is not treated as satisfied and reissued under paragraph (g)(3)(ii) of this section. After the sale, the note held by S has a $100 issue price, a $100 stated redemption price at maturity, and a $100 basis. The results are the same if the S stock is sold to an individual and the S–B affiliated group elects to file a consolidated return for the period beginning on the day after S and B cease to be members of the P group.

(vi) *Section 338 election*. The facts are the same as paragraph (i) of this *Example 2*, except that P sells S's stock to X and a section 338 election is made with respect to the stock sale. Under section 338, S is treated as selling all of its assets to new S, including the B note, at the close of the acquisition date. The aggregate deemed sales price (within the meaning of §1.338–4) allocated to the B note is $70. Because the B note becomes an obligation that is not an intercompany obligation, the transaction is a triggering transaction under paragraph (g)(3)(i)(A)(*2*) of this section. Under paragraph (g)(3)(ii) of this section, B's note is treated as satisfied and reissued immediately before S's deemed sale to new S for $70, the amount realized with respect to the note (the aggregate deemed sales price allocated to the note under §1.338–6). The results to S and B are the same as in paragraph (ii) of this *Example 2*.

(vii) *Appreciated note*. The facts are the same as in paragraph (i) of this *Example 2*, except that S sells B's note to X for $130 (rather than $70), reflecting a decline in prevailing market interest rates. Because the B note becomes an obligation that is not an intercompany obligation, the transaction is a triggering transaction under paragraph (g)(3)(i)(A)(*2*) of this section. Under paragraph (g)(3)(ii) of this section, B's note is treated as satisfied and reissued for its fair market value of $130 immediately before S's sale to X. As a result of the deemed satisfaction of the note for more than its adjusted issue price, B takes into account $30 of repurchase premium under §1.163–7(c). On a separate entity basis, S's $30 gain would be a capital gain under section 1271(a)(1). Under the matching rule, however, the attributes of S's intercompany item and B's corresponding item must be redetermined to produce the same effect as if the transaction had occurred between divisions of a single corporation. Under paragraph (c)(4)(i) of this section, the attributes of B's premium deduction control the attributes of S's gain. Accordingly, S's gain is treated as ordinary income. B is also treated as reissuing, immediately after the satisfaction, a new note to S with a $130 issue price, $100 stated redemption price at maturity, and $130 basis in the hands of S. S is then treated as selling the new note to X for the $130 received by S in the actual transaction. Because S has a basis of $130 in the new note, S recognizes no gain or loss from the sale to X. After the sale, the new note held by X is not an intercompany obligation, it has a $130 issue price, a $100 stated redemption price at maturity, and a $130 basis. The treatment of B's $30 of bond issuance premium under the new note is determined under §1.163–13.

(viii) *Deferral of loss or deduction with respect to nonmember indebtedness acquired in debt exchange*. The facts are the same as in paragraph (i) of this *Example 2*, except that S sells B's note to X for a non-publicly traded X note with an issue price and face amount of $100 and a fair market value of $70, and that, subsequently, S sells the X note for $70. Because the B note becomes an obligation that is not an intercompany obligation, the transaction is a triggering transaction under paragraph (g)(3)(i)(A)(*2*) of this section. Under paragraph (g)(3)(ii) of this section, B's note is treated as satisfied and reissued immediately before S's sale to X for $100, the amount realized with respect to the note (determined under section 1274). As a result of the deemed satisfaction, neither S nor B take into account any items of income, gain, deduction, or loss. S is then treated as selling the new B note to X for the X note received by S in the actual transaction. Because S has a basis of $100 in the new note, S recognizes no gain or loss from the sale to X. After the sale, the new B note held by X is not an intercompany obligation, it has a $100 issue price, a $100 stated redemption price at maturity, and a $100 basis. S also

holds an X note with a basis of $100 but a fair market value of $70. When S disposes of the X note, S's loss on the disposition is deferred under paragraph (g)(4)(iv) of this section, until B retires its note (the former intercompany obligation in the hands of X).

Example 3. Loss or bad debt deduction with respect to intercompany obligation. (i) *Facts.* On January 1 of year 1, B borrows $100 from S in return for B's note providing for $10 of interest annually at the end of each year, and repayment of $100 at the end of year 5. On January 1 of year 3, the fair market value of the B note has declined to $60 and S sells the B note to P for property with a fair market value of $60. B is never insolvent within the meaning of section 108(d)(3). The B note is not a security within the meaning of section 165(g)(2).

(ii) *Deemed satisfaction and reissuance.* Because S realizes an amount of loss from the assignment of the B note, the transaction is a triggering transaction under paragraph (g)(3)(i)(A)(*1*) of this section. Under paragraph (g)(3)(ii) of this section, B's note is treated as satisfied and reissued for its fair market value of $60 immediately before S's sale to P. As a result of the deemed satisfaction of the note for less than its adjusted issue price ($100), B takes into account $40 of discharge of indebtedness income under §1.61–12. On a separate entity basis, S's $40 loss would be a capital loss under section 1271(a)(1). Under the matching rule, however, the attributes of S's intercompany item and B's corresponding item must be redetermined to produce the same effect as if the transaction had occurred between divisions of a single corporation. Under paragraph (c)(4)(i) of this section, the attributes of B's $40 of discharge of indebtedness income control the attributes of S's loss. Thus, S's loss is treated as ordinary loss. B is also treated as reissuing, immediately after the satisfaction, a new note to S with a $60 issue price, $100 stated redemption price at maturity, and $60 basis in the hands of S. S is then treated as selling the new note to P for the $60 of property received by S in the actual transaction. Because S has a basis of $60 in the new note, S recognizes no gain or loss from the sale to P. After the sale, the note is an intercompany obligation, it has a $60 issue price and a $100 stated redemption price at maturity, and the $40 of original issue discount will be taken into account by B and P under sections 163(e) and 1272.

(iii) *Partial bad debt deduction.* The facts are the same as in paragraph (i) of this *Example 3*, except that S claims a $40 partial bad debt deduction under section 166(a)(2) (rather than selling the note to P). Because S realizes a deduction from a transaction comparable to an assignment of the B note, the transaction is a triggering transaction under paragraph (g)(3)(i)(A)(*1*) of this section. Under paragraph (g)(3)(ii) of this section, B's note is treated as satisfied and reissued for its fair market value of $60 immediately before section 166(a)(2) applies. The treatment of S's $40 loss and B's $40 of discharge of indebtedness income are the same as in paragraph (ii) of this *Example 3*. After the reissuance, S has a basis of $60 in the new note. Accordingly, the application of section 166(a)(2) does not result in any additional deduction for S. The $40 of original issue discount on the new note will be taken into account by B and S under sections 163(e) and 1272.

(iv) *Insolvent debtor.* The facts are the same as in paragraph (i) of this *Example 3*, except that B is insolvent within the meaning of section 108(d)(3) at the time that S sells the note to P. As explained in paragraph (ii) of this *Example 3*, the transaction is a triggering transaction and the B note is treated as satisfied and reissued for its fair market value of $60 immediately before S's sale to P. On a separate entity basis, S's $40 loss would be capital, B's $40 income would be excluded from gross income under section 108(a), and B would reduce attributes under section 108(b) or section 1017 (see also §1.1502–28). However, under paragraph (g)(4)(i)(C) of this section, section 108(a) does not apply to characterize B's income as excluded from gross income. Accordingly, the attributes of S's loss and B's income are redetermined in the same manner as in paragraph (ii) of this *Example 3*.

Example 4. Intercompany nonrecognition transactions. (i) *Facts.* On January 1 of year 1, B borrows $100 from S in return for B's note providing for $10 of interest annually at the end of each year, and repayment of $100 at the end of year 5. As of January 1 of year 3, B has fully performed its obligations, but the note's fair market value is $130, reflecting a decline in prevailing market interest rates. On January 1 of year 3, S transfers the note and other assets to a newly formed corporation, Newco, for all of Newco's common stock in an exchange to which section 351 applies.

(ii) *No deemed satisfaction and reissuance.* Because the assignment of the B note is an exchange to which section 351 applies and neither S nor B recognize gain or loss, the transaction is not a triggering transaction under paragraph (g)(3)(i)(B)(*1*) of this section, and the note is not treated as satisfied and reissued under paragraph (g)(3)(ii) of this section.

(iii) *Receipt of other property.* The facts are the same as in paragraph (i) of this *Example 4*, except that the other assets transferred to Newco have a basis of $100 and a fair market value of $260, and S receives, in addition to Newco common stock, $15 of cash. Because S would recognize $15 of gain under section 351(b), the assignment of the B note is a triggering transaction under paragraph

(g)(3)(i)(A)(*1*) of this section. Under paragraph (g)(3)(ii) of this section, B's note is treated as satisfied and reissued for its fair market value of $130 immediately before the transfer to Newco. As a result of the deemed satisfaction of the note for more than its adjusted issue price, B takes into account $30 of repurchase premium under § 1.163–7(c). On a separate entity basis, S's $30 gain would be a capital gain under section 1271(a)(1). Under the matching rule, however, the attributes of S's intercompany item and B's corresponding item must be redetermined to produce the same effect as if the transaction had occurred between divisions of a single corporation. Under paragraph (c)(4)(i) of this section, the attributes of B's premium deduction control the attributes of S's gain. Accordingly, S's gain is treated as ordinary income. B is also treated as reissuing, immediately after the satisfaction, a new note to S with a $130 issue price, $100 stated redemption price at maturity, and $130 basis in the hands of S. S is then treated as transferring the new note to Newco for the Newco stock and cash received by S in the actual transaction. Because S has a basis of $130 in the new B note, S recognizes no gain or loss with respect to the transfer of the note in the section 351 exchange, and S recognizes $10 of gain with respect to the transfer of the other assets under section 351(b). After the transfer, the note has a $130 issue price and a $100 stated redemption price at maturity. The treatment of B's $30 of bond issuance premium under the new note is determined under § 1.163–13.

(iv) *Transferee loss subject to limitation.* The facts are the same as in paragraph (i) of this *Example 4*, except that T is a member with a loss from a separate return limitation year that is subject to limitation under § 1.1502–21(c) (a SRLY loss), and on January 1 of year 3, S transfers the assets and the B note to T in an exchange to which section 351 applies. Because the transferee, T, has a loss that is subject to a limitation, the assignment of the B note is a triggering transaction under paragraph (g)(3)(i)(A)(*1*) of this section (the exception in paragraph (g)(3)(i)(B)(*1*) of this section does not apply). Under paragraph (g)(3)(ii) of this section, B's note is treated as satisfied and reissued for its fair market value, immediately before S's transfer to T. As a result of the deemed satisfaction of the note for more than its adjusted issue price, B takes into account $30 of repurchase premium under § 1.163–7(c). On a separate entity basis, S's $30 gain would be a capital gain under section 1271(a)(1). Under the matching rule, however, the attributes of S's intercompany item and B's corresponding item must be redetermined to produce the same effect as if the transaction had occurred between divisions of a single corporation. Under paragraph (c)(4)(i) of this section, the attributes of B's premium deduction control the attributes of S's gain. Accordingly, S's gain is treated as ordinary income. B is also treated as reissuing, immediately after the satisfaction, a new note to S with a $130 issue price, $100 stated redemption price at maturity, and $130 basis in the hands of S. The treatment of B's $30 of bond issuance premium under the new note is determined under § 1.163–13. S is then treated as transferring the new note to T as part of the section 351 exchange. Because T will have a fair market value basis in the reissued B note immediately after the exchange, T's intercompany item from the subsequent retirement of the B note will not reflect any of S's built-in gain (and the amount of T's SRLY loss that may be absorbed by such item will be limited to any appreciation in the B note accruing after the exchange).

(v) *Intercompany obligation transferred in section 332 transaction.* The facts are the same as in paragraph (i) of this *Example 4*, except that S transfers the B note to P in complete liquidation under section 332. Because the transaction is an exchange to which section 332 and section 337(a) applies, and neither S nor B recognize gain or loss, the transaction is not a triggering transaction under paragraph (g)(3)(i)(B)(*1*) of this section, and the note is not treated as satisfied and reissued under paragraph (g)(3)(ii) of this section.

Example 5. Assumption of intercompany obligation. (i) *Facts.* On January 1 of year 1, B borrows $100 from S in return for B's note providing for $10 of interest annually at the end of each year, and repayment of $100 at the end of year 5. The note is fully recourse and is incurred for use in Business Z. As of January 1 of year 3, B has fully performed its obligations, but the note's fair market value is $110 reflecting a decline in prevailing market interest rates. Business Z has a fair market value of $95. On January 1 of year 3, B transfers all of the assets of Business Z and $15 of cash (substantially all of B's assets) to member T in exchange for the assumption by T of all of B's obligations under the note in a transaction in which gain or loss is recognized under section 1001. The terms and conditions of the note are not modified in connection with the sales transaction, the transaction does not result in a change in payment expectations, and no amount of income, gain, deduction, or loss is recognized by S, B, or T with respect to the note.

(ii) *No deemed satisfaction and reissuance.* Because all of B's obligations under the B note are assumed by T in connection with the sale of the Business Z assets, the assignment of B's obligations under the note is not a triggering transaction under paragraph (g)(3)(i)(B)(*2*) of this section, and the note is not treated as satisfied and reissued under paragraph (g)(3)(ii) of this section.

Example 6. Extinguishment of intercompany obligation. (i) *Facts.* On January 1 of year 1, B borrows $100 from S in return for B's note

providing for $10 of interest annually at the end of each year, and repayment of $100 at the end of year 20. The note is a security within the meaning of section 351(d)(2). As of January 1 of year 3, B has fully performed its obligations, but the fair market value of the B note is $130, reflecting a decline in prevailing market interest rates, and S transfers the note to B in exchange for $130 of B stock in a transaction to which both section 351 and section 354 applies.

(ii) *No deemed satisfaction and reissuance.* As a result of the satisfaction of the note for more than its adjusted issue price, B takes into account $30 of repurchase premium under §1.163–7(c). Although the transfer of the B note is a transaction to which both section 351 and section 354 applies, under paragraph (g)(4)(i)(C) of this section, any gain or loss from the intercompany obligation is not subject to either section 351(a) or section 354, and therefore, S has a $30 gain under section 1001. Because the note is extinguished in a transaction in which the adjusted issue price of the note is equal to the creditor's basis in the note, and the debtor's and creditor's items offset in amount, the transaction is not a triggering transaction under paragraph (g)(3)(i)(B)(*5*) of this section, and the note is not treated as satisfied and reissued under paragraph (g)(3)(ii) of this section. On a separate entity basis, S's $30 gain would be a capital gain under section 1271(a)(1). Under the matching rule, however, the attributes of S's intercompany item and B's corresponding item must be redetermined to produce the same effect as if the transaction had occurred between divisions of a single corporation. Under paragraph (c)(4)(i) of this section, the attributes of B's premium deduction control the attributes of S's gain. Accordingly, S's gain is treated as ordinary income. Under paragraph (g)(4)(i)(D) of this section, section 108(e)(7) does not apply upon the extinguishment of the B note, and therefore, the B stock received by S in the exchange will not be treated as section 1245 property.

Example 7. Exchange of intercompany obligations. (i) *Facts.* On January 1 of year 1, B borrows $100 from S in return for B's note providing for $10 of interest annually at the end of each year, and repayment of $100 at the end of year 20. As of January 1 of year 3, B has fully performed its obligations and, pursuant to a recapitalization to which section 368(a)(1)(E) applies, B issues a new note to S in exchange for the original B note. The new B note has an issue price, stated redemption price at maturity, and stated principal amount of $100, but contains terms that differ sufficiently from the terms of the original B note to cause a realization event under §1.1001–3. The original B note and the new B note are both securities (within the meaning of section 354(a)(1)).

(ii) *No deemed satisfaction and reissuance.* Because the original B note is extinguished in exchange for a newly issued B note and the issue price of the new B note is equal to both the adjusted issue price of the original B note and S's basis in the original B note, the transaction is not a triggering transaction under paragraph (g)(3)(i)(B)(*6*) of this section, and the note is not treated as satisfied and reissued under paragraph (g)(3)(ii) of this section. B has neither income from discharge of indebtedness under section 108(e)(10) nor a deduction for repurchase premium under §1.163–7(c). Although the exchange of the original B note for the new B note is a transaction to which section 354 applies, under paragraph (g)(4)(i)(C) of this section, any gain or loss from the intercompany obligation is not subject to section 354. Under section 1001, S has no gain or loss from the exchange of notes.

Example 8. Tax benefit rule. (i) *Facts.* On January 1 of year 1, B borrows $100 from S in return for B's note providing for $10 of interest annually at the end of each year, and repayment of $100 at the end of year 5. As of January 1 of year 3, B has fully performed its obligations, but the note's fair market value has depreciated, reflecting an increase in prevailing market interest rates. On that date, S transfers the B note to member T as part of an exchange for T common stock which is intended to qualify for nonrecognition treatment under section 351 but with a view to sell the T stock at a reduced gain. On February 1 of year 4, all of the stock of T is sold at a reduced gain.

(ii) *Deemed satisfaction and reissuance.* Because the assignment of the B note does not occur within 12 months of the sale of T stock, paragraph (g)(3)(i)(B)(*1*)(*vi*) of this section does not apply to treat the assignment as a triggering transaction. However, because the assignment of the B note was engaged in with a view to shift built-in loss from the obligation in order to secure a tax benefit that the group or its members would not otherwise enjoy, under paragraph (g)(3)(i)(C) of this section, the assignment of the B note is a triggering transaction to which paragraph (g)(3)(ii) of this section applies. Under paragraph (g)(3)(ii) of this section, B's note is treated as satisfied and reissued for its fair market value, immediately before S's transfer to T. As a result of the deemed satisfaction of the note for less than its adjusted issue price, B takes into account discharge of indebtedness income and S has a corresponding loss which is treated as ordinary loss. B is also treated as reissuing, immediately after the deemed satisfaction, a new note to S with an issue price and basis equal to its fair market value. S is then treated as transferring the new note to T as part of the section 351 exchange. Because S's basis in the T stock received with respect to the transferred B note is equal to its fair

market value, S's gain with respect to the T stock will not reflect any of the built-in loss attributable to the B note. (This example does not address common law doctrines or other authorities that might apply to recharacterize the transaction or to otherwise affect the tax treatment of the transaction.)

Example 9. Issuance at off-market rate of interest. (i) *Facts.* T is a member with a SRLY loss. T's sole shareholder, P, borrows an amount of cash from T in return for a P note that provides for a materially above market rate of interest. The P note is issued with a view to generate additional interest income to T over the term of the note to facilitate the absorption of T's SRLY loss.

(ii) *With a view.* Because the P note is issued with a view to shift interest income from the off-market obligation in order to secure a tax benefit that the group or its members would not otherwise enjoy, under paragraph (g)(4)(iii) of this section, the intercompany obligation is treated, for all Federal income tax purposes, as originally issued for its fair market value so T is treated as purchasing the note at a premium. The difference between the amount loaned and the fair market value of the obligation is treated as transferred from P to T as a capital contribution at the time the note is issued. Throughout the term of the note, T takes into account interest income and bond premium and P takes into account interest deduction and bond issuance premium under generally applicable Internal Revenue Code sections. The adjustment under paragraph (g)(4)(iii) of this section is made without regard to the application of, and in lieu of any adjustment under, section 482 or 1274.

Example 10. Nonintercompany obligation becomes intercompany obligation. (i) *Facts.* On January 1 of year 1, B borrows $100 from X in return for B's note providing for $10 of interest annually at the end of each year, and repayment of $100 at the end of year 5. As of January 1 of year 3, B has fully performed its obligations, but the note's fair market value is $70, reflecting an increase in prevailing market interest rates. On January 1 of year 3, P buys all of X's stock. B is solvent within the meaning of section 108(d)(3).

(ii) *Deemed satisfaction and reissuance.* Under paragraph (g)(5)(ii) of this section, B's note is treated as satisfied for $70 (determined under the principles of § 1.108–2(f)(2)) immediately after it becomes an intercompany obligation. Both X's $30 capital loss (under section 1271(a)(1)) and B's $30 of discharge of indebtedness income (under § 1.61–12) are taken into account in determining consolidated taxable income for year 3. Under paragraph (g)(6)(i)(B) of this section, the attributes of items resulting from the satisfaction are determined on a separate entity basis. But see section 382 and § 1.1502–15 (as appropriate). B is also treated as reissuing a new note to X. The new note is an intercompany obligation, it has a $70 issue price and $100 stated redemption price at maturity, and the $30 of original issue discount will be taken into account by B and X in the same manner as provided in paragraph (iii) of *Example 1* of this paragraph (g)(7).

(iii) *Amortization of repurchase premium.* The facts are the same as in paragraph (i) of this *Example 10,* except that on January 1 of year 3, the B note has a fair market value of $130 and rather than P purchasing the X stock, P purchases the B note from X by issuing its own note. The P note has an issue price, stated redemption price at maturity, stated principal amount, and fair market value of $130. Under paragraph (g)(5)(ii) of this section, B's note is treated as satisfied for $130 (determined under the principles of § 1.108–2(f)(1)) immediately after it becomes an intercompany obligation. As a result of the deemed satisfaction of the note, P has no gain or loss and B has $30 of repurchase premium. Under paragraph (g)(6)(iii) of this section, B's $30 of repurchase premium from the deemed satisfaction is amortized by B over the term of the newly issued P note in the same manner as if it were original issue discount and the newly issued P note had been issued directly by B. B is also treated as reissuing a new note to P. The new note is an intercompany obligation, it has a $130 issue price and $100 stated redemption price at maturity, and the treatment of B's $30 of bond issuance premium under the new B note is determined under § 1.163–13.

(iv) *Election to file consolidated returns.* Assume instead that B borrows $100 from S during year 1, but the P group does not file consolidated returns until year 3. Under paragraph (g)(5)(ii) of this section, B's note is treated as satisfied and reissued as a new note immediately after the note becomes an intercompany obligation. The satisfaction and reissuance are deemed to occur on January 1 of year 3, for the fair market value of the obligation (determined under the principles of § 1.108–2(f)(2)) at that time.

Example 11. Notional principal contracts. (i) *Facts.* On April 1 of year 1, M1 enters into a contract with counterparty M2 under which, for a term of five years, M1 is obligated to make a payment to M2 each April 1, beginning in year 2, in an amount equal to the London Interbank Offered Rate (LIBOR), as determined by reference to LIBOR on the day each payment is due, multiplied by a $1,000 notional principal amount. M2 is obligated to make a payment to M1 each April 1, beginning in year 2, in an amount equal to 8 percent multiplied by the same notional principal amount. LIBOR is 7.80 percent on April 1 of year 2, and therefore, M2 owes $2 to M1.

(ii) *Matching rule.* Under § 1.446–3(d), the net income (or net deduction) from a notional principal contract for a taxable year is included in (or deducted from) gross income.

Under § 1.446–3(e), the ratable daily portion of M2's obligation to M1 as of December 31 of year 1 is $1.50 ($2 multiplied by 275/365). Under the matching rule, M1's net income for year 1 of $1.50 is taken into account to reflect the difference between M2's net deduction of $1.50 taken into account and the $0 recomputed net deduction. Similarly, the $.50 balance of the $2 of net periodic payments made on April 1 of year 2 is taken into account for year 2 in M1's and M2's net income and net deduction from the contract. In addition, the attributes of M1's intercompany income and M2's corresponding deduction are redetermined to produce the same effect as if the transaction had occurred between divisions of a single corporation. Under paragraph (c)(4)(i) of this section, the attributes of M2's corresponding deduction control the attributes of M1's intercompany income. (Although M1 is the selling member with respect to the payment on April 1 of year 2, it might be the buying member in a subsequent period if it owes the net payment.)

(iii) *Dealer*. The facts are the same as in paragraph (i) of this *Example 11*, except that M2 is a dealer in securities, and the contract with M1 is not inventory in the hands of M2. Under section 475, M2 must mark its securities to fair market value at year-end. Assume that under section 475, M2's loss from marking to fair market value the contract with M1 is $10. Because M2 realizes an amount of loss from the mark to fair market value of the contract, the transaction is a triggering transaction under paragraph (g)(3)(i)(A)(*1*) of this section. Under paragraph (g)(3)(ii) of this section, M2 is treated as making a $10 payment to M1 to terminate the contract immediately before a new contract is treated as reissued with an up-front payment by M1 to M2 of $10. M1's $10 of income from the termination payment is taken into account under the matching rule to reflect M2's deduction under § 1.446–3(h). The attributes of M1's intercompany income and M2's corresponding deduction are redetermined to produce the same effect as if the transaction had occurred between divisions of a single corporation. Under paragraph (c)(4)(i) of this section, the attributes of M2's corresponding deduction control the attributes of M1's intercompany income. Accordingly, M1's income is treated as ordinary income. Under § 1.446–3(f), the deemed $10 upfront payment by M1 to M2 in connection with the issuance of a new contract is taken into account over the term of the new contract in a manner reflecting the economic substance of the contract (for example, allocating the payment in accordance with the forward rates of a series of cash-settled forward contracts that reflect the specified index and the $1,000 notional principal amount). (The timing of taking items into account is the same if M1, rather than M2, is the dealer subject to the mark-to-market requirement of section 475 at year-end. However in this case, because the attributes of the corresponding deduction control the attributes of the intercompany income, M1's income from the deemed termination payment from M2 might be ordinary or capital). Under paragraph (g)(3)(ii)(A) of this section, section 475 does not apply to mark the notional principal contract to fair market value after its deemed satisfaction and reissuance.

(8) *Effective/applicability date*. The rules of this paragraph (g) apply to transactions involving intercompany obligations occurring in consolidated return years beginning on or after December 24, 2008.

(h) *Anti-avoidance rules*—(1) *In general*. If a transaction is engaged in or structured with a principal purpose to avoid the purposes of this section (including, for example, by avoiding treatment as an intercompany transaction), adjustments must be made to carry out the purposes of this section.

(2) *Examples*. The anti-avoidance rules of this paragraph (h) are illustrated by the following examples. The examples set forth below do not address common law doctrines or other authorities that might apply to recast a transaction or to otherwise affect the tax treatment of a transaction. Thus, in addition to adjustments under this paragraph (h), the Commissioner can, for example, apply the rules of section 269 or § 1.701–2 to disallow a deduction or to recast a transaction.

Example 1. Sale of a partnership interest. (a) *Facts*. S owns land with a $10 basis and $100 value. B has net operating losses from separate return limitation years (SRLYs) subject to limitation under § 1.1502–21(c). Pursuant to a plan to absorb the losses without limitation by the SRLY rules, S transfers the land to an unrelated, calendar-year partnership in exchange for a 10% interest in the capital and profits of the partnership in a transaction to which section 721 applies. The partnership does not have a section 754 election in effect. S later sells its partnership interest to B for $100. In the following year, the partnership sells the land to X for $100. Because the partnership does not have a section 754 election in effect, its $10 basis in the land does not reflect B's $100 basis in the partnership interest. Under section 704(c), the partnership's $90 built-in gain is allocated to B, and B's basis in the partnership interest increases to $190 under section 705. In a later year, B sells the partnership interest to a nonmember for $100.

(b) *Adjustments.* Under §1.1502–21(c), the partnership's $90 built-in gain allocated to B ordinarily increases the amount of B's SRLY limitation, and B's $90 loss from its sale of the partnership interest ordinarily is not subject to limitation under the SRLY rules. Because the contribution of property to the partnership and the sale of the partnership interest were part of a plan a principal purpose of which was to achieve a reduction in consolidated tax liability by creating offsetting gain and loss for B while deferring S's intercompany gain, B's allocable share of the partnership's gain from its sale of the land is treated under paragraph (h)(1) of this section as not increasing the amount of B's SRLY limitation.

Example 2. Transitory status as an intercompany obligation. (a) *Facts.* P historically has owned 70% of X's stock and the remaining 30% is owned by unrelated shareholders. On January 1 of Year 1, S borrows $100 from X in return for S's note requiring $10 of interest annually at the end of each year, and repayment of $100 at the end of Year 20. As of January 1 of Year 3, the P group has substantial net operating loss carryovers, and the fair market value of S's note falls to $70 due to an increase in prevailing market interest rates. X is not permitted under section 166(a)(2) to take into account a $30 loss with respect to the note. Pursuant to a plan to permit X to take into account its $30 loss without disposing of the note, P acquires an additional 10% of X's stock, causing X to become a member, and P subsequently resells the 10% interest. X's $30 loss with respect to the note is a net unrealized built-in loss within the meaning of §1.1502–15.

(b) *Adjustments.* Under paragraph (g)(4) of this section, X ordinarily would take into account its $30 loss as a result of the note becoming an intercompany obligation, and S would take into account $30 of discharge of indebtedness income. Under §1.1502–22, X's loss is not combined with items of the other members and the loss would be carried to X's separate return years as a result of X becoming a nonmember. However, the transitory status of S's indebtedness to X as an intercompany obligation is structured with a principal purpose to accelerate the recognition of X's loss. Thus, S's note is treated under paragraph (h)(1) of this section as not becoming an intercompany obligation.

Example 3. Corporate mixing bowl. (a) *Facts.* M1 and M2 are subsidiaries of P. M1 operates a manufacturing business on land it leases from M2. The land is the only asset held by M2. P intends to dispose of the M1 business, including the land owned by M2; P's basis in the M1 stock is equal to the stock's fair market value. M2's land has a value of $20 and a basis of $0 and P has a $0 basis in the stock of M2. In Year 1, with a principal purpose of avoiding gain from the sale of the land (by transferring the land to M1 with a carry-over basis without affecting P's basis in the stock of M1 or M2), M1 and M2 form corporation T; M1 contributes cash in exchange for 80% of the T stock and M2 contributes the land in exchange for 20% of the stock. In Year 3, T liquidates, distributing $20 cash to M2 and the land (plus $60 cash) to M1. Under §1.1502–34, section 332 applies to both M1 and M2. Under section 337, T recognizes no gain or loss from its liquidating distribution of the land to M1. T has neither gain nor loss on its distribution of cash to M2. In Year 4, P sells all of the stock of M1 to X and liquidates M2.

(b) *Adjustments.* A principal purpose for the formation and liquidation of T was to avoid gain from the sale of M2's land. Thus, under paragraph (h)(1) of this section, M2 must take $20 of gain into account when the stock of M1 is sold to X.

Example 4. Partnership mixing bowl. (a) *Facts.* M1 owns a self-created intangible asset with a $0 basis and a fair market value of $100. M2 owns land with a basis of $100 and a fair market value of $100. In Year 1, with a principal purpose of creating basis in the intangible asset (which would be eligible for amortization under section 197), M1 and M2 form partnership PRS; M1 contributes the intangible asset and M2 contributes the land. X, an unrelated person, contributes cash to PRS in exchange for a substantial interest in the partnership. PRS uses the contributed assets in legitimate business activities. Five years and six months later, PRS liquidates, distributing the land to M1, the intangible to M2, and cash to X. The group reports no gain under sections 707(a)(2)(B) and 737(a) and claims that M2's basis in the intangible asset is $100 under section 732 and that the asset is eligible for amortization under section 197.

(b) *Adjustments.* A principal purpose of the formation and liquidation of PRS was to create additional amortization without an offsetting increase in consolidated taxable income by avoiding treatment as an intercompany transaction. Thus, under paragraph (h)(1) of this section, appropriate adjustments must be made.

Example 5. Sale and leaseback. (a) *Facts.* S operates a factory with a $70 basis and $100 value, and has loss carryovers from SRLYs. Pursuant to a plan to take into account the $30 unrealized gain while continuing to operate the factory, S sells the factory to X for $100 and leases it back on a long-term basis. In the transaction, a substantial interest in the factory is transferred to X. The sale and leaseback are not recharacterized under general principles of Federal income tax law. As a result of S's sale to X, the $30 gain is taken into account and increases S's SRLY limitation.

(b) *No adjustments.* Although S's sale was pursuant to a plan to accelerate the $30 gain, it is not subject to adjustment under paragraph (h)(1) of this section. The sale is not treated as engaged in or structured with a

principal purpose to avoid the purposes of this section.

(i) [Reserved]

(j) *Miscellaneous operating rules.* For purposes of this section—

(1) *Successor assets.* Any reference to an asset includes, as the context may require, a reference to any other asset the basis of which is determined, directly or indirectly, in whole or in part, by reference to the basis of the first asset.

(2) *Successor persons*—(i) *In general.* Any reference to a person includes, as the context may require, a reference to a predecessor or successor. For this purpose, a predecessor is a transferor of assets to a transferee (the successor) in a transaction—

(A) To which section 381(a) applies;

(B) In which substantially all of the assets of the transferor are transferred to members in a complete liquidation;

(C) In which the successor's basis in assets is determined (directly or indirectly, in whole or in part) by reference to the basis of the transferor, but the transferee is a successor only with respect to the assets the basis of which is so determined; or

(D) Which is an intercompany transaction, but only with respect to assets that are being accounted for by the transferor in a prior intercompany transaction.

(ii) *Intercompany items.* If the assets of a predecessor are acquired by a successor member, the successor succeeds to, and takes into account (under the rules of this section), the predecessor's intercompany items. If two or more successor members acquire assets of the predecessor, the successors take into account the predecessor's intercompany items in a manner that is consistently applied and reasonably carries out the purposes of this section and applicable provisions of law.

(3) *Multiple triggers.* If more than one corresponding item can cause an intercompany item to be taken into account under the matching rule, the intercompany item is taken into account in connection with the corresponding item most consistent with the treatment of members as divisions of a single corporation. For example, if S sells a truck to B, its intercompany gain from the sale is not taken into account by reference to B's depreciation if the depreciation is capitalized under section 263A as part of B's cost for a building; instead, S's gain relating to the capitalized depreciation is taken into account when the building is sold or as it is depreciated. Similarly, if B purchases appreciated land from S and transfers the land to a lower-tier member in exchange for stock, thereby duplicating the basis of the land in the basis of the stock, items with respect to both the stock and the land can cause S's intercompany gain to be taken into account; if the lower-tier member becomes a nonmember as a result of the sale of its stock, the attributes of S's intercompany gain are determined with respect to the land rather than the stock.

(4) *Multiple or successive intercompany transactions.* If a member's intercompany item or corresponding item affects the accounting for more than one intercompany transaction, appropriate adjustments are made to treat all of the intercompany transactions as transactions between divisions of a single corporation. For example, if S sells property to M, and M sells the property to B, then S, M, and B are treated as divisions of a single corporation for purposes of applying the rules of this section. Similar principles apply with respect to intercompany transactions that are part of the same plan or arrangement. For example, if S sells separate properties to different members as part of the same plan or arrangement, all of the participating members are treated as divisions of a single corporation for purposes of determining the attributes (which might also affect timing) of the intercompany items and corresponding items from each of the properties.

(5) *Acquisition of group*—(i) *Scope.* This paragraph (j)(5) applies only if a consolidated group (the terminating group) ceases to exist as a result of—

(A) The acquisition of either the assets of the common parent of the terminating group in a reorganization described in section 381(a)(2), or the stock of the common parent of the terminating group; or

(B) The application of the principles of § 1.1502–75(d)(2) or (d)(3).

(ii) *Application*. If the terminating group ceases to exist under circumstances described in paragraph (j)(5)(i) of this section, the surviving group is treated as the terminating group for purposes of applying this section to the intercompany transactions of the terminating group. For example, intercompany items and corresponding items from intercompany transactions between members of the terminating group are taken into account under the rules of this section by the surviving group. This treatment does not apply, however, to members of the terminating group that are not members of the surviving group immediately after the terminating group ceases to exist (for example, under section 1504(a)(3) relating to reconsolidation, or section 1504(c) relating to includible insurance companies).

(6) *Former common parent treated as continuation of group*. If a group terminates because the common parent is the only remaining member, the common parent succeeds to the treatment of the terminating group for purposes of applying this section so long as it neither becomes a member of an affiliated group filing separate returns nor becomes a corporation described in section 1504(b). For example, if the only subsidiary of the group liquidates into the common parent in a complete liquidation to which section 332 applies, or the common parent merges into the subsidiary and the subsidiary is treated as the common parent's successor under paragraph (j)(2)(i) of this section, the taxable income of the surviving corporation is treated as the group's consolidated taxable income in which the intercompany and corresponding items must be included. See § 1.267(f)–1 for additional rules applicable to intercompany losses or deductions.

(7) *Becoming a nonmember*. For purposes of this section, a member is treated as becoming a nonmember if it has a separate return year (including another group's consolidated return year). A member is not treated as having a separate return year if its items are treated as taken into account in computing the group's consolidated taxable income under paragraph (j)(5) or (6) of this section.

(8) *Recordkeeping*. Intercompany and corresponding items must be reflected on permanent records (including work papers). See also section 6001, requiring records to be maintained. The group must be able to identify from these permanent records the amount, location, timing, and attributes of the items, so as to permit the application of the rules of this section for each year.

(9) *Examples*. The operating rules of this paragraph (j) are illustrated generally throughout this section, and by the following examples.

Example 1. Intercompany sale followed by section 351 transfer to member. (a) *Facts*. S holds land for investment with a basis of $70. On January 1 of Year 1, S sells the land to M for $100. M also holds the land for investment. On July 1 of Year 3, M transfers the land to B in exchange for all of B's stock in a transaction to which section 351 applies. Under section 358, M's basis in the B stock is $100. B holds the land for sale to customers in the ordinary course of business and, under section 362(b), B's basis in the land is $100. On December 1 of Year 5, M sells 20% of the B stock to X for $22. In an unrelated transaction on July 1 of Year 8, B sells 20% of the land for $22.

(b) *Definitions*. Under paragraph (b)(1) of this section, S's sale of the land to M and M's transfer of the land to B are both intercompany transactions. S is the selling member and M is the buying member in the first intercompany transaction, and M is the selling member and B is the buying member in the second intercompany transaction. M has no intercompany items under paragraph (b)(2) of this section. Because B acquired the land in an intercompany transaction, B's items from the land are corresponding items to be taken into account under this section. Under the successor asset rule of paragraph (j)(1) of this section, references to the land include references to M's B stock. Under the successor person rule of paragraph (j)(2) of this section, references to M include references to B with respect to the land.

(c) *Timing and attributes resulting from the stock sale*. Under paragraph (c)(3) of this section, M is treated as owning and selling B's stock for purposes of the matching rule even though, as divisions, M could not own and sell stock in B. Under paragraph (j)(3) of this section, both M's B stock and B's land can cause S's intercompany gain to be taken into account under the matching rule. Thus, S takes $6 of its gain into account in Year 5 to reflect the $6 difference between M's $2 gain taken into account from its sale of B stock and the $8 recomputed gain. Under paragraph (j)(4) of this section, the attributes of this

gain are determined by treating S, M, and B as divisions of a single corporation. Under paragraph (c)(1) of this section, S's $6 gain and M's $2 gain are treated as long-term capital gain. The gain would be capital on a separate entity basis (assuming that section 341 does not apply), and this treatment is not inconsistent with treating S, M, and B as divisions of a single corporation because the stock sale and subsequent land sale are unrelated transactions and B remains a member following the sale.

(d) *Timing and attributes resulting from the land sale.* Under paragraph (j)(3) of this section, S takes $6 of its gain into account in Year 8 under the matching rule to reflect the $6 difference between B's $2 gain taken into account from its sale of an interest in the land and the $8 recomputed gain. Under paragraph (j)(4) of this section, the attributes of this gain are determined by treating S, M, and B as divisions of a single corporation and taking into account the activities of S, M, and B with respect to the land. Thus, both S's gain and B's gain might be ordinary income as a result of B's activities. (If B subsequently sells the balance of the land, S's gain taken into account is limited to its remaining $18 of intercompany gain.)

(e) *Sale of successor stock resulting in deconsolidation.* The facts are the same as in paragraph (a) of this *Example 1,* except that M sells 60% of the B stock to X for $66 on December 1 of Year 5 and B becomes a nonmember. Under the matching rule, M's sale of B stock results in $18 of S's gain being taken into account (to reflect the difference between M's $6 gain taken into account and the $24 recomputed gain). Under the acceleration rule, however, the entire $30 gain is taken into account (to reflect B becoming a nonmember, because its basis in the land reflects M's $100 cost basis from the prior intercompany transaction). Under paragraph (j)(4) of this section, the attributes of S's gain are determined by treating S, M, and B as divisions of a single corporation. Because M's cost basis in the land will be reflected by B as a nonmember, all of S's gain is treated as from the land (rather than a portion being from B's stock), and B's activities with respect to the land might therefore result in S's gain being ordinary income.

Example 2. Intercompany sale of member stock followed by recapitalization. (a) *Facts.* Before becoming a member of the P group, S owns P stock with a basis of $70. On January 1 of Year 1, P buys all of S's stock. On July 1 of Year 3, S sells the P stock to M for $100. On December 1 of Year 5, P acquires M's original P stock in exchange for new P stock in a recapitalization described in section 368(a)(1)(E).

(b) *Timing and attributes.* Although P's basis in the stock acquired from M is eliminated under paragraph (f)(4) of this section, the new P stock received by M is exchanged basis property (within the meaning of section 7701(a)(44)) having a basis under section 358 equal to M's basis in the original P stock. Under the successor asset rule of paragraph (j)(1) of this section, references to M's original P stock include references to M's new P stock. Because it is still possible to take S's intercompany item into account under the matching rule with respect to the successor asset, S's gain is not taken into account under the acceleration rule as a result of the basis elimination under paragraph (f)(4) of this section. Instead, the gain is taken into account based on subsequent events with respect to M's new P stock (for example, a subsequent distribution or redemption of the new stock).

Example 3. Back-to-back intercompany transactions—matching. (a) *Facts.* S holds land for investment with a basis of $70. On January 1 of Year 1, S sells the land to M for $90. M also holds the land for investment. On July 1 of Year 3, M sells the land for $100 to B, and B holds the land for sale to customers in the ordinary course of business. During Year 5, B sells all of the land to customers for $105.

(b) *Timing.* Under paragraph (b)(1) of this section, S's sale of the land to M and M's sale of the land to B are both intercompany transactions. S is the selling member and M is the buying member in the first intercompany transaction, and M is the selling member and B is the buying member in the second intercompany transaction. Under paragraph (j)(4) of this section, S, M and B are treated as divisions of a single corporation for purposes of determining the timing of their items from the intercompany transactions. See also paragraph (j)(2) of this section (B is treated as a successor to M for purposes of taking S's intercompany gain into account). Thus, S's $20 gain and M's $10 gain are both taken into account in Year 5 to reflect the difference between B's $5 gain taken into account with respect to the land and the $35 recomputed gain (the gain that B would have taken into account if the intercompany sales had been transfers between divisions of a single corporation, and B succeeded to S's $70 basis).

(c) *Attributes.* Under paragraphs (j)(4) of this section, the attributes of the intercompany items and corresponding items of S, M, and B are also determined by treating S, M, and B as divisions of a single corporation. For example, the attributes of S's and M's intercompany items are determined by taking B's activities into account.

Example 4. Back-to-back intercompany transactions—acceleration. (a) *Facts.* During Year 1, S performs services for M in exchange for $10 from M. S incurs $8 of employee expenses. M capitalizes the $10 cost of S's services under section 263 as part of M's cost to acquire real property from X. Under its separate entity method of accounting, S would take its income and expenses into account in Year 1. M

holds the real property for investment and, on July 1 of Year 5, M sells it to B at a gain. B also holds the real property for investment. On December 1 of Year 8, while B still owns the real property, P sells all of M's stock to X and M becomes a nonmember.

(b) *M's items.* M takes its gain into account immediately before it becomes a nonmember. Because the real property stays in the group, the acceleration rule redetermines the attributes of M's gain under the principles of the matching rule as if B sold the real property to an affiliated corporation that is not a member of the group for a cash payment equal to B's adjusted basis in the real property, and S, M, and B were divisions of a single corporation. Thus, M's gain is capital gain.

(c) *S's items.* Under paragraph (b)(2)(ii) of this section, S includes the $8 of expenses in determining its $2 intercompany income. In Year 1, S takes into account $8 of income and $8 of expenses. Under paragraph (j)(4) of this section, appropriate adjustments must be made to treat both S's performance of services for M and M's sale to B as occurring between divisions of a single corporation. Thus, S's $2 of intercompany income is not taken into account as a result of M becoming a nonmember, but instead will be taken into account based on subsequent events (e.g., under the matching rule based on B's sale of the real property to a nonmember, or under the acceleration rule based on P's sale of the stock of S or B to a nonmember). See the successor person rules of paragraph (j)(2) of this section (B is treated as a successor to M for purposes of taking S's intercompany income into account).

(d) *Sale of S's stock.* The facts are the same as in paragraph (a) of this *Example 4*, except that P sells all of S's stock (rather than M's stock) and S becomes a nonmember on July 1 of Year 5. S's remaining $2 of intercompany income is taken into account immediately before S becomes a nonmember. Because S's intercompany income is not from an intercompany sale, exchange, or distribution of property, the attributes of the intercompany income are determined on a separate entity basis. Thus, S's $2 of intercompany income is ordinary income. M does not take any of its intercompany gain into account as a result of S becoming a nonmember.

(e) *Intercompany income followed by intercompany loss.* The facts are the same as in paragraph (a) of this *Example 4*, except that M sells the real property to B at a $1 loss (rather than a gain). M takes its $1 loss into account under the acceleration rule immediately before M becomes a nonmember. But see §1.267(f)–1 (which might further defer M's loss if M and B remain in a controlled group relationship after M becomes a nonmember). Under paragraph (j)(4) of this section appropriate adjustments must be made to treat the group as if both intercompany transactions occurred between divisions of a single corporation. Accordingly, P's sale of M stock also results in S taking into account $1 of intercompany income as capital gain to offset M's $1 of corresponding capital loss. The remaining $1 of S's intercompany income is taken into account based on subsequent events.

Example 5. Successor group. (a) *Facts.* On January 1 of Year 1, B borrows $100 from S in return for B's note providing for $10 of interest annually at the end of each year, and repayment of $100 at the end of Year 20. As of January 1 of Year 3, B has paid the interest accruing under the note. On that date, X acquires all of P's stock and the former P group members become members of the X consolidated group.

(b) *Successor.* Under paragraph (j)(5) of this section, although B's note ceases to be an intercompany obligation of the P group, the note is not treated as satisfied and reissued under paragraph (g) of this section as a result of X's acquisition of P stock. Instead, the X consolidated group succeeds to the treatment of the P group for purposes of paragraph (g) of this section, and B's note is treated as an intercompany obligation of the X consolidated group.

Example 6. Liquidation—80% distributee. (a) *Facts.* X has had preferred stock described in section 1504(a)(4) outstanding for several years. On January 1 of Year 1, S buys all of X's common stock for $60, and B buys all of X's preferred stock for $40. X's assets have a $0 basis and $100 value. On July 1 of Year 3, X distributes all of its assets to S and B in a complete liquidation. Under §1.1502–34, section 332 applies to both S and B. Under section 337, X has no gain or loss from its liquidating distribution to S. Under sections 336 and 337(c), X has a $40 gain from its liquidating distribution to B. B has a $40 basis under section 334(a) in the assets received from X, and S has a $0 basis under section 334(b) in the assets received from X.

(b) *Intercompany items from the liquidation.* Under the matching rule, X's $40 gain from its liquidating distribution to B is not taken into account under this section as a result of the liquidation (and therefore is not yet reflected under §§1.1502–32 and 1.1502–33). Under the successor person rule of paragraph (j)(2)(i) of this section, S and B are both successors to X. Under section 337(c), X recognizes gain or loss only with respect to the assets distributed to B. Under paragraph (j)(2)(ii) of this section, to be consistent with the purposes of this section, S succeeds to X's $40 intercompany gain. The gain will be taken into account by S under the matching and acceleration rules of this section based on subsequent events. (The allocation of the intercompany gain to S does not govern the allocation of any other attributes.)

Example 7. Liquidation—no 80% distributee. (a) *Facts.* X has only common stock outstanding. On January 1 of Year 1, S buys 60% of X's stock for $60, and B buys 40% of X's stock for $40. X's assets have a $0 basis and $100 value. On July 1 of Year 3, X distributes all of its assets to S and B in a complete liquidation. Under §1.1502–34, section 332 applies to both S and B. Under sections 336 and 337(c), X has a $100 gain from its liquidating distributions to S and B. Under section 334(b), S has a $60 basis in the assets received from X and B has a $40 basis in the assets received from X.

(b) *Intercompany items from the liquidation.* Under the matching rule, X's $100 intercompany gain from its liquidating distributions to S and B is not taken into account under this section as a result of the liquidation (and therefore is not yet reflected under §§1.1502–32 and 1.1502–33). Under the successor person rule of paragraph (j)(2)(i) of this section, S and B are both successors to X. Under paragraph (j)(2)(ii) of this section, to be consistent with the purposes of this section, S succeeds to X's $40 intercompany gain with respect to the assets distributed to B, and B succeeds to X's $60 intercompany gain with respect to the assets distributed to S. The gain will be taken into account by S and B under the matching and acceleration rules of this section based on subsequent events. (The allocation of the intercompany gain does not govern the allocation of any other attributes.)

(k) *Cross references*—(1) *Section 108.* See §1.108–3 for the treatment of intercompany deductions and losses as subject to attribute reduction under section 108(b).

(2) *Section 263A(f).* See section 263A(f) and §1.263A–9(g)(5) for special rules regarding interest from intercompany transactions.

(3) *Section 267(f).* See section 267(f) and §1.267(f)–1 for special rules applicable to certain losses and deductions from transactions between members of a controlled group.

(4) *Section 460.* See §1.460–4(j) for special rules regarding the application of section 460 to intercompany transactions.

(5) *Section 469.* See §1.469–1(h) for special rules regarding the application of section 469 to intercompany transactions.

(6) *§1.1502–80.* See §1.1502–80 for the non-application of certain Internal Revenue Code rules.

(l) *Effective/applicability dates*—(1) *In general.* This section applies with respect to transactions occurring in years beginning on or after July 12, 1995. If both this section and prior law apply to a transaction, or neither applies, with the result that items may be duplicated, omitted, or eliminated in determining taxable income (or tax liability), or items may be treated inconsistently, prior law (and not this section) applies to the transaction. For example, S's and B's items from S's sale of property to B which occurs in a consolidated return year beginning before July 12, 1995, are taken into account under prior law, even though B may dispose of the property in a consolidated return year beginning on or after July 12, 1995. Similarly, an intercompany distribution to which a shareholder becomes entitled in a consolidated return year beginning before July 12, 1995, but which is distributed in a consolidated return year beginning on or after that date is taken into account under prior law (generally when distributed), because this section generally takes dividends into account when the shareholder becomes entitled to them but this section does not apply at that time. If application of prior law to S's deferred gain or loss from a deferred intercompany transaction (as defined under prior law) occurring in a consolidated return year beginning prior to July 12, 1995, would be affected by an intercompany transaction (as defined under this section) occurring in a consolidated return year beginning on or after July 12, 1995, S's deferred gain or loss continues to be taken into account as provided under prior law, and the items from the subsequent intercompany transaction are taken into account under this section. Appropriate adjustments must be made to prevent items from being duplicated,omitted, or eliminated in determining taxable income as a result of the application of both this section and prior law to the successive transactions, and to ensure the proper application of prior law. Paragraphs (a)(4), (f)(6)(ii), (f)(6)(iv)(A), (g)(3)(ii)(B)(*2*), and (j)(5)(i)(A) of this section apply with respect to transactions occurring on or after September 17, 2008. However, taxpayers may apply paragraph (j)(5)(i)(A) of this section to transactions that occurred prior to September 17, 2008.

(2) *Avoidance transactions*. This paragraph (l)(2) applies if a transaction is engaged in or structured on or after April 8, 1994, with a principal purpose to avoid the rules of this section (and instead to apply prior law). If this paragraph (l)(2) applies, appropriate adjustments must be made in years beginning on or after July 12, 1995, to prevent the avoidance, duplication, omission, or elimination of any item (or tax liability), or any other inconsistency with the rules of this section. For example, if S is a dealer in real property and sells land to B on March 16, 1995 with a principal purpose of converting any future appreciation in the land to capital gain, B's gain from the sale of the land on May 11, 1997 might be characterized as ordinary income under this paragraph (l)(2).

(3) *Election for certain stock elimination transactions*—(i) *In general*. A group may elect pursuant to this paragraph (l)(3) to apply this section (including the elections available under paragraph (f)(5)(ii) of this section) to stock elimination transactions to which prior law would otherwise apply. If an election is made, this section, and not prior law, applies to determine the timing and attributes of S's and B's gain or loss from stock with respect to all stock elimination transactions.

(ii) *Stock elimination transactions*. For purposes of this paragraph (l)(3), a stock elimination transaction is a transaction in which stock transferred from S to B—

(A) Is cancelled or redeemed on or after July 12, 1995;

(B) Is treated as cancelled in a liquidation pursuant to an election under section 338(h)(10) with respect to a qualified stock purchase with an acquisition date on or after July 12, 1995;

(C) Is distributed on or after July 12, 1995; or

(D) Is exchanged on or after July 12, 1995 for stock of a member (determined immediately after the exchange) in a transaction that would cause S's gain or loss from the transfer to be taken into account under prior law.

(iii) *Time and manner of making election*. An election under this paragraph (l)(3) is made by attaching to a timely filed original return (including extensions) for the consolidated return year including July 12, 1995 a statement entitled ''[Insert Name and Employer Identification Number of Common Parent] HEREBY ELECTS THE APPLICATION OF §1.1502–13(l)(3).'' See paragraph (f)(5)(ii)(E) of this section for the manner of electing the relief provisions of paragraph (f)(5)(ii) of this section.

(4) *Prior law*. For transactions occurring in S's years beginning before July 12, 1995, see the applicable regulations issued under section 1502. See §§1.1502–13, 1.1502–13T, 1.1502–14, 1.1502–14T, 1.1502–31, and 1.1502–32 (as contained in the 26 CFR part 1 edition revised as of April 1, 1995).

(5) *Consent to adopt method of accounting*. For intercompany transactions occurring in a consolidated group's first taxable year beginning on or after July 12, 1995, the Commissioner's consent under section 446(e) is hereby granted for any changes in methods of accounting that are necessary solely by reason of the timing rules of this section. Changes in method of accounting for these transactions are to be effected on a cut-off basis.

(6) *Effective/applicability date*. (i) *In general*. Paragraph (f)(7)(i) *Example 4*. applies to transactions occurring on or after December 18, 2009.

(ii) [Reserved]

(m) *Effective/applicability date*. Paragraphs (f)(5)(ii)(E) and (f)(6)(i)(C)(*2*) of this section apply to any original consolidated Federal income tax return due (without extensions) after June 14, 2007. For original consolidated Federal income tax returns due (without extensions) after May 30, 2006, and on or before June 14, 2007, see §1.1502–13T as contained in 26 CFR part 1 in effect on April 1, 2007. For original consolidated Federal income tax returns due (without extensions) on or before May 30, 2006, see §1.1502–13 as contained in 26 CFR part 1 in effect on April 1, 2006. Paragraph (f)(5)(ii)(C) of this section is applicable to any qualified stock disposition (as defined in §1.336–1(b)(6)) for which the disposition date (as defined in §1.336–1(b)(8)) is on or after May 15, 2013.

[T.D. 8597, 60 FR 36685, July 18, 1995]

EDITORIAL NOTE: For FEDERAL REGISTER citations affecting §1.1502–13, see the List of CFR Sections Affected, which appears in the

Finding Aids section of the printed volume and at *www.fdsys.gov*.

§ 1.1502–15 SRLY limitation on built-in losses.

(a) *SRLY limitation*. Except as provided in paragraph (f) of this section (relating to built-in losses of the common parent) and paragraph (g) of this section (relating to an overlap with section 382), built-in losses are subject to the SRLY limitation under §§ 1.1502–21(c) and 1.1502–22(c) (including applicable subgroup principles). Built-in losses are treated as deductions or losses in the year recognized, except for the purpose of determining the amount of, and the extent to which the built-in loss is limited by, the SRLY limitation for the year in which it is recognized. Solely for such purpose, a built-in loss is treated as a hypothetical net operating loss carryover or net capital loss carryover arising in a SRLY, instead of as a deduction or loss in the year recognized. To the extent that a built-in loss is allowed as a deduction under this section in the year it is recognized, it offsets any consolidated taxable income for the year before any loss carryovers or carrybacks are allowed as a deduction. To the extent not so allowed, it is treated as a separate net operating loss or net capital loss carryover or carryback arising in the year of recognition and, under § 1.1502–21(c) or 1.1502–22(c), the year of recognition is treated as a SRLY.

(b) *Built-in losses*—(1) *Defined*. If a corporation has a net unrealized built-in loss under section 382(h)(3) (as modified by this section) on the day it becomes a member of the group (whether or not the group is a consolidated group), its deductions and losses are built-in losses under this section to the extent they are treated as recognized built-in losses under section 382(h)(2)(B) (as modified by this section). This paragraph (b) generally applies separately with respect to each member, but see paragraph (c) of this section for circumstances in which it is applied on a subgroup basis.

(2) *Operating rules*. Solely for purposes of applying paragraph (b)(1) of this section, the principles of § 1.1502–94(c) apply with appropriate adjustments, including the following:

(i) *Stock acquisition*. A corporation is treated as having an ownership change under section 382(g) on the day the corporation becomes a member of a group, and no other events (e.g., a subsequent ownership change under section 382(g) while it is a member) are treated as causing an ownership change.

(ii) *Asset acquisition*. In the case of an asset acquisition by a group, the assets and liabilities acquired directly from the same transferor (whether corporate or non-corporate, foreign or domestic) pursuant to the same plan are treated as the assets and liabilities of a corporation that becomes a member of the group (and has an ownership change) on the date of the acquisition.

(iii) *Recognized built-in gain or loss*. A loss that is included in the determination of net unrealized built-in gain or loss and that is recognized but disallowed or deferred (e.g., under § 1.337(d)–2, § 1.1502–35, § 1.1502–36, or section 267) is not treated as a built-in loss unless and until the loss would be allowed during the recognition period without regard to the application of this section. Section 382(h)(1)(B)(ii) does not apply to the extent it limits the amount of recognized built-in loss that may be treated as a pre-change loss to the amount of the net unrealized built-in loss.

(c) *Built-in losses of subgroups*—(1) *In general*. In the case of a subgroup, the principles of paragraph (b) of this section apply to the subgroup, and not separately to its members. Thus, the net unrealized built-in loss and recognized built-in loss for purposes of paragraph (b) of this section are based on the aggregate amounts for each member of the subgroup.

(2) *Members of subgroups*. A subgroup is composed of those members that have been continuously affiliated with each other for the 60 consecutive month period ending immediately before they become members of the group in which the loss is recognized. A member remains a member of the subgroup until it ceases to be affiliated with the loss member. For this purpose, the principles of § 1.1502–21(c)(2)(iv) through (vi) apply with appropriate adjustments.

(3) *Coordination of 60 month affiliation requirement with the overlap rule*. If one

or more corporations become members of a group and are included in the determination of a net unrealized built-in loss that is subject to the overlap rule described in paragraph (g)(1) of this section, then for purposes of paragraph (c)(2) of this section, such corporations that become members of the group are treated as having been affiliated for 60 consecutive months with the common parent of the group and are also treated as having been affiliated with any other members who have been affiliated or are treated as having been affiliated with the common parent at such time. The corporations are treated as having been affiliated with such other members for the same period of time that those members have been affiliated or are treated as having been affiliated with the common parent. If two or more corporations become members of the group at the same time, but this paragraph (c)(3) does not apply to every such corporation, then immediately after the corporations become members of the group, and solely for purposes of paragraph (c)(2) of this section, the corporations to which this paragraph (c)(3) applies are treated as having not been previously affiliated with the corporations to which this paragraph (c)(3) does not apply. If the common parent has become the common parent of an existing group within the previous five year period in a transaction described in §1.1502–75(d)(2)(ii) or (3), the principles of §§1.1502–91(g)(6) and 1.1502–96(a)(2)(iii) shall apply.

(4) *Built-in amounts*. Solely for purposes of determining whether the subgroup has a net unrealized built-in loss or whether it has a recognized built-in loss, the principles of §1.1502–91(g) and (h) apply with appropriate adjustments.

(d) *Examples*. For purposes of the examples in this section, unless otherwise stated, all groups file consolidated returns, all corporations have calendar taxable years, the facts set forth the only corporate activity, value means fair market value and the adjusted basis of each asset equals its value, all transactions are with unrelated persons, and the application of any limitation or threshold under section 382 is disregarded. The principles of this section are illustrated by the following examples:

Example 1. Determination of recognized built-in loss. (i) Individual A owns all of the stock of P and T. T has two depreciable assets. Asset 1 has an unrealized loss of $55 (basis $75, value $20), and asset 2 has an unrealized gain of $20 (basis $30, value $50). P acquires all the stock of T from Individual A during Year 1, and T becomes a member of the P group. P's acquisition of T is not an ownership change as defined by section 382(g). Paragraph (g) of this section does not apply because there is not an overlap of the application of the rules contained in paragraph (a) of this section and section 382.

(ii) Under paragraph (b)(2)(i) of this section, and solely for purposes of applying paragraph (b)(1) of this section, T is treated as having an ownership change under section 382(g) on becoming a member of the P group. Under paragraph (b)(1) of this section, none of T's $55 of unrealized loss is treated as a built-in loss unless T has a net unrealized built-in loss under section 382(h)(3) on becoming a member of the P group.

(iii) Under section 382(h)(3)(A), T has a $35 net unrealized built-in loss on becoming a member of the P group (($55)+$20=($35)). Assume that this amount exceeds the threshold requirement in section 382(h)(3)(B). Under section 382(h)(2)(B), the entire amount of T's $55 unrealized loss is treated as a built-in loss to the extent it is recognized during the 5-year recognition period described in section 382(h)(7). Under paragraph (b)(2)(iii) of this section, the restriction under section 382(h)(1)(B)(ii), which limits the amount of recognized built-in loss that is treated as pre-change loss to the amount of the net unrealized built-in loss, is inapplicable for this purpose. Consequently, the entire $55 of unrealized loss (not just the $35 net unrealized loss) is treated under paragraph (b)(1) of this section as a built-in loss to the extent it is recognized within 5 years of T's becoming a member of the P group. Under paragraph (a) of this section, a built-in loss is subject to the SRLY limitation under §1.1502–21(c)(1).

(iv) Under paragraph (b)(2)(ii) of this section, the built-in loss would similarly be subject to a SRLY limitation under §1.1502–21(c)(1) if T transferred all of its assets and liabilities to a subsidiary of the P group in a single transaction described in section 351. To the extent the built-in loss is recognized within 5 years of T's transfer, all of the items contributed by the acquiring subsidiary to consolidated taxable income (and not just the items attributable to the assets and liabilities transferred by T) are included for purposes of determining the SRLY limitation under §1.1502–21(c)(1).

Example 2. Actual application of section 382 not relevant. (i) Individual A owns all of the stock of P, and Individual B owns all of the

stock of T. T has two depreciable assets. Asset 1 has an unrealized loss of $25 (basis $75, value $50), and asset 2 has an unrealized gain of $20 (basis $30, value $50). P buys 55 percent of the stock of T in January of Year 1, resulting in an ownership change of T under section 382(g). During March of Year 2, P buys the 45 percent balance of the T stock, and T becomes a member of the P group.

(ii) Although T has an ownership change for purposes of section 382 in Year 1 and not Year 2, T's joining the P group in Year 2 is treated as an ownership change under section 382(g) solely for purposes of this section. Consequently, for purposes of this section, whether T has a net unrealized built-in loss under section 382(h)(3) is determined as if the day T joined the P group were a change date.

Example 3. Determination of a recognized built-in loss of a subgroup. (i) Individual A owns all of the stock of P, S, and M. P and M are each the common parent of a consolidated group. During Year 1, P acquires all of the stock of S from Individual A, and S becomes a member of the P group. P's acquisition of S is not an ownership change as defined by section 382(g). At the beginning of Year 7, M acquires all of the stock of P from Individual A, and P and S become members of the M group. M's acquisitions of P and S are also not ownership changes as defined by section 382(g). At the time of M's acquisition of the P stock, P has (disregarding the stock of S) a $10 net unrealized built-in gain (two depreciable assets, asset 1 with a basis of $35 and a value of $55, and asset 2 with a basis of $55 and a value of $45), and S has a $75 net unrealized built-in loss (two depreciable assets, asset 3 with a basis of $95 and a value of $10, and asset 4 with a basis of $10 and a value of $20).

(ii) Under paragraph (c) of this section, P and S compose a subgroup on becoming members of the M group because P and S were continuously affiliated for the 60 month period ending immediately before they became members of the M group. Consequently, paragraph (b) of this section does not apply to P and S separately. Instead, their separately computed unrealized gains and losses are aggregated for purposes of determining whether, and the extent to which, any unrealized loss is treated as built-in loss under this section and is subject to the SRLY limitation under § 1.1502–21(c).

(iii) Under paragraph (c) of this section, the P subgroup has a net unrealized built-in loss on the day P and S become members of the M group, determined by treating the day they become members as a change date. The net unrealized built-in loss is the aggregate of P's net unrealized built-in gain of $10 and S's net unrealized built-in loss of $75, or an aggregate net unrealized built-in loss of $65. (The stock of S owned by P is disregarded for purposes of determining the net unrealized built-in loss. However, any loss allowed on the sale of the stock within the recognition period is taken into account in determining recognized loss.) Assume that the $65 net unrealized built-in loss exceeds the threshold requirement under section 382(h)(3)(B).

(iv) Under paragraphs (b)(1), (b)(2)(iii), and (c) of this section, a loss recognized during the 5-year recognition period on an asset of P or S held on the day that P and S became members of the M group is a built-in loss except to the extent the group establishes that such loss exceeds the amount by which the adjusted basis of such asset on the day the member became a member exceeded the fair market value of such asset on that same day. If P sells asset 2 for $45 in Year 7 and recognizes a $10 loss, the entire $10 loss is treated as a built-in loss under paragraphs (b)(2)(iii) and (c) of this section. If S sells asset 3 for $10 in Year 7 and recognizes an $85 loss, the entire $85 loss is treated as a built-in loss under paragraphs (b)(2)(iii) and (c) of this section (not just the $55 balance of the P subgroup's $65 net unrealized built-in loss).

(v) The determination of whether P and S constitute a SRLY subgroup for purposes of loss carryovers and carrybacks, and the extent to which built-in losses are not allowed under the SRLY limitation, is made under § 1.1502–21(c).

Example 4. Computation of SRLY limitation. (i) Individual A owns all of the stock of P, the common parent of a consolidated group. During Year 1, Individual A forms T by contributing $300, and T sustains a $100 net operating loss. During Year 2, T's assets decline in value to $100. At the beginning of Year 3, P acquires all the stock of T from Individual A, and T becomes a member of the P group with a net unrealized built-in loss of $100. P's acquisition of T is not an ownership change as defined by section 382(g). Assume that $100 exceeds the threshold requirements of section 382(h)(3)(B). During Year 3, T recognizes its unrealized built-in loss as a $100 ordinary loss. The members of the P group contribute the following net income to the consolidated taxable income of the P group (disregarding T's recognized built-in loss and any consolidated net operating loss deduction under § 1.1502–21) for Years 3 and 4:

	Year 3	Year 4	Total
P group (without T)	$100	$100	$200
T	60	40	100
CTI	160	140	300

(ii) Under paragraph (b) of this section, T's $100 ordinary loss in Year 3 (not taken into account in the consolidated taxable income computations above) is a built-in loss. Under paragraph (a) of this section, the built-in loss is treated as a net operating loss carryover for purposes of determining the SRLY limitation under § 1.1502–21(c).

(iii) For Year 3, § 1.1502–21(c) limits T's $100 built-in loss and $100 net operating loss carryover from Year 1 to the aggregate of the P group's consolidated taxable income through Year 3, determined by reference to only T's items. For this purpose, consolidated taxable income is determined without regard to any consolidated net operating loss deductions under § 1.1502–21(a).

(iv) The P group's consolidated taxable income through Year 3 is $60 when determined by reference to only T's items. Under § 1.1502–21(c), the SRLY limitation for Year 3 is therefore $60.

(v) Under paragraph (a) of this section, the $100 built-in loss is treated as a current deduction for all purposes other than determination of the SRLY limitation under § 1.1502–21(c). Consequently, a deduction for the built-in loss is allowed in Year 3 before T's loss carryover from Year 1 is allowed, but only to the extent of the $60 SRLY limitation. None of T's Year 1 loss carryover is allowed because the built-in loss ($100) exceeds the SRLY limitation for Year 3.

(vi) The $40 balance of the built-in loss that is not allowed in Year 3 because of the SRLY limitation is treated as a $40 net operating loss arising in Year 3 that is carried to other years in accordance with the rules of § 1.1502–21(b). The $40 net operating loss is treated under paragraph (a) of this section and § 1.1502–21(c)(1)(ii) as a loss carryover or carryback from Year 3 that arises in a SRLY, and is subject to the rules of § 1.1502–21 (including § 1.1502–21(c)) rather than this section. See also § 1.1502–21(c)(1)(iii) *Example 4*.

(vii) The facts are the same as in paragraphs (i) through (vi) of this *Example 4*, except that T has an additional built-in loss when it joins the P group which is recognized in Year 4. For purposes of determining the SRLY limitation for this additional loss in Year 4 (or any subsequent year), the $60 of built-in loss allowed as a deduction in Year 3 is treated under paragraph (a) of this section as a deduction in Year 3 that reduces the P group's consolidated taxable income when determined by reference to only T's items.

Example 5. Built-in loss exceeding consolidated taxable income in the year recognized. (i) Individual A owns all of the stock of P and T. During Year 1, P acquires all the stock of T from Individual A, and T becomes a member of the P group. P's acquisition of T was not an ownership change as defined by section 382(g). At the time of acquisition, T has a noncapital asset with an unrealized loss of $45 (basis $100, value $55), which exceeds the threshold requirements of section 382(h)(3)(B). During Year 2, T sells its asset for $55 and recognizes the unrealized built-in loss. The P group has $10 of consolidated taxable income in Year 2, computed by disregarding T's recognition of the $45 built-in loss and the consolidated net operating loss deduction, while the consolidated taxable income would be $25 if determined by reference to only T's items (other than the $45 loss).

(ii) T's $45 loss is recognized in Year 2 and, under paragraph (b) of this section, constitutes a built-in loss. Under paragraph (a) of this section and § 1.1502–21(c)(1)(ii), the loss is treated as a net operating loss carryover to Year 2 for purposes of applying the SRLY limitation under § 1.1502–21(c).

(iii) For Year 2, T's SRLY limitation is the aggregate of the P group's consolidated taxable income through Year 2 determined by reference to only T's items. For this purpose, consolidated taxable income is determined by disregarding any built-in loss that is treated as a net operating loss carryover, and any consolidated net operating loss deductions under § 1.1502–21(a). Consolidated taxable income so determined is $25.

(iv) Under § 1.1502–21(c), $25 of the $45 built-in loss could be deducted in Year 2. Because the P group has only $10 of consolidated taxable income (determined without regard to the $45), the $25 loss creates a consolidated net operating loss of $15. This loss is carried back or forward under the rules of § 1.1502–21(b) and absorbed under the rules of § 1.1502–21(a). This loss is not treated as arising in a SRLY (see § 1.1502–21(c)(1)(ii)) and therefore is not subject to the SRLY limitation under § 1.1502–21(c) in any consolidated return year of the group to which it is carried. The remaining $20 is treated as a loss carryover arising in a SRLY and is subject to the limitation of § 1.1502–21(c) in the year to which it is carried.

(e) *Predecessors and successors.* For purposes of this section, any reference to a corporation or member includes, as the context may require, a reference to a successor or predecessor, as defined in § 1.1502–1(f)(4).

(f) *Built-in losses recognized by common parent of group*—(1) *General rule.* Paragraph (a) of this section does not apply to any loss recognized by the group on an asset held by the common parent on the date the group is formed. Following an acquisition described in § 1.1502–75(d)(2) or (3), references to the common parent are to the corporation that was the common parent immediately before the acquisition.

(2) *Anti-avoidance rule.* If a corporation that becomes a common parent of a group acquires assets with a net unrealized built-in loss in excess of the threshold requirement of section 382(h)(3)(B) (and thereby increases its net unrealized built-in loss or decreases its net unrealized built-in gain) prior

to, and in anticipation of, the formation of the group, paragraph (f)(1) of this section does not apply.

(g) *Overlap with section 382*—(1) *General rule*. The limitations provided in §§1.1502–21(c) and 1.1502–22(c) do not apply to recognized built-in losses or to loss carryovers or carrybacks attributable to recognized built-in losses when the application of paragraph (a) of this section results in an overlap with the application of section 382.

(2) *Definitions*—(i) *Generally*. For purposes of this paragraph (g), the definitions and nomenclature contained in section 382, the regulations thereunder, and §§1.1502–90 through 1.1502–99 apply.

(ii) *Overlap*—(A) An overlap of the application of paragraph (a) of this section and the application of section 382 with respect to built-in losses occurs if a corporation becomes a member of a consolidated group (the SRLY event) within six months of the change date of an ownership change giving rise to a section 382(a) limitation that would apply with respect to the corporation's recognized built-in losses (the section 382 event). Except as provided in paragraph (g)(3) of this section, application of the overlap rule does not require that the size and composition of the corporation's net unrealized built-in loss is the same on the date of the section 382 event and the SRLY event.

(B) For special rules in the event that there is a SRLY subgroup and/or a loss subgroup as defined in §1.1502–91(d)(2) with respect to built-in losses, see paragraph (g)(4) of this section.

(3) *Operating rules*—(i) *Section 382 event before SRLY event*. If a SRLY event occurs on the same date as a section 382 event or within the six month period beginning on the date of the section 382 event, paragraph (g)(1) of this section applies beginning with the tax year that includes the SRLY event. Paragraph (g)(1) of this section does not apply, however, if a corporation that would otherwise be subject to the overlap rule acquires assets from a person other than a member of the group with a net unrealized built-in loss in excess of the threshold requirement of section 382(h)(3)(B) (and thereby increases its net unrealized built-in loss) after the section 382 event, and before the SRLY event.

(ii) *SRLY event before section 382 event*. If a section 382 event occurs within the period beginning the day after the SRLY event and ending six months after the SRLY event, paragraph (g)(1) of this section applies starting with the first tax year that begins after the section 382 event. However, paragraph (g)(1) of this section does not apply at any time if a corporation that otherwise would be subject to paragraph (g)(1) of this section transfers assets with an unrealized built-in loss to another member of the group after the SRLY event, but before the section 382 event, unless the corporation recognizes the built-in loss upon the transfer.

(4) *Subgroup rules*. In general, in the case of built-in losses for which there is a SRLY subgroup and the corporations joining the group at the time of the SRLY event also constitute a loss subgroup (as defined in §1.1502–91(d)(2)), the principles of this paragraph (g) apply to the SRLY subgroup, and not separately to its members. However, paragraph (g)(1) of this section applies with respect to built-in losses only if—

(i) All members of the SRLY subgroup with respect to those built-in losses are also included in a loss subgroup (as defined in §1.1502–91(d)(2)); and

(ii) All members of a loss subgroup (as defined in §1.1502–91(d)(2)) are also members of a SRLY subgroup with respect to those built-in losses.

(5) *Asset acquisitions*. Notwithstanding the application of this paragraph (g), paragraph (a) of this section applies to asset acquisitions by the corporation that occurs after the latter of the SRLY event and the section 382 event. See, paragraph (b)(2)(ii) of this section.

(6) *Examples*. The principles of this paragraph (g) are illustrated by the following examples:

Example 1. Determination of subgroup. (i) Individual A owns all of the stock of P, P1, and S. In Year 1, P acquires all of the stock of P1, and they file a consolidated return. In Year 3, P acquires all of the stock of S, and S joins the P group. Individual B, unrelated to Individual A, owns all of the stock of M and K, each the common parent of a consolidated group. Individual C, unrelated to either Individual A or Individual B, owns all of the stock of T.

(ii) At the beginning of Year 7, M acquires all of the stock of P from Individual A, and, as a result, P, P1, and S become members of the M group. At the time of M's acquisition of the P stock, P has a $15 net unrealized built-in loss (disregarding the stock of P1), P1 has a net unrealized built-in gain of $10, and S has a net unrealized built-in gain of $5.

(iii) During Year 8, M acquires all of the stock of T, and T joins the M group. At the time of M's acquisition of the T stock, T had an unrealized built-in loss of $15. At the beginning of Year 9, K acquires all of the stock of M from Individual B, and the members of the M consolidated group including P, P1, S, and T become members of the K group. At the time of K's acquisition of the M stock, M has (disregarding the stock of P and T) a $15 net unrealized built-in loss, P has a $20 net unrealized built-in loss (disregarding the stock of P1), P1 has a net unrealized built-in gain of $5, S has a net unrealized built-in loss of $35, and T has a $15 net unrealized built-in loss.

(iv) M's acquisition of P in Year 7 results in P, P1, and S becoming members of the M group (the SRLY event). Under paragraph (c) of this section, P and P1 compose a SRLY built-in loss subgroup because they have been affiliated for the 60 consecutive month period immediately preceding joining the M group. S is not a member of the subgroup because on becoming a member of the M group it had not been continuously affiliated with P and P1 for the 60 month period ending immediately before it became a member of the M group. Consequently, §1.1502–15 applies to S separately from the P and P1 subgroup.

(v) Assuming that the $5 net unrealized built-in loss of the P/P1 subgroup exceeds the threshold requirement under section 382(h)(3)(B), M's acquisition of P resulted in an ownership change of P and P1 within the meaning of section 382(g) that subjects P and P1 to a limitation under section 382(a) (the section 382 event). Because, with respect to P and P1, the SRLY event and the change date of the section 382 event occur on the same date and because the loss subgroup and SRLY subgroup are coextensive, there is an overlap of the application of the SRLY rules and the application of section 382.

(vi) S was not a loss corporation because it did not have a net operating loss carryover, or a net unrealized built-in loss, and therefore, M's acquisition of P did not result in an ownership change of S within the meaning of section 382(g). S, therefore is not subject to the overlap rule of paragraph (g) of this section.

(vii) M's acquisition of T resulted in T becoming a member of the M group (the SRLY event). Assuming that T's $15 net unrealized built-in loss exceeds the threshold requirement under section 382(h)(3)(B), M's acquisition of T also resulted in an ownership change of T within the meaning of section 382(g) that subjects T to a limitation under section 382(a) (the section 382 event). Because, with respect to T, the SRLY event and the change date of the section 382 event occur on the same date, there is an overlap of the application of the SRLY rules and the application of section 382 within the meaning of paragraph (g) of this section.

(viii) K's acquisition of M results in the members of the M consolidated group, including T, P, P1, and S, becoming members of the K group (the SRLY event). Because T, P, and P1 were each included in the determination of a net unrealized built-in loss that was subject to the overlap rule described in paragraph (g)(1) of this section when they each became members of the M group, they are deemed under paragraph (c)(3) of this section to have been continuously affiliated with M for the 60 month period ending immediately before becoming a member of the M group, notwithstanding their actual affiliation history. As a result, M, T, P, and P1 compose a SRLY built-in loss subgroup under paragraph (c)(2) of this section. K's acquisition of M is not subject to paragraph (g) of this section because it does not result in a section 382 event.

(ix) S, however, is not a member of the subgroup under paragraph (c)(2) of this section. Because S was not included in the determination of a net unrealized built-in loss that was subject to the overlap rule described in paragraph (g)(1) of this section when it joined the M group, S is treated as becoming an affiliate of M on the date it joined the M group. Furthermore, under paragraph (c)(3) of this section, S is deemed to have begun its affiliation with P and P1 on the date it joined the M group. Consequently, §1.1502–15 applies to S separately to the extent its built-in loss is recognized within the recognition period.

Example 2. Post-overlap acquisition of assets. (i) Individual A owns all of the stock of P, the common parent of a consolidated group. B, an individual unrelated to Individual A, owns all of the stock of T. T has two depreciable assets. Asset 1 has an unrealized built-in loss of $25 (basis $75, value $50), and asset 2 has an unrealized built-in gain of $20 (basis $30, value $50). During Year 3, P buys all of the stock of T from Individual B. On January 1, Year 4, P contributes $80 cash and Individual A contributes asset 3, a depreciable asset, with a net unrealized built-in loss of $45 (basis $65, value $20), in exchange for T stock in a transaction that is described in section 351.

(ii) P's acquisition of T results in T becoming a member of the P group (the SRLY event) and also results in an ownership change of T, within the meaning of section 382(g), that gives rise to a limitation under section 382(a) (the section 382 event).

(iii) Because the SRLY event and the change date of the section 382 event occur on

the same date, there is an overlap of the application of the SRLY rules and the application of section 382. Consequently, under paragraph (g) of this section, the limitation under paragraph (a) of this section does not apply to T's net unrealized built-in loss when it joined the P group.

(iv) Individual A's Year 4 contribution of a depreciable asset occurred after T was a member of the P group. Assuming that the amount of the net unrealized built-in loss exceeds the threshold requirement of section 382(h)(3)(B), the sale of asset 3 within the recognition period is subject to the SRLY limitation of paragraphs (a) and (b)(2)(ii) of this section.

Example 3. Overlap rule. (i) Individual A owns all of the stock of P, the common parent of a consolidated group. B, an individual unrelated to Individual A, owns all of the stock of T. T has two depreciable assets. Asset 1 has an unrealized loss of $55 (basis $75, value $20), and asset 2 has an unrealized gain of $30 (basis $30, value $60). On February 28 of Year 2, P purchases 55% of T from Individual B. On June 30, of Year 2, P purchases an additional 35% of T from Individual B.

(ii) The February 28 purchase of 55% of T is a section 382 event because it results in an ownership change of T that gives rise to a section 382(a) limitation. The June 30 purchase of 35% of T results in T becoming a member of the P group and is therefore a SRLY event.

(iii) Because the SRLY event occurred within six months of the change date of the section 382 event, there is an overlap of the application of the SRLY rules and the application of section 382, and paragraph (a) of this section does not apply. Therefore, the SRLY limitation does not apply to any of the $55 loss in asset 1 recognized by T after T joined the P group. See § 1.1502–94 for rules relating to the application of section 382 with respect to T's $25 unrealized built-in loss.

Example 4. Overlap rule-Fluctuation in value. (i) The facts are the same as in *Example 3,* except that by June 30, of Year 2, asset 1 had declined in value by a further $10. Thus asset 1 had an unrealized loss of $65 (basis $75, value $10), and asset 2 had an unrealized gain of $30 (basis $30, value $60).

(ii) Because paragraph (a) of this section does not apply, the further decrease in asset 1's value is disregarded. Consequently, the results are the same as in *Example 3.*

(h) *Effective date*—(1) *In general.* This section generally applies to built-in losses recognized in taxable years for which the due date (without extensions) of the consolidated return is after June 25, 1999. However—

(i) In the event that paragraphs (f)(1) and (g)(1) of this section do not apply to a particular built-in loss in the current group, then solely for purposes of applying paragraph (a) of this section to determine a limitation with respect to that built-in loss and with respect to which the SRLY register (consolidated taxable income determined by reference to only the member's (or subgroup's) items of income, gain, deduction, or loss) began in a taxable year for which the due date of the return was on or before June 25, 1999, paragraph (c)(3) of this section shall not apply; and

(ii) For purposes of paragraph (g) of this section, only an ownership change to which section 382(a) as amended by the Tax Reform Act of 1986 applies shall constitute a section 382 event.

(2) *Prior periods.* For certain taxable years ending on or before June 25, 1999, see § 1.1502–15T in effect prior to June 25, 1999, as contained in 26 CFR part 1 revised April 1, 1999, as applicable.

[T.D. 8823, 64 FR 36101, July 2, 1999; 64 FR 41784, Aug. 2, 1999, as amended by T.D. 9048, 68 FR 12290, Mar. 14, 2003; T.D. 9187, 70 FR 10326, Mar. 3, 2005; T.D. 9254, 71 FR 13018, Mar. 14, 2006; T.D. 9424, 73 FR 53986, Sept. 17, 2008]

§ 1.1502–16 Mine exploration expenditures.

(a) *Section 617*—(1) *In general.* If the aggregate amount of the expenditures to which section 617(a) applies, paid or incurred with respect to mines or deposits located outside the United States (as defined in section 638 and the regulations thereunder), does not exceed:

(i) $400,000 minus

(ii) All amounts deducted or deferred during the taxable year and all preceding taxable years under section 617 or section 615 of the Internal Revenue Code of 1954 and section 23(ff) of the Internal Revenue Code of 1939 by corporations which are members of the group during the taxable year (and individuals or corporations which have transferred any mineral property to any such member within the meaning of section 617(g)(2)(B)) for taxable years ending after December 31, 1950 and prior to the taxable year, then the deduction under section 617 with respect to such foreign expenditures and paragraph (c) of § 1.1502–12 for each member shall be no greater than an allocable

portion of such amount hereinafter referred to as the ''consolidated foreign exploration limitation.'' Such allocable portion shall be determined under subparagraph (2) of this paragraph. If the amount of such expenditures exceeds the consolidated foreign exploration limitation, no deduction shall be allowed with respect to such excess.

(2) *Allocable portion of limitation*. A member's allocable portion of the consolidated foreign exploration limitation for a consolidated return year shall be:

(i) The amount allocated by the common parent pursuant to an allocation plan adopted by the consolidated group, but in no event shall a member be allocated more than the amount it could have deducted had it filed a separate return. Such allocation plan must include a statement which also contains the total foreign exploration expenditures of each member which could have been deducted under section 617 if the member had filed a separate return. Such plan must be attached to a consolidated return filed on or before the due date of such return (including extensions of time), and may not be changed after such date, or

(ii) If no plan is filed in accordance with subdivision (i) of this subparagraph, then the portion of the consolidated foreign exploration limitation allocable to each member incurring such expenditures is an amount equal to such limitation multiplied by a fraction, the numerator of which is the amount of foreign exploration expenditures which could have been deducted under section 617 by such member had it filed a separate return and the denominator of which is the aggregate of such amounts for all members of the group.

(b) *Section 615*—(1) *In general*. If the aggregate amount of the expenditures, to which section 615(a) applies, which are paid or incurred by the members of the group during any consolidated return year exceeds the lesser of:

(i) $100,000, or

(ii) $400,000 minus all such expenditures deducted (or deferred) by corporations which are members of the group during the taxable year (and individuals or corporations which have transferred any mineral property to any such member within the meaning of section 615(c)(2)(B)) for taxable years ending after December 31, 1950, and prior to the taxable year, then the deduction (or amount deferrable) under section 615 and paragraph (c) of § 1.1502–12 for each member shall be no greater than an allocable portion of such lesser amount, hereinafter referred to as the ''consolidated exploration limitation''. Such allocable portion shall be determined under subparagraph (2) of this paragraph.

(2) *Allocable portion of limitation*. A member's allocable portion of the consolidated exploration limitation for a consolidated return year shall be:

(i) The amount allocated by the common parent pursuant to an allocation plan adopted by the consolidated group, but in no event shall a member be allocated more than the amount it could have deducted (or deferred) had it filed a separate return. Such allocation plan must include a statement which also contains the total exploration expenditures of each member for the taxable year, and the expenditures of each member which could have been deducted (or deferred) under section 615 if the member had filed a separate return. Such plan must be attached to a consolidated return filed on or before the due date of such return (including extensions of time), and may not be changed after such date, or

(ii) If no plan is filed in accordance with subdivision (i) of this subparagraph, then the portion of the consolidated exploration limitation allocable to each member incurring such expenditures is an amount equal to such limitation multiplied by a fraction, the numerator of which is the amount which could have been deducted (or deferred) under section 615 by such member had it filed a separate return and the denominator of which is the aggregate of such amounts for all members of the group.

(c) *Examples*. The provisions of this section may be illustrated by the following examples:

Example 1. Corporation X and its wholly owned subsidiaries, corporations Y and Z, file a consolidated return for the calendar year 1971. None of the corporations have incurred exploration expenditures described in section 617 in previous years. During 1971, X

incurred foreign exploration expenditures of $30,000, Y of $20,000, and Z of $40,000. The amount of foreign exploration expenditures deductible under section 617 for purposes of computing separate taxable income under § 1.1502–12 will be the amount actually expended by each corporation.

Example 2. Assume the same facts as in example (1) except that prior to 1971, X, Y, and Z had deducted (or deferred) under section 615 and 617 a total of $300,000 of exploration expenditures. During 1971, with respect to deposits located outside the United States X incurred exploration expenditures of $25,000, Y of $75,000, and Z of $125,000. The consolidated exploration limitation under paragraph (a) of this section with respect to the foreign deposits (there is no limitation with respect to the domestic expenditures) is $100,000. X may allocate the $100,000 in any manner among the three members, except that X may not be allocated more than $25,000 nor Y more than $75,000, the amount actually expended by X and Y and which they could have deducted had they each filed a separate return. If the allocation is not made in accordance with paragraph (a)(2)(i) of this section, the $100,000 limitation will be allocated under paragraph (a)(2)(ii) of this section as follows:

Corporation	Expenditure	Fraction		Limitation		Allocable portion
X	$25,000	$\frac{25,000}{200,000}$	×	$100,000	=	$12,500
Y	$75,000	$\frac{75,000}{200,000}$	×	$100,000	=	$37,500
Z	$125,000	$\frac{100,000}{200,000}$	×	$100,000	=	$50,000

The denominator of $200,000 was calculated as follows:

X=$25,000
Y=$75,000
Z=$100,000 (maximum amount allowed if filed separately)
Total $200,000.

Example 3. Assume the same facts as in example (2) and that on January 1, 1971, X acquired all of the stock of corporation T which prior to its taxable year beginning January 1, 1971, had previously deducted (or deferred) $310,000 of exploration expenditures. Assume further that in 1971 X incurred $25,000 of foreign exploration expenditures, Y $50,000, T $50,000, and Z none. A consolidated return is filed for 1971. None of the expenditures may be deducted under section 617 since the consolidated exploration limitation is zero. The limitation is zero since the aggregate amount of previously deducted (or deferred) exploration expenditures by the members of the group exceeds $400,000. (The total of such expenditures is $410,000, of which $310,000 is attributable to T and, assuming the allocation of the limitation in example (2) is made under paragraph (a)(2)(ii) of this section, $12,500 is attributable to X, $37,500 to Y, and $50,000 to Z.

Example 4. Assume the same facts as in example (3) except that on December 31, 1971, X sold all of the stock in Z to an unrelated party. The consolidated exploration limitation for 1972 will be $40,000, computed by subtracting from $400,000, the aggregate amount of previously deducted (or deferred) exploration expenditures incurred by the members of the group prior to 1972. (The total of such expenditures is $360,000, of which $12,500 is attributable to X, $37,500 to Y and $310,000 to T.) Amounts previously deducted (or deferred) by Z are not taken into account since it was not a member of the group at any time during 1972. Amounts previously deducted (or deferred) by Z shall be taken into account by it for subsequent separate return years.

[T.D. 7192, 37 FR 12949, June 30, 1972]

§ 1.1502–17 Methods of accounting.

(a) *General rule.* The method of accounting to be used by each member of the group shall be determined in accordance with the provisions of section 446 as if such member filed a separate return. For treatment of depreciable property after a transfer within the group, see paragraph (g) of § 1.1502–12.

(b) *Adjustments required if method of accounting changes*—(1) *General rule.* If a member of a group changes its method of accounting for a consolidated return year, the terms and conditions prescribed by the Commissioner under section 446(e), including section 481(a) where applicable, shall apply to the member. If the requirements of section 481(b) are met because applicable adjustments under section 481(a) are substantial, the increase in tax for any prior year shall be computed upon the

basis of a consolidated return or a separate return, whichever was filed for such prior year.

(2) *Changes in method of accounting for intercompany transactions.* If a member changes its method of accounting for intercompany transactions for a consolidated return year, the change in method generally will be effected on a cut-off basis.

(c) *Anti-avoidance rules*—(1) *General rule.* If one member (B) directly or indirectly acquires an activity of another member (S), or undertakes S's activity, with the principal purpose to avail the group of an accounting method that would be unavailable (or would be unavailable without securing consent from the Commissioner) if S and B were treated as divisions of a single corporation, B must use the accounting method for the acquired or undertaken activity determined under paragraph (c)(2) of this section or must secure consent from the Commissioner under applicable administrative procedures to use a different method.

(2) *Treatment as divisions of a single corporation.* B must use the method of accounting that would be required if B acquired the activity from S in a transaction to which section 381 applied. Thus, the principles of section 381 (c)(4) and (c)(5) apply to resolve any conflicts between the accounting methods of S and B, and the acquired or undertaken activity is treated as having the accounting method used by S. Appropriate adjustments are made to treat all acquisitions or undertakings that are part of the same plan or arrangement as a single acquisition or undertaking.

(d) *Examples.* The provisions of this section are illustrated by the following examples:

Example 1. Separate return treatment generally. X and its wholly-owned subsidiary Y filed separate returns for their calendar years ending December 31, 1965. During calendar year 1965, X employed an accrual method of accounting, established a reserve for bad debts, and elected under section 171 to amortize bond premiums with respect to its fully taxable bonds. During calendar year 1965, Y employed the cash receipts and disbursements method, used the specific charge-off method with respect to its bad debts, and did not elect to amortize bond premiums under section 171 with respect to its bonds. X and Y filed a consolidated return for 1966. For 1966 X and Y must continue to compute income under their respective methods of accounting (unless a change in method under section 446 is made).

Example 2. Adopting methods. Corporation P is a member of a consolidated group. P provides consulting services to customers under various agreements. For one type of customer, P's agreements require payment only when the contract is completed (payment-on-completion contracts). P uses an overall accrual method of accounting. Accordingly, P takes its income from consulting contracts into account when earned, received, or due, whichever is earlier. With the principal purpose to avoid seeking the consent of the Commissioner to change its method of accounting for the payment-on-completion contracts to the cash method, P forms corporation S, and S begins to render services to those customers subject to the payment-on-completion contracts. P continues to render services to those customers not subject to these contracts.

(b) Under paragraph (c) of this section, S must account for the consulting income under the payment-on-completion contracts on an accrual method rather than adopting the cash method contemplated by P.

Example 3. Changing inventory sub-method. (a) Corporation P is a member of a consolidated group. P operates a manufacturing business that uses dollar-value LIFO, and has built up a substantial LIFO reserve. P has historically manufactured all its inventory and has used one natural business unit pool. P begins purchasing goods identical to its own finished goods from a foreign supplier, and is concerned that it must establish a separate resale pool under §1.472–8(c). P anticipates that it will begin to purchase, rather than manufacture, a substantial portion of its inventory, resulting in a recapture of most of its LIFO reserve because of decrements in its manufacturing pool. With the principal purpose to avoid the decrements, P forms corporation S in Year 1. S operates as a distributor to nonmembers, and P sells all of its existing inventories to S. S adopts LIFO, and elects dollar-value LIFO with one resale pool. Thereafter, P continues to manufacture and purchase inventory, and to sell it to S for resale to nonmembers. P's intercompany gain from sales to S is taken into account under §1.1502–13. S maintains its Year 1 base dollar value of inventory so that P will not be required to take its intercompany items (which include the effects of the LIFO reserve recapture) into account.

(b) Under paragraph (c) of this section, S must maintain two pools (manufacturing and resale) to the same extent that P would be required to maintain those pools under §1.472–8 if it had not formed S.

(e) *Effective dates.* Paragraph (b) of this section applies to changes in method of accounting effective for years beginning on or after July 12, 1995. For changes in method of accounting effective for years beginning before that date, see § 1.1502–17 (as contained in the 26 CFR part 1 edition revised as of April 1, 1995). Paragraphs (c) and (d) apply with respect to acquisitions occurring or activities undertaken in years beginning on or after July 12, 1995.

[T.D. 6894, 31 FR 11794, Sept. 8, 1966, as amended by T.D. 8597, 60 FR 36708, July 18, 1995]

§ 1.1502–18 Inventory adjustment.

(a) *Definition of intercompany profit amount.* For purposes of this section, the term ''intercompany profit amount'' for a taxable year means an amount equal to the profits of a corporation (other than those profits which such corporation has elected not to defer pursuant to § 1.1502– 13(c)(3) or which have been taken into account pursuant to § 1.1502–13(f)(1)(viii)) arising in transactions with other members of the group with respect to goods which are, at the close of such corporation's taxable year, included in the inventories of any member of the group. See § 1.1502–13(c)(2) with respect to the determination of profits. See the last sentence of § 1.1502–13(f)(1)(i) for rules for determining which goods are considered to be disposed of outside the group and therefore not included in inventories of members.

(b) *Addition of initial inventory amount to taxable income.* If a corporation:

(1) Is a member of a group filing a consolidated return for the taxable year,

(2) Was a member of such group for its immediately preceding taxable year, and

(3) Filed a separate return for such preceding year,

then the intercompany profit amount of such corporation for such separate return year (hereinafter referred to as the ''initial inventory amount'') shall be added to the income of such corporation for the consolidated return year (or years) in which the goods to which the initial inventory amount is attributable are disposed of outside the group or such corporation becomes a nonmember. Such amount shall be treated as gain from the sale or exchange of property which is neither a capital asset nor property described in section 1231.

(c) *Recovery of initial inventory amount*—(1) *Unrecovered inventory amount.* The term ''unrecovered inventory amount'' for any consolidated return year means the lesser of:

(i) The intercompany profit amount for such year, or

(ii) The initial inventory amount.

However, if a corporation ceases to be a member of the group during a consolidated return year, its unrecovered inventory amount for such year shall be considered to be zero.

(2) *Recovery during consolidated return years.* (i) To the extent that the unrecovered inventory amount of a corporation for a consolidated return year is less than such amount for its immediately preceding year, such decrease shall be treated for such year by such corporation as a loss from the sale or exchange of property which is neither a capital asset nor property described in section 1231.

(ii) To the extent that the unrecovered inventory amount for a consolidated return year exceeds such amount for the preceding year, such increase shall be treated as gain from the sale or exchange of property which is neither a capital asset nor property described in section 1231.

(3) *Recovery during first separate return year.* For the first separate return year of a member following a consolidated return year, the unrecovered inventory amount for such consolidated return year (minus any part of the initial inventory amount which has not been added to income pursuant to paragraph (b) of this section) shall be treated as a loss from the sale or exchange of property which is neither a capital asset nor property described in section 1231.

(4) *Acquisition of group.* For purposes of this section, a member of a group shall not become a nonmember or be considered as filing a separate return solely because of a termination of the group (hereinafter referred to as the ''terminating group'') resulting from:

(i) The acquisition by a nonmember corporation of (*a*) the assets of the

common parent in a reorganization described in subparagraph (A), (C), or (D) (but only if the requirements of subparagraphs (A) and (B) of section 354(b)(1) are met) of section 368 (a)(1), or (b) stock of the common parent, or

(ii) The acquisition (in a transaction to which §1.1502–75(d)(3) applies) by a member of (*a*) the assets of a nonmember corporation in a reorganization referred to in subdivision (i) of this subparagraph, or (*b*) stock of a nonmember corporation,

if all the members of the terminating group (other than such common parent if its assets are acquired) immediately before the acquisition are members immediately after the acquisition of another group (hereinafter referred to as the ''succeeding group'') which files a consolidated return for the first taxable year ending after the date of acquisition. The members of the succeeding group shall succeed to any initial inventory amount and to any unrecovered inventory amount of members of the terminating group. This subparagraph shall not apply with respect to acquisitions occurring before August 25, 1971.

(d) *Examples*. The provisions of paragraphs (a), (b), and (c) of this section may be illustrated by the following examples:

Example 1. Corporations P, S, and T report income on the basis of a calendar year. Such corporations file separate returns for 1965. P manufactures widgets which it sells to both S and T, who act as distributors. The inventories of S and T at the close of 1965 are comprised of widgets which they purchased from P and with respect to which P derived profits of $5,000 and $8,000, respectively. P, S, and T file a consolidated return for 1966. During 1966, P sells widgets to S and T with respect to which it derives profits of $7,000 and $10,000, respectively. The inventories of S and T as of December 31, 1966, are comprised of widgets on which P derived net profits of $4,000 and $8,000, respectively. P's initial inventory amount is $13,000, P's intercompany profit amount for 1965 (such $13,000 amount is the profits of P with respect to goods sold to S and T and included in their inventories at the close of 1965). Assuming that S and T identify their goods on a first-in, first-out basis, the entire opening inventory amount of $13,000 is added to P's income for 1966 as gain from the sale or exchange of property which is neither a capital asset nor properly described in section 1231, since the goods to which the initial inventory amount is attributable were disposed of in 1966 outside the group. However, since P's unrecovered inventory amount for 1966, $12,000 (the intercompany profit amount for the year, which is less than the initial inventory amount), is less than the unrecovered inventory amount for 1965, $13,000, this decrease of $1,000 is treated by P for 1966 as a loss from the sale or exchange of property which is neither a capital asset nor property described in section 1231.

Example 2. Assume the same facts as in example (1) and that at the close of 1967, a consolidated return year, the inventories of S and T are comprised of widgets on which P derived profits of $5,000 and $3,000, respectively. Since P's unrecovered inventory amount for 1967, $8,000, is less than $12,000, the unrecovered inventory amount for 1966, this decrease of $4,000 is treated by P for 1967 as a loss from the sale or exchange of property which is neither a capital asset nor property described in section 1231.

Example 3. Assume the same facts as in examples (1) and (2) and that in 1968, a consolidated return year, P's intercompany profit amount is $11,000. P will report $3,000 (the excess of $11,000, P's unrecovered inventory amount for 1968, over $8,000, P's unrecovered inventory amount for 1967) for 1968 as a gain from the sale or exchange of property which is neither a capital asset nor property described in section 1231.

Example 4. Assume the same facts as in examples (1), (2), and (3) and that in 1969 P, S, and T file separate returns. P will report $11,000 (its unrecovered inventory amount for 1968, $11,000, minus the portion of the initial inventory amount which has not been added to income during 1966, 1967, and 1968, zero) as a loss from the sale or exchange of property which is neither a capital asset nor property described in section 1231.

Example 5. Corporations P and S file a consolidated return for the first time for the calendar year 1966. P manufactures machines and sells them to S, which sells them to users throughout the country. At the close of 1965, S has on hand 20 machines which it purchased from P and with respect to which P derived profits of $3,500. During 1966, P sells 6 machines to S on which it derives profits of $1,300, and S sells 5 machines which it had on hand at the beginning of the year (S specifically identifies the machines which it sells) and on which P had derived profits of $900. P's initial inventory amount is $3,500, of which $900 is added to P's income in 1966 as gain from the sale or exchange of property which is neither a capital asset nor property described in section 1231, since such $900 amount is attributable to goods disposed of in 1966 outside the group, which goods were included in S's inventory at the close of 1965. If P and S continue to file consolidated returns, the remaining $2,600 of the initial inventory amount will be added to P's income

as the machines on which such profits were derived are disposed of outside the group.

Example 6. Assume that in example (5) S had elected to inventory its goods under section 472 (relating to last-in, first-out inventories). None of P's initial inventory amount of $3,500 would be added to P's income in 1966, since none of the goods to which such amount is attributable would be considered to be disposed of during such year under the last-in, first-out method of identifying inventories.

(e) *Section 381 transfer.* If a member of the group is a transferor or distributor of assets to another member of the group within the meaning of section 381(a), then the acquiring corporation shall be treated as succeeding to the initial inventory amount of the transferor or distributor corporation to the extent that as of the date of distribution or transfer such amount has not yet been added to income. Such amount shall then be added to the acquiring corporation's income under the provisions of paragraph (b) of this section. For purposes of applying paragraph (c) of this section:

(1) The initial inventory amount of the transferor or distributor corporation shall be added to such amount of the acquiring corporation as of the close of the acquiring corporation's taxable year in which the date of distribution or transfer occurs, and

(2) The unrecovered inventory amount of the transferor or distributor corporation for its taxable year preceding the taxable year of the group in which the date of distribution or transfer occurs shall be added to such amount of the acquiring corporation.

(f) *Transitional rules for years before 1966*—(1) *In general.* If:

(i) A group filed a consolidated return for the taxable year immediately preceding the first taxable year to which this section applies,

(ii) Any member of such group made an opening adjustment to its inventory pursuant to paragraph (b) of § 1.1502–39A (as contained in the 26 CFR edition revised as of April 1, 1996), and

(iii) Paragraph (c) of § 1.1502–39A (as contained in the 26 CFR edition revised as of April 1, 1996), has not been applicable for any taxable year subsequent to the taxable year for which such adjustment was made,

then subparagraphs (2) and (3) of this paragraph shall apply.

(2) *Closing adjustment to inventory.* (i) For the first consolidated return year to which this section applies, the increase in inventory prescribed in paragraph (c) of § 1.1502–39A (as contained in the 26 CFR edition revised as of April 1, 1996), shall be made as if such year were a separate return year.

(ii) For the first separate return year of a member to which this section applies, the adjustment to inventory (whether an increase or a decrease) prescribed in paragraph (c) of § 1.1502–39A (as contained in the 26 CFR edition revised as of April 1, 1996), minus any adjustment already made pursuant to subdivision (i) of this subparagraph, shall be made to the inventory of such member.

(3) *Addition and recovery of initial inventory amount.* Each selling member shall treat as an initial inventory amount its share of the net amount by which the inventories of all members are increased pursuant to subparagraph (2)(i) of this paragraph for the first taxable year to which this section applies. A member's share shall be such net amount multiplied by a fraction, the numerator of which is its initial inventory amount (computed under paragraph (b) as if such taxable year were its first consolidated return year), and the denominator of which is the sum of such initial inventory amounts of all members. Such initial inventory amount shall be added to the income of such selling member and shall be recovered at the time and in the manner prescribed in paragraphs (b) and (c) of this section.

(4) *Example.* The provisions of this paragraph may be illustrated by the following example:

Example. (i) Corporations P, S, and T file consolidated returns for calendar 1966, having filed consolidated returns continuously since 1962. P is a wholesale distributor of groceries selling to chains of supermarkets, including those owned by S and T. The opening inventories of S and T for 1962 were reduced by $40,000 and $80,000, respectively, pursuant to paragraph (b) of § 1.1502–39A (as contained in the 26 CFR edition revised as of April 1, 1996). At the close of 1965, S and T have on hand in their inventories goods on which P derived profits of $80,000 and $90,000, respectively. The inventories of S and T at

the close of 1966 include goods which they purchased from P during the year on which P derived profits of $85,000 and $105,000, respectively.

(ii) The opening inventories of S and T for 1966, the first year to which this section applies, are increased by $40,000 and $80,000, respectively, pursuant to the provisions of subparagraph (2)(i) of this paragraph. P will take into account (as provided in paragraphs (b) and (c) of this section) an initial inventory amount of $120,000 as of the beginning of 1966, the net amount by which the inventories of S and T were increased in such year. Since the increases in the inventories of S and T are the maximum allowable under paragraph (c) of § 1.1502–39A (as contained in the 26 CFR edition revised as of April 1, 1996) (i.e., the amount by which such inventories were originally decreased), no further adjustments will be made pursuant to subparagraph (2)(ii) of this paragraph to such inventories in the event that separate returns are subsequently filed.

(5) *Election not to eliminate*. If a group filed a consolidated return for the taxable year immediately preceding the first taxable year to which this section applies, and for such preceding year the members of the group did not eliminate gain or loss on intercompany inventory transactions pursuant to the adoption under § 1.1502–31A(b)(1) (as contained in the 26 CFR edition revised as of April 1, 1996) of a consistent accounting practice taking into account such gain or loss, then for purposes of this section each member shall be treated as if it had filed a separate return for such immediately preceding year.

(g) *Transitional rules for years beginning on or after July 12, 1995*. Paragraphs (a) through (f) of this section do not apply for taxable years beginning on or after July 12, 1995. Any remaining unrecovered inventory amount of a member under paragraph (c) of this section is recovered in the first taxable year beginning on or after July 12, 1995, under the principles of paragraph (c)(3) of this section by treating the first taxable year as the first separate return year of the member. The unrecovered inventory amount can be recovered only to the extent it was previously included in taxable income. The principles of this section apply, with appropriate adjustments, to comparable amounts under paragraph (f) of this section.

[T.D. 6894, 31 FR 11794, Sept. 8, 1966, as amended by T.D. 7246, 38 FR 762, Jan. 4, 1973; T.D. 8597, 60 FR 36709, July 18, 1995: T.D. 8677, 61 FR 33323, June 27, 1996]

§ 1.1502–19 Excess loss accounts.

(a) *In general*—(1) *Purpose*. This section provides rules for a member (M) to include in income its excess loss account in the stock of another member (S). The purpose of the excess loss account is to recapture in consolidated taxable income M's negative adjustments with respect to S's stock (e.g., under § 1.1502–32 from S's deductions, losses, and distributions), to the extent the negative adjustments exceed M's basis in the stock. This section also provides rules for eliminating losses and other attributes attributable to S in certain cases in which S stock becomes worthless or S ceases to be a member and does not have a separate return year.

(2) *Excess loss accounts*—(i) *In general*. M's basis in S's stock is adjusted under the consolidated return regulations and other rules of law. Negative adjustments may exceed M's basis in S's stock. The resulting negative amount is M's excess loss account in S's stock. For example:

(A) Once M's negative adjustments under § 1.1502–32 exceed its basis in S's stock, the excess is M's excess loss account in the S stock. If M has further adjustments, they first increase or decrease the excess loss account.

(B) If M forms S by transferring property subject to liabilities in excess of basis, § 1.1502–80(d) provides for the nonapplicability of section 357(c) and the resulting negative basis under section 358 is M's excess loss account in the S stock.

(ii) *Treatment as negative basis*. M's excess loss account is treated for all Federal income tax purposes as basis that is a negative amount, and a reference to M's basis in S's stock includes a reference to M's excess loss account.

(3) *Application of other rules of law, duplicative recapture*. See § 1.1502–80(a) regarding the general applicability of other rules of law and a limitation on duplicative adjustments and recapture.

(b) *Excess loss account taken into account as income or gain*—(1) *Operating rules*—(i) *General rule*. Except as provided in paragraph (b)(1)(ii) of this section, if M is treated under this section as disposing of a share of S's stock, M takes into account its excess loss account in the share as income or gain from the disposition.

(ii) *Special limitation on amount taken into account*. Notwithstanding paragraph (b)(1)(i) of this section, if M is treated as disposing of a share of S's stock as a result of the application of paragraph (c)(1)(iii)(B) of this section, the aggregate amount of its excess loss account in the shares of S's stock that M takes into account as income or gain from the disposition shall not exceed the amount of S's indebtedness that is discharged that is neither included in gross income nor treated as tax-exempt income under §1.1502–32(b)(3)(ii)(C)(*1*). If more than one share of S's stock has an excess loss account, such excess loss accounts shall be taken into account pursuant to the preceding sentence, to the extent possible, in a manner that equalizes the excess loss accounts in S's shares that have an excess loss account.

(iii) *Treatment of disposition*. Except as provided in paragraph (b)(4) of this section, the disposition is treated as a sale or exchange for purposes of determining the character of the income or gain.

(iv) *Reduction of attributes in the case of certain dispositions by worthlessness or where S ceases to be a member and does not become a nonmember*. If this paragraph (b)(1)(iv) applies, any net operating or capital loss carryover that is attributable to S, including any losses that would be apportioned to S under the principles of §1.1502–21(b)(2) if S had a separate return year, any deferred deductions attributable to S, including S's portion of such consolidated tax attributes (for example, consolidated excess charitable contributions that would be apportioned to S under the principles of §1.1502–79(e) if S had a separate return year), and any credit carryover attributable to S, including any consolidated credits that would be apportioned to S under the principles of §1.1502–79 if S had a separate return year, are eliminated. Attributes other than consolidated tax attributes (determined as of the disposition) are eliminated under this paragraph (b)(1)(iv) immediately before the disposition resulting in the application of this paragraph (b)(1)(iv). The elimination of attributes under this paragraph (b)(1)(iv) is not a noncapital, nondeductible expense described in §1.1502–32(b)(2)(iii). This paragraph (b)(1)(iv) applies if—

(A) A share of S stock becomes worthless under section 165, the requirements of paragraph (c)(1)(iii) of this section are satisfied, M does not recognize a net deduction or loss on the S stock, and S is a member of the group on the day following the last day of the group's taxable year during which the share becomes worthless; or

(B) M recognizes any amount that is not a net deduction or loss on the stock of S in a transaction in which S ceases to be a member and does not become a nonmember.

(2) *Nonrecognition or deferral*—(i) *In general*. M's income or gain under paragraph (b)(1) of this section is subject to any nonrecognition or deferral rules applicable to the disposition. For example, if S liquidates and the exchange of M's stock in S is subject to section 332, or M transfers all of its assets (including S's stock) to S in a reorganization to which section 361(a) applies, M's income or gain from the excess loss account is not recognized under these rules.

(ii) *Nonrecognition or deferral inapplicable*. If M's income or gain under paragraph (b)(1) of this section is from a disposition described in paragraph (c)(1) (ii) or (iii) of this section (relating to deconsolidations and worthlessness), the income or gain is taken into account notwithstanding any nonrecognition or deferral rules (even if the disposition is also described in paragraph (c)(1)(i) of this section). For example, if M transfers S's stock to a nonmember in a transaction to which section 351 applies, M's income or gain from the excess loss account is taken into account.

(3) *Tiering up in chains*. If the stock of more than one subsidiary is disposed of in the same transaction, the income or gain under this section is taken into

account in the order of the tiers, from the lowest to the highest.

(4) *Insolvency*—(i) *In general*. Gain under this section is treated as ordinary income to the extent of the amount by which S is insolvent (within the meaning of section 108(d)(3)) immediately before the disposition. For this purpose S's liabilities include any amount to which preferred stock would be entitled if S were liquidated immediately before the disposition, and any former liabilities that were discharged to the extent the discharge was treated as tax-exempt income under §1.1502–32(b)(3)(ii)(C) (special rule for discharges).

(ii) *Reduction for amount of distributions*. The amount treated as ordinary income under this paragraph (b)(4) is reduced to the extent it exceeds the amount of M's excess loss account redetermined without taking into account S's distributions to M to which §1.1502–32(b)(2)(iv) applies.

(c) *Disposition of stock*. For purposes of this section:

(1) *In general*. M is treated as disposing of a share of S's stock:

(i) *Transfer, cancellation, etc*. At the time—

(A) M transfers or otherwise ceases to own the share for Federal income tax purposes, even if no gain or loss is taken into account; or

(B) M takes into account gain or loss (in whole or in part) with respect to the share.

(ii) *Deconsolidation*. At the time—

(A) M becomes a nonmember, or a nonmember determines its basis in the share (or any other asset) by reference to M's basis in the share, directly or indirectly, in whole or in part (e.g., under section 362); or

(B) S becomes a nonmember, or M's basis in the share is reflected, directly or indirectly, in whole or in part, in the basis of any asset other than member stock (e.g., under section 1071).

(iii) *Worthlessness*. At the time—

(A) All of S's assets (other than its corporate charter and those assets, if any, necessary to satisfy state law minimum capital requirements to maintain corporate existence) are treated as disposed of, abandoned, or destroyed for Federal income tax purposes (for example, under section 165(a) or §1.1502–80(c), or, if S's asset is stock of a lower-tier member, the stock is treated as disposed of under this paragraph (c)). An asset of S is not considered to be disposed of or abandoned to the extent the disposition is in complete liquidation of S under section 332 or is in exchange for consideration (other than relief from indebtedness);

(B) An indebtedness of S is discharged, if any part of the amount discharged is not included in gross income and is not treated as tax-exempt income under §1.1502–32(b)(3)(ii)(C); or

(C) A member takes into account a deduction or loss for the uncollectibility of an indebtedness of S, and the deduction or loss is not matched in the same tax year by S's taking into account a corresponding amount of income or gain from the indebtedness in determining consolidated taxable income.

(2) *Becoming a nonmember*. A member is treated as becoming a nonmember if it has a separate return year (including another group's consolidated return year). For example, S may become a nonmember if it issues additional stock to nonmembers, but S does not become a nonmember as a result of its complete liquidation. A disposition under paragraph (c)(1)(ii) of this section must be taken into account in the consolidated return of the group. For example, if a group ceases under §1.1502–75(c) to file a consolidated return as of the close of its consolidated return year, the disposition under paragraph (c)(1)(ii) of this section is treated as occurring immediately before the close of the year. If S becomes a nonmember because M sells S's stock to a nonmember, M's sale is a disposition under both paragraphs (c)(1) (i) and (ii) of this section. If a group terminates under §1.1502–75(d) because the common parent is the only remaining member, the common parent is not treated as having a deconsolidation event under paragraph (c)(1)(ii) of this section.

(3) *Exception for acquisition of group*—(i) *Application*. This paragraph (c)(3) applies only if a consolidated group (the terminating group) ceases to exist as a result of—

(A) The acquisition of either the assets of the common parent of the terminating group in a reorganization described in section 381(a)(2), or the stock of the common parent of the terminating group; or

(B) The application of the principles of § 1.1502–75(d)(2) or (d)(3).

(ii) *General rule.* Paragraph (c)(1)(ii) of this section does not apply solely by reason of the termination of a group in a transaction to which this paragraph (c)(3) applies, if there is a surviving group that is, immediately thereafter, a consolidated group. Instead, the surviving group is treated as the terminating group for purposes of applying this section to the terminating group. This treatment does not apply, however, to members of the terminating group that are not members of the surviving group immediately after the terminating group ceases to exist (e.g., under section 1504(a)(3) relating to reconsolidation, or section 1504(c) relating to includible insurance companies).

(d) *Special allocation of basis in connection with an adjustment or determination*—(1) *Excess loss account in original shares.* If a member has an excess loss account in shares of a class of S's stock at the time of a basis adjustment or determination under the Internal Revenue Code with respect to shares of the same class of S's stock owned by the member, the adjustment or determination is allocated first to equalize and eliminate that member's excess loss account. See § 1.1502–32(c) for similar allocations of investment adjustments to prevent or eliminate excess loss accounts.

(2) *Excess loss account in new S shares.* If a member would otherwise determine shares of a class of S's stock (new shares) to have an excess loss account and such member owns one or more other shares of the same class of S's stock, the basis of such other shares is allocated to eliminate and equalize any excess loss account that would otherwise be in the new shares.

(e) *Anti-avoidance rule.* If any person acts with a principal purpose contrary to the purposes of this section, to avoid the effect of the rules of this section or apply the rules of this section to avoid the effect of any other provision of the consolidated return regulations, adjustments must be made as necessary to carry out the purposes of this section.

(f) *Predecessors and successors.* For purposes of this section, any reference to a corporation (or to a share of the corporation's stock) includes a reference to a successor or predecessor (or to a share of stock of a predecessor or successor), as the context may require.

(g) *Examples.* For purposes of the examples in this section, unless otherwise stated, M owns all 100 shares of the only class of S's stock and S owns all 100 shares of the only class of T's stock, the stock is owned for the entire year, T owns no stock of lower-tier members, the tax year of all persons is the calendar year, all persons use the accrual method of accounting, the facts set forth the only corporate activity, all transactions are between unrelated persons, and tax liabilities are disregarded. The principles of this section are illustrated by the following examples.

Example 1. Taxable disposition of stock. (a) *Facts.* M has a $150 basis in S's stock, and S has a $100 basis in T's stock. For Year 1, M has $500 of ordinary income, S has no income or loss, and T has a $200 ordinary loss. S sells T's stock to a nonmember for $60 at the close of Year 1.

(b) *Analysis.* Under paragraph (c) of this section, the sale is a disposition of T's stock at the close of Year 1 (the day of the sale). Under § 1.1502–32(b), T's loss results in S having a $100 excess loss account in T's stock immediately before the sale. Under paragraph (b)(1) of this section, S takes into account the $100 excess loss account as an additional $100 of gain from the sale. Consequently, S takes into account a $160 gain from the sale in determining the group's consolidated taxable income. Under § 1.1502–32(b), T's $200 loss and S's $160 gain result in a net $40 decrease in M's basis in S's stock as of the close of Year 1, from $150 to $110.

(c) *Intercompany sale followed by sale to nonmember.* The facts are the same as in paragraph (a) of this *Example 1,* except that S sells T's stock to M for $60 at the close of Year 1, and M sells T's stock to a nonmember at a gain at the beginning of Year 5. Under paragraph (c) of this section, S's sale is treated as a disposition of T's stock at the close of Year 1 (the day of the sale). Under § 1.1502–13 and paragraph (b)(2) of this section, S's $160 gain from the sale is deferred and taken into account in Year 5 as a result of M's sale of the T stock. Under § 1.1502–32(b), the absorption of T's $200 loss in Year

1 results in M having a $50 excess loss account in S's stock at the close of Year 1. In Year 5, S's $160 gain taken into account eliminates M's excess loss account in S's stock and increases M's basis in the stock to $110.

(d) *Intercompany distribution followed by sale to a nonmember*. The facts are the same as in paragraph (a) of this *Example 1*, except that the value of the T stock is $60 and S declares and distributes a dividend of all of the T stock to M at the close of Year 1, and M sells the T stock to a nonmember at a gain at the beginning of Year 5. Under paragraph (c) of this section, S's distribution is treated as a disposition of T's stock at the close of Year 1 (the day of the distribution). S's $100 excess loss account in T's stock is treated as additional gain under section 311(b) from the distribution. Under section 301(d), M's basis in the T stock is $60. Under §1.1502–13, and paragraph (b)(2) of this section, S's $160 gain from the distribution is deferred and taken into account in Year 5 as a result of M's sale of the T stock. Under §1.1502–32(b), T's $200 loss and S's $60 distribution result in M having a $110 excess loss account in S's stock at the close of Year 1. In Year 5, S's $160 gain taken into account eliminates M's excess loss account in S's stock and increases M's basis in the stock to $50.

Example 2. Basis determinations under the Internal Revenue Code in intercompany reorganizations—transfer of shares without an excess loss account. (i) *Facts*. M owns all of the sole class of stock of each of S and T. M has 150 shares of S stock that it acquired on Date 1. Each S share has a $1 basis and a fair market value of $1. M has 100 shares of T stock that it acquired on Date 2. Each T share has a $1.20 excess loss account and a fair market value of $1. M transfers S's stock to T without receiving additional T stock. The transfer is an exchange described in both section 351 and section 354.

(ii) *Analysis*. Under sections 351 and 354, M does not recognize gain in connection with the transfer. Under §1.358–2(a)(2)(iii), M is deemed to receive 150 shares of T stock of the same class. Without regard to the application of paragraph (d) of this section, under section 358 and §1.358–2(a)(2)(i), M would have a $1 basis in each such share. However, because the basis of the additional shares of T stock will be determined when M has an excess loss account in its original shares of T stock, under paragraph (d)(1) of this section, the basis that M would otherwise have in such additional shares will eliminate the excess loss account in M's original shares of T stock such that each original share of T stock will have a basis of $0 and each share of T stock deemed received will have a basis of $0.20. Then, under §1.358–2(a)(2)(iii), the T stock is deemed to be recapitalized in a reorganization under section 368(a)(1)(E) in which M receives 100 shares of T stock (those shares M actually owns immediately after the transfer) in exchange for those 100 shares of T stock that M held immediately prior to the transfer and those 150 shares of T stock M is deemed to receive in the transfer. Under §1.358–2(a)(2)(i), immediately after the transfer, M holds 100 shares of T stock, 60 of which take a basis of $0.50 each and 40 of which take a basis of $0 each. In addition, T takes a $1 basis in each share of S stock under section 362. (If M had actually received an additional 150 shares of T stock of the same class, paragraph (d)(1) of this section would apply to shift basis from such additional T shares to M's original T shares because the basis of the additional T stock would be determined when M had an excess loss account in its original T shares. M would have a basis of $0 in each of the original T shares and a basis of $0.20 in each of the additional T shares.)

(iii) *Transfer of shares with an excess loss account*. The facts are the same as in paragraph (i) of this *Example 2*, except that M transfers T's stock to S without receiving additional S stock. The transfer is an exchange described in both section 351 and section 354. Under paragraph (c) of this section, M's transfer is treated as a disposition of T's stock. Under sections 351 and 354 and paragraph (b)(2) of this section, M does not recognize gain from the disposition. Under §1.358–2(a)(2)(iii), M is deemed to have received 100 shares of S stock of the same class. Without regard to the application of paragraph (d) of this section, M would have a $1.20 excess loss account in each such share. However, because M will have an excess loss account in such shares and M owns other shares of S stock of the same class, under paragraph (d)(2) of this section, the excess loss account that M would otherwise have in such shares will decrease M's basis in its original shares of S's stock such that each such original share will have a basis of $0.20 and each share deemed received will have a basis of $0. Then, under §1.358–2(a)(2)(iii), the S stock is deemed to be recapitalized in a reorganization under section 368(a)(1)(E) in which M receives 150 shares of S stock (those shares M actually owns immediately after the transfer) in exchange for those 150 shares of S stock that M held immediately prior to the transfer and those 100 shares of S stock that M is deemed to receive in connection with the transfer. Under §1.358–2(a)(2)(i), immediately after the transfer, M holds 150 shares of S stock, 90 of which take a basis of $0.33 each and 60 of which take a basis of $0 each. In addition, S takes an excess loss account of $1.20 in each share of T stock under section 362. (If M had actually received 100 additional shares of S stock of the same class, paragraph (d)(2) of this section would apply to shift basis from M's original S stock because M would have otherwise had an excess loss account in such additional shares and M owned other shares

of S stock of the same class. The excess loss account that M would have otherwise had in such additional shares would have decreased M's basis in its original shares of S's stock. M would have had a basis of $0.20 in each of the original shares and a basis of $0 in each of the additional shares.)

(iv) *Intercompany merger—shares with excess loss account retained.* The facts are the same as in paragraph (i) of this *Example 2*, except that S merges into T in a reorganization described in section 368(a)(1)(A) (and in section 368(a)(1)(D)), and M receives 150 additional shares of T stock of the same class in the reorganization. Under section 354, M does not recognize gain. Without regard to the application of paragraph (d) of this section, under section 358 and §1.358–2(a)(2)(i), M would have a $1 basis in each such share. However, because the basis of the additional shares of T stock will be determined when M has an excess loss account in its original shares of T stock, under paragraph (d)(1) of this section, the basis that M would otherwise have in such additional shares eliminates the excess loss account in M's original shares of T stock such that each original share of T stock has a basis of $0 and each additional share of T stock has a basis of $0.20.

(v) *Intercompany merger—shares with excess loss account surrendered.* The facts are the same as in paragraph (i) of this *Example 2*, except that T merges into S in a reorganization described in section 368(a)(1)(A) (and in section 368(a)(1)(D)), and M receives 100 additional shares of S stock of the same class in the reorganization. Under section 354 and paragraph (b)(2) of this section, M does not recognize gain from the disposition. Without regard to the application of paragraph (d) of this section, under section 358 and §1.358–2(a)(2)(i), M would have a $1.20 excess loss account in each additional share of S stock received. However, because M would have an excess loss account in such shares and M owns other shares of S stock of the same class, under paragraph (d)(2) of this section, the excess loss account that M would otherwise have in such shares decreases M's basis in its original shares of S's stock such that each original share of S stock has a basis of $0.20 and each additional share of S stock has a basis of $0.

Example 3. Section 355 distribution of stock with an excess loss account. (a) *Facts.* M has a $30 excess loss account in S's stock, and S has a $90 excess loss account in T's stock. S distributes the T stock to M in a transaction to which section 355 applies, and neither M nor S recognizes any gain or loss. At the time of the distribution, the T stock represents 33% of the value of the S stock. Following the distribution, M's basis in the S stock is allocated under §1.358–2 in proportion to the fair market values of the S stock and the T stock.

(b) *Analysis.* Under paragraph (c) of this section, S's distribution of the T stock is treated as a disposition. Under section 355(c) and paragraph (b)(2) of this section, S does not recognize any gain from the distribution. Under section 358, S's excess loss account in the T stock is eliminated, and M's $30 excess loss account in the S stock is treated as basis allocated between the S stock and the T stock based on their relative values. Consequently, M has a $20 excess loss account in the S stock and a $10 excess loss account in the T stock. (If M had a $30 basis rather than a $30 excess loss account in the S stock, S would not recognize gain, its excess loss account in the T stock would be eliminated, and M's basis in the stock of S and T would be $20 and $10, respectively.)

(c) *Section 355 distribution to nonmember.* The facts are the same as in paragraph (a) of this *Example 3*, except that M also distributes the T stock to its shareholders in a transaction to which section 355 applies. Under paragraph (c) of this section, M's distribution is treated as a disposition of T's stock. Under paragraph (b)(2) of this section, because M's disposition is described in paragraph (c)(1)(ii) of this section, M's $10 excess loss account in the T stock must be taken into account at the time of the distribution, notwithstanding the nonrecognition rules of section 355(c).

Example 4. Deconsolidation of a member. (a) *Facts.* M has a $50 excess loss account in S's stock, and S has a $100 excess loss account in T's stock. T issues additional stock to a nonmember and, as a consequence, T becomes a nonmember.

(b) *Analysis.* Under paragraph (c)(2) of this section, S is treated as disposing of each of its shares of T's stock immediately before T becomes a nonmember. Under paragraph (b)(1) of this section, S takes into account its $100 excess loss account as gain from the sale or exchange of T's stock. Under §1.1502–32(b) of this section, S's $100 gain eliminates M's excess loss account in S's stock and increases M's basis in S's stock to $50.

(c) *Deconsolidation of a higher-tier member.* The facts are the same as in paragraph (a) of this *Example 4*, except that S (rather than T) issues the stock and, as a consequence, both S and T become nonmembers. Under paragraph (c)(2) of this section, M is treated as disposing of S's stock and S is treated as disposing of T's stock immediately before S and T become nonmembers. Under §1.1502–32(b) and paragraph (b)(3) of this section, because S and T become nonmembers in the same transaction and T is the lower-tier member, S is first treated under paragraph (b)(1) of this section as taking into account its $100 excess loss account as gain from the sale or exchange of T's stock. Under §1.1502–32(b), S's $100 gain eliminates M's excess loss account in S's stock and increases M's basis in

S's stock to $50 immediately before S becomes a nonmember. Thus, only S's $100 gain is taken into account in the determination of the group's consolidated taxable income.

(d) *Intercompany gain and deconsolidation.* The facts are the same as in paragraph (c) of this *Example 4*, except that T has $30 of gain that is deferred under §1.1502–13 and taken into account in determining consolidated taxable income immediately before T becomes a nonmember. Under §1.1502–32(b), T's $30 gain decreases S's excess loss account in T's stock from $100 to $70 immediately before S is treated as disposing of T's stock. Under paragraph (b)(1) of this section, S is treated as taking into account its $70 excess loss account as gain from the disposition of T's stock. Under §1.1502–32(b), S's $70 gain from the excess loss account and T's $30 deferred gain that is taken into account eliminate M's $50 excess loss account in S's stock and increase M's basis in S's stock to $50 immediately before S becomes a nonmember.

Example 5. Worthlessness. (a) *Facts.* M forms S with a $150 contribution, and S borrows $150. For Year 1, S has a $50 ordinary loss that is carried over as part of the group's consolidated net operating loss. For Year 2, M has $160 of ordinary income, and S has a $160 ordinary loss. Under §1.1502–32(b), S's loss results in M having a $10 excess loss account in S's stock. During Year 3, the value of S's assets (without taking S's liabilities into account) continues to decline and S's stock becomes worthless within the meaning of section 165(g) (without taking into account §1.1502–80(c)). For Year 4, S has $10 of ordinary income.

(b) *Analysis.* Under paragraph (c)(1)(iii)(A) of this section, M is not treated as disposing of S's stock in Year 3 solely because S's stock becomes worthless within the meaning of section 165(g) (taking S's liabilities into account). In addition, because S's stock is not treated as worthless, section 382(g)(4)(D) does not prevent the Year 1 consolidated net operating loss carryover from offsetting S's $10 of income in Year 4.

(c) *Discharge of indebtedness.* The facts are the same as in paragraph (a) of this *Example 5*, except that, instead of S's stock becoming worthless within the meaning of section 165(g), S's creditor discharges $40 of S's indebtedness during Year 3, S is insolvent by more than $40 before the discharge, the discharge is excluded from the M group's gross income under section 108(a), and $40 of the $50 consolidated net operating loss carryover attributable to S is eliminated under section 108(b). Under §1.1502- 32(b)(3)(ii)(C), S's $40 of discharge income is treated as tax-exempt income because there is a corresponding decrease under §1.1502–32(b)(3)(iii) for elimination of the loss carryover. Under paragraph (c)(1)(iii)(B) of this section, M is treated as disposing of S's stock if the amount discharged is not included in gross income and is not treated as tax-exempt income under §1.1502–32(b)(3)(ii)(C). Because the discharge is treated as tax-exempt income, M is not treated as disposing of S's stock by reason of the discharge.

Example 6. Avoiding worthlessness. (a) *Facts.* M forms S with a $100 contribution and S borrows $150. For Years 1 through 5, S has a $210 ordinary loss that is absorbed by the group. Under §1.1502–32(b), S's loss results in M having a $110 excess loss account in S's stock. S defaults on the indebtedness, but the creditor does not discharge the debt (or initiate collection procedures). At the beginning of Year 6, S ceases any substantial operations with respect to the assets, but maintains their ownership with a principal purpose to avoid M's taking into account its excess loss account in S's stock.

(b) *Analysis.* Under paragraph (c)(1)(iii)(A) of this section, M's excess loss account on each of its shares of S's stock ordinarily is taken into account at the time substantially all of S's assets are treated as disposed of, abandoned, or destroyed for Federal income tax purposes. Under paragraph (e) of this section, however, S's assets are not taken into account at the beginning of Year 6 for purposes of applying paragraph (c)(1)(iii)(A) of this section. Consequently, S is treated as worthless at the beginning of Year 6, and M's $110 excess loss account is taken into account.

(h) *Effective/applicability dates*—(1) *Application.* This section applies with respect to determinations of the basis of (including an excess loss account in) the stock of a member in consolidated return years beginning on or after January 1, 1995. However, taxpayers may apply paragraph (c)(3)(i)(A) of this section to transactions that occurred prior to September 17, 2008. Any such determination or redetermination does not, however, affect any prior period. Paragraphs (a)(3), (c)(1)(iii)(A), and (c)(3)(i)(A) of this section apply with respect to determinations and transactions occurring on or after September 17, 2008. However, taxpayers may elect to apply paragraph (c)(3)(i)(A) of this section to transactions that occurred prior to September 17, 2008. The last sentence of paragraph (a)(1) and paragraph (b)(1)(iv) of this section applies with respect to dispositions on or after December 16, 2008.

(2) *Dispositions of stock*—(i) *Dispositions of stock before effective date.* If M was treated as disposing of stock of S in a tax year beginning before January

1, 1995 (including, for example, a deemed disposition because S was worthless) under the rules of this section then in effect, the amount of M's income, gain, deduction, or loss, and the stock basis reflected in that amount, are not redetermined under paragraph (h)(1) of this section. See paragraph (h)(3) of this section for the applicable rules.

(ii) *Application of special limitation.* If M was treated as disposing of stock of S because S was treated as worthless as a result of the application of paragraph (c)(1)(iii)(B) of this section after August 29, 2003, the amount of M's income, gain, deduction, or loss, and the stock basis reflected in that amount, are determined or redetermined with regard to paragraph (b)(1)(ii) of this section. If M was treated as disposing of stock of S because S was treated as worthless as a result of the application of paragraph (c)(1)(iii)(B) of this section on or before August 29, 2003, the group may determine or redetermine the amount of M's income, gain, deduction, or loss, and the stock basis reflected in that amount with regard to paragraph (b)(1)(ii) of this section.

(iii) *Intercompany amounts.* For purposes of this paragraph (h)(2), a disposition does not include a transaction to which § 1.1502–13, § 1.1502–13T, § 1.1502–14, or § 1.1502–14T applies. Instead, the transaction is deemed to occur as the income, gain, deduction, or loss (if any) is taken into account.

(iv) *Intercompany reorganizations.* Paragraphs (d) and (g) *Example 2* of this section apply to transactions occurring on or after July 18, 2007. For transactions occurring on or after January 23, 2006, and before July 18, 2007, see § 1.1502–19T as contained in 26 CFR part 1 in effect April 1, 2007. For transactions occurring before January 23, 2006, see § 1.1502–19 as contained in 26 CFR part 1 in effect April 1, 2005.

(3) *Prior law.* For prior determinations, see prior regulations under section 1502 as in effect with respect to the determination. See, e.g., § 1.1502–19 as contained in the 26 CFR part 1 edition revised as of April 1, 1994. For guidance regarding determinations of the basis of the stock of a subsidiary acquired in an intercompany reorganization before January 23, 2006, see paragraph (d) and (g) *Example 2* of § 1.1502–19 as contained in the 26 CFR part 1 edition revised as of April 1, 2005.

[T.D. 8560, 59 FR 41677, Aug. 15, 1994, as amended by T.D. 8597, 62 FR 12097, Mar. 14, 1997; T.D. 9089, 68 FR 52490, Sept. 4, 2003; T.D. 9192, 70 FR 14403, Mar. 22, 2005; T.D. 9242, 71 FR 4274, Jan. 26, 2006; T.D. 9341, 72 FR 39314, July 18, 2007; T.D. 9424, 73 FR 53948, Sept. 17, 2008; 73 FR 62204, Oct. 20, 2008]

COMPUTATION OF CONSOLIDATED ITEMS

§ 1.1502–21 Net operating losses.

(a) *Consolidated net operating loss deduction.* The consolidated net operating loss deduction (or CNOL deduction) for any consolidated return year is the aggregate of the net operating loss carryovers and carrybacks to the year. The net operating loss carryovers and carrybacks consist of—

(1) Any CNOLs (as defined in paragraph (e) of this section) of the consolidated group; and

(2) Any net operating losses of the members arising in separate return years.

(b) *Net operating loss carryovers and carrybacks to consolidated return and separate return years.* Net operating losses of members arising during a consolidated return year are taken into account in determining the group's CNOL under paragraph (e) of this section for that year. Losses taken into account in determining the CNOL may be carried to other taxable years (whether consolidated or separate) only under this paragraph (b).

(1) *Carryovers and carrybacks generally.* The net operating loss carryovers and carrybacks to a taxable year are determined under the principles of section 172 and this section. Thus, losses permitted to be absorbed in a consolidated return year generally are absorbed in the order of the taxable years in which they arose, and losses carried from taxable years ending on the same date, and which are available to offset consolidated taxable income for the year, generally are absorbed on a pro rata basis. In addition, the amount of any CNOL absorbed by the group in any year is apportioned among members based on the percentage of the CNOL attributable to each member as of the beginning of the

year. The percentage of the CNOL attributable to a member is determined pursuant to paragraph (b)(2)(iv)(B) of this section. Additional rules provided under the Internal Revenue Code or regulations also apply. See, e.g., section 382(l)(2)(B) (if losses are carried from the same taxable year, losses subject to limitation under section 382 are absorbed before losses that are not subject to limitation under section 382). See paragraph (c)(1)(iii) of this section, *Example 2*, for an illustration of pro rata absorption of losses subject to a SRLY limitation.

(2) *Carryovers and carrybacks of CNOLs to separate return years*—(i) *In general*. If any CNOL that is attributable to a member may be carried to a separate return year of the member, the amount of the CNOL that is attributable to the member is apportioned to the member (apportioned loss) and carried to the separate return year. If carried back to a separate return year, the apportioned loss may not be carried back to an equivalent, or earlier, consolidated return year of the group; if carried over to a separate return year, the apportioned loss may not be carried over to an equivalent, or later, consolidated return year of the group.

(ii) *Special rules*—(A) *Year of departure from group*. If a corporation ceases to be a member during a consolidated return year, net operating loss carryovers attributable to the corporation are first carried to the consolidated return year, then are subject to reduction under section 108 and §1.1502–28 (regarding discharge of indebtedness income that is excluded from gross income under section 108(a)), and then are subject to reduction under §1.1502–36 (regarding transfers of loss shares of subsidiary stock). Only the amount that is neither absorbed by the group in that year nor reduced under section 108 and §1.1502–28 or under §1.1502–36 may be carried to the corporation's first separate return year. For rules concerning a member departing a subgroup, see paragraph (c)(2)(vii) of this section.

(B) *Offspring rule*. In the case of a member that has been a member continuously since its organization (determined without regard to whether the member is a successor to any other corporation), the CNOL attributable to the member is included in the carrybacks to consolidated return years before the member's existence. If the group did not file a consolidated return for a carryback year, the loss may be carried back to a separate return year of the common parent under paragraph (b)(2)(i) of this section, but only if the common parent was not a member of a different consolidated group or of an affiliated group filing separate returns for the year to which the loss is carried or any subsequent year in the carryback period. Following an acquisition described in §1.1502–75(d)(2) or (3), references to the common parent are to the corporation that was the common parent immediately before the acquisition.

(iii) *Equivalent years*. Taxable years are equivalent if they bear the same numerical relationship to the consolidated return year in which a CNOL arises, counting forward or backward from the year of the loss. For example, in the case of a member's third taxable year (which was a separate return year) that preceded the consolidated return year in which the loss arose, the equivalent year is the third consolidated return year preceding the consolidated return year in which the loss arose. See paragraph (b)(3)(iii) of this section for certain short taxable years that are disregarded in making this determination.

(iv) *Operating rules*—(A) *Amount of CNOL attributable to a member*. The amount of a CNOL that is attributable to a member shall equal the product of the CNOL and the percentage of the CNOL attributable to such member.

(B) *Percentage of CNOL attributable to a member*—(*1*) *In general*. Except as provided in paragraph (b)(2)(iv)(B)(*2*) of this section, the percentage of the CNOL attributable to a member shall equal the separate net operating loss of the member for the year of the loss divided by the sum of the separate net operating losses for that year of all members having such losses. For this purpose, the separate net operating loss of a member is determined by computing the CNOL by reference to only the member's items of income, gain, deduction, and loss, including the

member's losses and deductions actually absorbed by the group in the taxable year (whether or not absorbed by the member).

(*2*) *Special rules*—(*i*) *Carryback to a separate return year*. If a portion of the CNOL attributable to a member for a taxable year is carried back to a separate return year, the percentage of the CNOL attributable to each member as of immediately after such portion of the CNOL is carried back shall be recomputed pursuant to paragraph (b)(2)(iv)(B)(*2*)(*v*) of this section.

(*ii*) *Excluded discharge of indebtedness income*. If during a taxable year a member realizes discharge of indebtedness income that is excluded from gross income under section 108(a) and such amount reduces any portion of the CNOL attributable to any member pursuant to section 108 and §1.1502–28, the percentage of the CNOL attributable to each member as of immediately after the reduction of attributes pursuant to sections 108 and 1017 and §1.1502–28 shall be recomputed pursuant to paragraph (b)(2)(iv)(B)(*2*)(*v*) of this section.

(*iii*) *Departing member*. If during a taxable year a member that had a separate net operating loss for the year of the CNOL ceases to be a member, the percentage of the CNOL attributable to each member as of the first day of the following consolidated return year shall be recomputed pursuant to paragraph (b)(2)(iv)(B)(*2*)(*v*) of this section.

(*iv*) *Reduction of attributes for stock loss*. If during a taxable year a member does not cease to be a member of the group and any portion of the CNOL attributable to any member is reduced under §1.1502–36, the percentage of the CNOL attributable to each member as of immediately after the reduction of attributes under §1.1502–36 shall be recomputed pursuant to paragraph (b)(2)(iv)(B)(*2*)(*v*) of this section.

(*v*) *Recomputed percentage*. The recomputed percentage of the CNOL attributable to each member shall equal the unabsorbed CNOL attributable to the member at the time of the recomputation divided by the sum of the unabsorbed CNOL attributable to all of the members at the time of the recomputation. For purposes of the preceding sentence, a CNOL that is reduced under section 108 and §1.1502–28, or under §1.1502–36, or that is otherwise permanently disallowed or eliminated, shall be treated as absorbed.

(v) *Examples*. For purposes of the examples in this section, unless otherwise stated, all groups file consolidated returns, all corporations have calendar taxable years, the facts set forth the only corporate activity, value means fair market value and the adjusted basis of each asset equals its value, all transactions are with unrelated persons, and the application of any limitation or threshold under section 382 is disregarded. The principles of this paragraph (b)(2) are illustrated by the following examples:

Example 1. Offspring rule. (i) During Year 1, Individual A forms P and T, and they each file a separate return. P forms S on March 15 of Year 2, and P and S file a consolidated return. P acquires all the stock of T from Individual A at the beginning of Year 3, and T becomes a member of the P group. P's acquisition of T is not an ownership change within the meaning of section 382. P, S, and T sustain a $1,100 CNOL in Year 3 and, under paragraph (b)(2)(iv) of this section, the loss is attributable $200 to P, $300 to S, and $600 to T.

(ii) Of the $1,100 CNOL in Year 3, the $500 amount of the CNOL that is attributable to P and S ($200 + $300) may be carried to P's separate return in Year 1. Even though S was not in existence in Year 1, the $300 amount of the CNOL attributable to S may be carried back to P's separate return in Year 1 because S (unlike T) has been a member of the P group since its organization and P is a qualified parent under paragraph (b)(2)(ii)(B) of this section. To the extent not absorbed in that year, the loss may then be carried to the P group's return in Year 2. The $600 amount of the CNOL attributable to T is a net operating loss carryback to T's separate return in Year 1, and if not absorbed in Year 1, then to Year 2.

Example 2. Departing members. (i) The facts are the same as in *Example 1*. In addition, on June 15 of Year 4, P sells all the stock of T. The P group's consolidated return for Year 4 includes the income of T through June 15. T files a separate return for the period from June 16 through December 31.

(ii) $600 of the Year 3 CNOL attributable to T is apportioned to T and is carried back to its separate return in Year 1. To the extent the $600 is not absorbed in T's separate return in Year 1 or Year 2, it is carried to the consolidated return in Year 4 before being carried to T's separate return in Year 4. Any portion of the loss not absorbed in T's Year 1 or Year 2 or in the P group's Year 4 is then carried to T's separate return in Year 4.

Example 3. Offspring rule following acquisition. (i) Individual A owns all of the stock of P, the common parent of a consolidated group. In Year 1, B, an individual unrelated to Individual A, forms T. P acquires all of the stock of T at the beginning of Year 3, and T becomes a member of the P group. The P group has $200 of consolidated taxable income in Year 2, and $300 of consolidated taxable income in Year 3 (computed without regard to the CNOL deduction). At the beginning of Year 4, T forms a subsidiary, Y, in a transaction described in section 351. The P group has a $300 consolidated net operating loss in Year 4, and under paragraph (b)(2)(iv) of this section, the loss is attributable entirely to Y.

(ii) Even though Y was not in existence in Year 2, $300, the amount of the consolidated net operating loss attributable to Y, may be carried back to the P group's Year 2 consolidated return under paragraph (b)(2)(ii)(B) of this section because Y has been a member of the P group since its organization. To the extent not absorbed in that year, the loss may then be carried to the P group's consolidated return in Year 3.

(3) *Special rules*—(i) *Election to relinquish carryback.* A group may make an irrevocable election under section 172(b)(3) to relinquish the entire carryback period with respect to a CNOL for any consolidated return year. Except as provided in §1.1502–21(b)(3)(ii)(B), the election may not be made separately for any member (whether or not it remains a member), and must be made in a separate statement entitled ''THIS IS AN ELECTION UNDER §1.1502–21(b)(3)(i) TO WAIVE THE ENTIRE CARRYBACK PERIOD PURSUANT TO SECTION 172(b)(3) FOR THE [insert consolidated return year] CNOLs OF THE CONSOLIDATED GROUP OF WHICH [insert name and employer identification number of common parent] IS THE COMMON PARENT.'' The statement must be filed with the group's income tax return for the consolidated return year in which the loss arises. If the consolidated return year in which the loss arises begins before January 1, 2003, the statement making the election must be signed by the common parent. If the consolidated return year in which the loss arises begins after December 31, 2002, the election may be made in an unsigned statement.

(ii) *Special elections*—(A) *Groups that include insolvent financial institutions.* For rules applicable to relinquishing the entire carryback period with respect to losses attributable to insolvent financial institutions, see §301.6402–7 of this chapter.

(B) *Acquisition of member from another consolidated group.* If one or more members of a consolidated group becomes a member of another consolidated group, the acquiring group may make an irrevocable election to relinquish, with respect to all consolidated net operating losses attributable to the member, the portion of the carryback period for which the corporation was a member of another group, provided that any other corporation joining the acquiring group that was affiliated with the member immediately before it joined the acquiring group is also included in the waiver. This election is not a yearly election and applies to all losses that would otherwise be subject to a carryback to a former group under section 172. The election must be made in a separate statement entitled ''THIS IS AN ELECTION UNDER §1.1502–21(b)(3)(ii)(B)(*2*) TO WAIVE THE PRE-[insert first taxable year for which the member (or members) was not a member of another group] CARRYBACK PERIOD FOR THE CNOLs attributable to [insert names and employer identification number of members].'' The statement must be filed with the acquiring consolidated group's original income tax return for the year the corporation (or corporations) became a member. If the year in which the corporation (or corporations) became a member begins before January 1, 2003, the statement must be signed by the common parent and each of the members to which it applies. If the year in which the corporation (or corporations) became a member begins after December 31, 2002, the election may be made in an unsigned statement.

(C) [Reserved]. For further guidance, see §1.1502–21T(b)(3)(ii)(C).

(iii) *Short years in connection with transactions to which section 381(a) applies.* If a member distributes or transfers assets to a corporation that is a member immediately after the distribution or transfer in a transaction to which section 381(a) applies, the transaction does not cause the distributor or transferor to have a short year within the consolidated return

year of the group in which the transaction occurred that is counted as a separate year for purposes of determining the years to which a net operating loss may be carried.

(iv) *Special status losses.* [Reserved]

(v) [Reserved] For further guidance, *see* § 1.1502–21T(b)(3)(v).

(c) *Limitations on net operating loss carryovers and carrybacks from separate return limitation years*—(1) *SRLY limitation*—(i) *General rule.* Except as provided in paragraph (g) of this section (relating to an overlap with section 382), the aggregate of the net operating loss carryovers and carrybacks of a member arising (or treated as arising) in SRLYs that are included in the CNOL deductions for all consolidated return years of the group under paragraph (a) of this section may not exceed the aggregate consolidated taxable income for all consolidated return years of the group determined by reference to only the member's items of income, gain, deduction, and loss. For this purpose—

(A) Consolidated taxable income is computed without regard to CNOL deductions;

(B) Consolidated taxable income takes into account the member's losses and deductions (including capital losses) actually absorbed by the group in consolidated return years (whether or not absorbed by the member);

(C) In computing consolidated taxable income, the consolidated return years of the group include only those years, including the year to which the loss is carried, that the member has been continuously included in the group's consolidated return, but exclude—

(*1*) For carryovers, any years ending after the year to which the loss is carried; and

(*2*) For carrybacks, any years ending after the year in which the loss arose; and

(D) The treatment under § 1.1502–15 of a built-in loss as a hypothetical net operating loss carryover in the year recognized is solely for purposes of determining the limitation under this paragraph (c) with respect to the loss in that year and not for any other purpose. Thus, for purposes of determining consolidated taxable income for any other losses, a built-in loss allowed under this section in the year it arises is taken into account.

(ii) *Losses treated as arising in SRLYs.* If a net operating loss carryover or carryback did not arise in a SRLY but is attributable to a built-in loss (as defined under § 1.1502–15), the carryover or carryback is treated for purposes of this paragraph (c) as arising in a SRLY if the built-in loss was not allowed, after application of the SRLY limitation, in the year it arose. For an illustration, see § 1.1502–15(d), *Example 5.* But see § 1.1502–15(g)(1).

(iii) *Examples.* The principles of this paragraph (c)(1) are illustrated by the following examples:

Example 1. Determination of SRLY limitation. (i) Individual A owns P. In Year 1, Individual A forms T, and T sustains a $100 net operating loss that is carried forward. P acquires all the stock of T at the beginning of Year 2, and T becomes a member of the P group. The P group has $300 of consolidated taxable income in Year 2 (computed without regard to the CNOL deduction). Such consolidated taxable income would be $70 if determined by reference to only T's items.

(ii) T's $100 net operating loss carryover from Year 1 arose in a SRLY. See § 1.1502–1(f)(2)(iii). P's acquisition of T was not an ownership change as defined by section 382(g). Thus, the $100 net operating loss carryover is subject to the SRLY limitation in paragraph (c)(1) of this section. The SRLY limitation for Year 2 is consolidated taxable income determined by reference to only T's items, or $70. Thus, $70 of the loss is included under paragraph (a) of this section in the P group's CNOL deduction for Year 2.

(iii) The facts are the same as in paragraph (i) of this *Example 1,* except that such consolidated taxable income (computed without regard to the CNOL deduction and by reference to only T's items) for Year 2 is a loss (a CNOL) of $370. Because the SRLY limitation may not exceed the consolidated taxable income determined by reference to only T's items, and such items aggregate to a CNOL, T's $100 net operating loss carryover from Year 1 is not allowed under the SRLY limitation in Year 2. Moreover, if consolidated taxable income (computed without regard to the CNOL deduction and by reference to only T's items) did not exceed $370 in Year 3, the carryover would still be restricted under paragraph (c) of this section in Year 3, because the aggregate consolidated taxable income for all consolidated return years of the group computed by reference to only T's items would not be a positive amount.

Example 2. Net operating loss carryovers. (i) In Year 1, Individual A forms P, and P sustains a $40 net operating loss that is carried forward. P has no income in Year 2. Individual A also owns T which sustains a net operating loss of $50 in Year 2 that is carried forward. P acquires the stock of T from Individual A during Year 3, but T is not a member of the P group for each day of the year. P and T file separate returns and sustain net operating losses of $120 and $60, respectively, for Year 3. The P group files consolidated returns beginning in Year 4. During Year 4, the P group has $160 of consolidated taxable income (computed without regard to the CNOL deduction). Such consolidated taxable income would be $70 if determined by reference to only T's items. These results are summarized as follows:

	Separate	Separate	Separate/affiliated	Consolidated
	Year 1	Year 2	Year 3	Year 4
P	$ (40)	$0	$ (120)	$90
T	0	(50)	(60)	70
CTI				160

(ii) P's Year 1, Year 2, and Year 3 are not SRLYs with respect to the P group. See § 1.1502–1(f)(2)(i). Thus, P's $40 net operating loss arising in Year 1 and $120 net operating loss arising in Year 3 are not subject to the SRLY limitation under paragraph (c) of this section. Under the principles of section 172, paragraph (b) of this section requires that the loss arising in Year 1 be the first loss absorbed by the P group in Year 4. Absorption of this loss leaves $120 of the group's consolidated taxable income available for offset by other loss carryovers.

(iii) T's Year 2 and Year 3 are SRLYs with respect to the P group. See § 1.1502–1(f)(2)(ii). P's acquisition of T was not an ownership change as defined by section 382(g). Thus, T's $50 net operating loss arising in Year 2 and $60 net operating loss arising in Year 3 are subject to the SRLY limitation. Under paragraph (c)(1) of this section, the SRLY limitation for Year 4 is $70, and under paragraph (b) of this section, T's $50 loss from Year 2 must be included under paragraph (a) of this section in the P group's CNOL deduction for Year 4. The absorption of this loss leaves $70 of the group's consolidated taxable income available for offset by other loss carryovers.

(iv) P and T each carry over net operating losses to Year 4 from a taxable year ending on the same date (Year 3). The losses carried over from Year 3 total $180. Under paragraph (b) of this section, the losses carried over from Year 3 are absorbed on a pro rata basis, even though one arises in a SRLY and the other does not. However, the group cannot absorb more than $20 of T's $60 net operating loss arising in Year 3 because its $70 SRLY limitation for Year 4 is reduced by T's $50 Year 2 SRLY loss already included in the CNOL deduction for Year 4. Thus, the absorption of Year 3 losses is as follows:

Amount of P's Year 3 losses absorbed = $120/($120 + $20) × $70 = $60.

Amount of T's Year 3 losses absorbed = $20/($120 + $20) × $70 = $10.

(v) The absorption of $10 of T's Year 3 loss further reduces T's SRLY limitation to $10 ($70 of initial SRLY limitation, reduced by the $60 net operating loss already included in the CNOL deductions for Year 4 under paragraph (a) of this section).

(vi) P carries its remaining $60 Year 3 net operating loss and T carries its remaining $50 Year 3 net operating loss over to Year 5. Assume that, in Year 5, the P group has $90 of consolidated taxable income (computed without regard to the CNOL deduction). The group's CTI determined by reference to only T's items is a CNOL of $4. For Year 5, the CNOL deduction is $66, which includes $60 of P's Year 3 loss and $6 of T's Year 3 loss (the aggregate consolidated taxable income for Years 4 and 5 determined by reference to T's items, or $66, reduced by T's SRLY losses actually absorbed by the group in Year 4, or $60).

Example 3. Net operating loss carrybacks. (i) P owns all of the stock of S and T. The members of the P group contribute the following to the consolidated taxable income of the P group for Years 1, 2, and 3:

	Year 1	Year 2	Year 3	Total
P	$100	$60	$80	$240
S	20	20	30	70
T	30	10	(50)	(10)
CTI	150	90	60	300

(ii) P sells all of the stock of T to Individual A at the beginning of Year 4. For its Year 4 separate return year, T has a net operating loss of $30.

(iii) T's Year 4 is a SRLY with respect to the P group. See § 1.1502–1(f)(1). T's $30 net operating loss carryback to the P group from Year 4 is not allowed under paragraph (c) of this section to be included in the CNOL deduction under paragraph (a) of this section for Year 1, 2, or 3, because the P group's consolidated taxable income would not be a positive amount if determined by reference to only T's items for all consolidated return years through Year 4 (without regard to the $30 net operating loss). The $30 loss is carried forward to T's Year 5 and succeeding taxable years as provided under the Internal Revenue Code.

Example 4. Computation of SRLY limitation for built-in losses treated as net operating loss carryovers. (i) Individual A owns P. In Year 1, Individual A forms T by contributing $300 and T sustains a $100 net operating loss. During Year 2, T's assets decline in value by $100. At the beginning of Year 3, P acquires

all the stock of T from Individual A, and T becomes a member of the P group in a transaction that does not result in an ownership change under section 382(g). At the time of the acquisition, T has a $100 net unrealized built-in loss, which exceeds the threshold requirements of section 382(h)(3)(B). During Year 3, T recognizes its unrealized loss as a $100 ordinary loss. The members of the P group contribute the following to the consolidated taxable income of the P group for Years 3 and 4 (computed without regard to T's recognition of its unrealized loss and any CNOL deduction under this section):

	Year 3	Year 4	Total
P group (without T)	$100	$100	$200
T	60	40	100
CTI	160	140	300

(ii) Under §1.1502–15(a), T's $100 of ordinary loss in Year 3 constitutes a built-in loss that is subject to the SRLY limitation under paragraph (c) of this section. The amount of the limitation is determined by treating the deduction as a net operating loss carryover from a SRLY. The built-in loss is therefore subject to a $60 SRLY limitation for Year 3. The built-in loss is treated as a net operating loss carryover solely for purposes of determining the extent to which the loss is not allowed by reason of the SRLY limitation, and for all other purposes the loss remains a loss arising in Year 3. Consequently, under paragraph (b) of this section, the $60 allowed under the SRLY limitation is absorbed by the P group before T's $100 net operating loss carryover from Year 1 is allowed.

(iii) Under §1.1502–15(a), the $40 balance of the built-in loss that is not allowed in Year 3 because of the SRLY limitation is treated as a $40 net operating loss arising in Year 3 that is subject to the SRLY limitation because, under paragraph (c)(1)(ii) of this section, Year 3 is treated as a SRLY, and is carried to other years in accordance with the rules of paragraph (b) of this section. The SRLY limitation for Year 4 is the P group's consolidated taxable income for Year 3 and Year 4 determined by reference to only T's items and without regard to the group's CNOL deductions ($60 + $40), reduced by T's loss actually absorbed by the group in Year 3 ($60). The SRLY limitation for Year 4 is $40.

(iv) Under paragraph (c) of this section and the principles of section 172(b), $40 of T's $100 net operating loss carryover from Year 1 is included in the CNOL deduction under paragraph (a) of this section in Year 4.

Example 5. Dual SRLY registers and accounting for SRLY losses actually absorbed. (i) In Year 1, T sustains a $100 net operating loss and a $50 net capital loss. At the beginning of Year 2, T becomes a member of the P group in a transaction that does not result in an ownership change under section 382(g). Both of T's carryovers from Year 1 are subject to SRLY limits under this paragraph (c) and §1.1502–22(c). The members of the P group contribute the following to the consolidated taxable income for Years 2 and 3 (computed without regard to T's CNOL deduction under this section or net capital loss carryover under §1.1502–22):

	P	T
Year 1 (SRLY)		
Ordinary	.....	(100)
Capital	.....	(50)
Year 2		
Ordinary	30	60
Capital	0	(20)
Year 3		
Ordinary	10	40
Capital	0	30

(ii) For Year 2, the group computes separate SRLY limits for each of T's SRLY carryovers from Year 1. The group determines its ability to use its capital loss carryover before it determines its ability to use its ordinary loss carryover. Under section 1212, because the group has no Year 2 capital gain, it cannot absorb any capital losses in Year 2. T's Year 1 net capital loss and the group's Year 2 consolidated net capital loss (all of which is attributable to T) are carried over to Year 3.

(iii) Under this section, the aggregate amount of T's $100 net operating loss carryover from Year 1 that may be included in the CNOL deduction of the group for Year 2 may not exceed $60—the amount of the consolidated taxable income computed by reference only to T's items, including losses and deductions to the extent actually absorbed (i.e., $60 of T's ordinary income for Year 2). Thus, the group may include $60 of T's ordinary loss carryover from Year 1 in its Year 2 CNOL deduction. T carries over its remaining $40 of its Year 1 loss to Year 3.

(iv) For Year 3, the group again computes separate SRLY limits for each of T's SRLY carryovers from Year 1. The group has consolidated net capital gain (without taking into account a net capital loss carryover deduction) of $30. Under §1.1502–22(c), the aggregate amount of T's $50 capital loss carryover from Year 1 that may be included in computing the group's consolidated net capital gain for all years of the group (here Years 2 and 3) may not exceed $30 (the aggregate consolidated net capital gain computed by reference only to T's items, including losses and deductions actually absorbed (i.e., $30 of capital gain in Year 3)). Thus, the group may include $30 of T's Year 1 capital loss carryover in its computation of consolidated net capital gain for Year 3, which offsets the group's capital gains for Year 3. T carries over its remaining $20 of its Year 1 loss to Year 4. The group carries over the

Year 2 consolidated net capital loss to Year 4.

(v) Under this section, the aggregate amount of T's net operating loss carryover from Year 1 that may be included in the CNOL deduction of the group for Years 2 and 3 may not exceed $100, which is the amount of the aggregate consolidated taxable income for Years 2 and 3 determined by reference only to T's items, including losses and deductions actually absorbed (i.e., $60 of ordinary income in Year 2 plus $40 of ordinary income, $30 of capital gain, and $30 of SRLY capital losses actually absorbed in Year 3). The group included $60 of T's ordinary loss carryover in its Year 2 CNOL deduction. It may include the remaining $40 of the carryover in its Year 3 CNOL deduction.

(2) *SRLY subgroup limitation*. In the case of a net operating loss carryover or carryback for which there is a SRLY subgroup, the principles of paragraph (c)(1) of this section apply to the SRLY subgroup, and not separately to its members. Thus, the contribution to consolidated taxable income and the net operating loss carryovers and carrybacks arising (or treated as arising) in SRLYs that are included in the CNOL deductions for all consolidated return years of the group under paragraph (a) of this section are based on the aggregate amounts of income, gain, deduction, and loss of the members of the SRLY subgroup for the relevant consolidated return years (as provided in paragraph (c)(1)(i)(C) of this section). For an illustration of aggregate amounts during the relevant consolidated return years following the year in which a member of a SRLY subgroup ceases to be a member of the group, see paragraph (c)(2)(viii) *Example 4* of this section. A SRLY subgroup may exist only for a carryover or carryback arising in a year that is not a SRLY (and is not treated as a SRLY under paragraph (c)(1)(ii) of this section) with respect to another group (the former group), whether or not the group is a consolidated group, or for a carryover that was subject to the overlap rule described in paragraph (g) of this section or § 1.1502–15(g) with respect to another group (the former group). A separate SRLY subgroup is determined for each such carryover or carryback. A consolidated group may include more than one SRLY subgroup, and a member may be a member of more than one SRLY subgroup. Solely for purposes of determining the members of a SRLY subgroup with respect to a loss:

(i) *Carryovers*. In the case of a carryover, the SRLY subgroup is composed of the member carrying over the loss (the loss member) and each other member that was a member of the former group that becomes a member of the group at the same time as the loss member. A member remains a member of the SRLY subgroup until it ceases to be affiliated with the loss member. The aggregate determination described in paragraph (c)(1) of this section and this paragraph (c)(2) includes the amounts of income, gain, deduction, and loss of each member of the SRLY subgroup for the consolidated return years during which it remains a member of the SRLY subgroup. For an illustration of the aggregate determination of a SRLY subgroup, see paragraph (c)(2)(viii) *Example 2* of this section.

(ii) *Carrybacks*. In the case of a carryback, the SRLY subgroup is composed of the member carrying back the loss (the loss member) and each other member of the group from which the loss is carried back that has been continuously affiliated with the loss member from the year to which the loss is carried through the year in which the loss arises.

(iii) *Built-in losses*. In the case of a built-in loss, the SRLY subgroup is composed of the member recognizing the loss (the loss member) and each other member that was part of the subgroup with respect to the loss determined under § 1.1502–15(c)(2) immediately before the members became members of the group. The principles of paragraphs (c)(2)(i) and (ii) of this section apply to determine the SRLY subgroup for the built-in loss that is, under paragraph (c)(1)(ii) of this section, treated as arising in a SRLY with respect to the group in which the loss is recognized. For this purpose and as the context requires, a reference in paragraphs (c)(2)(i) and (ii) of this section to a group or former group is a reference to the subgroup determined under § 1.1502–15(c)(2).

(iv) *Principal purpose of avoiding or increasing a SRLY limitation*. The members composing a SRLY subgroup are not treated as a SRLY subgroup if any of them is formed, acquired, or availed

of with a principal purpose of avoiding the application of, or increasing any limitation under, this paragraph (c). Any member excluded from a SRLY subgroup, if excluded with a principal purpose of so avoiding or increasing any SRLY limitation, is treated as included in the SRLY subgroup.

(v) *Coordination with other limitations.* This paragraph (c)(2) does not allow a net operating loss to offset income to the extent inconsistent with other limitations or restrictions on the use of losses, such as a limitation based on the nature or activities of members. For example, any dual consolidated loss may not reduce the taxable income to an extent greater than that allowed under section 1503(d) and §§ 1.1503(d)–1 through 1.1503(d)–8. See also § 1.1502–47(q) (relating to preemption of rules for life-nonlife groups).

(vi) *Anti-duplication.* If the same item of income or deduction could be taken into account more than once in determining a limitation under this paragraph (c), or in a manner inconsistent with any other provision of the Internal Revenue Code or regulations incorporating this paragraph (c), the item of income or deduction is taken into account only once and in such manner that losses are absorbed in accordance with the ordering rules in paragraph (b) of this section and the underlying purposes of this section.

(vii) *Corporations that leave a SRLY subgroup.* If a loss member ceases to be affiliated with a SRLY subgroup, the amount of the member's remaining SRLY loss from a specific year is determined pursuant to the principles of paragraphs (b)(2)(ii)(A) and (b)(2)(iv) of this section.

(viii) *Examples.* The principles of this paragraph (c)(2) are illustrated by the following examples:

Example 1. Members of SRLY subgroups. (i) Individual A owns all of the stock of P, S, T and M. P and M are each the common parent of a consolidated group. During Year 1, P sustains a $50 net operating loss. At the beginning of Year 2, P acquires all the stock of S at a time when the aggregate basis of S's assets exceeds their aggregate value by $70, and S becomes a member of the P group. At the beginning of Year 3, P acquires all the stock of T, T has a $60 net operating loss carryover at the time of the acquisition, and T becomes a member of the P group. During Year 4, S forms S1 and T forms T1, each by contributing assets with built-in gains which are, in the aggregate, material. S1 and T1 become members of the P group. During Year 7, M acquires all of the stock of P, and the members of the P group become members of the M group for the balance of Year 7. The $50 and $60 loss carryovers of P and T are carried to Year 7 of the M group, and the value and basis of S's assets did not change after it became a member of the former P group. None of the transactions described above resulted in an ownership change under section 382(g).

(ii) Under paragraph (c)(2) of this section, a separate SRLY subgroup is determined for each loss carryover and built-in loss. In the P group, P's $50 loss carryover is not treated as arising in a SRLY. See § 1.1502–1(f). Consequently, the carryover is not subject to limitation under paragraph (c) of this section in the P group.

(iii) In the M group, P's $50 loss carryover is treated as arising in a SRLY and is subject to the limitation under paragraph (c) of this section. A SRLY subgroup with respect to that loss is composed of members which were members of the P group, the group as to which the loss was not a SRLY. The SRLY subgroup is composed of P, the member carrying over the loss, and each other member of the P group that became a member of the M group at the same time as P. A member of the SRLY subgroup remains a member until it ceases to be affiliated with P. For Year 7, the SRLY subgroup is composed of P, S, T, S1, and T1.

(iv) In the P group, S's $70 unrealized loss, if recognized within the 5-year recognition period after S becomes a member of the P group, is subject to limitation under paragraph (c) of this section. See § 1.1502–15 and paragraph (c)(1)(ii) of this section. Because S was not continuously affiliated with P, T, or T1 for 60 consecutive months prior to joining the P group, these corporations cannot be included in a SRLY subgroup with respect to S's unrealized loss in the P group. See paragraph (c)(2)(iii) of this section. As a successor to S, S1 is included in a subgroup with S in the P group, and, because 100 percent of S1's stock is owned directly by corporations that were members of the SRLY subgroup when the members of the SRLY subgroup became members of the P group, its net positive income is not excluded from the consolidated taxable income of the P group that may be offset by the built-in loss. See paragraph (f) of this section.

(v) In the M group, S's $70 unrealized loss, if recognized within the 5-year recognition period after S becomes a member of the M group, is subject to limitation under paragraph (c) of this section. Prior to becoming a member of the M group, S had been continuously affiliated with P (but not T or T1) for 60 consecutive months, and S1 is a successor

that has remained continuously affiliated with S. Those members had a net unrealized built-in loss immediately before they became members of the group under §1.1502–15(c). Consequently, in Year 7, S, S1, and P compose a subgroup in the M group with respect to S's unrealized loss. Because S1 was a member of the SRLY subgroup when it became a member of the M group and also because 100 percent of S1's stock is owned directly by corporations that were members of the SRLY subgroup when the members of the SRLY subgroup became members of the M group, its net positive income is not excluded from the consolidated taxable income of the M group that may be offset by the recognized built-in loss. See paragraph (f) of this section.

(vi) In the P group, T's $60 loss carryover arose in a SRLY and is subject to limitation under paragraph (c) of this section. P, S, and S1 were not members of the group in which T's loss arose, and T's loss carryover was not subject to the overlap rule described in paragraph (g) of this section with respect to the P group (the former group). Thus, P, S, and S1 are not members of a SRLY subgroup with respect to the T carryover in the P group. See paragraph (c)(2)(i) of this section. As a successor to T, T1 is included in a SRLY subgroup with T in the P group, and, because 100 percent of T1's stock is owned directly by corporations that were members of the SRLY subgroup when the members of the SRLY subgroup became members of the P group, its net positive income is not excluded from the consolidated taxable income of the P group that may be offset by the carryover. See paragraph (f) of this section.

(vii) In the M group, T's $60 loss carryover arose in a SRLY and is subject to limitation under paragraph (c) of this section. T and T1 remain the only members of a SRLY subgroup with respect to the carryover. Because T1 was a member of the SRLY subgroup when it became a member of the M group and also because 100 percent of T1's stock is owned directly by corporations that were members of the SRLY subgroup when the members of the SRLY subgroup became members of the M group, its net positive income is not excluded from the consolidated taxable income of the M group that may be offset by the carryover. See paragraph (f) of this section.

Example 2. Computation of SRLY subgroup limitation. (i) Individual A owns all of the stock of S, T, P and M. P and M are each the common parent of a consolidated group. In Year 2, P acquires all the stock of S and T from Individual A, and S and T become members of the P group. For Year 3, the P group has a $45 CNOL, which is attributable to P, and which P carries forward. M is the common parent of another group. At the beginning of Year 4, M acquires all of the stock of P, and the former members of the P group become members of the M group. None of the transactions described above resulted in an ownership change under section 382(g).

(ii) P's year to which the loss is attributable, Year 3, is a SRLY with respect to the M group. See §1.1502–1(f)(1). However, P, S, and T compose a SRLY subgroup with respect to the Year 3 loss under paragraph (c)(2)(i) of this section because Year 3 is not a SRLY (and is not treated as a SRLY) with respect to the P group. P's loss is carried over to the M group's Year 4 and is therefore subject to the SRLY subgroup limitation in paragraph (c)(2) of this section.

(iii) In Year 4, the M group has $10 of consolidated taxable income (computed without regard to the CNOL deduction for Year 4). Such consolidated taxable income would be $45 if determined by reference to only the items of P, S, and T, the members included in the SRLY subgroup with respect to P's loss carryover. Therefore, the SRLY subgroup limitation under paragraph (c)(2) of this section for P's net operating loss carryover from Year 3 is $45. Because the M group has only $10 of consolidated taxable income in Year 4, however, only $10 of P's net operating loss carryover is included in the CNOL deduction under paragraph (a) of this section in Year 4.

(iv) In Year 5, the M group has $100 of consolidated taxable income (computed without regard to the CNOL deduction for Year 5). Neither P, S, nor T has any items of income, gain, deduction, or loss in Year 5. Although the members of the SRLY subgroup do not contribute to the $100 of consolidated taxable income in Year 5, the SRLY subgroup limitation for Year 5 is $35 (the sum of SRLY subgroup consolidated taxable income of $45 in Year 4 and $0 in Year 5, less the $10 net operating loss carryover actually absorbed by the M group in Year 4). Therefore, $35 of P's net operating loss carryover is included in the CNOL deduction under paragraph (a) of this section in Year 5.

Example 3. Inclusion in more than one SRLY subgroup. (i) Individual A owns all of the stock of S, T, P and M. S, P, and M are each the common parent of a consolidated group. At the beginning of Year 1, S acquires all the stock of T from Individual A, and T becomes a member of the S group. For Year 1, the S group has a CNOL of $10, all of which is attributable to S and is carried over to Year 2. At the beginning of Year 2, P acquires all the stock of S, and S and T become members of the P group. For Year 2, the P group has a CNOL of $35, all of which is attributable to P and is carried over to Year 3. At the beginning of Year 3, M acquires all of the stock of P, and the former members of the P group become members of the M group. None of the transactions described above resulted in an ownership change under section 382(g).

(ii) P's and S's net operating losses arising in SRLYs with respect to the M group are

subject to limitation under paragraph (c) of this section. P, S, and T compose a SRLY subgroup for purposes of determining the limitation for P's $35 net operating loss carryover arising in Year 2 because, under paragraph (c)(2)(i) of this section, Year 2 is not a SRLY with respect to the P group. Similarly, S and T compose a SRLY subgroup for purposes of determining the limitation for S's $10 net operating loss carryover arising in Year 1 because Year 1 is not a SRLY with respect to the S group.

(iii) S and T are members of both the SRLY subgroup with respect to P's losses and the SRLY subgroup with respect to S's losses. Under paragraph (c)(2) of this section, S's and T's items cannot be included in the determination of the SRLY subgroup limitation for both SRLY subgroups for the same consolidated return year; paragraph (c)(2)(vi) of this section requires the M group to consider the items of S and T only once so that the losses are absorbed in the order of the taxable years in which they were sustained. Because S's loss was incurred in Year 1, while P's loss was incurred in Year 2, the items will be added in the determination of the consolidated taxable income of the S and T SRLY subgroup to enable S's loss to be absorbed first. The taxable income of the P, S, and T SRLY subgroup is then computed by including the consolidated taxable income for the S and T SRLY subgroup less the amount of any net operating loss carryover of S that is absorbed after applying this section to the S subgroup for the year.

Example 4. Corporation ceases to be affiliated with a SRLY subgroup. (i) Individual A owns all of the stock of P, and M. P and S are members of the P group and the P group has a CNOL of $30 in Year 1, all of which is attributable to P and carried over to Year 2. At the beginning of Year 2, M acquires all of the stock of P, and P and S become members of the M group. P and S compose a SRLY subgroup with respect to P's net operating loss carryover. For Year 2, consolidated taxable income of the M group determined by reference to only the items of P (and without regard to the CNOL deduction for Year 2) is $40. However, such consolidated taxable income of the M group determined by reference to the items of both P and S is a loss of $20. Thus, the SRLY subgroup limitation under paragraph (c)(2) of this section prevents the M group from including any of P's net operating loss carryover in the CNOL deduction under paragraph (a) of this section in Year 2, and P carries the Year 1 loss to Year 3.

(ii) At the end of Year 2, P sells all of the S stock, and S ceases to be a member of the M group and the P subgroup. For Year 3, consolidated taxable income of the M group is $50 (determined without regard to the CNOL deduction for Year 3), and such consolidated taxable income would be $10 if determined by reference to only items of P. However, the limitation under paragraph (c) of this section for Year 3 for P's net operating loss carryover still prevents the M group from including any of P's loss in the CNOL deduction under paragraph (a) of this section. The limitation results from the inclusion of S's items for Year 2 in the determination of the SRLY subgroup limitation for Year 3 even though S ceased to be a member of the M group (and the P subgroup) at the end of Year 2. Thus, the M group's consolidated taxable income determined by reference to only the SRLY subgroup members' items for all consolidated return years of the group through Year 3 (determined without regard to the CNOL deduction) is not a positive amount.

(ix) *Application to other than loss carryovers.* Paragraph (g) of this section and the phrase ''or for a carryover that was subject to the overlap rule described in paragraph (g) of this section or § 1.1502–15(g) with respect to another group (the former group)'' in this paragraph (c)(2) apply only to carryovers of net operating losses, net capital losses, and for taxable years for which the due date (without extensions) of the consolidated return is after May 25, 2000, to carryovers of credits described in section 383(a)(2). Accordingly, as the context may require, if another regulation references this section and such other regulation does not concern a carryover of net operating losses, net capital losses, or for taxable years for which the due date (without extensions) of the consolidated return is after May 25, 2000, carryovers of credits described in section 383(a)(2), then such reference does not include a reference to such paragraph or phrase.

(d) *Coordination with consolidated return change of ownership limitation and transactions subject to old section 382*—(1) *Consolidated return changes of ownership.* If a consolidated return change of ownership occurred before January 1, 1997, the principles of § 1.1502–21A(d) apply to determine the amount of the aggregate of the net operating losses attributable to old members of the group that may be included in the consolidated net operating loss deduction under paragraph (a) of this section. For this purpose, § 1.1502–1(g) is applied by treating that date as the end of the year of change.

(2) *Old section 382.* The principles of § 1.1502–21A(e) apply to disallow or reduce the amount of a net operating loss

carryover of a member as a result of a transaction subject to old section 382.

(e) *Consolidated net operating loss.* Any excess of deductions over gross income, as determined under § 1.1502–11(a) (without regard to any consolidated net operating loss deduction), is also referred to as the consolidated net operating loss (or CNOL).

(f) *Predecessors and successors*—(1) *In general.* For purposes of this section, any reference to a corporation, member, common parent, or subsidiary, includes, as the context may require, a reference to a successor or predecessor, as defined in § 1.1502–1(f)(4).

(2) *Limitation on SRLY subgroups*—(i) *General rule.* Except as provided in paragraph (f)(2)(ii) of this section, if a successor's items of income and gain exceed the successor's items of deduction and loss (net positive income), then the net positive income attributable to the successor is excluded from the computation of the consolidated taxable income of a SRLY subgroup.

(ii) *Exceptions.* A successor's net positive income is not excluded from the consolidated taxable income of a SRLY subgroup if—

(A) The successor acquires substantially all the assets and liabilities of its predecessor, and the predecessor ceases to exist;

(B) The successor was a member of the SRLY subgroup when the SRLY subgroup members became members of the group;

(C) 100 percent of the stock of the successor is owned directly by corporations that were members of the SRLY subgroup when the SRLY subgroup members became members of the group; or

(D) The Commissioner so determines.

(g) *Overlap with section 382*—(1) *General rule.* The limitation provided in paragraph (c) of this section does not apply to net operating loss carryovers (other than a hypothetical carryover described in paragraph (c)(1)(i)(D) of this section and a carryover described in paragraph (c)(1)(ii) of this section) when the application of paragraph (c) of this section results in an overlap with the application of section 382. For a similar rule applying in the case of net operating loss carryovers described in paragraphs (c)(1)(i)(D) and (c)(1)(ii) of this section, see § 1.1502–15(g).

(2) *Definitions*—(i) *Generally.* For purposes of this paragraph (g), the definitions and nomenclature contained in section 382, the regulations thereunder, and §§ 1.1502–90 through 1.1502–99 apply.

(ii) *Overlap.* (A) An overlap of the application of paragraph (c) of this section and the application of section 382 with respect to a net operating loss carryover occurs if a corporation becomes a member of a consolidated group (the SRLY event) within six months of the change date of an ownership change giving rise to a section 382(a) limitation with respect to that carryover (the section 382 event).

(B) If an overlap described in paragraph (g)(2)(ii)(A) of this section occurs with respect to net operating loss carryovers of a corporation whose SRLY event occurs within the six month period beginning on the date of a section 382 event, then an overlap is treated as also occurring with respect to that corporation's net operating loss carryover that arises within the period beginning with the section 382 event and ending with the SRLY event.

(C) For special rules in the event that there is a SRLY subgroup and/or a loss subgroup as defined in § 1.1502–91(d)(1) with respect to a carryover, see paragraph (g)(4) of this section.

(3) *Operating rules*—(i) *Section 382 event before SRLY event.* If a SRLY event occurs on the same date as a section 382 event or within the six month period beginning on the date of the section 382 event, paragraph (g)(1) of this section applies beginning with the tax year that includes the SRLY event.

(ii) *SRLY event before section 382 event.* If a section 382 event occurs within the period beginning the day after the SRLY event and ending six months after the SRLY event, paragraph (g)(1) of this section applies starting with the first tax year that begins after the section 382 event.

(4) *Subgroup rules.* In general, in the case of a net operating loss carryover for which there is a SRLY subgroup and a loss subgroup (as defined in § 1.1502–91(d)(1)), the principles of this

paragraph (g) apply to the SRLY subgroup, and not separately to its members. However, paragraph (g)(1) of this section applies—

(i) With respect to a carryover described in paragraph (g)(2)(ii)(A) of this section only if—

(A) All members of the SRLY subgroup with respect to that carryover are also included in a loss subgroup with respect to that carryover; and

(B) All members of a loss subgroup with respect to that carryover are also members of a SRLY subgroup with respect to that carryover; and

(ii) With respect to a carryover described in paragraph (g)(2)(ii)(B) of this section only if all members of the SRLY subgroup for that carryover are also members of a SRLY subgroup that has net operating loss carryovers described in paragraph (g)(2)(ii)(A) of this section that are subject to the overlap rule of paragraph (g)(1) of this section.

(5) *Examples*. The principles of this paragraph (g) are illustrated by the following examples:

Example 1. Overlap—Simultaneous Acquisition. (i) Individual A owns all of the stock of P, which in turn owns all of the stock of S. P and S file a consolidated return. In Year 2, B, an individual unrelated to Individual A, forms T which incurs a $100 net operating loss for that year. At the beginning of Year 3, S acquires T.

(ii) S's acquisition of T results in T becoming a member of the P group (the SRLY event) and also results in an ownership change of T, within the meaning of section 382(g), that gives rise to a limitation under section 382(a) (the section 382 event) with respect to the T carryover.

(iii) Because the SRLY event and the change date of the section 382 event occur on the same date, there is an overlap of the application of the SRLY rules and the application of section 382.

(iv) Consequently, under this paragraph (g), in Year 3 the SRLY limitation does not apply to the Year 2 $100 net operating loss.

Example 2. Overlap—Section 382 event before SRLY event. (i) Individual A owns all of the stock of P, which in turn owns all of the stock of S. P and S file a consolidated return. In Year 1, B, an individual unrelated to Individual A, forms T which incurs a $100 net operating loss for that year. On February 28 of Year 2, S purchases 55% of T from Individual B. On June 30, of Year 2, S purchases an additional 35% of T from Individual B.

(ii) The February 28 purchase of 55% of T is a section 382 event because it results in an ownership change of T, under section 382(g), that gives rise to a section 382(a) limitation with respect to the T carryover. The June 30 purchase of 35% of T results in T becoming a member of the P group and is therefore a SRLY event.

(iii) Because the SRLY event occurred within six months of the change date of the section 382 event, there is an overlap of the application of the SRLY rules and the application of section 382.

(iv) Consequently, under paragraph (g) of this section, in Year 2 the SRLY limitation does not apply to the Year 1 $100 net operating loss.

Example 3. No overlap—Section 382 event before SRLY event. (i) The facts are the same as in *Example 2* except that Individual B does not sell the additional 35% of T to S until September 30, Year 2.

(ii) The February 28 purchase of 55% of T is a section 382 event because it results in an ownership change of T, under section 382(g), that gives rise to a section 382(a) limitation with respect to the T carryover. The September 30 purchase of 35% of T results in T becoming a member of the P group and is therefore a SRLY event.

(iii) Because the SRLY event did not occur within six months of the change date of the section 382 event, there is no overlap of the application of the SRLY rules and the application of section 382. Consequently, the Year 1 net operating loss is subject to a SRLY limitation and a section 382 limitation.

Example 4. Overlap—SRLY event before section 382 event. (i) P and S file a consolidated return. S has owned 40% of T for 6 years. For Year 6, T has a net operating loss of $500 that is carried forward. On March 31, Year 7, S acquires an additional 40% of T, and on August 31, Year 7, S acquires the remaining 20% of T.

(ii) The March 31 purchase of 40% of T results in T becoming a member of the P group and is therefore a SRLY event. The August 31 purchase of 20% of T is a section 382 event because it results in an ownership change of T, under section 382(g), that gives rise to a section 382(a) limitation with respect to the T carryover.

(iii) Because the SRLY event occurred within six months of the change date of the section 382 event, there is an overlap of the application of the SRLY rules and the application of section 382 within the meaning of this paragraph (g).

(iv) Under this paragraph (g), the SRLY rules of paragraph (c) of this section will apply to the Year 7 tax year. Beginning in Year 8 (the year after the section 382 event), any unabsorbed portion of the Year 6 net operating loss will not be subject to a SRLY limitation.

Example 5. Overlap—Coextensive subgroups. (i) Individual A owns all of the stock of S, which in turn owns all of the stock of T. S and T file a consolidated return beginning in

Year 1. B, an individual unrelated to Individual A, owns all of the stock of P, the common parent of a consolidated group. In Year 2, the S group has a $200 consolidated net operating loss which is carried forward, of which $100 is attributable to S, and $100 is attributable to T. At the beginning of Year 3, the P group acquires all of the stock of S from Individual A.

(ii) P's acquisition of S results in S and T becoming members of the P group (the SRLY event). With respect to the Year 2 net operating loss carryover, S and T compose a SRLY subgroup under paragraph (c)(2) of this section.

(iii) S and T also compose a loss subgroup under §1.1502–91(d)(1) with respect to the Year 2 net operating loss carryover. P's acquisition also results in an ownership change of S, the subgroup parent, within the meaning of section 382(g), that gives rise to a limitation under section 382(a) (the section 382 event) with respect to the Year 2 carryover.

(iv) Because the SRLY event and the change date of the section 382 event occur on the same date, there is an overlap of the application of the SRLY rules and the application of section 382 within the meaning of paragraph (g) of this section. Because the SRLY subgroup and the loss subgroup are coextensive, under paragraph (g) of this section, the SRLY limitation does not apply to the Year 2 $200 net operating loss.

Example 6. No overlap—Different subgroups. (i) Individual B owns all of the stock of P, the common parent of a consolidated group. P owns all of the stock of S and all of the stock of T. Individual A owns all of the stock of X, the common parent of another consolidated group. In Year 1, the P group has a $200 consolidated net operating loss, of which $100 is attributable to S and $100 is attributable to T. At the beginning of Year 3, the X group acquires all of the stock of S and T from P and does not make an election under §1.1502–91(d)(4) (concerning an election to treat the loss subgroup parent requirement as having been satisfied).

(ii) X's acquisition of S and T results in S and T becoming members of the X group (the SRLY event). With respect to the Year 1 net operating loss, S and T compose a SRLY subgroup under paragraph (c)(2) of this section.

(iii) S and T do not bear (and are not treated as bearing) a section 1504(a)(1) relationship. Therefore S and T do not qualify as a loss subgroup under §1.1502–91(d)(1). X's acquisition of S and T results in separate ownership changes of S and T, that give rise to separate limitations under section 382(a) (the section 382 events) with respect to each of S and T's Year 1 net operating loss carryovers. See §1.1502–94.

(iv) The SRLY event and the change dates of the section 382 events occur on the same date. However, paragraph (g)(1) of this section does not apply because the SRLY subgroup (composed of S and T) is not coextensive with a loss subgroup with respect to the Year 1 carryovers. Consequently, the Year 1 net operating loss is subject to both a SRLY subgroup limitation and also separate section 382 limitations for each of S and T.

Example 7. No overlap—Different subgroups. (i) Individual A owns all of the stock of T and all of the stock of S, the common parent of a consolidated group. B, an individual unrelated to Individual A, owns all of the stock of P, the common parent of another consolidated group. In Year 1, T has a net operating loss of $100 that is carried forward. At the end of Year 2, S acquires all of the stock of T from Individual A. In Year 3, the S group sustains a $200 consolidated net operating loss that is carried forward. In Year 8, the P group acquires all of the stock of S from Individual A.

(ii) S's acquisition of T in Year 1 results in T becoming a member of the S group. The acquisition, however, did not result in an ownership change under section 382(g). As a result, T's Year 1 net operating loss is subject to SRLY within the S group. At the end of Year 7, §1.1502–96(a) treats T's Year 1 net operating loss as not having arisen in a SRLY with respect to the S group. Section 1.1502–96(a), however, applies only for purposes of §§1.1502–91 through 1.1502–96 and §1.1502–98 but not for purposes of this section. See §1.1502–96(a)(5).

(iii) P's acquisition of S in Year 8 results in S and T becoming members of the P group (the SRLY event). With respect to the Year 1 net operating loss, S and T do not compose a SRLY subgroup under paragraph (c)(2) of this section.

(iv) S and T compose a loss subgroup under §1.1502–91(d)(1) with respect to the Year 1 net operating loss carryover. P's acquisition of S results in an ownership change of the loss subgroup, within the meaning of section 382(g), that gives rise to a subgroup limitation under section 382(a) (the section 382 event) with respect to that carryover.

(v) The SRLY event and the change date of the section 382 event occur on the same date. However, under paragraph (g)(4) of this section, because the SRLY subgroup and the loss subgroup are not coextensive, T's Year 1 net operating loss carryover is subject to a SRLY limitation.

(vi) With respect to the Year 3 net operating loss carryover, S and T compose both a SRLY subgroup and a loss subgroup under §1.1502–91(d)(1). Thus, paragraph (g)(1) of this section applies, and the S group's Year 3 net operating loss carryover is not subject to a SRLY limitation.

Example 8. SRLY after overlap. (i) Individual A owns all of the stock of R and M, each the common parent of a consolidated group. B, an individual unrelated to Individual A, owns all of the stock of D. In Year 1, D incurs a $100 net operating loss that is carried

forward. At the beginning of Year 3, R acquires all of the stock of D. In Year 5, M acquires all of the stock of R in a transaction that did not result in an ownership change of R.

(ii) R's Year 3 acquisition of D results in D becoming a member of the R group (the SRLY event) and also results in an ownership change of D, that gives rise to a limitation under section 382(a) (the section 382 event) with respect to D's net operating loss carryover.

(iii) Because the SRLY event and the change date of the section 382 event occur on the same date, there is an overlap of the application of paragraph (c) of this section and section 382 with respect to D's net operating loss. Consequently, under this paragraph (g), D's Year 1 $100 net operating loss is not subject to a SRLY limitation in the R group.

(iv) M's Year 5 acquisition of R results in R and D becoming members of the M group (the SRLY event), but does not result in an ownership change of R or D that gives rise to a limitation under section 382(a). Because there is no section 382 event, the application of the SRLY rules and section 382 do not overlap. Consequently, D's Year 1 $100 net operating loss is subject to a SRLY limitation in the M group.

(v) Because D's Year 1 net operating loss carryover was subject to the overlap rule of paragraph (g) of this section when it joined the R group, under §1.1502–21(c)(2), the SRLY subgroup with respect to that carryover includes all of the members of the R group that joined the M group at the same time as D.

Example 9. Overlap—Interim losses. (i) Individual A owns all of the stock of P and S, each the common parent of a consolidated group. S owns all of the stock of T, its only subsidiary. B, an individual unrelated to Individual A, owns all of the stock of M, the common parent of a consolidated group. In Year 1, the S group has a $100 consolidated net operating loss. On January 1 of Year 2, P acquires all of the stock of S from Individual A. On December 31 of Year 2, M acquires 51% of the stock of P from Individual A. On May 31 of Year 3, M acquires the remaining 49% of the stock of P from Individual A. The P group, for the Year 3 period prior to June 1, had a $50 consolidated net operating loss, and under paragraph (b)(2)(iv) of this section, the loss is attributable entirely to S. Other than the losses described above, the P group does not have any other consolidated net operating losses.

(ii) In the P group, S's $100 loss carryover is treated as arising in a SRLY and is subject to the limitation under paragraph (c) of this section. A SRLY subgroup with respect to that loss is composed of S and T, the members which were members of the S group as to which the loss was not a SRLY.

(iii) M's December 31 purchase of 51% of P is a section 382 event because it results in an ownership change of the S loss subgroup that gives rise to a section 382(a) limitation (the section 382 event) with respect to the Year 1 net operating loss carryover. The purchase, however, does not result in an ownership change of P because it is not a loss corporation under section 382(k)(1). M's May 31 purchase of 49% of P results in P, S, and T becoming members of the M group and is therefore a SRLY event.

(iv) With respect to the Year 1 net operating loss, S and T compose a SRLY subgroup under paragraph (c)(2) of this section and a loss subgroup under §1.1502–91(d)(1). The loss subgroup does not include P because the only loss at the time of the section 382 event was subject to SRLY with respect to the P group. See §1.1502–91(d)(1).

(v) Because the SRLY event occured within six months of the change date of the section 382 event and the SRLY subgroup and loss subgroup are coextensive with respect to the Year 1 net operating loss carryover, there is an overlap of the application of the SRLY rules and the application of section 382 within the meaning of paragraph (g) of this section. Thus, the SRLY limitation does not apply to that carryover.

(vi) The Year 3 net operating loss, which arose between the section 382 event and the SRLY event, is a net operating loss described in paragraph (g)(2)(ii)(B) of this section because it is the net operating loss of a corporation whose SRLY event occurs within the six month period beginning on the date of a section 382 event.

(vii) With respect to the Year 3 net operating loss, P, S, and T compose a SRLY subgroup under paragraph (c)(2) of this section. Because P, a member of the SRLY subgroup for the Year 3 carryover, is not also a member of a SRLY subgroup that has net operating loss carryovers described in paragraph (g)(2)(ii)(A) of this section (the Year 1 net operating loss), the Year 3 carryover is subject to a SRLY limitation in the M group. See paragraph (g)(4)(ii) of this section.

(h) *Effective/applicability date*—(1) *In general.* This section generally applies to taxable years for which the due date (without extensions) of the consolidated return is after June 25, 1999. However—

(i) In the event that paragraph (g)(1) of this section does not apply to a particular net operating loss carryover in the current group, then solely for purposes of applying paragraph (c) of this section to determine a limitation with respect to that carryover and with respect to which the SRLY register (consolidated taxable income determined

by reference to only the member's or subgroup's items of income, gain, deduction, or loss) began in a taxable year for which the due date of the return was on or before June 25, 1999, paragraph (c)(2) of this section shall be applied without regard to the phrase ''or for a carryover that was subject to the overlap rule described in paragraph (g) of this section or §1.1502–15(g) with respect to another group (the former group)''; and

(ii) For purposes of paragraph (g) of this section, only an ownership change to which section 382(a), as amended by the Tax Reform Act of 1986, applies shall constitute a section 382 event.

(iii) Paragraphs (b)(2)(ii)(A) and (b)(2)(iv)(B)(*2*) of this section apply to taxable years for which the due date of the original return (without regard to extensions) is on or after September 17, 2008.

(2) *SRLY limitation*. Except in the case of those members (including members of a SRLY subgroup) described in paragraph (h)(3) of this section, a group does not take into account a consolidated taxable year beginning before January 1, 1997, in determining the aggregate of the consolidated taxable income under paragraph (c)(1) of this section (including for purposes of §1.1502–15 and §1.1502–22(c)) for the members (or SRLY subgroups).

(3) *Prior retroactive election*. A consolidated group that applied the rules of §1.1502–21T(g)(3) in effect prior to June 25, 1999, as contained in 26 CFR part 1 revised April 1, 1999, to all consolidated return years ending on or after January 29, 1991, and beginning before January 1, 1997, does not take into account a consolidated taxable year beginning before January 29, 1991, in determining the aggregate of the consolidated taxable income under paragraph (c)(1) of this section (including for purposes of §1.1502–15 and §1.1502–22(c)) for the members (or SRLY subgroups).

(4) *Offspring rule*. Paragraph (b)(2)(ii)(B) of this section applies to net operating losses arising in taxable years ending on or after June 25, 1999.

(5) *Waiver of carrybacks*. Paragraph (b)(3)(ii)(B) of this section (relating to the waiver of carrybacks for acquired members) applies to acquisitions occurring after June 25, 1999.

(6) *Certain prior periods*. Paragraphs (b)(1), (b)(2)(iv)(A), (b)(2)(iv)(B)(*1*), and (c)(2)(vii) of this section apply to taxable years for which the due date of the original return (without regard to extensions) is after March 21, 2005. Paragraphs (b)(2)(ii)(A) and (b)(2)(iv)(B)(*2*) (as contained in 26 CFR part 1 revised as of April 1, 2008) apply to taxable years for which the due date of the original return (without regard to extensions) is on or after March 21, 2005, and before September 17, 2008. Paragraph (b)(2)(ii)(A) of this section and §1.1502–21T(b)(1), (b)(2)(iv), and (c)(2)(vii), as contained in 26 CFR part 1 revised as of April 1, 2004, apply to taxable years for which the due date of the original return (without regard to extensions) is after August 29, 2003, and on or before March 21, 2005. For taxable years for which the due date of the original return (without regard to extensions) is on or before August 29, 2003, see paragraphs (b)(1), (b)(2)(ii)(A), (b)(2)(iv), and (c)(2)(vii) of this section and §1.1502–21T(b)(1) as contained in 26 CFR part 1 revised as of April 1, 2003.

(7) *Prior periods*. For certain taxable years ending on or before June 25, 1999, see §1.1502–21T in effect prior to June 25, 1999, as contained in 26 CFR part 1 revised April 1, 1999, as applicable.

(8) *Losses treated as expired under §1.1502–35(f)(1)*. For rules regarding losses treated as expired under §1.1502–35(f) on or after March 10, 2006, see §1.1502–21(b)(3)(v) as contained in 26 CFR part 1 in effect on April 1, 2006. For rules regarding losses treated as expired before March 10, 2006, see §1.1502–21T(h)(8) as contained in 26 CFR part 1 in effect on January 1, 2006.

(9) [Reserved] For further guidance, *see* §1.1502–21T(h)(9).

[T.D. 8823, 64 FR 36105, July 2, 1999]

EDITORIAL NOTE: For FEDERAL REGISTER citations affecting §1.1502–21, see the List of CFR Sections Affected, which appears in the Finding Aids section of the printed volume and at *www.fdsys.gov*.

§1.1502–21T Net operating losses (temporary).

(a) through (b)(3)(ii)(B) [Reserved] For further guidance, *see* §1.1502–21(a) through (b)(3)(ii)(B).

(C) *Partial waiver of carryback period for an applicable consolidated net operating loss—(1) Application.* The acquiring group may make an election described in paragraph (b)(3)(ii)(C)(*2*) or (b)(3)(ii)(C)(*3*) of this section with respect to an acquired member or members only if it did not file a valid election described in §1.1502–21(b)(3)(ii)(B) with respect to such acquired member or members on or before *June 23, 2010.*

(*2*) *Partial waiver of entire pre-acquisition carryback period.* If one or more members of a consolidated group become members of another consolidated group, then, with respect to the consolidated net operating loss arising in a taxable year ending after December 31, 2007, and beginning before January 1, 2010 (Applicable CNOL) for which the group has made an election pursuant to section 172(b)(1)(H), the acquiring group may make an irrevocable election to relinquish, for the part of the Applicable CNOL attributable to such member, the portion of the carryback period during which the corporation was a member of another group. This election could thus operate to relinquish carryback for up to five taxable years, including the Extended Carryback Period (as defined in paragraph (b)(3)(v) of this section). However, any other corporation joining the acquiring group that was affiliated with the member immediately before it joined the acquiring group must also be included in the waiver, and the conditions of this paragraph (b)(3)(ii)(C)(*2*) must be satisfied. The acquiring group cannot make the election described in this paragraph (b)(3)(ii)(C)(*2*) with respect to any particular portion of an Applicable CNOL if any carryback is claimed, as provided in paragraph (b)(3)(ii)(C)(*4*) of this section, with respect to any such loss on a return or other filing by a group of which the acquired member was previously a member and such claim is filed on or before the date the election described in this paragraph (b)(3)(ii)(C)(*2*) is filed. The election must be made in a separate statement entitled ''THIS IS AN ELECTION PURSUANT TO §1.1502–21T(b)(3)(ii)(C)(*2*) TO WAIVE THE PRE-[insert the first day of the first taxable year for which the member (or members) was a member of the acquiring group] CARRYBACK PERIOD FOR THE CNOL ATTRIBUTABLE TO THE [insert taxable year of loss] TAXABLE YEAR OF [insert names and employer identification numbers of members].'' Such statement must be filed as provided in paragraph (b)(3)(ii)(C)(*5*) of this section.

(*3*) *Partial waiver of pre-acquisition Extended Carryback Period.* If one or more members of a consolidated group become members of another consolidated group, then, with respect to the Applicable CNOL for which the acquiring group has made an election pursuant to section 172(b)(1)(H), the acquiring group may make an irrevocable election to relinquish, for the part of the Applicable CNOL attributable to such member, the portion of the Extended Carryback Period (as defined in paragraph (b)(3)(v) of this section) during which the corporation was a member of another group. This election could thus operate to relinquish carryback for up to three taxable years. However, any other corporation joining the acquiring group that was affiliated with the member immediately before it joined the acquiring group must also be included in the waiver, and the conditions of this paragraph (b)(3)(ii)(C)(*3*) must be satisfied. The acquiring group cannot make the election described in this paragraph (b)(3)(ii)(C)(*3*) with respect to any particular portion of an Applicable CNOL if a carryback to one or more taxable years that are prior to the taxable year that is two taxable years preceding the taxable year of the Applicable CNOL is claimed, as provided in paragraph (b)(3)(ii)(C)(*4*) of this section, with respect to any such loss on a return or other filing by a group of which the acquired member was previously a member, and such claim is filed on or before the date the election described in this paragraph (b)(3)(ii)(C)(*3*) is filed. The election must be made in a separate statement entitled ''THIS IS AN ELECTION PURSUANT TO §1.1502–21T(b)(3)(ii)(C)(*3*) TO WAIVE THE PRE-[insert the first day of the first taxable year for which the member (or members) was a member of the acquiring group] EXTENDED CARRYBACK PERIOD FOR THE CNOL ATTRIBUTABLE TO THE [insert taxable year of losses] TAXABLE YEAR

OF [insert names and employer identification numbers of members].'' Such statement must be filed as provided in paragraph (b)(3)(ii)(C)(*5*) of this section.

(*4*) *Claim for a carryback*. For purposes of paragraphs (b)(3)(ii)(C)(*2*) and (b)(3)(ii)(C)(*3*) of this section, a carryback is claimed with respect to a net operating loss if there is a claim for refund, an amended return, an application for a tentative carryback adjustment, or any other filing that claims the benefit of the NOL or CNOL in a taxable year prior to the taxable year of the loss, whether or not subsequently revoked in favor of a claim based on an Extended Carryback Period provided under section 172(b)(1)(H).

(*5*) *Time and manner for filing statement*. A statement described in paragraph (b)(3)(ii)(C)(*2*) or (b)(3)(ii)(C)(*3*) of this section that relates to an Applicable CNOL shall be made by the due date (including extension of time) for filing the return for the taxpayer's last taxable year beginning in 2009.

(*6*) *Example*. (i) *Waiver in case of preconsolidation separate return years*. T was a separate corporation that was not part of a consolidated group, until December 31, 2004, when it was acquired by the X Group. On December 31, 2007, the X Group sold all of the stock of T to the P Group. P did not make the election described in §1.1502–21(b)(3)(ii)(B) to relinquish, with respect to all CNOLs attributable to T, the portion of the carryback period for which T was a member of the X Group. In 2008, the P Group sustained a $1,000 CNOL, $600 of which was attributable to T under §1.1502–21(b)(2)(iv)(A). P elected a Five-Year Carryback (as defined in paragraph (b)(3)(v) of this section) pursuant to section 172(b)(1)(H) with regard to the P Group's 2008 CNOL, and the P Group elected, pursuant to paragraph (b)(3)(ii)(C)(*2*) of this section, to waive the portion of the carryback period during which T was included in any other consolidated group. T's fifth and fourth taxable years preceding the year of the loss were its 2003 and 2004 separate return years. Due to the P Group's election pursuant to paragraph (b)(3)(ii)(C)(*2*) of this section, T's allocable portion of the P Group's 2008 CNOL will not be carried back to the years for which it was a member of the X Group. However, T's allocable portion of the P Group's 2008 CNOL will be carried back to T's non-consolidated taxable years (2003 and 2004), subject to the limitation provided in section 172(b)(1)(H)(iv).

(ii) *Split-waiver election made*. The facts are the same as in paragraph (i) except that the group made the election described in §1.1502–21(b)(3)(ii)(B) with regard to its acquisition of T in 2007. Due to the P Group's election pursuant to §1.1502–21(b)(3)(ii)(B), T's allocable portion of the P Group's 2008 CNOL will not be carried back to the years for which T was a member of the X Group. However, T's allocable portion of the P Group's 2008 CNOL will be carried back to T's non-consolidated taxable years (2003 and 2004), subject to the limitation provided in section 172(b)(1)(H)(iv).

(b)(3)(iii)–(b)(3)(iv) [Reserved] For further guidance, *see* §1.1502–21(b)(3)(iii) and (b)(3)(iv).

(v) *Extended Carryback Period under section 172(b)(1)(H)*. Section 172(b)(1)(H) allows a taxpayer to elect to carry back a single net operating loss arising in a taxable year ending after December 31, 2007, and beginning before January 1, 2010 (Applicable NOL) to its third, fourth, or fifth taxable year preceding the taxable year of the loss (Extended Carryback Period). As contemplated by section 172(b)(1)(H), the designated taxable year within the Extended Carryback Period may be the fifth taxable year preceding the year of the loss (Five-Year Carryback), and section 172(b)(1)(H)(iv) limits the amount of the Applicable NOL that may be carried back to 50 percent of the taxpayer's taxable income (computed without regard to any NOL deduction attributable to the loss year or any taxable year thereafter) for such fifth preceding taxable year. This paragraph (b)(3)(v) provides rules for computing the 50 percent limitation under section 172(b)(1)(H)(iv) where a Five-Year Carryback is made to a consolidated return year from any consolidated return year or separate return year.

(A) *Election—(1) In general*. Except as otherwise provided in this section, a consolidated group may elect an Extended Carryback Period pursuant to

section 172(b)(1)(H) with regard to a consolidated net operating loss arising in a taxable year ending after December 31, 2007 and beginning before January 1, 2010 (Applicable CNOL). However, no election may be made under this paragraph for a taxpayer described in section 13(f) of the Worker, Homeownership, and Business Assistance Act of 2009, Public Law 111–92, 123 Stat. 2984 (November 6, 2009). The election pursuant to section 172(b)(1)(H) applies to the entire Applicable CNOL, except as otherwise provided in paragraph (b)(3)(ii)(C) of this section or in this paragraph (b)(3)(v). *See* also paragraph (c) of this section (SRLY limitation).

(*2*) *Revoking a previous carryback waiver*. A consolidated group may revoke a prior election pursuant to §1.1502–21(b)(3)(i) to relinquish the entire carryback period with respect to an Applicable CNOL, but only if the group makes the election pursuant to section 172(b)(1)(H) with regard to such Applicable CNOL.

(*3*) *Pre-acquisition electing member*. If a member (Electing Member) of a consolidated group makes an Extended Carryback Period election pursuant to section 172(b)(1)(H) with regard to a loss from a separate return year ending before the Electing Member's inclusion in a consolidated group, the election will not disqualify the acquiring group from making an otherwise available election pursuant to section 172(b)(1)(H) with regard to an Applicable CNOL incurred in a consolidated return year that includes the Electing Member.

(B) *Taxpayer's taxable income*. For purposes of computing the limitation under section 172(b)(1)(H)(iv) on a Five-Year Carryback to any consolidated return year from any consolidated return year or separate return year, *taxpayer's taxable income* as used in section 172(b)(1)(H)(iv)(I) means consolidated taxable income (CTI) in the consolidated return year that is the fifth taxable year preceding the year of the loss. For purposes of the preceding sentence, CTI is computed without regard to any CNOL deduction attributable to the particular Five-Year Carryback or any NOL from any member's taxable year ending on the same date as the taxable year in which the Five-Year Carryback arises, or any taxable year thereafter.

(C) *Limitation on Five-Year Carrybacks to a consolidated group*—(*1*) *Annual limitation*. The aggregate amount of Five-Year Carrybacks from years ending on the same date (Testing Date) to any consolidated return year may not exceed the excess of 50 percent of the CTI for that year over the total of Five-Year Carrybacks to that consolidated return year from years ending before the Testing Date (Annual Limitation). For purposes of the preceding sentence, CTI is computed without regard to—

(*i*) Any CNOL deduction attributable to Five-Year Carrybacks to such year; or

(*ii*) Any NOL from any member's taxable year ending on the Testing Date or any taxable year thereafter.

(*2*) *Pro rata absorption of limited and non-limited losses*. Any Five-Year Carryback, and other net operating losses, from years ending on the same date that are available to offset CTI in the same year are absorbed on a pro rata basis. *See* §1.1502–21(b)(1).

(D) *Election by small business*. This paragraph (b)(3)(v) does not apply to any loss of an eligible small business as defined in section 172(b)(1)(H)(v)(II) with respect to any election made pursuant to section 172(b)(1)(H) as in effect on the day before the date of the enactment of the Worker, Homeownership, and Business Assistance Act of 2009.

(E) *Examples*. The rules of this paragraph (b)(3)(v) are illustrated by the following examples. For purposes of the examples, all affiliated groups file consolidated returns, all corporations are includible corporations that have calendar taxable years, the facts set forth the only relevant corporate activity, and all transactions are with unrelated parties.

Example 1. Computation and Absorption of Five-Year Carrybacks. (i) *Facts*. P is the common parent of the P Group. On June 30, 2006, P acquired all of the stock of T from X, the common parent of the X Group. The X Group has been in existence since 1996. P did not make the election described in §1.1502–21(b)(3)(ii)(B) to relinquish, with respect to all CNOLs attributable to T, the portion of the carryback period for which T was a member of the X Group. In 2008, the P Group sustained a $1,000 CNOL, $600 of which was attributable to T under §1.1502–21(b)(2)(iv)(A).

P elected a Five-Year Carryback pursuant to section 172(b)(1)(H) with regard to the P Group's 2008 CNOL. P did not make an election pursuant to paragraph (b)(3)(ii)(C) of this section to waive any portion of the period during which T was included in the X Group. T's fifth taxable year preceding the year of the loss was the X Group's 2004 consolidated return year. For 2004, T's separate return limitation year (SRLY) limitation for losses carried into the X Group was $400. The X Group's CTI for 2004 is $200. The X Group did not make a Five-Year Carryback election for a CNOL from its 2008 or 2009 taxable year. There are no other NOL carrybacks into the X Group's 2004 consolidated taxable year.

(ii) *Five-Year Carryback from separate return year*. Pursuant to paragraph (b)(3)(v)(C)(*1*) of this section, the amount of T's apportioned loss that is eligible for Five-Year Carryback is limited to 50 percent of the X Group's CTI for 2004, or $100 ($200 × 50 percent). Therefore, $100 of T's apportioned loss will be carried into the X Group's 2004 consolidated return year. In addition, T's 2008 loss is subject to the SRLY limitation of $400 with respect to the X Group. Thus, the amount of T's portion of the P Group's 2008 CNOL that may offset the X Group's 2004 CTI is $100 (the lesser of $400 (T's SRLY limitation) or $100 (the amount of T's Five-Year Carryback)).

(iii) *Pro rata absorption of limited and nonlimited losses within a single consolidated return year*. The facts are the same as in paragraph (i), except that the X Group sustained a $750 CNOL in 2008, which X elected to carry back four years to its 2004 consolidated return year (no Five-Year Carryback). Further, the X Group had CTI of $500 in 2004. Therefore, the X Group and the P Group both carry back CNOLs from years ending December 31, 2008, although only the P Group's CNOL (including the portion allocable to T) constitutes a Five-Year Carryback. The Annual Limitation on Five-Year Carrybacks will be $250 ($500 × 50 percent), with CTI determined without taking into account the portion of P's 2008 CNOL carried back to the X Group's 2004 consolidated return year or the X Group's 2008 CNOL, which arises from a taxable year ending on the same date as the Five-Year Carryback. The $750 CNOL carryback within the X Group is subject to no limitation. Under §1.1502–21(b)(1), because the 2008 CNOL of the X Group and the 2008 SRLY loss of T are losses from years ending on the same date and are available to offset CTI in the same year, the two losses offset the X Group's $500 CTI on a pro rata basis. Accordingly, $375 of the X's Group's 2008 CNOL [$500 × $750/($750 + $250)] and $125 of T's portion of the P Group's 2008 CNOL [$500 × $250/($750 + $250)] offset the X Group's 2004 CTI.

Example 2. Multiple carryback years. (i) *Facts*. On January 1, 2004, Individual A formed X, which formed corporations S and T, and X elected to file a consolidated Federal income tax return. For its 2004 consolidated taxable year, the X Group's CTI was $1,100. For its 2005 consolidated taxable year, the X Group's CTI was $1,000. On June 30, 2007, the X Group sold all of the S stock to the Y Group and sold all of the T stock to the Z Group. The X Group terminated in 2007. Neither Y nor Z made the election described in §1.1502–21(b)(3)(ii)(B) to relinquish, with respect to all CNOLs attributable to S and T, respectively, the portion of the carryback period for which S and T were members of the X Group. In 2008, the Y Group sustained an $800 CNOL, $400 of which was attributable to S under §1.1502–21(b)(2)(iv)(A). Y elected a Five-Year Carryback with regard to the Y Group's 2008 CNOL pursuant to section 172(b)(1)(H). Y did not make an election pursuant to paragraph (b)(3)(ii)(C) of this section to waive any portion of the period during which S was included in the X Group. In 2009, the Z Group sustained a $1,000 CNOL, $600 of which was attributable to T under §1.1502–21(b)(2)(iv)(A). Z elected a Five-Year Carryback with regard to the Z Group's 2009 CNOL pursuant to section 172(b)(1)(H). Z did not make an election pursuant to paragraph (b)(3)(ii)(C) of this section to waive any portion of the Extended Carryback Period during which T was included in the X Group.

(ii) *Analysis*. The $400 of Y Group's 2008 CNOL that is apportioned to S is carried back as a separate return year Five-Year Carryback to the X Group's 2004 consolidated return year. The $600 of Z Group's 2009 CNOL that is apportioned to T is also a separate return year Five-Year Carryback to the X Group's 2005 consolidated return year. The Annual Limitation on Five-Year Carryback to the X Group's 2004 consolidated return year computed under paragraph (b)(3)(v)(C)(*1*) of this section equals $550 ($1,100 of CTI × 50 percent). Because S is making the sole Five-Year Carryback to the X Group's 2004 consolidated return year, S will make a Five-Year Carryback of the full $400. Similarly, the Annual Limitation for Five-Year Carryback to the X Group's 2005 consolidated return year computed under paragraph (b)(3)(v)(C)(*1*) of this section equals $500 ($1,000 of CTI × 50 percent). Because T is making the sole Five-Year Carryback to the X Group's 2005 consolidated return year, T will make a Five-Year Carryback of the full $500. The SRLY limitations for S and T, respectively, may limit the absorption of the Five-Year Carrybacks within the X Group.

Example 3. Pre-acquisition election by T. P is the common parent of the P Group. On December 31, 2008, P acquired all of the stock of T from X, the common parent of the X Group. T had been a member of the X Group since 1999. P did not make the election described in §1.1502–21(b)(3)(ii)(B) to relinquish,

with respect to all CNOLs attributable to T, the portion of the carryback period for which T was a member of the X Group. Pursuant to section 172(b)(1)(H), the X Group elected to make a Five-Year Carryback of its 2008 CNOL back to 2003. A portion of this CNOL is attributable to T pursuant to §1.1502–21(b)(2)(iv)(A). In 2009, the P Group incurred a CNOL of $1,000, $600 of which is attributable to T pursuant to §1.1502–21(b)(2)(iv)(A). Pursuant to section 172(b)(1)(H), the P Group elected a Five-Year Carryback with regard to its 2009 CNOL. P did not make the election pursuant to paragraph (b)(3)(ii)(C) of this section to waive any portion of the period during which T was included in the X Group. The Five-Year Carryback election by the X Group with respect to its 2008 CNOL (which includes the portion of the CNOL attributable to T) does not disqualify the P Group from electing a Five-Year Carryback with regard to its 2009 CNOL. Therefore, the P Group may carry back its CNOL, including the portion attributable to T, in accordance with §1.1502–21 and the rules of this section.

(c)–(h)(8) [Reserved] For further guidance, *see* §1.1502–21(c) through (h)(8).

(9) *Section 172(b)(1)(H)*—(i) *Applicability date*. This section applies to any consolidated Federal income tax return due (without extensions) after *June 23, 2010*, if such return was not filed on or before such date. However, a consolidated group may apply this section to any consolidated Federal income tax return that is not described in the preceding sentence.

(ii) *Expiration date*. The applicability of this section will expire on June 21, 2013.

[T.D. 9490, 75 FR 35645, June 23, 2010, as amended at 75 FR 44901, July 30, 2010]

§1.1502–22 Consolidated capital gain and loss.

(a) *Capital gain*. The determinations under section 1222, including capital gain net income, net long-term capital gain, and net capital gain, with respect to members during consolidated return years are not made separately. Instead, consolidated amounts are determined for the group as a whole. The consolidated capital gain net income for any consolidated return year is determined by reference to—

(1) The aggregate gains and losses of members from sales or exchanges of capital assets for the year (other than gains and losses to which section 1231 applies);

(2) The consolidated net section 1231 gain for the year (determined under §1.1502–23); and

(3) The net capital loss carryovers or carrybacks to the year.

(b) *Net capital loss carryovers and carrybacks*—(1) *In general*. The determinations under section 1222, including net capital loss and net short-term capital loss, with respect to members during consolidated return years are not made separately. Instead, consolidated amounts are determined for the group as a whole. Losses included in the consolidated net capital loss may be carried to consolidated return years, and, after apportionment, may be carried to separate return years. The net capital loss carryovers and carrybacks consist of—

(i) Any consolidated net capital losses of the group; and

(ii) Any net capital losses of the members arising in separate return years.

(2) *Carryovers and carrybacks generally*. The net capital loss carryovers and carrybacks to a taxable year are determined under the principles of section 1212 and this section. Thus, losses permitted to be absorbed in a consolidated return year generally are absorbed in the order of the taxable years in which they were sustained, and losses carried from taxable years ending on the same date, and which are available to offset consolidated capital gain net income, generally are absorbed on a pro rata basis. Additional rules provided under the Internal Revenue Code or regulations also apply, as well as the SRLY limitation under paragraph (c) of this section. See, e.g., section 382(l)(2)(B).

(3) *Carryovers and carrybacks of consolidated net capital losses to separate return years*. If any consolidated net capital loss that is attributable to a member may be carried to a separate return year under the principles of §1.1502–21(b)(2), the amount of the consolidated net capital loss that is attributable to the member is apportioned and carried to the separate return year (apportioned loss).

(4) *Special rules*—(i) *Short years in connection with transactions to which section*

381(a) applies. If a member distributes or transfers assets to a corporation that is a member immediately after the distribution or transfer in a transaction to which section 381(a) applies, the transaction does not cause the distributor or transferor to have a short year within the consolidated return year of the group in which the transaction occurred that is counted as a separate year for purposes of determining the years to which a net capital loss may be carried.

(ii) *Special status losses*. [Reserved]

(c) *Limitations on net capital loss carryovers and carrybacks from separate return limitation years*. The aggregate of the net capital losses of a member arising (or treated as arising) in SRLYs that are included in the determination of consolidated capital gain net income for all consolidated return years of the group under paragraph (a) of this section may not exceed the aggregate of the consolidated capital gain net income for all consolidated return years of the group determined by reference to only the member's items of gain and loss from capital assets as defined in section 1221 and trade or business assets defined in section 1231(b), including the member's losses actually absorbed by the group in the taxable year (whether or not absorbed by the member). The principles of §1.1502–21(c) (including the SRLY subgroup principles under §1.1502–21(c)(2)) apply with appropriate adjustments for purposes of applying this paragraph (c).

(d) *Coordination with respect to consolidated return change of ownership limitation occurring in consolidated return years beginning before January 1, 1997*. If a consolidated return change of ownership occurred before January 1, 1997, the principles of §1.1502–22A(d) apply to determine the amount of the aggregate of the net capital loss attributable to old members of the group (as those terms are defined in §1.1502–1(g)), that may be included in the net capital loss carryover under paragraph (b) of this section. For this purpose, §1.1502–1(g) is applied by treating that date as the end of the year of change.

(e) *Consolidated net capital loss*. Any excess of losses over gains, as determined under paragraph (a) of this section (without regard to any carryovers or carrybacks), is also referred to as the consolidated net capital loss.

(f) *Predecessors and successors*. For purposes of this section, the principles of §1.1502–21(f) apply with appropriate adjustments.

(g) *Overlap with section 383*—(1) *General rule*. The limitation provided in paragraph (c) of this section does not apply to net capital loss carryovers ((other than a hypothetical carryover like those described in §1.1502–21(c)(1)(i)(D) and a carryover like those described in §1.1502–21(c)(1)(ii)) when the application of paragraph (c) of this section results in an overlap with the application of section 383. For a similar rule applying in the case of net capital loss carryovers like those described in §§1.1502–21(c)(1)(i)(D) and (c)(1)(ii), see §1.1502–15(g).

(2) *Definitions*—(i) *Generally*. For purposes of this paragraph (g), the definitions and nomenclature contained in sections 382 and 383, the regulations thereunder, and §§1.1502–90 through 1.1502–99 apply.

(ii) *Overlap*. (A) An overlap of the application of paragraph (c) of this section and the application of section 383 with respect to a net capital loss carryover occurs if a corporation becomes a member of the consolidated group (the SRLY event) within six months of the change date of an ownership change giving rise to a section 382 limitation with respect to that carryover (the section 383 event).

(B) If an overlap described in paragraph (g)(2)(ii)(A) of this section occurs with respect to net capital loss carryovers of a corporation whose SRLY event occurs within the six month period beginning on the date of a section 383 event, then an overlap is treated as also occurring with respect to that corporation's net capital loss carryover that arises within the period beginning with the section 383 event and ending with the SRLY event.

(C) For special rules in the event that there is a SRLY subgroup and/or a loss subgroup as defined in §1.1502–91(d)(1) with respect to a carryover, see paragraph (g)(4) of this section.

(3) *Operating rules*—(i) *Section 383 event before SRLY event*. If a SRLY event occurs on the same date as a section 383 event or within the six month

period beginning on the date of the section 383 event, paragraph (g)(1) of this section applies beginning with the tax year that includes the SRLY event.

(ii) *SRLY event before section 383 event.* If a section 383 event occurs within the period beginning the day after the SRLY event and ending six months after the SRLY event, paragraph (g)(1) of this section applies starting with the first tax year that begins after the section 383 event.

(4) *Subgroup rules.* In general, in the case of a net capital loss carryover for which there is a SRLY subgroup and a loss subgroup (as defined in § 1.1502–91(d)(1)), the principles of this paragraph (g) apply to the SRLY subgroup, and not separately to its members. However, paragraph (g)(1) of this section applies—

(i) With respect to a carryover described in paragraph (g)(2)(ii)(A) of this section only if—

(A) All members of the SRLY subgroup with respect to that carryover are also included in a loss subgroup with respect to that carryover; and

(B) All members of a loss subgroup with respect to that carryover are also members of a SRLY subgroup with respect to that carryover; and

(ii) With respect to a carryover described in paragraph (g)(2)(ii)(B) of this section only if all members of the SRLY subgroup for that carryover are also members of a SRLY subgroup that has net capital loss carryovers described in paragraph (g)(2)(ii)(A) of this section that are subject to the overlap rule of paragraph (g)(1) of this section.

(h) *Effective date*—(1) *In general.* This section generally applies to taxable years for which the due date (without extensions) of the consolidated return is after June 25, 1999. However—

(i) In the event that paragraph (g)(1) of this section does not apply to a particular net capital loss carryover in the current group, then solely for purposes of applying paragraph (c) of this section to determine a limitation with respect to that carryover and with respect to which the SRLY register (consolidated taxable income determined by reference to only the member's or subgroup's items of income, gain, deduction, or loss) began in a taxable year for which the due date of the return was on or before June 25, 1999, the principles of § 1.1502–21(c)(2) shall be applied without regard to the phrase ''or for a carryover that was subject to the overlap rule described in paragraph (g) of this section or § 1.1502–15(g) with respect to another group (the former group)''; and

(ii) For purposes of paragraph (g) of this section, only an ownership change to which section 383, as amended by the Tax Reform Act of 1986, applies and which results in a section 382 limitation shall constitute a section 383 event.

(2) *Prior periods.* For certain taxable years ending on or before June 25, 1999, see § 1.1502–22T in effect prior to June 25, 1999, as contained in 26 CFR part 1 revised April 1, 1999, as applicable.

[T.D. 8823, 64 FR 36114, July 2, 1999]

§ 1.1502–23 Consolidated net section 1231 gain or loss.

(a) *In general.* Net section 1231 gains and losses of members arising during consolidated return years are not determined separately. Instead, the consolidated net section 1231 gain or loss is determined under this section for the group as a whole.

(b) *Example.* The following example illustrates the provisions of this section:

Example. Use of SRLY registers with net gains and net losses under section 1231. (i) In Year 1, T sustains a $20 net capital loss. At the beginning of Year 2, T becomes a member of the P group. T's capital loss carryover from Year 1 is subject to SRLY limits under § 1.1502–22(c). The members of the P group contribute the following to the consolidated taxable income for Year 2 (computed without regard to T's net capital loss carryover under § 1.1502–22):

	P	T
Year 1 (SRLY)		
Ordinary	.....	.....
Capital	.....	(20)
Year 2		
Ordinary	10	20
Capital	70	0
§ 1231	(60)	30

(ii) Under section 1231, if the section 1231 losses for any taxable year exceed the section 1231 gains for such taxable year, such gains and losses are treated as ordinary

gains or losses. Because the P group's section 1231 losses, $(60), exceed the section 1231 gains, $30, the P group's net loss is treated as an ordinary loss. T's net section 1231 gain has the same character as the P group's consolidated net section 1231 loss, so T's $30 of section 1231 income is treated as ordinary income for purposes of applying §1.1502–22(c). Under §1.1502–22(c), the group's consolidated net capital gain determined by reference only to T's items is $0. None of T's capital loss carryover from Year 1 may be taken into account in Year 2.

(c) *Recapture of ordinary loss.* [Reserved]

(d) *Effective date*—(1) *In general.* This section applies to gains and losses arising in the determination of consolidated net section 1231 gain or loss for taxable years for which the due date (without extensions) of the consolidated return is after June 25, 1999.

(2) *Application to prior periods.* See §1.1502–21(h)(3) for rules applicable to groups that applied the rules of this section to consolidated return years ending on or after January 29, 1991, and beginning before January 1, 1997.

[T.D. 8823, 64 FR 36115, July 2, 1999; 64 FR 41784, Aug. 2, 1999]

§1.1502–24 Consolidated charitable contributions deduction.

(a) *Determination of amount of consolidated charitable contributions deduction.* The deduction allowed by section 170 for the taxable year shall be the lesser of:

(1) The aggregate deductions of the members of the group allowable under section 170 (determined without regard to section 170(b)(2)), plus the consolidated charitable contribution carryovers to such year, or

(2) Five percent of the adjusted consolidated taxable income as determined under paragraph (c) of this section.

(b) *Carryover of excess charitable contributions.* The consolidated charitable contribution carryovers to any consolidated return year shall consist of any excess consolidated charitable contributions of the group, plus any excess charitable contributions of members of the group arising in separate return years of such members, which may be carried over to the taxable year under the principles of section 170(b) (2) and (3). However, such consolidated carryovers shall not include any excess charitable contributions apportioned to a corporation for a separate return year pursuant to paragraph (e) of §1.1502–79.

(c) *Adjusted consolidated taxable income.* For purposes of this section, the adjusted consolidated taxable income of the group for any consolidated return year shall be the consolidated taxable income computed without regard to this section, section 242, section 243(a) (2) and (3), §1.1502–25, §1.1502–26, and §1.1502–27, and without regard to any consolidated net operating or net capital loss carrybacks to such year.

[T.D. 6894, 31 FR 11794, Sept. 8, 1966]

§1.1502–26 Consolidated dividends received deduction.

(a) *In general.* (1) The consolidated dividends received deduction for the taxable year shall be the lesser of:

(i) The aggregate of the deduction of the members of the group allowable under sections 243(a)(1), 244(a), and 245 (computed without regard to the limitations provided in section 246(b)), or

(ii) 85 percent of the consolidated taxable income computed without regard to the consolidated net operating loss deduction, consolidated section 247 deduction, the consolidated dividends received deduction, and any consolidated net capital loss carryback to the taxable year.

Subdivision (ii) of this subparagraph shall not apply for any consolidated return year for which there is a consolidated net operating loss. (See §§1.1502–21(e) or 1.1502–21A(f), as appropriate for the definition of a consolidated net operating loss.)

(2) If any member computes a deduction under section 593(b)(2) for a taxable year beginning after July 11, 1969, and ending before August 30, 1975, the deduction otherwise computed under this section shall be reduced by an amount determined by multiplying the deduction (determined without regard to this sentence and without regard to dividends received by the common parent if such parent does not use the percentage of income method provided by section 593(b)(2)) by the applicable percentage of the member with the highest applicable percentage (determined under subparagraphs (A) and (B) of section 593(b)(2)).

(3) For taxable years ending on or after August 30, 1975, the deduction otherwise computed under this section shall be reduced by the sum of the amounts determined under paragraph (a)(4) of this section for each member that is a thrift institution that computes a deduction under section 593(b)(2).

(4) For each thrift institution, the amount determined under this subparagraph is the product of:

(i) The portion of the deduction determined with regard to the sum of the dividends received by: (A) The thrift institution, and (B) any member in which that thrift institution owns, directly and with the application of paragraph (a)(5) of this section, 5 percent or more of the stock on any day during the consolidated return year, and

(ii) The thrift institution's applicable percentage determined under subparagraphs (A) and (B) of section 593(b)(2).

For purposes of this subparagraph, dividends allocated to a thrift institution under § 1.596–1(c) shall be considered received by the thrift institution.

(5) For purposes of paragraph (a)(4)(i) of this section, a member owning stock of another member (the ''second member'') shall be considered as owning its proportionate share of any stock of a member owned by the second member. Stock considered as being owned by reason of the preceding sentence shall, for purposes of applying that sentence, be treated as actually owned. The proportionate share of stock in a member owned by another member is the proportion which the value of the stock so owned bears to the value of all the outstanding stock in the member. For purposes of this paragraph the term ''stock'' includes nonvoting stock which is limited and preferred as to dividends.

(6) For purposes of paragraph (a)(4)(i) of this section, if two or more thrift institutions that are both members of the group each owns 5 percent or more of the same member's stock, the member's stock will be considered to be owned only by the thrift institution with the highest applicable percentage.

(b) *Intercompany dividends*. The deduction determined under paragraph (a) of this section is determined without taking into account intercompany dividends to the extent that, under § 1.1502–13(f)(2), they are not included in gross income. See § 1.1502–13 for additional rules relating to intercompany dividends.

(c) *Examples*. The provisions of this section may be illustrated by the following examples:

Example 1. Corporations P, S, and S–1 filed a consolidated return for the calendar year 1966 showing consolidated taxable income of $100,000 (determined without regard to the consolidated net operating loss deduction, consolidated dividends received deduction, and the consolidated section 247 deduction). Such corporations received dividends during such year from nonmember domestic corporations as follows:

	Dividends
Corporation:	
P	$6,000
S	10,000
S–1	34,000
Total	50,000

The dividends received deduction allowable to each member under section 243(a)(1) (computed without regard to the limitation in section 246(b)) is as follows: P has $5,100 (85 percent of $6,000), S has $8,500 (85 percent of $10,000), and S–1 has $28,900 (85 percent of $34,000), or a total of $42,500. Since $42,500 is less than $85,000 (85 percent of $100,000), the consolidated dividends received deduction is $42,500.

Example 2. Assume the same facts as in example (1) except that consolidated taxable income (computed without regard to the consolidated net operating loss deduction, consolidated dividends received deduction, and the consolidated section 247 deduction) was $40,000. The aggregate of the dividends received deductions, $42,500, computed without regard to section 246(b), results in a consolidated net operating loss of $2,500. See section 172(d)(6). Therefore, paragraph (a)(2) of this section does not apply and the consolidated dividends received deduction is $42,500.

[T.D. 6894, 31 FR 11794, Sept. 8, 1966, as amended by T.D. 7631, 44 FR 40497, July 11, 1979; T.D. 8597, 60 FR 36710, July 18, 1995; T.D. 8677, 61 FR 33323, June 27, 1996; T.D. 8823, 64 FR 36099, July 2, 1999]

§ 1.1502–27 Consolidated section 247 deduction.

(a) *Amount of deduction*. The consolidated section 247 deduction for the taxable year shall be an amount computed as follows:

(1) First, determine the amount which is the lesser of:

(i) The aggregate of the dividends paid (within the meaning of section 247(a)) during such year by members of the group which are public utilities (within the meaning of section 247(b)(1)) on preferred stock (within the meaning of section 247(b)(2)), other than dividends paid to other members of the group, or

(ii) The aggregate of the taxable income (or loss) (as determined under paragraph (b) of this section) of each such member which is a public utility.

(2) Then, multiply the amount determined under subparagraph (1) of this paragraph by the fraction specified in section 247(a)(2).

(b) *Computation of taxable income.* For purposes of paragraph (a)(1)(ii) of this section, the taxable income (or loss) of a member of the group described in paragraph (a)(1)(i) shall be determined under §1.1502–12, adjusted for the following items taken into account in the computation of consolidated taxable income:

(1) The portion of the consolidated net operating loss deduction, the consolidated charitable contributions deduction, and the consolidated dividends received deduction, attributable to such member;

(2) Such member's capital gain net income (net capital gain for taxable years beginning before January 1, 1977) (determined without regard to any net capital loss carryover or carryback attributable to such member);

(3) Such member's net capital loss and section 1231 net loss, reduced by the portion of the consolidated net capital loss attributable to such member; and

(4) The portion of any consolidated net capital loss carryover or carryback attributable to such member which is absorbed in the taxable year.

[T.D. 6894, 31 FR 11794, Sept. 8, 1966, as amended by T.D. 7728, 45 FR 72650, Nov. 3, 1980]

§1.1502–28 Consolidated section 108.

(a) *In general.* This section sets forth rules for the application of section 108(a) and the reduction of tax attributes pursuant to section 108(b) when a member of the group realizes discharge of indebtedness income that is excluded from gross income under section 108(a) (excluded COD income).

(1) *Application of section 108(a).* Section 108(a)(1)(A) and (B) is applied separately to each member that realizes excluded COD income. Therefore, the limitation of section 108(a)(3) on the amount of discharge of indebtedness income that is treated as excluded COD income is determined based on the assets (including stock and securities of other members) and liabilities (including liabilities to other members) of only the member that realizes excluded COD income.

(2) *Reduction of tax attributes attributable to the debtor*—(i) *In general.* With respect to a member that realizes excluded COD income in a taxable year, the tax attributes attributable to that member (and its direct and indirect subsidiaries to the extent required by section 1017(b)(3)(D) and paragraph (a)(3) of this section), including basis of assets and losses and credits arising in separate return limitation years, shall be reduced as provided in sections 108 and 1017 and this section. Basis of subsidiary stock, however, shall not be reduced below zero pursuant to paragraph (a)(2) of this section (including when subsidiary stock is treated as depreciable property under section 1017(b)(3)(D) when there is an election under section 108(b)(5)).

(ii) *Consolidated tax attributes attributable to a member.* For purposes of this section, the amount of a consolidated tax attribute (e.g., a consolidated net operating loss) that is attributable to a member shall be determined pursuant to the principles of §1.1502–21(b)(2)(iv). In addition, if the member is a member of a separate return limitation year subgroup, the amount of a tax attribute that arose in a separate return limitation year that is attributable to that member shall also be determined pursuant to the principles of §1.1502–21(b)(2)(iv).

(3) *Look-through rules*—(i) *Priority of section 1017(b)(3)(D).* If a member treats stock of a subsidiary as depreciable property pursuant to section 1017(b)(3)(D), the basis of the depreciable property of such subsidiary shall be reduced pursuant to section 1017(b)(3)(D) prior to the application of paragraph (a)(3)(ii) of this section.

(ii) *Application of additional look-through rule.* If the basis of stock of a corporation (the lower-tier member) that is owned by another corporation (the higher-tier member) is reduced pursuant to sections 108 and 1017 and paragraph (a)(2) of this section (but not as a result of treating subsidiary stock as depreciable property pursuant to section 1017(b)(3)(D)), and both of such corporations are members of the same consolidated group on the last day of the higher-tier member's taxable year that includes the date on which the excluded COD income is realized or the first day of the higher-tier member's taxable year that follows the taxable year that includes the date on which the excluded COD income is realized, solely for purposes of sections 108 and 1017 and this section other than paragraphs (a)(4) and (b)(1) of this section, the lower-tier member shall be treated as realizing excluded COD income on the last day of the taxable year of the higher-tier member that includes the date on which the higher-tier member realized the excluded COD income. The amount of such excluded COD income shall be the amount of such basis reduction. Accordingly, the tax attributes attributable to such lower-tier member shall be reduced as provided in sections 108 and 1017 and this section. To the extent that the excluded COD income realized by the lower-tier member pursuant to this paragraph (a)(3) does not reduce a tax attribute attributable to the lower-tier member, such excluded COD income shall not be applied to reduce tax attributes attributable to any member under paragraph (a)(4) of this section and shall not cause an excess loss account to be taken into account under §1.1502–19(b)(1) and (c)(1)(iii)(B).

(4) *Reduction of certain tax attributes attributable to other members.* To the extent that, pursuant to paragraph (a)(2) of this section, the excluded COD income is not applied to reduce the tax attributes attributable to the member that realizes the excluded COD income, after the application of paragraph (a)(3) of this section, such amount shall be applied to reduce the remaining consolidated tax attributes of the group, other than consolidated tax attributes to which a SRLY limitation applies, as provided in section 108 and this section. Such amount also shall be applied to reduce the tax attributes attributable to members that arose (or are treated as arising) in a separate return limitation year to the extent that the member that realizes excluded COD income is a member of the separate return limitation year subgroup with respect to such attribute if a SRLY limitation applies to the use of such attribute. In addition, such amount shall be applied to reduce the tax attributes attributable to members that arose in a separate return year or that arose (or are treated as arising) in a separate return limitation year if no SRLY limitation applies to the use of such attribute. The reduction of each tax attribute pursuant to the three preceding sentences shall be made in the order prescribed in section 108(b)(2) and pursuant to the principles of §1.1502–21(b)(1). Except as otherwise provided in this paragraph (a)(4), a tax attribute that arose in a separate return year or that arose (or is treated as arising) in a separate return limitation year is not subject to reduction pursuant to this paragraph (a)(4). Basis in assets is not subject to reduction pursuant to this paragraph (a)(4). Finally, to the extent that the realization of excluded COD income by a member pursuant to paragraph (a)(3) does not reduce a tax attribute attributable to such lower-tier member, such excess shall not be applied to reduce tax attributes attributable to any member pursuant to this paragraph (a)(4).

(b) *Special rules*—(1) *Multiple debtor members*—(i) *Reduction of tax attributes attributable to debtor members prior to reduction of consolidated tax attributes.* If in a single taxable year multiple members realize excluded COD income, paragraphs (a)(2) and (3) of this section shall apply with respect to the excluded COD income of each such member before the application of paragraph (a)(4) of this section.

(ii) *Reduction of higher-tier debtor's tax attributes.* If in a single taxable year multiple members realize excluded COD income and one such member is a higher-tier member of another such member, paragraphs (a)(2) and (3) of this section shall be applied with respect to the excluded COD income of

the higher-tier member before such paragraphs are applied to the excluded COD income of the other such member. In applying the rules of paragraph (a)(2) and (3) of this section with respect to the excluded COD income of the higher-tier member, the liabilities that give rise to the excluded COD income of the other such member shall not be treated as discharged for purposes of computing the limitation on basis reduction under section 1017(b)(2). A member (the first member) is a higher-tier member of another member (the second member) if the first member is the common parent or investment adjustments under § 1.1502–32 with respect to the stock of the second member would affect investment adjustments with respect to the stock of the first member.

(iii) *Reduction of additional tax attributes.* If more than one member realizes excluded COD income that has not been applied to reduce a tax attribute attributable to such member (the remaining COD amount) and the remaining tax attributes available for reduction under paragraph (a)(4) of this section are less than the aggregate of the remaining COD amounts, after the application of paragraph (a)(2) of this section, each such member's remaining COD amount shall be applied on a pro rata basis (based on the relative remaining COD amounts), pursuant to paragraph (a)(4) of this section, to reduce such remaining available tax attributes.

(iv) *Ownership of lower-tier member by multiple higher-tier members.* If stock of a corporation is held by more than one higher-tier member of the group and more than one such higher-tier member reduces its basis in such stock, then under paragraph (a)(3) of this section the excluded COD income resulting from the stock basis reductions shall be applied on a pro rata basis (based on the amount of excluded COD income caused by each basis reduction) to reduce the attributes of the corporation.

(v) *Ownership of lower-tier member by multiple higher-tier members in multiple groups.* If a corporation is a member of one group (the first group) on the last day of the first group's higher-tier member's taxable year that includes the date on which that higher-tier member realizes excluded COD income and is a member of another group (the second group) on the following day and the first group's higher-tier member and the second group's higher-tier member both reduce their basis in the stock of such corporation pursuant to sections 108 and 1017 and this section, paragraph (a)(3) of this section shall first be applied in respect of the excluded COD income that results from the reduction of the basis of the corporation's stock owned by the first group's higher-tier member and then shall be applied in respect of the excluded COD income that results from the reduction of the basis of the corporation's stock owned by the second group's higher-tier member.

(2) *Election under section 108(b)(5)*—(i) *Availability of election.* The group may make the election described in section 108(b)(5) for any member that realizes excluded COD income. The election is made separately for each member. Therefore, an election may be made for one member that realizes excluded COD income (either actually or pursuant to paragraph (a)(3) of this section) while another election, or no election, may be made for another member that realizes excluded COD income (either actually or pursuant to paragraph (a)(3) of this section). See § 1.108–4 for rules relating to the procedure for making an election under section 108(b)(5).

(ii) *Treatment of shares with an excess loss account.* For purposes of applying section 108(b)(5)(B), the basis of stock of a subsidiary that has an excess loss account shall be treated as zero.

(3) *Application of section 1017*—(i) *Timing of basis reduction.* Basis of property shall be subject to reduction pursuant to the rules of sections 108 and 1017 and this section after the determination of the tax imposed by chapter 1 of the Internal Revenue Code for the taxable year during which the member realizes excluded COD income and any prior years and coincident with the reduction of other attributes pursuant to section 108 and this section. However, only the basis of property held as of the beginning of the taxable year following the taxable year during which the excluded COD income is realized is

subject to reduction pursuant to sections 108 and 1017 and this section.

(ii) *Limitation of section 1017(b)(2).* The limitation of section 1017(b)(2) on the reduction in basis of property shall be applied by reference to the aggregate of the basis of the property held by the member that realizes excluded COD income, not the aggregate of the basis of the property held by all of the members of the group, and the liabilities of such member, not the aggregate liabilities of all of the members of the group.

(iii) *Treatment of shares with an excess loss account.* For purposes of applying section 1017(b)(2) and §1.1017–1, the basis of stock of a subsidiary that has an excess loss account shall be treated as zero.

(4) *Application of section 1245.* Notwithstanding section 1017(d)(1)(B), a reduction of the basis of subsidiary stock is treated as a deduction allowed for depreciation only to the extent that the amount by which the basis of the subsidiary stock is reduced exceeds the total amount of the attributes attributable to such subsidiary that are reduced pursuant to the subsidiary's consent under section 1017(b)(3)(D) or as a result of the application of paragraph (a)(3)(ii) of this section.

(5) *Reduction of basis of intercompany obligations and former intercompany obligations*—(i) *Intercompany obligations that cease to be intercompany obligations.* If excluded COD income is realized in a consolidated return year in which an intercompany obligation becomes an obligation that is not an intercompany obligation because the debtor or creditor becomes a nonmember, or because the assets of the debtor or the creditor are acquired by a nonmember in a transaction to which section 381 applies, then the basis of such intercompany obligation (or new obligation if the intercompany obligation is deemed reissued under §1.1502–13(g)(3)) is available for reduction in respect of such excluded COD income pursuant to sections 108 and 1017 and this section.

(ii) *Intercompany obligations.* The reduction of the basis of an intercompany obligation pursuant to sections 108 and 1017 and this section shall not result in the satisfaction and reissuance of the obligation under §1.1502–13(g). Therefore, any income or gain (or reduction of loss or deduction) attributable to a reduction of the basis of an intercompany obligation will be taken into account when §1.1502–13(g)(3) applies to such obligation. Furthermore, §1.1502–13(c)(6)(i) (regarding the treatment of intercompany items if corresponding items are excluded or nondeductible) will not apply to exclude any amount of income or gain attributable to a reduction of the basis of an intercompany obligation pursuant to sections 108 and 1017 and this section. See §1.1502–13(g)(3)(i)(A)(*1*) and (g)(4)(i)(A).

(6) *Taking into account excess loss account*—(i) *Determination of inclusion.* The determination of whether any portion of an excess loss account in a share of stock of a subsidiary that realizes excluded COD income is required to be taken into account as a result of the application of §1.1502–19(c)(1)(iii)(B) is made after the determination of the tax imposed by chapter 1 of the Internal Revenue Code for the year during which the member realizes excluded COD income (without regard to whether any portion of an excess loss account in a share of stock of the subsidiary is required to be taken into account) and any prior years, after the reduction of tax attributes pursuant to sections 108 and 1017 and this section, and after the adjustment of the basis of the share of stock of the subsidiary pursuant to §1.1502–32 to reflect the amount of the subsidiary's deductions and losses that are absorbed in the computation of taxable income (or loss) for the year of the disposition and any prior years, and the excluded COD income applied to reduce attributes and the attributes reduced in respect thereof. See §1.1502–11(c) for special rules related to the computation of tax that apply when an excess loss account is required to be taken into account.

(ii) *Timing of inclusion.* To the extent an excess loss account in a share of stock of a subsidiary that realizes excluded COD income is required to be taken into account as a result of the application of §1.1502–19(c)(1)(iii)(B), such amount shall be included on the group's tax return for the taxable year that includes the date on which the subsidiary realizes such excluded COD income.

(7) *Dispositions of stock*. See § 1.1502–11(c) for limitations on the reduction of tax attributes when a member disposes of stock of another member (including dispositions that result from the application of § 1.1502–19(c)(1)(iii)(B)) during a taxable year in which any member realizes excluded COD income.

(8) *Departure of member*. If the taxable year of a member (the departing member) during which such member realizes excluded COD income ends on or prior to the last day of the consolidated return year and, on the first day of the taxable year of such member that follows the taxable year during which such member realizes excluded COD income, such member is not a member of the group and does not have a successor member (within the meaning of paragraph (b)(10) of this section), all tax attributes listed in section 108(b)(2) that remain after the determination of the tax imposed that belong to members of the group (including the departing member and subsidiaries of the departing member) shall be subject to reduction as provided in section 108 and the regulations promulgated thereunder (including § 1.108–7(c), if applicable) and this section.

(9) *Intragroup reorganization*—(i) *In general*. If the taxable year of a member during which such member realizes excluded COD income ends prior to the last day of the consolidated return year and, on the first day that follows the taxable year of such member during which such member realizes excluded COD income, such member has a successor member, for purposes of applying the rules of sections 108 and 1017 and this section, notwithstanding § 1.108–7, the successor member shall be treated as the member that realized the excluded COD income. Thus, all attributes attributable to the successor member listed in section 108(b)(2) (including attributes that were attributable to the successor member prior to the date such member became a successor member) are available for reduction under paragraph (a)(2) of this section.

(ii) *Group structure change*. If a member that realizes excluded COD income acquires the assets of the common parent of the consolidated group in a transaction to which section 381(a) applies and succeeds such common parent under the principles of § 1.1502–75(d)(2) as the common parent of the consolidated group, the member's attributes that remain after the determination of tax for the group for the consolidated return year during which the excluded COD income is realized (and any prior years) (including attributes that were attributable to the former common parent prior to the date of the transaction to which section 381(a) applies) shall be available for reduction under paragraph (a)(2) of this section.

(10) *Definition of successor member*. A successor member means a person to which the member that realizes excluded COD income (or a successor member) transfers its assets in a transaction to which section 381(a) applies if such transferee is a member of the group immediately after the transaction.

(11) *Non-application of next day rule*. For purposes of applying the rules of sections 108 and 1017 and this section, the next day rule of § 1.1502–76(b)(1)(ii)(B) shall not apply to treat a member's excluded COD income as realized at the beginning of the day following the day on which such member's status as a member changes.

(c) *Examples*. The principles of paragraphs (a) and (b) of this section are illustrated by the following examples. Unless otherwise indicated, no election under section 108(b)(5) has been made and the taxable year of all consolidated groups is the calendar year. The examples are as follows:

Example 1. (i) *Facts*. P is the common parent of a consolidated group that includes subsidiary S1. P owns 80 percent of the stock of S1. In Year 1, the P group sustained a $250 consolidated net operating loss. Under the principles of § 1.1502–21(b)(2)(iv), of that amount, $125 was attributable to P and $125 was attributable to S1. On Day 1 of Year 2, P acquired 100 percent of the stock of S2, and S2 joined the P group. As of the beginning of Year 2, S2 had a $50 net operating loss carryover from Year 1, a separate return limitation year. In Year 2, the P group sustained a $200 consolidated net operating loss. Under the principles of § 1.1502–21(b)(2)(iv), of that amount, $90 was attributable to P, $70 was attributable to S1, and $40 was attributable to S2. In Year 3, S2 realized $200 of excluded COD income from the discharge of non-intercompany indebtedness. In that same year, the P group sustained a $50 consolidated net

operating loss, of which $40 was attributable to S1 and $10 was attributable to S2 under the principles of § 1.1502–21(b)(2)(iv). As of the beginning of Year 4, S2 had Asset A with a fair market value of $10. After the computation of tax imposed for Year 3 and before the application of sections 108 and 1017 and this section, Asset A had a basis of $40 and S2 had no liabilities.

(ii) *Analysis*—(A) *Reduction of tax attributes attributable to debtor*. Pursuant to paragraph (a)(2) of this section, the tax attributes attributable to S2 must first be reduced to take into account its excluded COD income in the amount of $200.

(*1*) *Reduction of net operating losses*. Pursuant to section 108(b)(2)(A) and paragraph (a) of this section, the net operating loss and the net operating loss carryovers attributable to S2 under the principles of § 1.1502–21(b)(2)(iv) are reduced in the order prescribed by section 108(b)(4)(B). Accordingly, the consolidated net operating loss for Year 3 is reduced by $10, the portion of the consolidated net operating loss attributable to S2, to $40. Then, again pursuant to section 108(b)(4)(B), S2's net operating loss carryover of $50 from its separate return limitation year is reduced to $0. Finally, the consolidated net operating loss carryover from Year 2 is reduced by $40, the portion of that consolidated net operating loss carryover attributable to S2, to $160.

(*2*) *Reduction of basis*. Following the reduction of the net operating loss and the net operating loss carryovers attributable to S2, S2 reduces its basis in its assets pursuant to section 1017 and § 1.1017–1. Accordingly, S2 reduces its basis in Asset A by $40, from $40 to $0.

(B) *Reduction of remaining consolidated tax attributes*. The remaining $60 of excluded COD income then reduces consolidated tax attributes pursuant to paragraph (a)(4) of this section. In particular, the remaining $40 consolidated net operating loss for Year 3 is reduced to $0. Then, the consolidated net operating loss carryover from Year 1 is reduced by $20 from $250 to $230. Pursuant to paragraph (a)(4) of this section, a pro rata amount of the consolidated net operating loss carryover from Year 1 that is attributable to each of P and S1 is treated as reduced. Therefore, $10 of the consolidated net operating loss carryover from Year 1 that is attributable to each of P and S1 is treated as reduced.

Example 2. (i) *Facts*.P is the common parent of a consolidated group that includes subsidiaries S1 and S2. P owns 100 percent of the stock of S1 and S1 owns 100 percent of the stock of S2. None of P, S1, or S2 has a separate return limitation year. In Year 1, the P group sustained a $50 consolidated net operating loss. Under the principles of § 1.1502–21(b)(2)(iv), of that amount, $10 was attributable to P, $20 was attributable to S1, and $20 was attributable to S2. In Year 2, the P group sustained a $70 consolidated net operating loss. Under the principles of § 1.1502–21(b)(2)(iv), of that amount, $30 was attributable to P, $30 was attributable to S1, and $10 was attributable to S2. In Year 3, S1 realized $170 of excluded COD income from the discharge of non-intercompany indebtedness. In that same year, the P group sustained a $50 consolidated net operating loss, of which $10 was attributable to S1 and $40 was attributable to S2 under the principles of § 1.1502–21(b)(2)(iv). As of the beginning of Year 4, S1's sole asset was the stock of S2, and S2 had Asset A with a $10 value. After the computation of tax imposed for Year 3 and before the application of sections 108 and 1017 and this section, S1 had an $80 basis in the S2 stock, Asset A had a basis of $0, and neither S1 nor S2 had any liabilities.

(ii) *Analysis*—(A) *Reduction of tax attributes attributable to debtor*. Pursuant to paragraph (a)(2) of this section, the tax attributes attributable to S1 must first be reduced to take into account its excluded COD income in the amount of $170.

(*1*) *Reduction of net operating losses*. Pursuant to section 108(b)(2)(A) and paragraph (a) of this section, the net operating loss and the net operating loss carryovers attributable to S1 under the principles of § 1.1502–21(b)(2)(iv) are reduced in the order prescribed by section 108(b)(4)(B). Accordingly, the consolidated net operating loss for Year 3 is reduced by $10, the portion of the consolidated net operating loss for Year 3 attributable to S1, to $40. Then, the consolidated net operating loss carryover from Year 1 is reduced by $20, the portion of that consolidated net operating loss carryover attributable to S1, to $30, and the consolidated net operating loss carryover from Year 2 is reduced by $30, the portion of that consolidated net operating loss carryover attributable to S1, to $40.

(*2*) *Reduction of basis*. Following the reduction of the net operating loss and the net operating loss carryovers attributable to S1, S1 reduces its basis in its assets pursuant to section 1017 and § 1.1017–1. Accordingly, S1 reduces its basis in the stock of S2 by $80, from $80 to $0.

(*3*) *Tiering down of stock basis reduction*. Pursuant to paragraph (a)(3) of this section, for purposes of sections 108 and 1017 and this section, S2 is treated as realizing $80 of excluded COD income. Pursuant to section 108(b)(2)(A) and paragraph (a) of this section, therefore, the net operating loss and net operating loss carryovers attributable to S2 under the principles of § 1.1502–21(b)(2)(iv) are reduced in the order prescribed by section 108(b)(4)(B). Accordingly, the consolidated net operating loss for Year 3 is reduced by an additional $40, the portion of the consolidated net operating loss for Year 3 attributable to S2, to $0. Then, the consolidated

net operating loss carryover from Year 1 is reduced by $20, the portion of that consolidated net operating loss carryover attributable to S2, to $10. Then, the consolidated net operating loss carryover from Year 2 is reduced by $10, the portion of that consolidated net operating loss carryover attributable to S2, to $30. S2's remaining $10 of excluded COD income does not reduce consolidated tax attributes attributable to P or S1 under paragraph (a)(4) of this section.

(B) *Reduction of remaining consolidated tax attributes.* Finally, pursuant to paragraph (a)(4) of this section, S1's remaining $30 of excluded COD income reduces the remaining consolidated tax attributes. In particular, the remaining $10 consolidated net operating loss carryover from Year 1 is reduced by $10 to $0, and the remaining $30 consolidated net operating loss carryover from Year 2 is reduced by $20 to $10.

Example 3. (i) *Facts.* P is the common parent of a consolidated group that includes subsidiaries S1, S2, and S3. P owns 100 percent of the stock of S1, S1 owns 100 percent of the stock of S2, and S2 owns 100 percent of the stock of S3. None of P, S1, S2, or S3 had a separate return limitation year prior to Year 1. In Year 1, the P group sustained a $150 consolidated net operating loss. Under the principles of §1.1502–21(b)(2)(iv), of that amount, $50 was attributable to S2, and $100 was attributable to S3. In Year 2, the P group sustained a $50 consolidated net operating loss. Under the principles of §1.1502–21(b)(2)(iv), of that amount, $40 was attributable to S1 and $10 was attributable to S2. In Year 3, S1 realized $170 of excluded COD income from the discharge of non-intercompany indebtedness. In that same year, the P group sustained a $50 consolidated net operating loss, of which $10 was attributable to S1, $20 was attributable to S2, and $20 was attributable to S3 under the principles of §1.1502–21(b)(2)(iv). At the beginning of Year 4, S1's only asset was the stock of S2, and S2's only asset was the stock of S3 with a value of $10. After the computation of tax imposed for Year 3 and before the application of sections 108 and 1017 and this section, S1's stock of S2 had a basis of $120 and S2's stock of S3 had a basis of $180. In addition, none of S1, S2, and S3 had any liabilities.

(ii) *Analysis*—(A) *Reduction of tax attributes attributable to debtor.* Pursuant to paragraph (a)(2) of this section, the tax attributes attributable to S1 must first be reduced to take into account its excluded COD income in the amount of $170.

(*1*) *Reduction of net operating losses.* Pursuant to section 108(b)(2)(A) and paragraph (a) of this section, the net operating loss and the net operating loss carryovers attributable to S1 under the principles of §1.1502–21(b)(2)(iv) are reduced in the order prescribed by section 108(b)(4)(B). Accordingly, the consolidated net operating loss for Year 3 is reduced by $10, the portion of the consolidated net operating loss attributable to S1, to $40. Then, the consolidated net operating loss carryover from Year 2 is reduced by $40, the portion of that consolidated net operating loss carryover attributable to S1, to $10.

(*2*) *Reduction of basis.* Following the reduction of the net operating loss and the net operating loss carryovers attributable to S1, S1 reduces its basis in its assets pursuant to section 1017 and §1.1017–1. Accordingly, S1 reduces its basis in the stock of S2 by $120, from $120 to $0.

(B) *Tiering down of stock basis reduction to S2.* Pursuant to paragraph (a)(3) of this section, for purposes of sections 108 and 1017 and this section, S2 is treated as realizing $120 of excluded COD income. Pursuant to section 108(b)(2)(A) and paragraph (a) of this section, therefore, the net operating loss and net operating loss carryovers attributable to S2 under the principles of §1.1502–21(b)(2)(iv) are reduced in the order prescribed by section 108(b)(4)(B). Accordingly, the consolidated net operating loss for Year 3 is further reduced by $20, the portion of the consolidated net operating loss attributable to S2, to $20. Then, the consolidated net operating loss carryover from Year 1 is reduced by $50, the portion of that consolidated net operating loss carryover attributable to S2, to $100. Then, the consolidated net operating loss carryover from Year 2 is further reduced by $10, the portion of that consolidated net operating loss carryover attributable to S2, to $0. Following the reduction of the net operating loss and the net operating loss carryovers attributable to S2, S2 reduces its basis in its assets pursuant to section 1017 and §1.1017–1. Accordingly, S2 reduces its basis in its S3 stock by $40 to $140.

(C) *Tiering down of stock basis reduction to S3.* Pursuant to paragraph (a)(3) of this section, for purposes of sections 108 and 1017 and this section, S3 is treated as realizing $40 of excluded COD income. Pursuant to section 108(b)(2)(A) and paragraph (a) of this section, therefore, the net operating loss and the net operating loss carryovers attributable to S3 under the principles of §1.1502–21(b)(2)(iv) are reduced in the order prescribed by section 108(b)(4)(B). Accordingly, the consolidated net operating loss for Year 3 is further reduced by $20, the portion of the consolidated net operating loss attributable to S3, to $0. Then, the consolidated net operating loss carryover from Year 1 is reduced by $20, the lesser of the portion of that consolidated net operating loss carryover attributable to S3 and the remaining excluded COD income, to $80.

Example 4. (i) *Facts.* P is the common parent of a consolidated group that includes subsidiaries S1, S2, and S3. P owns 100 percent of the stock of each of S1 and S2. Each of S1 and S2 owns stock of S3 that represents

50 percent of the value of the stock of S3. None of P, S1, S2, or S3 had a separate return limitation year prior to Year 1. In Year 1, the P group sustained a $160 consolidated net operating loss. Under the principles of § 1.1502–21(b)(2)(iv), of that amount, $10 was attributable to P, $50 was attributable to S2, and $100 was attributable to S3. In Year 2, the P group sustained a $110 consolidated net operating loss. Under the principles of § 1.1502–21(b)(2)(iv), of that amount, $40 was attributable to S1 and $70 was attributable to S2. In Year 3, S1 realized $200 of excluded COD income from the discharge of non-intercompany indebtedness, and S2 realized $270 of excluded COD income from the discharge of non-intercompany indebtedness. In that same year, the P group sustained a $50 consolidated net operating loss, of which $10 was attributable to S1, $20 was attributable to S2, and $20 was attributable to S3 under the principles of § 1.1502–21(b)(2)(iv). At the beginning of Year 4, S3 had one asset with a value of $10. After the computation of tax imposed for Year 3 and before the application of sections 108 and 1017 and this section, S1's basis in its S3 stock was $60, S2's basis in its S3 stock was $120, and S3's asset had a basis of $200. In addition, none of S1, S2, and S3 had any liabilities.

(ii) *Analysis*—(A) *Reduction of tax attributes attributable to debtors*. Pursuant to paragraph (b)(1)(i) of this section, the tax attributes attributable to each of S1 and S2 are reduced pursuant to paragraph (a)(2) of this section. Then, pursuant to paragraph (a)(3) of this section, the tax attributes attributable to S3 are reduced so as to reflect a reduction of S1's and S2's basis in the stock of S3. Then, paragraph (a)(4) is applied to reduce additional tax attributes.

(1) *Reduction of net operating losses generally*. Pursuant to section 108(b)(2)(A) and paragraph (a) of this section, the net operating losses and the net operating loss carryovers attributable to S1 and S2 under the principles of § 1.1502–21(b)(2)(iv) are reduced in the order prescribed by section 108(b)(4)(B).

(2) *Reduction of net operating losses attributable to S1*. The consolidated net operating loss for Year 3 is reduced by $10, the portion of the consolidated net operating loss attributable to S1, to $40. Then, the consolidated net operating loss carryover from Year 2 is reduced by $40, the portion of that consolidated net operating loss carryover attributable to S1, to $70.

(3) *Reduction of net operating losses attributable to S2*. The consolidated net operating loss for Year 3 is also reduced by $20, the portion of the consolidated net operating loss attributable to S2, to $20. Then, the consolidated net operating loss carryover from Year 1 is reduced by $50, the portion of that consolidated net operating loss carryover attributable to S2, to $110. Then, the consolidated net operating loss carryover from Year 2 is reduced by $70, the portion of that consolidated net operating loss carryover attributable to S2, to $0.

(4) *Reduction of basis*. Following the reduction of the net operating losses and the net operating loss carryovers attributable to S1 and S2, S1 and S2 must reduce their basis in their assets pursuant to section 1017 and § 1.1017–1. Accordingly, S1 reduces its basis in the stock of S3 by $60, from $60 to $0, and S2 reduces its basis in the stock of S3 by $120, from $120 to $0.

(B) *Tiering down of basis reduction*. Pursuant to paragraph (a)(3) of this section, for purposes of sections 108 and 1017 and this section, S3 is treated as realizing $180 of excluded COD income. Pursuant to section 108(b)(2)(A) and paragraph (a) of this section, therefore, the net operating loss and the net operating loss carryovers attributable to S3 under the principles of § 1.1502–21(b)(2)(iv) are reduced in the order prescribed by section 108(b)(4)(B). Accordingly, the consolidated net operating loss for Year 3 is further reduced by $20, the portion of the consolidated net operating loss attributable to S3, to $0. Then, the consolidated net operating loss carryover from Year 1 is reduced by $100, the portion of that consolidated net operating loss carryover attributable to S3, to $10. Following the reduction of the net operating loss and the net operating loss carryover attributable to S3, S3 reduces its basis in its asset pursuant to section 1017 and § 1.1017–1. Accordingly, S3 reduces its basis in its asset by $60, from $200 to $140.

(C) *Reduction of remaining consolidated tax attributes*. Finally, pursuant to paragraph (a)(4) of this section, the remaining $90 of S1's excluded COD income and the remaining $10 of S2's excluded COD income reduce the remaining consolidated tax attributes. In particular, the remaining $10 consolidated net operating loss carryover from Year 1 is reduced by $10 to $0. Because that amount is less than the aggregate amount of remaining excluded COD income, such income is applied on a pro rata basis to reduce the remaining consolidated tax attributes. Accordingly, $9 of S1's remaining excluded COD income and $1 of S2's remaining excluded COD income is applied to reduce the remaining consolidated net operating loss carryover from Year 1. Consequently, of S1's excluded COD income of $200, only $119 is applied to reduce tax attributes, and, of S2's excluded COD income of $270, only $261 is applied to reduce tax attributes.

Example 5. (i) *Facts*. P is the common parent of a consolidated group that includes subsidiaries S1, S2, and S3. P owns 100 percent of the stock of S1 and S2, and S1 owns 100 percent of the stock of S3. None of P, S1, S2, or S3 has a separate return limitation year prior to Year 1. In Year 1, the P group sustained a $90 consolidated net operating

loss. Under the principles of § 1.1502–21(b)(2)(iv), of that amount, $10 was attributable to P, $15 was attributable to S1, $20 was attributable to S2, and $45 was attributable to S3. On January 1 of Year 2, P realized $140 of excluded COD income from the discharge of non-intercompany indebtedness. On December 31 of Year 2, S1 issued stock representing 50 percent of the vote and value of its outstanding stock to a person that was not a member of the group. As a result of the issuance of stock, S1 and S3 ceased to be members of the P group. For the consolidated return year of Year 2, the P group sustained a $60 consolidated net operating loss, of which $5 was attributable to S1, $40 was attributable to S2, and $15 was attributable to S3 under the principles of § 1.1502–21(b)(2)(iv). As of the beginning of Year 3, P's only assets were the stock of S1 and S2, S1's sole asset was the stock of S3, S2 had Asset A with a value of $10, and S3 had Asset B with a value of $10. After the computation of tax imposed for Year 2 and before the application of sections 108 and 1017 and this section, P had a $80 basis in the S1 stock and a $50 basis in the S2 stock, S1 had a $80 basis in the S3 stock, and Asset A and B each had a basis of $10. In addition, none of P, S1, S2, and S3 had any liabilities.

(ii) *Analysis*. Pursuant to paragraph (a)(2) of this section, the tax attributes attributable to P must first be reduced to take into account its excluded COD income in the amount of $140.

(A) *Reduction of net operating losses*. Pursuant to section 108(b)(2)(A) and paragraph (a) of this section, the net operating loss and the net operating loss carryover attributable to P under the principles of § 1.1502–21(b)(2)(iv) are reduced in the order prescribed by section 108(b)(4)(B). Accordingly, the consolidated net operating loss carryover from Year 1 is reduced by $10, the portion of that consolidated net operating loss carryover attributable to P, to $80.

(B) *Reduction of basis*. Following the reduction of the net operating loss and the net operating loss carryover attributable to P, P reduces its basis in its assets pursuant to section 1017 and § 1.1017–1. Accordingly, P reduces its basis in the stock of S1 by $80, from $80 to $0, and its basis in the stock of S2 by $50, from $50 to $0.

(C) *Tiering down of stock basis reduction to S1*. Pursuant to paragraph (a)(3) of this section, for purposes of sections 108 and 1017 and this section, S1 is treated as realizing $80 of excluded COD income, despite the fact that it ceases to be a member of the group at the end of the day on December 31 of Year 2. Pursuant to section 108(b)(2)(A) and paragraph (a) of this section, therefore, the net operating loss and net operating loss carryovers attributable to S1 under the principles of § 1.1502–21(b)(2)(iv) are reduced in the order prescribed by section 108(b)(4)(B). Accordingly, the consolidated net operating loss for Year 2 is reduced by $5, the portion of the consolidated net operating loss for Year 2 attributable to S1, to $55. Then, the consolidated net operating loss carryover from Year 1 is reduced by an additional $15, the portion of that consolidated net operating loss carryover attributable to S1, to $65. Following the reduction of the net operating loss and the net operating loss carryover attributable to S1, S1 reduces its basis in its assets pursuant to section 1017 and § 1.1017–1. Accordingly, S1 reduces its basis in the stock of S3 by $60, from $80 to $20.

(D) *Tiering down of stock basis reduction to S2*. Pursuant to paragraph (a)(3) of this section, for purposes of sections 108 and 1017 and this section, S2 is treated as realizing $50 of excluded COD income. Pursuant to section 108(b)(2)(A) and paragraph (a) of this section, therefore, the net operating loss and net operating loss carryovers attributable to S2 under the principles of § 1.1502–21(b)(2)(iv) are reduced in the order prescribed by section 108(b)(4)(B). Accordingly, the consolidated net operating loss for Year 2 is reduced by an additional $40, the portion of the consolidated net operating loss for Year 2 attributable to S2, to $15. Then, the consolidated net operating loss carryover from Year 1 is reduced by an additional $10, a portion of the consolidated net operating loss carryover attributable to S2, to $55.

(E) *Tiering down of stock basis reduction to S3*. Pursuant to paragraph (a)(3) of this section, for purposes of sections 108 and 1017 and this section, S3 is treated as realizing $60 of excluded COD income (by reason of S1's reduction in its basis of its S3 stock). Pursuant to section 108(b)(2)(A) and paragraph (a) of this section, therefore, the net operating loss and net operating loss carryovers attributable to S3 under the principles of § 1.1502–21(b)(2)(iv) are reduced in the order prescribed by section 108(b)(4)(B). Accordingly, the consolidated net operating loss for Year 2 is reduced by an additional $15, the portion of the consolidated net operating loss for Year 2 attributable to S3, to $0. Then, the consolidated net operating loss carryover from Year 1 is reduced by an additional $45, the portion of that consolidated net operating loss carryover attributable to S3, to $10.

Example 6. (i) *Facts*. P1 is the common parent of a consolidated group that includes subsidiaries S1, S2, and S3. P1 owns 100 percent of the stock of S1 and S2. S1 owns 100 percent of the stock of S3. None of P1, S1, S2, or S3 has a separate return limitation year prior to Year 1. In Year 1, the P1 group sustained a $120 consolidated net operating loss. Under the principles of § 1.1502–21(b)(2)(iv), of that amount, $40 was attributable to P1, $35 was attributable to S1, $30 was attributable to S2, and $15 was attributable to S3. On January 1 of Year 2, S3 realized $65 of excluded

COD income from the discharge of non-intercompany indebtedness. On June 30 of Year 2, S3 issued stock representing 80 percent of the vote and value of its outstanding stock to P2, the common parent of another group. As a result of the issuance of stock, S3 ceased to be a member of the P1 group and became a member of the P2 group. For the consolidated return year of Year 2, the P1 group sustained a $50 consolidated net operating loss, of which $5 was attributable to S1, $40 was attributable to S2, and $5 was attributable to S3 under the principles of §1.1502–21(b)(2)(iv). As of the beginning of its taxable year beginning on July 1 of Year 2, S3's sole asset was Asset A with a $10 value. After the computation of tax imposed for Year 2 on the P1 group and before the application of sections 108 and 1017 and this section and the computation of tax imposed for Year 2 on the P2 group, Asset A had a basis of $0. In addition, S3 had no liabilities. On January 1 of Year 3, P1 sold all of its stock of S1.

(ii) *Analysis*—(A) *Reduction of tax attributes attributable to debtor*. Pursuant to paragraph (a)(2) of this section, the tax attributes attributable to S3 must first be reduced to take into account its excluded COD income in the amount of $65. Pursuant to section 108(b)(2)(A) and paragraph (a) of this section, the net operating loss and the net operating loss carryover attributable to S3 under the principles of §1.1502–21(b)(2)(iv) are reduced in the order prescribed by section 108(b)(4)(B). Accordingly, the consolidated net operating loss for Year 2 is reduced by $5, the portion of the consolidated net operating loss for Year 2 attributable to S3, to $45. Then, the consolidated net operating loss carryover from Year 1 is reduced by $15, the portion of that consolidated net operating loss carryover attributable to S3, to $105.

(B) *Reduction of remaining consolidated tax attributes*. Pursuant to paragraphs (a)(4) and (b)(8) of this section, S3's remaining $45 of excluded COD income reduces the remaining consolidated tax attributes in the P1 group. In particular, the remaining $45 consolidated net operating loss for Year 2 is reduced by an additional $45 to $0.

(C) *Basis Adjustments*. For purposes of computing P1's gain or loss on the sale of the S1 stock in Year 3, P1's basis in its S1 stock will reflect a net positive adjustment of $40, which is the excess of the amount of S3's excluded COD income that is applied to reduce attributes ($65) over the reduction of S1's and S3's attributes in respect of such excluded COD income ($25).

Example 7. (i) *Facts*. P is the common parent of a consolidated group that includes subsidiaries S1 and S2. P owns 100 percent of the stock of S1, and S1 owns 100 percent of the stock of S2. None of P, S1, or S2 has a separate return limitation year prior to Year 1. In Year 1, the P group sustained a $50 consolidated net operating loss. Under the principles of §1.1502–21(b)(2)(iv), of that amount, $10 was attributable to P, $20 was attributable to S1, and $20 was attributable to S2. On January 1 of Year 2, S1 realized $55 of excluded COD income from the discharge of non-intercompany indebtedness. On June 30 of Year 2, P transferred all of its assets to S1 in a transaction to which section 381(a) applied. As a result of that transaction, pursuant to §1.1502–75(d)(2)(ii), S1 succeeded P as the common parent of the group. Pursuant to §1.1502–75(d)(2)(iii), S1's taxable year closed on the date of the acquisition. However, P's taxable year did not close. On the consolidated return for Year 2, the group sustained a $50 consolidated net operating loss. Under the principles of §1.1502–21(b)(2)(iv), of that amount, $10 was attributable to S1 for its taxable year that ended on June 30, $15 was attributable to S1 as the successor of P, and $25 was attributable to S2.

(ii) *Analysis*. Pursuant to paragraph (a)(2) of this section, the tax attributes attributable to S1 must first be reduced to take into account its excluded COD income in the amount of $55. For this purpose, S1's attributes that remain after the determination of tax for the group for Year 2 are subject to reduction. Pursuant to section 108(b)(2)(A) and paragraph (a) of this section, the net operating loss and the net operating loss carryover attributable to S1 under the principles of §1.1502–21(b)(2)(iv) are reduced. Accordingly, the consolidated net operating loss for Year 2 is reduced by $25, the portion of the consolidated net operating loss for Year 2 attributable to S1, to $25. Then, the consolidated net operating loss carryover from Year 1 is reduced by $30, the portion of that consolidated net operating loss carryover attributable to S1 (which includes the portion attributable to P), to $20.

(d) *Effective dates*. This section applies to discharges of indebtedness that occur after March 21, 2005. Groups, however, may apply this section in whole, but not in part, to discharges of indebtedness that occur on or before March 21, 2005, and after August 29, 2003. For discharges of indebtedness occurring on or before March 21, 2005, and after August 29, 2003, with respect to which a group chooses not to apply this section, see §1.1502–28T as contained in 26 CFR part 1 revised as of April 1, 2004. Furthermore, groups may apply paragraph (b)(4) of this section to discharges of indebtedness that occur on or before August 29, 2003, in cases in which section 1017(b)(3)(D) was applied. Paragraph (b)(5)(i) of this section and the last sentence of paragraph (b)(5)(ii) of this section applies to transactions

occurring in consolidated return years beginning on or after December 24, 2008.

[T.D. 9192, 70 FR 14404, Mar. 22, 2005, as amended by T.D. 9442, 73 FR 79334, Dec. 29, 2008]

BASIS, STOCK OWNERSHIP, AND EARNINGS AND PROFITS RULES

§ 1.1502–30 Stock basis after certain triangular reorganizations.

(a) *Scope*. This section provides rules for determining the basis of the stock of an acquiring corporation as a result of a triangular reorganization. The definitions and nomenclature contained in § 1.358–6 apply to this section.

(b) *General rules*—(1) *Forward triangular merger, triangular C reorganization, or triangular B reorganization*. *P* adjusts its basis in the stock of S as a result of a forward triangular merger, triangular C reorganization, or triangular B reorganization under § 1.358–6(c) and (d), except that § 1.358–6 (c)(1)(ii) and (d)(2) do not apply. Instead, *P* adjusts such basis by taking into account the full amount of—

(i) *T* liabilities assumed by *S* or the amount of liabilities to which the *T* assets acquired by *S* are subject, and

(ii) The fair market value of any consideration not provided by *P* pursuant to the plan of reorganization.

(2) *Reverse triangular merger*. If *P* adjusts its basis in the *T* stock acquired as a result of a reverse triangular merger under § 1.358–6 (c)(2)(i) and (d), § 1.358–6 (c)(1)(ii) and (d)(2) do not apply. Instead, *P* adjusts such basis by taking into account the full amount of—

(i) *T* liabilities deemed assumed by *S* or the amount of liabilities to which the *T* assets deemed acquired by *S* are subject, and

(ii) The fair market value of any consideration not provided by *P* pursuant to the plan of reorganization.

(3) *Excess loss accounts*. Negative adjustments under this section may exceed *P*'s basis in its *S* or *T* stock. The resulting negative amount is *P*'s excess loss account in its *S* or *T* stock. See § 1.1502–19 for rules treating excess loss accounts as negative basis, and treating references to stock basis as including references to excess loss accounts.

(4) *Application of other rules of law*. If a transaction otherwise subject to this section is also a group structure change subject to § 1.1502–31, the provisions of § 1.1502–31 and not this section apply to determine stock basis. See § 1.1502–80(a) regarding the general applicability of other rules of law and a limitation on duplicative adjustments. See § 1.1502–80(d) for the non-application of section 357(c) to P.

(5) *Examples*. The rules of this paragraph (b) are illustrated by the following examples. For purposes of these examples, *P*, *S*, and *T* are domestic corporations, *P* and *S* file consolidated returns, *P* owns all of the only class of *S* stock, the *P* stock exchanged in the transaction satisfies the requirements of the applicable triangular reorganization provisions, the facts set forth the only corporate activity, and tax liabilities are disregarded.

Example 1. Liabilities. (a) *Facts*. *T* has assets with an aggregate basis of $60 and fair market value of $100. *T*'s assets are subject to $70 of liabilities. Pursuant to a plan, *P* forms *S* with $5 of cash (which S retains), and *T* merges into *S*. In the merger, the *T* shareholders receive *P* stock worth $30 in exchange for their *T* stock. The transaction is a reorganization to which sections 368 (a)(1)(A) and (a)(2)(D) apply.

(b) *Basis adjustment*. Under § 1.358–6, *P* adjusts its $5 basis in the *S* stock as if *P* had acquired the *T* assets with a carryover basis under section 362 and transferred these assets to *S* in a transaction in which *P* determines its basis in the *S* stock under section 358. Under the rules of this section, the limitation described in § 1.358–6(c)(1)(ii) does not apply. Thus, *P* adjusts its basis in the *S* stock by –$10 (the aggregate adjusted basis of *T*'s assets decreased by the amount of liabilities to which the *T* assets are subject). Consequently, as a result of the reorganization, *P* has an excess loss account of $5 in its *S* stock.

Example 2. Consideration not provided by P. (a) *Facts*. *T* has assets with an aggregate basis of $10 and fair market value of $100 and no liabilities. *S* is an operating company with substantial assets that has been in existence for several years. *P* has a $5 basis in its *S* stock. Pursuant to a plan, *T* merges into *S* and the *T* shareholders receive $70 of *P* stock provided by *P* pursuant to the plan of reorganization and $30 of cash provided by *S* in exchange for their *T* stock. The transaction is a reorganization to which sections 368 (a)(1)(A) and (a)(2)(D) apply.

(b) *Basis adjustment*. Under §1.358–6, *P* adjusts its $5 basis in the *S* stock as if *P* had acquired the *T* assets with a carryover basis under section 362 and transferred these assets to *S* in a transaction in which *P* determines its basis in the *S* stock under section 358. Under the rules of this section, the limitation described in §1.358–6(d)(2) does not apply. Thus, *P* adjusts its basis in the *S* stock by –$20 (the aggregate adjusted basis of *T*'s assets decreased by the fair market value of the consideration provided by *S*). As a result of the reorganization, *P* has an excess loss account of $15 in its *S* stock.

(c) *Appreciated asset*. The facts are the same as in paragraph (a) of this *Example 2*, except that in the reorganization *S* provides an asset with a $20 adjusted basis and $30 fair market value instead of $30 cash. The basis is adjusted in the same manner as in paragraph (b) of this *Example 2*. In addition, because *S* recognizes a $10 gain from the asset under section 1001, *P*'s basis in its *S* stock is increased under §1.1502–32(b) by *S*'s $10 gain. Consequently, as a result of the reorganization, *P* has an excess loss account of $5 in its *S* stock. (The results would be the same if the appreciated asset provided by *S* was *P* stock with respect to which *S* recognized gain. See §1.1032–2(c)).

Example 3. Reverse triangular merger. (a) *Facts*. *T* has assets with an aggregate basis of $60 and fair market value of $100. *T*'s assets are subject to $70 of liabilities. *P* owns all of the only class of *S* stock. *P* has a $5 basis in its *S* stock. Pursuant to a plan, *S* merges into *T* with *T* surviving. In the merger, the *T* shareholders exchange their *T* stock for $2 cash from *P* and $28 worth of *P* stock provided by *P* pursuant to the plan. The transaction is a reorganization to which sections 368 (a)(1)(A) and (a)(2)(E) apply.

(b) *Basis adjustment*. Under §1.358–6, *P*'s basis in the *T* stock acquired equals its $5 basis in its *S* stock immediately before the transaction adjusted by the $60 basis in the *T* assets deemed transferred, and the $70 of liabilities to which the *T* assets are subject. Under the rules of this section, the limitation described in §1.358–6(c)(1)(ii) does not apply. Consequently, *P* has an excess loss account of $5 in its *T* stock as a result of the transaction.

(c) *Effective/applicability date*. This section applies to reorganizations occurring on or after December 21, 1995. However, paragraph (b)(4) of this section applies to reorganizations occurring on or after September 17, 2008.

[T.D. 8648, 60 FR 66082, Dec. 21, 1995, as amended by T.D. 9424, 73 FR 53949, Sept. 17, 2008]

§ 1.1502–31 Stock basis after a group structure change.

(a) *In general*—(1) *Overview*. If one corporation (P) succeeds another corporation (T) under the principles of §1.1502–75(d) (2) or (3) as the common parent of a consolidated group in a group structure change, the basis of members in the stock of the former common parent (or the stock of a successor) is adjusted or determined under this section. See §1.1502–33(f)(1) for the definition of group structure change. For example, if P owns all of the stock of another corporation (S), and T merges into S in a group structure change that is a reorganization described in section 368(a)(2)(D) in which P becomes the common parent of the T group, P's basis in S's stock must be adjusted to reflect the change in S's assets and liabilities. The rules of this section coordinate with the earnings and profits adjustments required under §1.1502–33(f)(1), generally conforming the results of transactions in which the T group continues under §1.1502–75 with P as the common parent. By preserving in P the relationship between T's earnings and profits and asset basis, these adjustments limit possible distortions under section 1502 (e.g., in the deconsolidation rules for earnings and profits under §1.1502–33(e), and the continued filing requirements under §1.1502–75(a)). This section applies whether or not T continues to exist after the group structure change.

(2) *Application of other rules of law*. If a transaction subject to this section is also a triangular reorganization otherwise subject to §1.1502–30, the provisions of this section and not those of §1.1502–30 apply to determine stock basis. See §1.1502–80(a) regarding the general applicability of other rules of law and a limitation on duplicative adjustments.

(b) *General rules*. Except as otherwise provided in this section—

(1) *Asset acquisitions*. If a corporation acquires the former common parent's assets (and any liabilities assumed or to which the assets are subject) in a group structure change, the basis of members in the stock of the acquiring corporation is adjusted immediately

after the group structure change to reflect the acquiring corporation's allocable share of the former common parent's net asset basis as determined under paragraph (c) of this section. For example, if S acquires all of T's assets in a group structure change that is a reorganization described in section 368(a)(2)(D), P's basis in S's stock is adjusted to reflect T's net asset basis. If P owned some of T's stock before the group structure change, the results would be the same because P's basis in the T stock is not taken into account in determining P's basis in S's stock. If T's net asset basis is a negative amount, it reduces P's basis in S's stock and, if the reduction exceeds P's basis in S's stock, the excess is P's excess loss account in S's stock. See §1.1502–19 for rules treating P's excess loss account as negative basis, and treating a reference to P's basis in S's stock as including an excess loss account.

(2) *Stock acquisitions.* If a corporation acquires stock of the former common parent in a group structure change, the basis of the members in the former common parent's stock immediately after the group structure change (including any stock of the former common parent owned before the group structure change) that is, or would otherwise be, transferred basis property is redetermined in accordance with the results for an asset acquisition described in paragraph (b)(1) of this section. For example, if all of T's stock is contributed to P in a group structure change to which section 351 applies, P's basis in T's stock is T's net asset basis, rather than the amount determined under section 362. Similarly, if S merges into T in a group structure change described in section 368(a)(2)(E) and P acquires all of the T stock, P's basis in T's stock is the basis that P would have in S's stock under paragraph (b)(1) of this section if T had merged into S in a group structure change described in section 368(a)(2)(D).

(c) *Net asset basis.* The former common parent's net asset basis is the basis it would have in the stock of a newly formed subsidiary, if—

(1) The former common parent transferred its assets (and any liabilities assumed or to which the assets are subject) to the subsidiary in a transaction to which section 351 applies;

(2) The former common parent and the subsidiary were members of the same consolidated group (see §1.1502–80(d) for the non-application of section 357(c) to the transfer); and

(3) The asset basis taken into account is each asset's basis immediately after the group structure change (e.g., taking into account any income or gain recognized in the group structure change and reflected in the asset's basis).

(d) *Additional adjustments.* In addition to the adjustments in paragraph (b) of this section, the following adjustments are made:

(1) *Consideration not provided by P.* The basis is reduced to reflect the fair market value of any consideration not provided by the member. For example, if S acquires T's assets in a group structure change described in section 368(a)(2)(D), and S provides an appreciated asset (e.g., stock of P) as partial consideration in the transaction, P's basis in S's stock is reduced by the fair market value of the asset.

(2) *Allocable share*—(i) *Asset acquisitions.* If a corporation receives less than all of the former common parent's assets and liabilities in the group structure change, the former common parent's net asset basis taken into account under paragraph (b)(1) of this section is adjusted accordingly.

(ii) *Stock acquisitions.* If less than all of the former common parent's stock is subject to the redetermination described in paragraph (b)(2) of this section, the percentage of the former common parent's net asset basis taken into account in the redetermination equals the percentage (by fair market value) of the former common parent's stock subject to the redetermination. For example, if P owns less than all of the former common parent's stock immediately after the group structure change and such stock would otherwise be transferred basis property, only an allocable part of the basis determined under this section is reflected in the shares owned by P (and the amount allocable to shares owned by nonmembers has no effect on the basis of their shares). Alternatively, if P acquired 10 percent of the former common parent's

stock in a transaction in which the stock basis was determined by P's cost, and P later acquires the remaining 90 percent of the former common parent's stock in a separate transaction that is described in paragraph (b)(2) of this section, P retains its cost basis in its original stock and the basis of P's newly acquired shares reflects only an allocable part of the former common parent's net asset basis.

(3) *Allocation among shares of stock.* The basis determined under this section is allocated among shares under the principles of section 358. For example, if P owns multiple classes of the former common parent's stock immediately after the group structure change, only an allocable part of the basis determined under this section is reflected in the basis of each share. See §1.1502–19(d), for special allocations with respect to excess loss accounts.

(4) *Higher-tier members.* To the extent that the former common parent is owned by members other than the new common parent, the basis of members in the stock of all subsidiaries owning, directly or indirectly, in whole or in part, an interest in the former common parent's assets or liabilities is adjusted in accordance with the principles of this section. The adjustments are applied in the order of the tiers, from the lowest to the highest.

(e) *Waiver of loss carryovers of former common parent*—(1) *General rule.* An irrevocable election may be made to treat all or any portion of a loss carryover attributable to the common parent as expiring for all Federal income tax purposes immediately before the group structure change. Thus, if the loss carryover is treated as expiring under the election, it will not result in a negative adjustment to the basis of P's stock under §1.1502–32(b).

(2) *Election.* The election described in paragraph (e)(1) of this section must be made in a separate statement entitled, ''ELECTION TO TREAT LOSS CARRYOVER AS EXPIRING UNDER §1.1502–31(e).'' The election must be filed by including the statement on or with the consolidated group's income tax return for the year that includes the group structure change. The statement must identify the amount of each loss carryover deemed to expire (or the amount of each loss carryover deemed not to expire, with any balance of any loss carryovers being deemed to expire).

(f) *Predecessors and successors.* For purposes of this section, any reference to a corporation includes a reference to a successor or predecessor as the context may require. See §1.1502–32(f) for definitions of predecessor and successor.

(g) *Examples.* For purposes of the examples in this section, unless otherwise stated, all corporations have only one class of stock outstanding, the tax year of all persons is the calendar year, all persons use the accrual method of accounting, the facts set forth the only corporate activity, all transactions are between unrelated persons, and tax liabilities are disregarded. The principles of this section are illustrated by the following examples:

Example 1. Forward triangular merger. (i) *Facts.* P is the common parent of one group and T is the common parent of another. T has assets with an aggregate basis of $60 and fair market value of $100 and no liabilities. T's shareholders have an aggregate basis of $50 in T's stock. In Year 1, pursuant to a plan, P forms S and T merges into S with the T shareholders receiving $100 of P stock in exchange for their T stock. The transaction is a reorganization described in section 368(a)(2)(D). The transaction is also a reverse acquisition under §1.1502–75(d)(3) because the T shareholders, as a result of owning T's stock, own more than 50% of the value of P's stock immediately after the transaction. Thus, the transaction is a group structure change under §1.1502–33(f)(1), and P's earnings and profits are adjusted to reflect T's earnings and profits immediately before T ceases to be the common parent of the T group.

(ii) *Analysis.* Under paragraph (b)(1) of this section, P's basis in S's stock is adjusted to reflect T's net asset basis. Under paragraph (c) of this section, T's net asset basis is $60, the basis T would have in the stock of a subsidiary under section 358 if T had transferred all of its assets and liabilities to the subsidiary in a transaction to which section 351 applies. Thus, P has a $60 basis in S's stock.

(iii) *Pre-existing S.* The facts are the same as in paragraph (i) of this *Example 1*, except that P has owned the stock of S for several years and P has a $50 basis in the S stock before the merger with T. Under paragraph (b)(1) of this section, P's $50 basis in S's stock is adjusted to reflect T's net asset basis. Thus, P's basis in S's stock is $110 ($50 plus $60).

(iv) *Excess loss account included in former common parent's net asset basis.* The facts are the same as in paragraph (i) of this *Example 1*, except that T has two assets, an operating asset with an $80 basis and $90 fair market value, and stock of a subsidiary with a $20 excess loss account and $10 fair market value. Under paragraph (c) of this section, T's net asset basis is $60 ($80 minus $20). *See* sections 351 and 358, and §1.1502–19. Consequently, P has a $60 basis in S's stock. Under section 362 and §1.1502–19, S has an $80 basis in the operating asset and a $20 excess loss account in the stock of the subsidiary.

(v) *Liabilities in excess of basis.* The facts are the same as in paragraph (i) of this *Example 1*, except that T's assets have a fair market value of $170 (and $60 basis) and are subject to $70 of liabilities. Under paragraph (c) of this section, T's net asset basis is negative $10 ($60 minus $70). *See* sections 351 and 358, and §§1.1502–19 and 1.1502–80(d). Thus, P has a $10 excess loss account in S's stock. Under section 362, S has a $60 basis in its assets (which are subject to $70 of liabilities). (Under paragraph (a)(2) of this section, because the liabilities are taken into account in determining net asset basis under paragraph (c) of this section, the liabilities are not also taken into account as consideration not provided by P under paragraph (d)(1) of this section.)

(vi) *Consideration provided by S.* The facts are the same as in paragraph (i) of this *Example 1*, except that P forms S with a $100 contribution at the beginning of Year 1, and during Year 6, pursuant to a plan, S purchases $100 of P stock and T merges into S with the T shareholders receiving P stock in exchange for their T stock. Under paragraph (b)(1) of this section, P's $100 basis in S's stock is increased by $60 to reflect T's net asset basis. Under paragraph (d)(1) of this section, P's basis in S's stock is decreased by $100 (the fair market value of the P stock) because the P stock purchased by S and used in the transaction is consideration not provided by P.

(vii) *Appreciated asset provided by S.* The facts are the same as in paragraph (i) of this *Example 1*, except that P has owned the stock of S for several years, and the shareholders of T receive $60 of P stock and an asset of S with a $30 adjusted basis and $40 fair market value. S recognizes a $10 gain from the asset under section 1001. Under paragraph (b)(1) of this section, P's basis in S's stock is increased by $60 to reflect T's net asset basis. Under paragraph (d)(1) of this section, P's basis in S's stock is decreased by $40 (the fair market value of the asset provided by S). In addition, P's basis in S's stock is increased under §1.1502–32(b) by S's $10 gain.

(viii) *Depreciated asset provided by S.* The facts are the same as in paragraph (i) of this *Example 1*, except that P has owned the stock of S for several years, and the shareholders of T receive $60 of P stock and an asset of S with a $50 adjusted basis and $40 fair market value. S recognizes a $10 loss from the asset under section 1001. Under paragraph (b)(1) of this section, P's basis in S's stock is increased by $60 to reflect T's net asset basis. Under paragraph (d)(1) of this section, P's basis in S's stock is decreased by $40 (the fair market value of the asset provided by S). In addition, S's $10 loss is taken into account under §1.1502–32(b) in determining P's basis adjustments under that section.

Example 2. Stock acquisition. (i) *Facts.* P is the common parent of one group and T is the common parent of another. T has assets with an aggregate basis of $60 and fair market value of $100 and no liabilities. T's shareholders have an aggregate basis of $50 in T's stock. Pursuant to a plan, P forms S and S acquires all of T's stock in exchange for P stock in a transaction described in section 368(a)(1)(B). The transaction is also a reverse acquisition under §1.1502–75(d)(3). Thus, the transaction is a group structure change under §1.1502–33(f)(1), and the earnings and profits of P and S are adjusted to reflect T's earnings and profits immediately before T ceases to be the common parent of the T group.

(ii) *Analysis.* Under paragraph (d)(4) of this section, although S is not the new common parent of the T group, adjustments must be made to S's basis in T's stock in accordance with the principles of this section. Although S's basis in T's stock would ordinarily be determined under section 362 by reference to the basis of T's shareholders in T's stock immediately before the group structure change, under the principles of paragraph (b)(2) of this section, S's basis in T's stock is determined by reference to T's net asset basis. Thus, S's basis in T's stock is $60.

(iii) *Higher-tier adjustments.* Under paragraph (d)(4) of this section, P's basis in S's stock is increased by $60 (to be consistent with the adjustment to S's basis in T's stock).

(iv) *Cross ownership.* The facts are the same as in paragraph (i) of this *Example 2*, except S purchased 10% of T's stock from an unrelated person for cash. In an unrelated transaction, S acquires the remaining 90% of T's stock in exchange for P stock. S's basis in the initial 10% of T's stock is not redetermined under this section. However, S's basis in the additional 90% of T's stock is redetermined under this section. S's basis in that stock is adjusted to $54 (90% of T's net asset basis).

(v) *Allocable share.* The facts are the same as in paragraph (i) of this *Example 2*, except that P owns only 90% of S's stock immediately after the group structure change. S's basis in T's stock is the same as in paragraph (ii) of this *Example 2*. Under paragraph (d)(2) of this section, P's basis in its S stock

is increased by $54 (90% of S's $60 adjustment).

Example 3. Taxable stock acquisition. (i) *Facts.* P is the common parent of one group and T is the common parent of another. T has assets with an aggregate basis of $60 and fair market value of $100 and no liabilities. T's shareholders have an aggregate basis of $50 in T's stock. Pursuant to a plan, P acquires all of T's stock in exchange for $70 of P's stock and $30 in a transaction that is a group structure change under §1.1502–33(f)(1). P's acquired T stock is not transferred basis property. (Because of P's use of cash, the acquisition is not a transaction described in section 368(a)(1)(B).)

(ii) *Analysis.* The rules of this section do not apply to determine P's basis in T's stock. Therefore, P's basis in T's stock is $100.

(h) *Effective/applicability dates*—(1) *General rule.* This section applies to group structure changes that occur after April 26, 2004. However, a group may apply this section to group structure changes that occurred on or before April 26, 2004, and in consolidated return years beginning on or after January 1, 1995. In addition, paragraph (a)(2) of this section applies to group structure changes that occurred on or after September 17, 2008. Paragraph (e)(2) of this section applies to any original consolidated Federal income tax return due (without extensions) after June 14, 2007. For original consolidated Federal income tax returns due (without extensions) after May 30, 2006, and on or before June 14, 2007, see §1.1502–31T as contained in 26 CFR part 1 in effect on April 1, 2007. For original consolidated Federal income tax returns due (without extensions) on or before May 30, 2006, see §1.1502–31 as contained in 26 CFR part 1 in effect on April 1, 2006.

(2) *Prior law.* For group structure changes that occur on or before April 26, 2004, and in consolidated return years beginning on or after January 1, 1995, with respect to which the group does not elect to apply the provisions of this section, see §1.1502–31 as contained in the 26 CFR part 1 edition revised as of April 1, 2003. For group structure changes that occur in consolidated return years beginning before January 1, 1995, see §1.1502–31T as contained in the 26 CFR part 1 edition revised as of April 1, 1994.

[T.D. 8560, 59 FR 41683, Aug. 15, 1994, as amended by T.D. 9122, 69 FR 22400, Apr. 26, 2004; T.D. 9264, 71 FR 30602, May 30, 2006; T.D. 9329, 72 FR 32804, June 14, 2007; T.D. 9424, 73 FR 53949, Sept. 17, 2008]

§1.1502–32 Investment adjustments.

(a) *In general*—(1) *Purpose.* This section provides rules for adjusting the basis of the stock of a subsidiary (S) owned by another member (M). These rules modify the determination of M's basis in S's stock under applicable rules of law by adjusting M's basis to reflect S's distributions and S's items of income, gain, deduction, and loss taken into account for the period that S is a member of the consolidated group. The purpose of the adjustments is to treat M and S as a single entity so that consolidated taxable income reflects the group's income. For example, if M forms S with a $100 contribution, and S takes into account $10 of income, M's $100 basis in S's stock under section 358 is increased by $10 under this section to prevent S's income from being taken into account a second time on M's disposition of S's stock. Comparable adjustments are made for tax-exempt income and noncapital, nondeductible expenses that S takes into account, to preserve their treatment under the Internal Revenue Code.

(2) *Application of other rules of law, duplicative adjustments.* See §1.1502–80(a) regarding the general applicability of other rules of law and a limitation on duplicative adjustments. The rules of this section are in addition to other rules of law. See, e.g., section 358 (basis determinations for distributees), section 1016 (adjustments to basis), §1.1502–11(b) (limitations on the use of losses), §1.1502–19 (treatment of excess loss accounts), §1.1502–31 (basis after a group structure change), and §1.1502–35 (additional rules relating to stock loss, including losses attributable to worthlessness and certain dispositions not followed by a separate return year). M's basis in S's stock must not be adjusted under this section and other rules of law in a manner that has the effect of duplicating an adjustment.

(3) *Overview*—(i) *In general.* The amount of the stock basis adjustments

and their timing are determined under paragraph (b) of this section. Under paragraph (c) of this section, the amount of the adjustment is allocated among the shares of S's stock. Paragraphs (d) through (g) of this section provide definitions, an anti-avoidance rule, successor rules, and recordkeeping requirements.

(ii) *Excess loss account.* Negative adjustments under this section may exceed M's basis in S's stock. The resulting negative amount is M's excess loss account in S's stock. See §1.1502–19 for rules treating excess loss accounts as negative basis, and treating references to stock basis as including references to excess loss accounts.

(iii) *Tiering up of adjustments.* The adjustments to S's stock under this section are taken into account in determining adjustments to higher-tier stock. The adjustments are applied in the order of the tiers, from the lowest to the highest. For example, if M is also a subsidiary, M's adjustment to S's stock is taken into account in determining the adjustments to stock of M owned by other members.

(b) *Stock basis adjustments*—(1) *Timing of adjustments*—(i) *In general.* Adjustments under this section are made as of the close of each consolidated return year, and as of any other time (an interim adjustment) if a determination at that time is necessary to determine a tax liability of any person. For example, adjustments are made as of M's sale of S's stock in order to measure M's gain or loss from the sale, and if M's interest in S's stock is not uniform throughout the year (e.g., because M disposes of a portion of its S stock, or S issues additional shares to another person), the adjustments under this section are made by taking into account the varying interests. An interim adjustment may be necessary even if tax liability is not affected until a later time. For example, if M sells only 50% of S's stock and S becomes a nonmember, adjustments must be made for the retained stock as of the disposition (whether or not M has an excess loss account in that stock). Similarly, if S liquidates during a consolidated return year, adjustments must be made as of the liquidation (even if the liquidation is tax free under section 332).

(ii) *Special rule for discharge of indebtedness income.* Adjustments under this section resulting from the realization of discharge of indebtedness income of a member that is excluded from gross income under section 108(a) (excluded COD income) and from the reduction of attributes in respect thereof pursuant to sections 108 and 1017 and §1.1502–28 (including reductions in the basis of property) when a member (the departing member) ceases to be a member of the group on or prior to the last day of the consolidated return year that includes the date the excluded COD income is realized are made immediately after the determination of tax for the group for the taxable year during which the excluded COD income is realized (and any prior years) and are effective immediately before the beginning of the taxable year of the departing member following the taxable year during which the excluded COD income is realized. Such adjustments when a corporation (the new member) is not a member of the group on the last day of the consolidated return year that includes the date the excluded COD income is realized but is a member of the group at the beginning of the following consolidated return year are also made immediately after the determination of tax for the group for the taxable year during which the excluded COD income is realized (and any prior years) and are effective immediately before the beginning of the taxable year of the new member following the taxable year during which the excluded COD income is realized. If the new member was a member of another group immediately before it became a member of the group, such adjustments are treated as occurring immediately after it ceases to be a member of the prior group.

(iii) *Allocation of items.* If §1.1502–76(b) applies to S for purposes of an adjustment before the close of the group's consolidated return year, the amount of the adjustment is determined under that section. If §1.1502–76(b) does not apply to the interim adjustment, the adjustment is determined under the principles of §1.1502–76(b), consistently applied, and ratable allocation under the principles of §1.1502–76(b)(2)(ii) or

(iii) may be used without filing an election under §1.1502–76(b)(2). The principles would apply, for example, if M becomes a nonmember but S remains a member.

(2) *Amount of adjustments.* M's basis in S's stock is increased by positive adjustments and decreased by negative adjustments under this paragraph (b)(2). The amount of the adjustment, determined as of the time of the adjustment, is the net amount of S's—

(i) Taxable income or loss;

(ii) Tax-exempt income;

(iii) Noncapital, nondeductible expenses; and

(iv) Distributions with respect to S's stock.

(3) *Operating rules.* For purposes of determining M's adjustments to the basis of S's stock under paragraph (b)(2) of this section—

(i) *Taxable income or loss.* S's taxable income or loss is consolidated taxable income (or loss) determined by including only S's items of income, gain, deduction, and loss taken into account in determining consolidated taxable income (or loss), treating S's deductions and losses as taken into account to the extent they are absorbed by S or any other member. For this purpose:

(A) To the extent that S's deduction or loss is absorbed in the year it arises or is carried forward and absorbed in a subsequent year (e.g., under section 172, 465, or 1212), the deduction or loss is taken into account under paragraph (b)(2) of this section in the year in which it is absorbed.

(B) To the extent that S's deduction or loss is carried back and absorbed in a prior year (whether consolidated or separate), the deduction or loss is taken into account under paragraph (b)(2) of this section in the year in which it arises and not in the year in which it is absorbed.

(ii) *Tax-exempt income*—(A) *In general.* S's tax-exempt income is its income and gain which is taken into account but permanently excluded from its gross income under applicable law, and which increases, directly or indirectly, the basis of its assets (or an equivalent amount). For example, S's dividend income to which §1.1502–13(f)(2)(ii) applies, and its interest excluded from gross income under section 103, are treated as tax-exempt income. However, S's income not recognized under section 1031 is not treated as tax- exempt income because the corresponding basis adjustments under section 1031(d) prevent S's nonrecognition from being permanent. Similarly, S's tax-exempt income does not include gain not recognized under section 332 from the liquidation of a lower-tier subsidiary, or not recognized under section 118 or section 351 from a transfer of assets to S.

(B) *Equivalent deductions.* To the extent that S's taxable income or gain is permanently offset by a deduction or loss that does not reduce, directly or indirectly, the basis of S's assets (or an equivalent amount), the income or gain is treated as tax-exempt income and is taken into account under paragraph (b)(3)(ii)(A) of this section. In addition, the income and the offsetting item are taken into account under paragraph (b)(3)(i) of this section. For example, if S receives a $100 dividend with respect to which a $70 dividends received deduction is allowed under section 243, $70 of the dividend is treated as tax-exempt income. Accordingly, M's basis in S's stock increases by $100 because the $100 dividend and $70 deduction are taken into account under paragraph (b)(3)(i) of this section (resulting in $30 of the increase), and $70 of the dividend is also taken into account under paragraph (b)(3)(ii)(A) of this section as tax-exempt income (resulting in $70 of the increase). (See paragraph (b)(3)(iii) of this section if there is a corresponding negative adjustment under section 1059.) Similarly, income from mineral properties is treated as tax-exempt income to the extent it is offset by deductions for depletion in excess of the basis of the property.

(C) *Discharge of indebtedness income*—(*1*) *In general.* Excluded COD income is treated as tax-exempt income only to the extent the discharge is applied to reduce tax attributes attributable to any member of the group under section 108, section 1017 or §1.1502–28. However, if S is treated as realizing excluded COD income pursuant to §1.1502–28(a)(3), S shall not be treated as realizing excluded COD income for purposes of the preceding sentence.

(*2*) *Expired loss carryovers.* If the amount of the discharge exceeds the amount of the attribute reduction under sections 108 and 1017, and § 1.1502–28, the excess nevertheless is treated as applied to reduce tax attributes to the extent a loss carryover attributable to S expired without tax benefit, the expiration was taken into account as a noncapital, nondeductible expense under paragraph (b)(3)(iii) of this section, and the loss carryover would have been reduced had it not expired.

(D) *Basis shifts.* An increase in the basis of S's assets (or an equivalent as described in paragraph (b)(3)(iv)(B) of this section) is treated as tax-exempt income to the extent that the increase is not otherwise taken into account in determining stock basis, it corresponds to a negative adjustment that is taken into account by the group under this paragraph (b) (or incurred by the common parent), and it has the effect (viewing the group in the aggregate) of a permanent recovery of the reduction. For example, S's basis increase under section 50(c)(2) is treated as tax-exempt income to the extent the preceding basis reduction under section 50(c)(1) is reflected in the basis of a member's stock. On the other hand, if S increases the basis of an asset as the result of an accounting method change, and the related positive section 481(a) adjustment is taken into account over time, the basis increase is not treated as tax-exempt income.

(iii) *Noncapital, nondeductible expenses*—(A) *In general.* S's noncapital, nondeductible expenses are its deductions and losses that are taken into account but permanently disallowed or eliminated under applicable law in determining its taxable income or loss, and that decrease, directly or indirectly, the basis of its assets (or an equivalent amount). For example, S's Federal taxes described in section 275 and loss not recognized under section 311(a) are noncapital, nondeductible expenses. Similarly, if a loss carryover (e.g., under section 172 or 1212) attributable to S expires or is reduced under section 108(b) and § 1.1502–28, it becomes a noncapital, nondeductible expense at the close of the last tax year to which it may be carried. However, when a tax attribute attributable to S is reduced as required pursuant to § 1.1502–28(a)(3), the reduction of the tax attribute is not treated as a noncapital, nondeductible expense of S. Finally, if S sells and repurchases a security subject to section 1091, the disallowed loss is not a noncapital, nondeductible expense because the corresponding basis adjustments under section 1091(d) prevent the disallowance from being permanent.

(B) *Nondeductible basis recovery.* Any other decrease in the basis of S's assets (or an equivalent as described in paragraph (b)(3)(iv)(B) of this section) may be a noncapital, nondeductible expense to the extent that the decrease is not otherwise taken into account in determining stock basis and is permanently eliminated for purposes of determining S's taxable income or loss. Whether a decrease is so treated is determined by taking into account both the purposes of the Code or regulatory provision resulting in the decrease and the purposes of this section. For example, S's noncapital, nondeductible expenses include any basis reduction under section 50(c)(1), section 1017, section 1059, § 1.1502–35(b) or (f)(2). Also included as a noncapital, nondeductible expense is the amount of any gross-up for taxes paid by another taxpayer that S is treated as having paid (e.g., income included under section 78, or the portion of an undistributed capital gain dividend that is treated as tax deemed to have been paid by a shareholder under section 852(b)(3)(D)(ii), whether or not any corresponding amount is claimed as a tax credit). In contrast, a decrease generally is not a noncapital, nondeductible expense if it results because S redeems stock in a transaction to which section 302(a) applies, S receives assets in a liquidation to which section 332 applies and its basis in the assets is less than its basis in the stock canceled, or S distributes the stock of a subsidiary in a distribution to which section 355 applies.

(iv) *Special rules for tax-exempt income and noncapital, nondeductible expenses.* For purposes of paragraphs (b)(3)(ii) and (iii) of this section:

(A) *Treatment as permanent.* An amount is permanently excluded from gross income, or permanently disallowed or eliminated, if it is so treated by S even though another person

may take a corresponding amount into account. For example, if S sells property to a nonmember at a loss that is disallowed under section 267(a), S's loss is a noncapital, nondeductible expense even though under section 267(d) the nonmember may treat a corresponding amount of gain as not recognized. (If the nonmember is a subsidiary in another consolidated group, its gain not recognized under section 267(d) is tax-exempt income under paragraph (b)(3)(ii)(A) of this section.)

(B) *Amounts equivalent to basis and adjustments to basis.* Amounts equivalent to basis include the amount of money, the amount of a loss carryover, and the amount of an adjustment to gain or loss under section 475(a) for securities described in section 475(a)(2). An equivalent to a basis increase includes a decrease in an excess loss account, and an equivalent to a basis decrease includes the denial of basis for taxable income.

(C) *Timing.* An amount is taken into account in the year in which it would be taken into account under paragraph (b)(3)(i) of this section if it were subject to Federal income taxation.

(D) *Tax sharing agreements.* Taxes are taken into account by applying the principles of section 1552 and the percentage method under §1.1502–33(d)(3) (and by assuming a 100% allocation of any decreased tax liability). The treatment of amounts allocated under this paragraph (b)(3)(iv)(D) is analogous to the treatment of allocations under §1.1552–1(b)(2). For example, if one member owes a payment to a second member, the first member is treated as indebted to the second member. The right to receive payment is treated as a positive adjustment under paragraph (b)(3)(ii) of this section, and the obligation to make payment is treated as a negative adjustment under paragraph (b)(3)(iii) of this section. If the obligation is not paid, the amount not paid generally is treated as a distribution, contribution, or both, depending on the relationship between the members.

(v) *Distributions.* Distributions taken into account under paragraph (b)(2) of this section are distributions with respect to S's stock to which section 301 applies and all other distributions treated as dividends (e.g., under section 356(a)(2)). See §1.1502–13(f)(2)(iv) for taking into account distributions to which section 301 applies (but not other distributions treated as dividends) under the entitlement rule.

(4) *Waiver of loss carryovers from separate return limitation years*—(i) *General rule.* If S has a loss carryover from a separate return limitation year when it becomes a member of a consolidated group, the group may make an irrevocable election to treat all or any portion of the loss carryover as expiring for all Federal income tax purposes immediately before S becomes a member of the consolidated group (deemed expiration). If S was a member of another group immediately before it became a member of the consolidated group, the expiration is also treated as occurring immediately after it ceases to be a member of the prior group.

(ii) *Stock basis adjustments from a waiver*—(A) *Qualifying transactions.* If S becomes a member of the consolidated group in a qualifying cost basis transaction and an election under this paragraph (b)(4) is made, the noncapital, nondeductible expense resulting from the deemed expiration does not result in a corresponding stock basis adjustment for any member under this section. A qualifying cost basis transaction is the purchase (i.e., a transaction in which basis is determined under section 1012) by members of the acquiring consolidated group (while they are members) in a 12-month period of an amount of S's stock satisfying the requirements of section 1504(a)(2).

(B) *Nonqualifying transactions.* If S becomes a member of the consolidated group other than in a qualifying cost basis transaction and an election under this paragraph (b)(4) is made, the basis of its stock that is owned by members immediately after it becomes a member is subject to reduction under the principles of this section to reflect the deemed expiration. The reduction occurs immediately before S becomes a member, but after it ceases to be a member of any prior group, and it therefore does not result in a corresponding stock basis adjustment for any higher-tier member of the transferring or acquiring consolidated group. Any basis reduction under this paragraph (b)(4)(ii)(B) is taken into account

in making determinations of basis under the Code with respect to S's stock (e.g., a determination under section 362 because the stock is acquired in a transaction described in section 368(a)(1)(B)), but it does not result in corresponding stock basis adjustments under this section for any higher-tier member. If the basis reduction exceeds the basis of S's stock, the excess is treated as an excess loss account to which the members owning S's stock succeed.

(C) *Higher-tier corporations.* If S becomes a member of the consolidated group as a result, in whole or in part, of a higher-tier corporation becoming a member (whether or not in a qualifying cost basis transaction), additional adjustments are required. The highest-tier corporation (T) whose becoming a member resulted in S becoming a member, and T's chain of lower-tier corporations that includes S, are subject to the adjustment. The deemed expiration of S's loss carryover that results in a negative adjustment for the first higher-tier corporation is treated as an expiring loss carryover of that higher-tier corporation for purposes of applying paragraph (b)(4)(ii)(B) of this section to that corporation. For example, if M purchases all of the stock of T, T owns all of the stock of T1, T1 owns all of the stock of S, S becomes a member as a result of T becoming a member, and the election under this paragraph (b)(4) is made, the basis of the S stock is reduced and the reduction tiers up to T1, T1 treats the negative adjustment to its basis in S's stock as an expiring loss carryover of T1, and T then adjusts its basis in T1's stock. In addition, if T becomes a member of the acquiring group in a transaction other than a qualifying cost basis transaction, the amount that tiers up to T also reduces the basis of its stock under paragraph (b)(4)(ii)(B) of this section (but the amount does not tier up to higher-tier members).

(iii) *Net asset basis limitation.* Basis reduced under this paragraph (b)(4) is restored before S becomes a member (and before the basis of S's stock is taken into account in determining basis under the Code) to the extent necessary to conform a share's basis to its allocable portion of net asset basis. In the case of higher-tier corporations under paragraph (b)(4)(ii)(C) of this section, the restoration does not tier up but is instead applied separately to each higher-tier corporation. For purposes of determining each corporation's net asset basis (including the basis of stock in lower-tier corporations), the restoration is applied in the order of tiers, from the lowest to the highest. For purposes of the restoration:

(A) A member's net asset basis is the positive or negative difference between the adjusted basis of its assets (and the amount of any of its loss carryovers that are not deemed to expire) and its liabilities. Appropriate adjustments must be made, for example, to disregard liabilities that subsequently will give rise to deductions (e.g., liabilities to which section 461(h) applies).

(B) Within a class of stock, each share has the same allocable portion of net asset basis. If there is more than one class of common stock, the net asset basis is allocated to each class by taking into account the terms of each class and all other facts and circumstances relating to the overall economic arrangement.

(iv) *Election.* The election described in paragraph (b)(4) of this section must be made in a separate statement entitled, ''ELECTION TO TREAT LOSS CARRYOVER OF [INSERT NAME AND EMPLOYER IDENTIFICATION NUMBER OF S] AS EXPIRING UNDER §1.1502–32(b)(4).'' The election must be filed by including a statement on or with the consolidated group's income tax return for the year S becomes a member. A separate statement must be made for each member whose loss carryover is deemed to expire. The statement must identify the amount of each loss carryover deemed to expire (or the amount of each loss carryover deemed not to expire, with any balance of any loss carryovers being deemed to expire) and the basis of any stock reduced as a result of the deemed expiration.

(v) *Special rule for loss carryovers of a subsidiary acquired in a transaction for which an election under §1.1502–20(i)(2) is made*—(A) *Expired losses.* Notwithstanding paragraph (b)(4)(iv) of this section, unless a group otherwise chooses, to the extent that S's loss

carryovers are increased by reason of an election under §1.1502–20(i)(2) and such loss carryovers expire or would have been properly used to offset income in a taxable year for which the refund of an overpayment is prevented by any law or rule of law as of the date the group files its original return for the taxable year in which S receives the notification described in §1.1502–20(i)(3)(iv) and at all times thereafter, the group will be deemed to have made an election under paragraph (b)(4) of this section to treat all of such loss carryovers as expiring for all Federal income tax purposes immediately before S became a member of the consolidated group. A group may choose not to apply the rule of the previous sentence to all of such loss carryovers of S by taking a position on an original or amended tax return for each relevant taxable year that is consistent with having made such choice.

(B) *Available losses*. Notwithstanding paragraph (b)(4)(iv) of this section, to the extent that S's loss carryovers are increased by reason of an election under §1.1502–20(i)(2) and such loss carryovers have not expired and would not have been properly used to offset income in a taxable year for which the refund of an overpayment is prevented by any law or rule of law as of the date the group files its original return for the taxable year in which S receives the notification described in §1.1502–20(i)(3)(iv) and at all times thereafter, the group may make an election under paragraph (b)(4) of this section to treat all or a portion of such loss carryovers as expiring for all Federal income tax purposes immediately before S became a member of the consolidated group. Such election must be filed with the group's original return for the taxable year in which S receives the notification described in §1.1502–20(i)(3)(iv).

(C) *Effective dates*. Paragraph (b)(4)(v) of this section is applicable on and after March 3, 2005. For prior periods, see §1.1502–32T(b)(4)(v) as contained in the 26 CFR part 1 in effect on March 2, 2005.

(vi) *Special rules in the case of certain transactions subject to §1.1502–35*. If a member of a consolidated group transfers stock of a subsidiary and such stock has a basis that exceeds its value immediately before such transfer or a subsidiary is deconsolidated and any stock of such subsidiary owned by members of the group immediately before such deconsolidation has a basis that exceeds its value, all members of the group are subject to the provisions of §1.1502–35(b), which generally require a redetermination of members' basis in all shares of subsidiary stock.

(vii) *Special rules for amending waiver of loss carryovers from separate return limitation year*—(A) *Waivers that increased allowable loss or reduced basis reduction required*. If, in connection with the acquisition of S, the group made an election pursuant to paragraph (b)(4) of this section to treat all or any portion of S's loss carryovers as expiring, and the prior group elected to determine the amount of the allowable loss or the basis reduction required with respect to the stock of S or a higher-tier corporation of S by applying the provisions described in §1.1502–20(i)(2)(i) or (ii), then the group may reduce the amount of any loss carryover deemed to expire (or increase the amount of any loss carryover deemed not to expire) as a result of the election made pursuant to paragraph (b)(4) of this section. The aggregate amount of loss carryovers that may be treated as not expiring as a result of amendments made pursuant to this paragraph (b)(4)(vii)(A) with respect to S and any higher- and lower-tier corporation of S may not exceed the amount described in §1.1502–20(c)(1)(iii) with respect to the acquired stock (computed without regard to the effect of the group's election or elections pursuant to paragraph (b)(4) of this section, but with regard to the effect of the prior group's election pursuant to §1.1502–20(g), if any, prior to the application of §1.1502–20(i)(3)). For purposes of determining the aggregate amount of loss carryovers that may be treated as not expiring as a result of amendments made pursuant to this paragraph (b)(4)(vii)(A) with respect to S and any higher- and lower-tier corporation of S, the group may rely on a written notification provided by the prior group. Nothing in this paragraph shall be construed as permitting a group to increase the amount of any loss carryover deemed to expire

(or reduce the amount of any loss carryover deemed not to expire) as a result of the election made pursuant to paragraph (b)(4) of this section.

(B) *Inadvertent waivers of loss carryovers previously subject to an election described in § 1.1502–20(g).* If, in connection with the acquisition of S, the group made an election pursuant to paragraph (b)(4) of this section to waive loss carryovers of S by identifying the amount of each loss carryover deemed not to expire, the prior group elected to determine the amount of the allowable loss or the basis reduction required with respect to the stock of S or a higher-tier corporation of S by applying the provisions described in § 1.1502–20(i)(2)(i) or (ii), and the amount of S's loss carryovers treated as reattributed to the prior group pursuant to the election described in § 1.1502–20(g) is reduced pursuant to § 1.1502–20(i)(3), then the group may amend its election made pursuant to paragraph (b)(4) of this section to provide that all or a portion of the loss carryovers of S that are treated as loss carryovers of S as a result of the prior group's election to apply the provisions described in § 1.1502–20(i)(2)(i) or (ii) are deemed not to expire. This paragraph (b)(4)(vii)(B), however, does not permit a group to reduce the amount of any loss carryover deemed not to expire as a result of the election made pursuant to paragraph (b)(4) of this section.

(C) *Time and manner of amending an election under § 1.1502–32(b)(4).* The amendment of an election made pursuant to paragraph (b)(4) of this section must be made in a statement entitled *Amendment of Election to Treat Loss Carryover as Expiring Under § 1.1502–32(b)(4) Pursuant to § 1.1502–32(b)(4)(vii).* The statement must be filed with or as part of any timely filed (including extensions) original return for the taxable year that includes August 26, 2004, or with or as part of an amended return filed before the date the original return for the taxable year that includes August 26, 2004, is due (with regard to extensions). A separate statement shall be filed for each election made pursuant to paragraph (b)(4) of this section that is being amended pursuant to this paragraph (b)(4)(vii). For purposes of making this statement, the group may rely on the statements set forth in a written notification provided by the prior group. The statement filed under this paragraph must include the following—

(*1*) The name and employer identification number (E.I.N.) of S;

(*2*) In the case of an amendment made pursuant to paragraph (b)(4)(vii)(A), a statement that the group has received a written notification from the prior group confirming that the group's prior election or elections pursuant to paragraph (b)(4) of this section had the effect of either increasing the prior group's allowable loss on the disposition of subsidiary stock or reducing the prior group's amount of basis reduction required;

(*3*) The amount of each loss carryover of S deemed to expire (or the amount of loss carryover deemed not to expire) as set forth in the election made pursuant to paragraph (b)(4) of this section;

(*4*) The amended amount of each loss carryover of S deemed to expire (or the amended amount of loss carryover deemed not to expire); and

(*5*) In the case of an amendment made pursuant to paragraph (b)(4)(vii)(A) of this section, a statement that the aggregate amount of loss carryovers of S and any higher- and lower-tier corporation of S that will be treated as not expiring as a result of amendments made pursuant to paragraph (b)(4)(vii)(A) of this section will not exceed the amount described in § 1.1502–20(c)(1)(iii) with respect to the acquired stock (computed without regard to the effect of the group's election or elections pursuant to paragraph (b)(4) of this section, but with regard to the effect of the prior group's election pursuant to § 1.1502–20(g), if any, prior to the application of § 1.1502–20(i)(3)).

(D) *Items taken into account in open years.* An amendment to an election made pursuant to paragraph (b)(4) of this section affects the group's items of income, gain, deduction, or loss only to the extent that the amendment gives rise, directly or indirectly, to items or amounts that would properly be taken into account in a year for which an assessment of deficiency or a refund for overpayment, as the case may be, is not prevented by any law or rule of law. Under this paragraph, if the year

to which a loss previously deemed to expire as a result of an election made pursuant to paragraph (b)(4) of this section is deemed not to expire as a result of an election made pursuant to this paragraph would have been carried back or carried forward is a year for which a refund of overpayment is prevented by law, then to the extent that the absorption of such loss in such year would have affected the tax treatment of another item (e.g., another loss that was absorbed in such year) that has an effect in a year for which a refund of overpayment is not prevented by any law or rule of law, the amendment to the election made pursuant to paragraph (b)(4) of this section will affect the treatment of such other item. Therefore, if the absorption of such loss (the first loss) in a year for which a refund of overpayment is prevented by law would have prevented the absorption of another loss (the second loss) in such year and such second loss would have been carried to and used in a year for which a refund of overpayment is not prevented by any law or rule of law (the other year), the amendment of the election makes the second loss available for use in the other year.

(E) *Higher- and lower-tier corporations of S.* A *higher-tier corporation of S* is a corporation that was a member of the prior group and, as a result of such higher-tier corporation becoming a member of the group; S became a member of the group. A *lower-tier corporation of S* is a corporation that was a member of the prior group and became a member of the group as a result of S becoming a member of the group.

(F) *Effective date.* This paragraph (b)(4)(vii) is applicable on and after March 3, 2005. For prior periods, see §1.1502–32T(b)(4)(vii) as contained in the 26 CFR part 1 in effect on March 2, 2005.

(5) *Examples*—(i) *In general.* For purposes of the examples in this section, unless otherwise stated, M owns all of the only class of S's stock, the stock is owned for the entire year, S owns no stock of lower-tier members, the tax year of all persons is the calendar year, all persons use the accrual method of accounting, the facts set forth the only corporate activity, preferred stock is described in section 1504(a)(4), all transactions are between unrelated persons, and tax liabilities are disregarded.

(ii) *Stock basis adjustments.* The principles of this paragraph (b) are illustrated by the following examples.

Example 1. Taxable income. (a) *Current taxable income.* For Year 1, the M group has $100 of taxable income when determined by including only S's items of income, gain, deduction, and loss taken into account. Under paragraph (b)(1) of this section, M's basis in S's stock is adjusted under this section as of the close of Year 1. Under paragraph (b)(2) of this section, M's basis in S's stock is increased by the amount of the M group's taxable income determined by including only S's items taken into account. Thus, M's basis in S's stock is increased by $100 as of the close of Year 1.

(b) *Intercompany gain that is not taken into account.* The facts are the same as in paragraph (a) of this *Example 1,* except that S also sells property to another member at a $25 gain in Year 1, the gain is deferred under §1.1502–13 and taken into account in Year 3, and M sells 10% of S's stock to nonmembers in Year 2. Under paragraph (b)(3)(i) of this section, S's deferred gain is not additional taxable income for Year 1 or 2 because it is not taken into account in determining the M group's consolidated taxable income for either of those years. The deferred gain is not tax-exempt income under paragraph (b)(3)(ii) of this section because it is not permanently excluded from S's gross income. The deferred gain does not result in a basis adjustment until Year 3, when it is taken into account in determining the M group's consolidated taxable income. Consequently, M's basis in the S shares sold is not increased to reflect S's gain from the intercompany sale of the property. In Year 3, the deferred gain is taken into account, but the amount allocable to the shares sold by M does not increase their basis because these shares are held by nonmembers.

(c) *Intercompany gain taken into account.* The facts are the same as in paragraph (b) of this *Example 1,* except that M sells all of S's stock in Year 2 (rather than only 10%). Under §1.1502–13, S takes the $25 gain into account immediately before S becomes a nonmember. Thus, M's basis in S's stock is increased to reflect S's gain from the intercompany sale of the property.

Example 2. Tax loss. (a) *Current absorption.* For Year 2, the M group has a $50 consolidated net operating loss when determined by taking into account only S's items of income, gain, deduction, and loss. S's loss is absorbed by the M group in Year 2, offsetting M's income for that year. Under paragraph (b)(3)(i)(A) of this section, because S's loss is absorbed in the year it arises, M has a $50

negative adjustment with respect to S's stock. Under paragraph (b)(2) of this section, M reduces its basis in S's stock by $50. Under paragraph (a)(3)(ii) of this section, if the decrease exceeds M's basis in S's stock, the excess is M's excess loss account in S's stock.

(b) *Interim determination from stock sale.* The facts are the same as in paragraph (a) of this *Example 2*, except that S's Year 2 loss arises in the first half of the calendar year, M sells 50% of S's stock on July 1 of Year 2, and M's income for Year 2 does not arise until after the sale of S's stock. M's income for Year 2 (exclusive of the sale of S's stock) is offset by S's loss, even though the income arises after the stock sale, and no loss remains to be apportioned to S. See §§1.1502–11 and 1.1502–21(b). Under paragraph (b)(3)(i)(A) of this section, because S's $50 loss is absorbed in the year it arises, it reduces M's basis in the S shares sold by $25 immediately before the stock sale. Because S becomes a nonmember, the loss also reduces M's basis in the retained S shares by $25 immediately before S becomes a nonmember.

(c) *Loss carryback.* The facts are the same as in paragraph (a) of this *Example 2*, except that M has no income or loss for Year 2, S's $50 loss is carried back and absorbed by the M group in Year 1 (offsetting the income of M or S), and the M group receives a $17 tax refund in Year 2 that is paid to S. Under paragraph (b)(3)(i)(B) of this section, because the $50 loss is carried back and absorbed in Year 1, it is treated as a tax loss for Year 2 (the year in which it arises). Under paragraph (b)(3)(ii) of this section, the refund is treated as tax-exempt income of S. Under paragraph (b)(3)(iv)(C) of this section, the tax- exempt income is taken into account in Year 2 because that is the year it would be taken into account under S's method of accounting if it were subject to Federal income taxation. Thus, under paragraph (b)(2) of this section, M reduces its basis in S's stock by $33 as of the close of Year 2 (the $50 tax loss, less the $17 tax refund).

(d) *Loss carryforward.* The facts are the same as in paragraph (a) of this *Example 2*, except that M has no income or loss for Year 2, and S's loss is carried forward and absorbed by the M group in Year 3 (offsetting the income of M or S). Under paragraph (b)(3)(i)(A) of this section, the loss is not treated as a tax loss under paragraph (b)(2) of this section until Year 3.

Example 3. Tax-exempt income and noncapital, nondeductible expenses. (a) *Facts.* For Year 1, the M group has $500 of consolidated taxable income. However, the M group has a $100 consolidated net operating loss when determined by including only S's items of income, gain, deduction, and loss taken into account. Also for Year 1, S has $80 of interest income that is permanently excluded from gross income under section 103, and S incurs $60 of related expense for which a deduction is permanently disallowed under section 265.

(b) *Analysis.* Under paragraph (b)(3)(i)(A) of this section, S has a $100 tax loss for Year 1. Under paragraph (b)(3)(ii)(A) of this section, S has $80 of tax-exempt income. Under paragraph (b)(3)(iii)(A) of this section, S has $60 of noncapital, nondeductible expense. Under paragraph (b)(3)(iv)(C) of this section, the tax-exempt income and noncapital, nondeductible expense are taken into account in Year 1 because that is the year they would be taken into account under S's method of accounting if they were subject to Federal income taxation. Thus, under paragraph (b) of this section, M reduces its basis in S's stock as of the close of Year 1 by an $80 net amount (the $100 tax loss, less $80 of tax-exempt income, plus $60 of noncapital, nondeductible expenses).

Example 4. Discharge of indebtedness. (a) *Facts.* M forms S on January 1 of Year 1 and S borrows $200. During Year 1, S's assets decline in value and the M group has a $100 consolidated net operating loss. Of that amount, $10 is attributable to M and $90 is attributable to S under the principles of §1.1502–21(b)(2)(iv). None of the loss is absorbed by the group in Year 1, and S is discharged from $100 of indebtedness at the close of Year 1. M has a $0 basis in the S stock. M and S have no attributes other than the consolidated net operating loss. Under section 108(a), S's $100 of discharge of indebtedness income is excluded from gross income because of insolvency. Under section 108(b) and §1.1502–28, the consolidated net operating loss is reduced to $0.

(b) *Analysis.* Under paragraph (b)(3)(iii)(A) of this section, the reduction of $90 of the consolidated net operating loss attributable to S is treated as a noncapital, nondeductible expense in Year 1 because that loss is permanently disallowed by section 108(b) and §1.1502–28. Under paragraph (b)(3)(ii)(C)(*1*) of this section, all $100 of S's discharge of indebtedness income is treated as tax-exempt income in Year 1 because the discharge results in a $100 reduction to the consolidated net operating loss. Consequently, the loss and the cancellation of the indebtedness result in a net positive $10 adjustment to M's basis in its S stock.

(c) *Insufficient attributes.* The facts are the same as in paragraph (a) of this Example 4, except that S is discharged from $120 of indebtedness at the close of Year 1. Under section 108(a), S's $120 of discharge of indebtedness income is excluded from gross income because of insolvency. Under section 108(b) and §1.1502–28, the consolidated net operating loss is reduced by $100 to $0 after the determination of tax for Year 1. Under paragraph (b)(3)(iii)(A) of this section, the reduction of $90 of the consolidated net operating loss attributable to S is treated as a noncapital, nondeductible expense. Under paragraph

(b)(3)(ii)(C)(*1*) of this section, only $100 of the discharge is treated as tax-exempt income because only that amount is applied to reduce tax attributes. The remaining $20 of discharge of indebtedness income excluded from gross income under section 108(a) has no effect on M's basis in S's stock.

(d) *Purchase price adjustment.* Assume instead that S buys land in Year 1 in exchange for S's $100 purchase money note (bearing interest at a market rate of interest in excess of the applicable Federal rate, and providing for a principal payment at the end of Year 10), and the seller agrees with S in Year 4 to discharge $60 of the note as a purchase price adjustment to which section 108(e)(5) applies. S has no discharge of indebtedness income that is treated as tax-exempt income under paragraph (b)(3)(ii) of this section. In addition, the $60 purchase price adjustment is not a noncapital, nondeductible expense under paragraph (b)(3)(iii) of this section. A purchase price adjustment is not equivalent to a discharge of indebtedness that is offset by a deduction or loss. Consequently, the purchase price adjustment results in no net adjustment to M's basis in S's stock under paragraph (b) of this section.

Example 5. Distributions. (a) *Amounts declared and distributed.* For Year 1, the M group has $120 of consolidated taxable income when determined by including only S's items of income, gain, deduction, and loss taken into account. S declares and makes a $10 dividend distribution to M at the close of Year 1. Under paragraph (b) of this section, M increases its basis in S's stock as of the close of Year 1 by a $110 net amount ($120 of taxable income, less a $10 distribution).

(b) *Distributions in later years.* The facts are the same as in paragraph (a) of this *Example 5,* except that S does not declare and distribute the $10 until Year 2. Under paragraph (b) of this section, M increases its basis in S's stock by $120 as of the close of Year 1, and decreases its basis by $10 as of the close of Year 2. (If M were also a subsidiary, the basis of its stock would also be increased in Year 1 to reflect M's $120 adjustment to basis of S's stock; the basis of M's stock would not be changed as a result of S's distribution in Year 2, because M's $10 of tax-exempt dividend income under paragraph (b)(3)(ii) of this section would be offset by the $10 negative adjustment to M's basis in S's stock for the distribution.)

(c) *Amounts declared but not distributed.* The facts are the same as in paragraph (a) of this *Example 5,* except that, during December of Year 1, S declares (and M becomes entitled to) another $70 dividend distribution with respect to its stock, but M does not receive the distribution until after it sells all of S's stock at the close of Year 1. Under §1.1502–13(f)(2)(iv), S is treated as making a $70 distribution to M at the time M becomes entitled to the distribution. (If S is distributing an appreciated asset, its gain under section 311 is also taken into account under paragraph (b)(3)(i) of this section at the time M becomes entitled to the distribution.) Consequently, under paragraph (b) of this section, M increases its basis in S's stock as of the close of Year 1 by only a $40 net amount ($120 of taxable income, less two distributions totalling $80). Any further adjustments after S ceases to be a member and the $70 distribution is made would be duplicative, because the stock basis has already been adjusted for the distribution. Accordingly, the distribution will not result in further adjustments or gain, even if the distribution is a payment to which section 301(c)(2) or (3) applies.

Example 6. Reorganization with boot. (i) *Facts.* M owns all the stock of S and T. M owns ten shares of the same class of common stock of S and ten shares of the same class of common stock of T. The fair market value of each share of S stock is $10 and the fair market value of each share of T stock is $10. On January 1 of Year 1, M has a $5 basis in each of its ten shares of S stock and a $10 basis in each of its ten shares of T stock. S and T have no items of income, gain, deduction, or loss for Year 1. S and T each have substantial earnings and profits. At the close of Year 1, T merges into S in a reorganization described in section 368(a)(1)(A) (and in section 368(a)(1)(D)). M receives no additional S stock, but does receive $10 which is treated as a dividend under section 356(a)(2).

(ii) *Analysis.* The merger of T into S is a transaction to which §1.1502–13(f)(3) applies. Under §1.1502–13(f)(3) and §1.358–2(a)(2)(iii), M is deemed to receive ten additional shares of S stock with a total fair market value of $100 (the fair market value of the T stock surrendered by M). Under §1.358–2(a)(2)(i), M will have a basis of $10 in each share of S stock deemed received in the reorganization. Under §1.358–2(a)(2)(iii), M is deemed to surrender all twenty shares of its S stock in a recapitalization under section 368(a)(1)(E) in exchange for the ten shares of S stock, the number of shares of S stock held by M immediately after the transaction. Thus, under §1.358–2(a)(2)(i), M has five shares of S stock each with a basis of $10 and five shares of S stock each with a basis of $20. The $10 M received is treated as a dividend distribution under section 301 and, under paragraph (b)(3)(v) of this section, the $10 is a distribution to which paragraph (b)(2)(iv) of this section applies. Accordingly, M's total basis in the S stock is decreased by the $10 distribution.

Example 7. Tiering up of basis adjustments. M owns all of S's stock, and S owns all of T's stock. For Year 1, the M group has $100 of consolidated taxable income when determined by including only T's items of income, gain, deduction, and loss taken into account, and $50 of consolidated taxable income when

determined by including only S's items taken into account. S increases its basis in T's stock by $100 under paragraph (b) of this section. Under paragraph (a)(3) of this section, this $100 basis adjustment is taken into account in determining M's adjustments to its basis in S's stock. Thus, M increases its basis in S's stock by $150 under paragraph (b) of this section.

Example 8. Allocation of items. (a) *Acquisition in mid-year.* M is the common parent of a consolidated group, and S is an unaffiliated corporation filing separate returns on a calendar-year basis. M acquires all of S's stock and S becomes a member of the M group on July 1 of Year 1. For the entire calendar Year 1, S has $100 of ordinary income and under § 1.1502–76(b) $60 is allocated to the period from January 1 to June 30 and $40 to the period from July 1 to December 31. Under paragraph (b) of this section, M increases its basis in S's stock by $40.

(b) *Sale in mid-year.* The facts are the same as in paragraph (a) of this *Example 8,* except that S is a member of the M group at the beginning of Year 1 but ceases to be a member on June 30 as a result of M's sale of S's stock. Under paragraph (b) of this section, M increases its basis in S's stock by $60 immediately before the stock sale. (M's basis increase would be the same if S became a nonmember because S issued additional shares to nonmembers.)

(c) *Absorption of loss carryovers.* Assume instead that S is a member of the M group at the beginning of Year 1 but ceases to be a member on June 30 as a result of M's sale of S's stock, and a $100 consolidated net operating loss attributable to S is carried over by the M group to Year 1. The consolidated net operating loss may be apportioned to S for its first separate return year only to the extent not absorbed by the M group during Year 1. Under paragraph (b)(3)(i) of this section, if the loss is absorbed by the M group in Year 1, whether the offsetting income arises before or after M's sale of S's stock, the absorption of the loss carryover is included in the determination of S's taxable income or loss for Year 1. Thus, M's basis in S's stock is adjusted under paragraph (b) of this section to reflect any absorption of the loss by the M group.

Example 9. Gross-ups. (a) *Facts.* M owns all of the stock of S, and S owns all of the stock of T, a newly formed controlled foreign corporation that is not a passive foreign investment company. In Year 1, T has $100 of subpart F income and pays $34 of foreign income tax, leaving T with $66 of earnings and profits. The M group has $100 of consolidated taxable income when determined by taking into account only S's items (the inclusion under section 951(a), taking into account the section 78 gross-up). As a result of the section 951(a) inclusion, S increases its basis in T's stock by $66 under section 961(a).

(b) *Analysis.* Under paragraph (b)(3)(i) of this section, S has $100 of taxable income. Under paragraph (b)(3)(iii)(B) of this section, the $34 gross-up for taxes paid by T that S is treated as having paid is a noncapital, nondeductible expense (whether or not any corresponding amount is claimed by the M group as a tax credit). Thus, M increases its basis in S's stock under paragraph (b) of this section by the net adjustment of $66.

(c) *Subsequent distribution.* The facts are the same as in paragraph (a) of this *Example 9,* except that T distributes its $66 of earnings and profits in Year 2. The $66 distribution received by S is excluded from S's income under section 959(a) because the distribution represents earnings and profits attributable to amounts that were included in S's income under section 951(a) for Year 1. In addition, S's basis in T's stock is decreased by $66 under section 961(b). The excluded distribution is not tax-exempt income under paragraph (b)(3)(ii) of this section because of the corresponding reduction to S's basis in T's stock. Consequently, M's basis in S's stock is not adjusted under paragraph (b) of this section for Year 2.

Example 10. Recapture of tax-exempt items. (a) *Facts.* S is a life insurance company. For Year 1, the M group has $200 of consolidated taxable income, determined by including only S's items of income, gain, deduction, and loss taken into account (including a $300 small company deduction under section 806). In addition, S has $100 of tax-exempt interest income, $60 of which is S's *company share.* The remaining $40 of tax-exempt income is the *policyholders' share* that reduces S's deduction for increase in reserves.

(b) *Tax-exempt items generally.* Under paragraph (b)(3)(i) of this section, S has $200 of taxable income for Year 1. Also for Year 1, S has $100 of tax-exempt income under paragraph (b)(3)(ii)(A) of this section, and another $300 is treated as tax-exempt income under paragraph (b)(3)(ii)(B) of this section because of the deduction under section 806. Under paragraph (b)(3)(iii) of this section, S has $40 of noncapital, nondeductible expenses for Year 1 because S's deduction under section 807 for its increase in reserves has been permanently reduced by the $40 policyholders' share of the tax-exempt interest income. Thus, M increases its basis in S's stock by $560 under paragraph (b) of this section.

(c) *Recapture.* Assume instead that S is a property and casualty company and, for Year 1, S accrues $100 of estimated salvage recoverable under section 832. Of this amount, $87 (87% of $100) is excluded from gross income because of the ''fresh start'' provisions of Sec. 11305(c) of P.L. 101–508 (the Omnibus Budget Reconciliation Act of 1990). Thus, S has $87 of tax-exempt income under paragraph (b)(3)(ii)(A) of this section that increases M's basis in S's stock for Year 1. (S

also has $13 of taxable income over the period of inclusion under section 481.) In Year 5, S determines that the $100 salvage recoverable was overestimated by $30 and deducts $30 for the reduction of the salvage recoverable. However, S has $26.10 (87% of $30) of taxable income in Year 5 due to the partial recapture of its fresh start. Because S has no basis corresponding to this income, S is treated under paragraph (b)(3)(iii)(B) of this section as having a $26.10 noncapital, nondeductible expense in Year 5. This treatment is necessary to reflect the elimination of the erroneous fresh start in S's stock basis and causes a decrease in M's basis in S's stock by $30 for Year 5 (a $3.90 taxable loss and a $26.10 special adjustment).

(c) *Allocation of adjustments among shares of stock*—(1) *In general*—(i) *Distributions*. The adjustment that is described in paragraph (b)(2)(iv) of this section (negative adjustments for distributions) is allocated to the shares of S stock to which the distribution relates.

(ii) *Special rules applicable in the case of certain loss transfers of subsidiary stock*—(A) *Losses reattributed pursuant to an election under §1.1502–36(d)(6)*—(*1*) *General rule*. If a member transfers loss shares of S stock and the common parent elects under §1.1502–36(d)(6) to reattribute all or a portion of S's attributes, S's resulting noncapital, nondeductible expense is allocated to all loss shares of S stock transferred by members in the transaction. The expense is allocated among those S shares in proportion to the loss in the shares. The tier-up of that expense is included in the remaining adjustment (see paragraph (c)(1)(iii) of this section).

(*2*) *Reattribution of attributes of a subsidiary that is lower-tier to S*. If a member transfers loss shares of S stock and the common parent elects under §1.1502–36(d)(6) to reattribute attributes of a subsidiary (S2) that is lower-tier to S, S2's resulting noncapital, nondeductible expense is allocated among S2 shares held by members as of the transaction, other than those transferred in the transaction and with respect to which gain or loss was recognized (recognition transfer), in a manner that permits the full amount of the expense to tier up and be applied to the bases of the loss shares of S stock transferred by members in the transaction. The expense is allocated among those S2 shares with positive basis in a manner that, first, reduces the bases of S2's preferred shares to equalize and then eliminate loss and, second, reduces the bases of S2's common shares in a manner that reduces disparity among the bases of those common shares to the greatest extent possible. The noncapital, nondeductible expense applied to the S2 shares tiers up and is applied to the stock of any subsidiaries that are lower-tier to S (middle-tier subsidiaries) in a manner that will permit the full amount of this expense to be applied to reduce the bases of the loss shares of S stock transferred by members in the transaction. Similar to the allocation among the S2 shares, the tier-up of this expense is allocated among the middle-tier subsidiary shares held by members as of the transaction, other than those transferred in a recognition transfer, in a manner that permits the full amount of the expense to tier up and be applied to the bases of the loss shares of S stock transferred by members in the transaction. The tier-up of this expense is allocated among those middle-tier subsidiary shares with positive basis in a manner that, first, reduces the bases of the middle-tier subsidiary's preferred shares to equalize and then eliminate loss and, second, reduces the bases of the middle-tier subsidiary's common shares in a manner that reduces disparity among the bases of those common shares to the greatest extent possible. The tier-up of this expense is allocated to the loss shares of S stock transferred by members in the transaction in the same manner as provided in paragraph (c)(1)(ii)(A)(*1*) of this section, and thereafter the tier-up of that expense is included in the remaining adjustment (see paragraph (c)(1)(iii) of this section).

(*3*) *Example*. The following example illustrates the rules of this paragraph (c)(1)(ii)(A).

Example. Assume P owns M1, P and M1 own M2, M2 owns S, M1 and S own S1, and M1 and S1 own S2. If S sells a portion of the S1 shares at a gain and M2 sells all of the S stock at a net loss (after adjusting the basis for the gain recognized by S on the sale of the S1 shares), and P elects under §1.1502–36(d)(6) to reattribute attributes of S2, the resulting noncapital, nondeductible expense is allocated entirely to the S2 shares held by

S1 with positive basis in a manner that reduces the disparity in those bases to the greatest extent possible. The tier-up of this amount is allocated entirely to the S1 shares held by S (excluding the S1 shares sold) with positive basis in a manner that reduces the disparity in those bases to the greatest extent possible. The tier-up of this amount is allocated to the loss shares of S stock sold by M2 in proportion to the loss in those shares. The tier-up of this amount is then included in the remaining adjustment and tiers up from M2 to M1 and P, and from M1 to P under the general rules of this section.

(B) *Tier-up of reallocated investment adjustments subject to prior use limitation.* If the reallocation of an investment adjustment under §1.1502–36(b)(2) is subject to the prior use limitation in §1.1502–36(b)(2)(iii)(B)(2), no amount of the tier-up of such reallocated investment adjustment shall be allocated to any share whose prior use resulted in the application of the limitation. Thereafter, the tier-up of this amount is included in the remaining adjustment (see paragraph (c)(1)(iii) of this section).

(iii) *Remaining adjustment.* The *remaining adjustment* is the adjustment that consists of the items described in paragraphs (b)(2)(i) through (b)(2)(iii) of this section (adjustments for taxable income or loss, tax-exempt income, and noncapital, nondeductible expenses), including adjustments to lower-tier stock basis that tier up under paragraph (a)(3)(iii) of this section, but only to the extent not specially allocated under paragraph (c)(1)(ii) of this section. The remaining adjustment is allocated among the shares of S stock as provided in paragraphs (c)(2) through (c)(4) of this section. If the remaining adjustment is positive, it is allocated first to any preferred stock as provided in paragraph (c)(3) of this section, and then to the common stock as provided in paragraph (c)(2) of this section. If the remaining adjustment is negative, it is allocated only to common stock as provided in paragraph (c)(2) of this section.

(iv) *Nonmember shares.* No adjustment under this section that is allocated to a share for the period it is owned by a nonmember affects the basis of the share.

(v) *Cross-references.* See paragraph (c)(4) of this section for the reallocation of adjustments, and paragraph (d) of this section for definitions. See §1.1502–19(d) for special allocations of basis determined or adjusted under the Internal Revenue Code (Code) with respect to excess loss accounts.

(2) *Common stock*—(i) *Allocation within a class.* The remaining adjustment described in paragraph (c)(1)(iii) of this section that is allocable to a class of common stock is generally allocated equally to each share within the class. However, if a member has an excess loss account in a share of a class of common stock at the time a positive remaining adjustment is to be allocated, the portion of the positive remaining adjustment allocable to the member with respect to the class is allocated first to equalize and then eliminate that member's excess loss accounts. It is then allocated equally among the members' shares in that class. Similarly, the portion of any negative remaining adjustment allocable to the member with respect to the class is allocated equally to the member's shares with positive bases, eliminating all positive basis in shares of the class before creating or increasing any excess loss accounts. After positive basis is eliminated, any remaining portion of the negative remaining adjustment is allocated to equalize the member's excess loss accounts in the shares of that class to the greatest extent possible. Distributions and any adjustments or determinations under the Internal Revenue Code (for example, under section 358, including any modifications under §1.1502–19(d)) are taken into account before the allocation is made under this paragraph (c)(2)(i).

(ii) *Allocation among classes*—(A) *General rule.* If S has more than one class of common stock, the extent to which the remaining adjustment described in paragraph (c)(1)(iii) of this section is allocated to each class is determined, based on consistently applied assumptions, by taking into account the terms of each class and all other facts and circumstances relating to the overall economic arrangement. The allocation generally must reflect the manner in which the classes participate in the economic benefit or burden (if any) corresponding to the items of income,

gain, deduction, or loss allocated. In determining participation, any differences in voting rights are not taken into account, and the following factors are among those to be considered—

(*1*) The interest of each share in economic profits and losses (if different from the interest in taxable income);

(*2*) The interest of each share in cash flow and other non-liquidating distributions; and

(*3*) The interest of each share in distributions in liquidation.

(B) *Distributions and Code adjustments.* Distributions and any adjustments or determinations under the Internal Revenue Code are taken into account before the allocation is made under this paragraph (c)(2)(ii).

(3) *Preferred stock.* If the remaining adjustment described in paragraph (c)(1)(iii) of this section is positive, it is allocated to preferred stock to the extent required (when aggregated with prior allocations to the preferred stock during the period that S is a member of the consolidated group) to reflect distributions described in section 301 (and all other distributions treated as dividends) to which the preferred stock becomes entitled, and arrearages arising, during the period that S is a member of the consolidated group. For this purpose, the preferred stock is treated as entitled to a distribution no later than the time the distribution is taken into account under the Internal Revenue Code (e.g., under section 305). If the amount of distributions and arrearages exceeds the positive amount (when aggregated with prior allocations), the positive amount is first allocated among classes of preferred stock to reflect their relative priorities, and the amount allocated to each class is then allocated pro rata within the class. An allocation to a share with respect to arrearages and distributions for the period the share is owned by a nonmember is not reflected in the basis of the share under paragraph (b) of this section. However, if M and S cease to be members of one consolidated group and remain affiliated as members of another consolidated group, M's ownership of S's stock during consolidated return years of the prior group is treated for this purpose as ownership by a member to the extent that the adjustments during the prior consolidated return years are still reflected in the basis of the preferred stock.

(4) *Cumulative redetermination*—(i) *General rule.* A member's basis in each share of S preferred and common stock must be redetermined whenever necessary to determine the tax liability of any person. See paragraph (b)(1) of this section. The redetermination is made by reallocating S's adjustments described in paragraphs (c)(1)(ii)(B) (specially allocated adjustments for tier-up of reallocated investment adjustments subject to prior use limitation) and (c)(1)(iii) (remaining adjustments) of this section for each consolidated return year (or other applicable period) of the group by taking into account all of the facts and circumstances affecting allocations under this paragraph (c) as of the redetermination date with respect to all of the S shares. For this purpose:

(A) Amounts may be reallocated from one class of S's stock to another class, but not from one share of a class to another share of the same class.

(B) If there is a change in the equity structure of S (e.g., as the result of S's issuance, redemption, or recapitalization of shares), a cumulative redetermination is made for the period before the change. If a reallocation is required by another redetermination after a change, amounts arising after the change are reallocated before amounts arising before the change.

(C) If S becomes a nonmember as a result of a change in its equity structure, any reallocation is made only among the shares of S's stock immediately before the change. For example, if S issues stock to a nonmember creditor in exchange for its debt, and the exchange results in S becoming a nonmember, any reallocation is only among the shares of S's stock immediately before the exchange.

(D) Any reallocation is treated for all purposes after it is made (including subsequent redeterminations) as the original allocation of an amount under this paragraph (c), but the reallocation does not affect any prior period.

(ii) *Prior use of allocations.* An amount may not be reallocated under paragraph (c)(4)(i) of this section to the extent that the amount has been used before the reallocation. For this purpose, an amount has been used to the extent it has been taken into account, directly or indirectly, by any member in determining income, gain, deduction, or loss, or in determining the basis of any property that is not subject to this section (e.g., stock of a corporation that has become a nonmember). For example, if M sells a share of S stock, an amount previously allocated to the share cannot be reallocated to another share of S stock, but an amount allocated to another share of S stock can still be reallocated to the sold share because the reallocated amount has not been taken into account; however, any adjustment reallocated to the sold share may effectively be eliminated, because the reallocation was not in effect when the share was previously sold and M's gain or loss from the sale is not redetermined. If, however, M sells the share of S stock to another member, the amount is not used until M's gain or loss is taken into account under § 1.1502–13.

(5) *Examples.* The principles of this paragraph (c) are illustrated by the following examples.

Example 1. Ownership of less than all the stock. (a) *Facts.* M owns 80% of S's only class of stock with an $800 basis. For Year 1, S has $100 of taxable income.

(b) *Analysis.* Under paragraph (c)(1) of this section, the $100 positive adjustment under paragraph (b) of this section for S's taxable income is allocated among the shares of S's stock, including shares owned by nonmembers. Under paragraph (c)(2)(i) of this section, the adjustment is allocated equally to each share of S's stock. Thus, M increases its basis in S's stock under paragraph (b) of this section as of the close of Year 1 by $80. (The basis of the 20% of S's stock owned by nonmembers is not adjusted under this section.)

(c) *Varying interest.* The facts are the same as in paragraph (a) of this *Example 1,* except that M buys the remaining 20% of S's stock at the close of business on June 30 of Year 1 for $208. Under paragraph (b)(1) of this section and the principles of § 1.1502–76(b), S's $100 of taxable income is allocable $40 to the period from January 1 to June 30 and $60 to the period from July 1 to December 31. Thus, for the period ending June 30, M is treated as having a $32 adjustment with respect to the S stock that M has owned since January 1 (80% of $40) and, under paragraph (c)(2)(i) of this section, the adjustment is allocated equally among those shares. For the period ending December 31, M is treated as having a $60 adjustment (100% of $60) that is also allocated equally among M's shares of S's stock owned after June 30. M's basis in the shares owned as of the beginning of the year therefore increases by $80 (the sum of 80% of $40 and 80% of $60), from $800 to $880, and M's basis in the shares purchased on June 30 increases by $12 (20% of $60), from $208 to $220. Thus, M's aggregate basis in S's stock as of the end of Year 1 is $1,100.

(d) *Tax liability.* The facts are the same as in paragraph (a) of this *Example 1,* except that M pays S's $34 share of the group's consolidated tax liability resulting from S's taxable income, and S does not reimburse M. S's $100 of taxable income results in a positive adjustment under paragraph (b)(3)(i) of this section, and S's $34 of tax liability results in a negative adjustment under paragraph (b)(3)(iv)(D) of this section and the principles of section 1552. Because S does not make any payment in recognition of the additional tax liability, by analogy to the treatment under § 1.1552–1(b)(2), S is treated as having made a $34 payment that is described in paragraph (b)(3)(iii) of this section (noncapital, nondeductible expenses) and as having received an equal amount from M as a capital contribution. Thus, M increases its basis in its S stock by $52.80 (80% of the $100 of taxable income, less 80% of the $34 tax payment). In addition, M increases its basis in S's stock by $34 under the Internal Revenue Code and paragraph (a)(2) of this section to reflect the capital contribution. In the aggregate, M increases its basis in S's stock by $86.80. (If, as in paragraph (c) of this *Example 1,* M buys the remaining 20% of S's stock at the close of business on June 30, M increases its basis in S's stock by another $7.90 for the additional 20% interest in S's income after June 30 ($60 multiplied by 20%, less 20% of the $20.40 tax payment on $60); the $34 capital contribution by M is reflected in all of its S shares (not just the original 80%), and M's aggregate basis adjustment under this section is $94.70 ($86.80 plus $7.90).)

Example 2. Preferred stock. (a) *Facts.* M owns all of S's common stock with an $800 basis, and nonmembers own all of S's preferred stock. The preferred stock was issued for $200, has a $20 annual, cumulative preference as to dividends, and has an initial liquidation preference of $200. For Year 1, S has $50 of taxable income and no distributions are declared or made.

(b) *Analysis of arrearages.* Under paragraphs (c) (1) and (3) of this section, $20 of the $50 positive adjustment under paragraph (b) of this section is allocated first to the preferred stock to reflect the dividend arrearage arising in Year 1. The remaining $30 of the positive adjustment is allocated to the common

stock, increasing M's basis from $800 to $830 as of the close of Year 1. (The basis of the preferred stock owned by nonmembers is not adjusted under this section.)

(c) *Current distribution.* The facts are the same as in paragraph (a) of this *Example 2,* except that S declares and makes a $20 distribution with respect to the preferred stock during Year 1 in satisfaction of its preference. The results are the same as in paragraph (b) of this *Example 2.*

(d) *Varying interest.* The facts are the same as in paragraph (a) of this *Example 2,* except that S has no income or loss for Years 1 and 2, M purchases all of S's preferred stock at the beginning of Year 3 for $240, and S has $70 of taxable income for Year 3. Under paragraph (c)(3) of this section, $60 of the $70 positive adjustment under paragraph (b) of this section is allocated to the preferred stock to reflect the dividends arrearages for Years 1 through 3, but only the $20 for Year 3 is reflected in the basis of the preferred stock under paragraph (b) of this section. (The remaining $40 is not reflected because the preferred stock was owned by nonmembers during Years 1 and 2.) Thus, M increases its basis in S's preferred stock from $240 to $260, and its basis in S's common stock from $800 to $810, as of the close of Year 3. (If M had acquired all of S's preferred stock in a transaction to which section 351 applies, and M's initial basis in S's preferred stock was $200 under section 362, M's basis in S's preferred stock would increase from $200 to $220.)

(e) *Varying interest with current distributions.* The facts are the same as in paragraph (d) of this *Example 2,* except that S declares and makes a $20 distribution with respect to the preferred stock in each of Years 1 and 2 in satisfaction of its preference, and M purchases all of S's preferred stock at the beginning of Year 3 for $200. Under paragraph (c)(3) of this section, $40 of the $70 positive adjustment under paragraph (b) of this section is allocated to the preferred stock to reflect the distributions in Years 1 and 2, and $20 of the $70 is allocated to the preferred stock to reflect the arrearage for Year 3. However, as in paragraph (d) of this *Example 2,* only the $20 attributable to Year 3 is reflected in the basis of the preferred stock under paragraph (b) of this section. Thus, M increases its basis in S's preferred stock from $200 to $220, and M increases its basis in S's common stock from $800 to $810.

Example 3. Cumulative redetermination. (a) *Facts.* M owns all of S's common and preferred stock. The preferred stock has a $100 annual, cumulative preference as to dividends. For Year 1, S has $200 of taxable income, the first $100 of which is allocated to the preferred stock and the remaining $100 of which is allocated to the common stock. For Year 2, S has no adjustment under paragraph (b) of this section, and M sells all of S's common stock at the close of Year 2.

(b) *Analysis.* Under paragraph (c)(4) of this section, M's basis in S's common stock must be redetermined as of the sale of the stock. The redetermination is made by reallocating the $200 positive adjustment under paragraph (b) of this section for Year 1 by taking into account all of the facts and circumstances affecting allocations as of the sale. Thus, the $200 positive adjustment for Year 1 is reallocated entirely to the preferred stock to reflect the dividend arrearages for Years 1 and 2. The reallocation away from the common stock reflects the fact that, because of the additional amount of arrearage in Year 2, the common stock is not entitled to any part of the $200 of taxable income from Year 1. Thus, the common stock has no positive or negative adjustment, and the preferred stock has a $200 positive adjustment. These reallocations are treated as the original allocations for Years 1 and 2. (The results for the common stock would be the same if the common and preferred stock were not owned by the same member, or the preferred stock were owned by nonmembers.)

(c) *Preferred stock issued after adjustment arises.* The facts are the same as in paragraph (a) of this *Example 3,* except that S does not issue its preferred stock until the beginning of Year 2, S has no further adjustment under paragraph (b) of this section for Years 2 and 3, and M sells S's common stock at the close of Year 3. Under paragraphs (c) (1) and (2) of this section, the $200 positive adjustment for Year 1 is initially allocated entirely to the common stock. Under paragraph (c)(4) of this section, the $200 adjustment is reallocated to the preferred stock to reflect the arrearages for Years 2 and 3. Thus, the common stock has no positive or negative adjustment.

(d) *Common stock issued after adjustment arises.* The facts are the same as in paragraph (a) of this *Example 3,* except that S has no preferred stock, S issues additional common stock of the same class at the beginning of Year 2, S has no further adjustment under paragraph (b) of this section in Years 2 and 3, and M sells its S common stock at the close of Year 3. Under paragraphs (c) (1) and (2) of this section, the $200 positive adjustment for Year 1 is initially allocated entirely to the original common stock. Under paragraph (c)(4)(i)(A) of this section, the $200 adjustment is not reallocated among the original common stock and the additional stock. Unlike the preferred stock in paragraph (c) of this *Example 3,* the additional common stock is of the same class as the original stock, and there is no reallocation between shares of the same class.

(e) *Positive and negative adjustments.* The facts are the same as in paragraph (a) of this *Example 3,* except that S has a $200 loss for Year 2 that results in a negative adjustment

to the common stock before any redetermination. For purposes of the basis redetermination under paragraph (c)(4) of this section, the Year 1 and 2 adjustments under paragraph (b) of this section are not netted. Thus, as in paragraph (b) of this *Example 3*, the redetermination is made by reallocating the $200 positive adjustment for Year 1 entirely to the preferred stock. The $200 negative adjustment for Year 2 is allocated entirely to the common stock. Consequently, the preferred stock has a $200 positive cumulative adjustment, and the common stock has a $200 negative cumulative adjustment. (The results would be the same if there were no other adjustments described in paragraph (b) of this section, M sells S's common stock at the close of Year 3 rather than Year 2, and an additional $100 arrearage arises in Year 3; only adjustments under paragraph (b) of this section may be reallocated, and there is no additional adjustment for Year 3.)

(f) *Current distributions*. The facts are the same as in paragraph (a) of this *Example 3*, except that, during Year 1, S declares and makes a distribution to M of $100 as a dividend on the preferred stock and $100 as a dividend on the common stock. The taxable income and distributions result in no Year 1 adjustment under paragraph (b) of this section for either the common or preferred stock. For example, if T merges into S, S is treated, as the context may require, as a successor to T and as becoming a member of the group. However, as in paragraph (b) of this *Example 3*, the redetermination under paragraph (c)(4) of this section is made by reallocating a $200 positive adjustment for Year 1 (S's net adjustment described in paragraph (b) of this section, determined without taking distributions into account) to the preferred stock. Consequently, the preferred stock has a $100 positive cumulative adjustment ($200 of taxable income, less a $100 distribution with respect to the preferred stock) and the common stock has a $100 negative cumulative adjustment (for the distribution).

(g) *Convertible preferred stock*. The facts are the same as in paragraph (a) of this *Example 3*, except that the preferred stock is convertible into common stock that is identical to the common stock already outstanding, the holders of the preferred stock convert the stock at the close of Year 2, and no stock is sold until the close of Year 5. Under paragraph (c)(4) of this section, the $200 positive adjustment for Year 1 is reallocated entirely to the preferred stock immediately before the conversion. The newly issued common stock is treated as a second class of S common stock, and adjustments under paragraph (b) of this section are allocated between the original and the new common stock under paragraph (c)(2)(ii) of this section. Although the preferred stock is converted to common stock, the $200 adjustment to the preferred stock is not subsequently reallocated between the original and the new common stock. Because the original and the new stock are equivalent, adjustments under paragraph (b) of this section for subsequent periods are allocated equally to each share.

(h) *Prior use of allocations*. The facts are the same as in paragraph (a) of this *Example 3*, except that M sells 10% of S's common stock at the close of Year 1, and the remaining 90% at the close of Year 2. M's basis in the common stock sold in Year 1 reflects $10 of the adjustment allocated to the common stock for Year 1. Under paragraph (c)(4)(ii) of this section, because $10 of the Year 1 adjustment was used in determining M's gain or loss, only $90 is reallocated to the preferred stock, and $10 remains allocated to the common stock sold.

(i) *Lower-tier members*. The facts are the same as in paragraph (a) of this *Example 3*, except that M owns only S's common stock, and M is also a subsidiary. If there is a redetermination under paragraph (c)(4) of this section by a member owning M's stock, a redetermination with respect to S's stock must be made first, and the effect of that redetermination on M's adjustments is taken into account under paragraph (b) of this section. However, as in paragraph (h) of this *Example 3*, to the extent an amount of the initial adjustments with respect to S's common stock have already been tiered up and used by a member owning M's stock, that amount remains with S's common stock (and the higher-tier member using the adjustment with respect to M's stock), and may not be reallocated to S's preferred stock.

Example 4. Allocation to preferred stock between groups. (a) *Facts*. M owns all of S's only class of stock, and S owns all of T's common and preferred stock. The preferred stock has a $100 annual, cumulative preference as to dividends. For Year 1, T has $200 of taxable income, the first $100 of which is allocated to the preferred stock and the remaining $100 of which is allocated to the common stock, and S has no adjustments other than the amounts tiered up from T. S and T have no adjustments under paragraph (b) of this section for Years 2 and 3. X, the common parent of another consolidated group, purchases all of S's stock at the close of Year 3, and S and T become members of the X group. For Year 4, T has $200 of taxable income, and S has no adjustments other than the amounts tiered up from T.

(b) *Analysis for Years 1 through 3*. Under paragraph (c)(4) of this section, the allocation of S's adjustments under paragraph (b) of this section (determined without taking distributions into account) must be redetermined as of the time M sells S's stock. As a result of this redetermination, T's common stock has no positive or negative adjustment and the preferred stock has a $200 positive adjustment.

(c) *Analysis for Year 4.* Under paragraph (c)(3) of this section, the allocation of T's $200 positive adjustment in Year 4 to T's preferred stock with respect to arrearages is made by taking into account the consolidated return years of both the M group and the X group. Thus, the allocation of the $200 positive adjustment for Year 4 to T's preferred stock is not treated as an allocation for a period for which the preferred stock is owned by a nonmember. Thus, the $200 adjustment is reflected in S's basis in T's preferred stock under paragraph (b) of this section.

(d) *Definitions.* For purposes of this section—

(1) *Class.* The shares of a member having the same material terms (without taking into account voting rights) are treated as a single class of stock.

(2) *Preferred stock.* Preferred stock is stock that is limited and preferred as to dividends and has a liquidation preference. A class of stock that is not described in section 1504(a)(4), however, is not treated as preferred stock for purposes of paragraph (c) of this section if members own less than 80% of each class of common stock (determined without taking this paragraph (d)(2) into account).

(3) *Common stock.* Common stock is stock that is not preferred stock.

(4) *Becoming a nonmember.* A member is treated as becoming a nonmember if it has a separate return year (including another group's consolidated return year). For example, S may become a nonmember if it issues additional stock to nonmembers, but S does not become a nonmember as a result of its complete liquidation.

(e) *Anti-avoidance rule*—(1) *General rule.* If any person acts with a principal purpose contrary to the purposes of this section, to avoid the effect of the rules of this section or apply the rules of this section to avoid the effect of any other provision of the consolidated return regulations, adjustments must be made as necessary to carry out the purposes of this section.

(2) *Examples.* The principles of this paragraph (e) are illustrated by the following examples.

Example 1. Preferred stock treated as common stock. (a) *Facts.* S has 100 shares of common stock and 100 shares of preferred stock described in section 1504(a)(4). M owns 80 shares of S's common stock and all of S's preferred stock. The shareholders expect that S will have negative adjustments under paragraph (b) of this section for Years 1 and 2 (all of which will be allocable to S's common stock), the negative adjustments will have no significant effect on the value of S's stock, and S will have offsetting positive adjustments thereafter. When the preferred stock was issued, M intended to cause S to recapitalize the preferred stock into additional common stock at the end of Year 2 in a transaction described in section 368(a)(1)(E). M's temporary ownership of the preferred stock is with a principal purpose to limit M's basis reductions under paragraph (b) of this section to 80% of the anticipated negative adjustments. The recapitalization is intended to cause significantly more than 80% of the anticipated positive adjustments to increase M's basis in S's stock because of M's increased ownership of S's common stock immediately after the recapitalization.

(b) *Analysis.* S has established a transitory capital structure with a principal purpose to enhance M's basis in S's stock under this section. Under paragraph (e)(1) of this section, all of S's common and preferred stock is treated as a single class of common stock in Years 1 and 2 for purposes of this section. Thus, S's items are allocated under the principles of paragraph (c)(2)(ii) of this section, and M decreases its basis in both the common and preferred stock accordingly.

Example 2. Contribution of appreciated property. (a) *Facts.* M owns all of the stock of S and T, and S and T each own 50% of the stock of U. M's S stock has a $150 basis and $200 value, and M's T stock has a $200 basis and $200 value. With a principal purpose to eliminate M's gain from an anticipated sale of S's stock, T contributes to U an asset with a $100 value and $0 basis, and S contributes $100 cash. U sells T's asset and recognizes a $100 gain that results in a $100 positive adjustment under paragraph (b) of this section.

(b) *Analysis.* Under paragraph (c)(2) of this section, U's adjustment ordinarily would be allocated equally to each share of U's stock. If so allocated, M's basis in S's stock would increase from $150 to $200 and M would recognize no gain from the sale of S's stock for $200. Under paragraph (e)(1) of this section, however, because T transferred an appreciated asset to U with a principal purpose to shift a portion of the stock basis increase from M's stock in T to M's stock in S, the allocation of the $100 positive adjustment under paragraph (c) of this section between the shares of U's stock must take into account the contribution. Consequently, all $100 of the positive adjustment is allocated to the U stock owned by T, rather than $50 to the U stock owned by S and $50 to the U

stock owned by T. M's basis in S's stock remains $150, and its basis in T's stock increases to $300. Thus, M recognizes a $50 gain from its sale of S's stock for $200.

Example 3. Reorganizations. (a) *Facts.* M forms S with an $800 contribution, $200 of which is in exchange for S's preferred stock described in section 1504(a)(4) and the balance of which is for S's common stock. For Years 1 through 3, S has a total of $160 of ordinary income, $60 of which is distributed with respect to the preferred stock in satisfaction of its $20 annual preference as to dividends. Under this section, M's basis in S's preferred stock is unchanged, and its basis in S's common stock is increased from $600 to $700. To reduce its gain from an anticipated sale of S's preferred stock, M forms T at the close of Year 3 with a contribution of all of S's stock in exchange for corresponding common and preferred stock of T in a transaction to which section 351 applies. At the time of the contribution, the fair market value of the common stock is $700 and the fair market value of the preferred stock is $300 (due to a decrease in prevailing market interest rates). M subsequently sells T's preferred stock for $300.

(b) *Analysis.* Under section 358(b), M ordinarily has a $630 basis in T's common stock (70% of the $900 aggregate stock basis) and a $270 basis in T's preferred stock (30% of the $900 aggregate stock basis). However, because M transferred S's stock to T with a principal purpose to shift the allocation of basis adjustments under this section, adjustments are made under paragraph (e)(1) of this section to preserve the allocation under this section. Thus, M has a $700 basis in T's common stock and a $200 basis in T's preferred stock. Consequently, M recognizes a $100 gain from the sale of T's preferred stock.

Example 4. Post-deconsolidation basis adjustments. (a) *Facts.* For Year 1, the M group has $40 of taxable income when determined by including only S's items of income, gain, deduction, and loss taken into account, and M increases its basis in S's stock by $40 under paragraph (b) of this section. M anticipates that S will have a $40 ordinary loss for Year 2 that will be carried back and offset S's income in Year 1 and result in a $40 reduction to M's basis in S's stock for Year 2 under paragraph (b) of this section. With a principal purpose to avoid the reduction, M causes S to issue voting preferred stock that results in S becoming a nonmember at the beginning of Year 2. As anticipated, S has a $40 loss for Year 2, which is carried back to Year 1 and offsets S's income from Year 1.

(b) *Analysis.* Under paragraph (e)(1) of this section, because M caused S to become a nonmember with a principal purpose to absorb S's loss but avoid the corresponding negative adjustment under this section, and M bears a substantial portion of the loss because of its continued ownership of S common stock, the basis of M's common stock in S is decreased by $40 for Year 2. (If M has less than a $40 basis in the retained S stock, M must recognize income for Year 2 to the extent of the excess.) Section 1504(a)(3) limits the ability of S to subsequently rejoin the M group's consolidated return.

(c) *Carryback to pre-consolidation year.* The facts are the same as in paragraph (a) of this *Example 4*, except that M anticipates that S's loss will be carried back and absorbed in a separate return year of S before Year 1 (rather than to the M group's consolidated return for Year 1). Although M causes S to become a nonmember with a principal purpose to avoid the negative adjustment under this section, and M bears a substantial portion of the loss because of its continued ownership of S common stock, both S's income and loss are taken into account under the separate return rules. Consequently, no one has acted with a principal purpose contrary to the purposes of this section, and no adjustments are necessary to carry out the purposes of this section.

Example 5. Pre-consolidation basis adjustments. (a) *Facts.* M forms S with a $100 contribution, and S becomes a member of the M affiliated group which does not file consolidated returns. For Years 1 through 3, S earns $300. M anticipates that it will elect under section 1501 for the M group to begin filing consolidated returns in Year 5. In anticipation of filing consolidated returns, and to avoid the negative stock basis adjustment that would result under paragraph (b) of this section from distributing S's earnings after Year 5, M causes S to distribute $300 during Year 4 as a qualifying dividend within the meaning of section 243(b). There is no plan or intention to recontribute the funds to S after the distribution.

(b) *Analysis.* Although S's distribution of $300 is with a principal purpose to avoid a corresponding negative adjustment under this section, the $300 was both earned and distributed entirely under the separate return rules. Consequently, M and S have not acted with a principal purpose contrary to the purposes of this section, and no adjustments are necessary to carry out the purposes of this section.

(f) *Predecessors and successors.* For purposes of this section, any reference to a corporation or to a share of stock includes a reference to a successor or predecessor as the context may require. A corporation is a successor if the basis of its assets is determined, directly or indirectly, in whole or in part, by reference to the basis of another corporation (the predecessor). For example, if T merges into S, S is treated, as the context may require, as a successor to T and as becoming a

member of the group. A share is a successor if its basis is determined, directly or indirectly, in whole or in part, by reference to the basis of another share (the predecessor).

(g) *Recordkeeping*. Adjustments under this section must be reflected annually on permanent records (including work papers). See also section 6001, requiring records to be maintained. The group must be able to identify from these permanent records the amount and allocation of adjustments, including the nature of any tax-exempt income and noncapital, nondeductible expenses, so as to permit the application of the rules of this section for each year.

(h) *Effective/applicability date*—(1) *General rule*. Except as provided in paragraph (h)(8) of this section, this section applies with respect to determinations of the basis of the stock of a subsidiary (e.g., for determining gain or loss from a disposition of stock), in consolidated return years beginning on or after January 1, 1995. If this section applies, basis must be determined or redetermined as if this section were in effect for all years (including, for example, the consolidated return years of another consolidated group to the extent adjustments from those years are still reflected). For example, if the portion of a consolidated net operating loss carryover attributable to S expired in 1990 and is treated as a noncapital, nondeductible expense under paragraph (b) of this section, it is taken into account in tax years beginning on or after January 1, 1995 as a negative adjustment for 1990. Any such determination or redetermination does not, however, affect any prior period. Thus, the negative adjustment for S's noncapital, nondeductible expense is not taken into account for tax years beginning before January 1, 1995.

(2) *Dispositions of stock before effective date*—(i) *In general*. If M disposes of stock of S in a consolidated return year beginning before January 1, 1995, the amount of M's income, gain, deduction, or loss, and the basis reflected in that amount, are not redetermined under this section. See §1.1502–19 as contained in the 26 CFR part 1 edition revised as of April 1, 1994 for the definition of disposition, and paragraph (h)(5) of this section for the rules applicable to such dispositions.

(ii) *Lower-tier members*. Although M disposes of S's stock in a tax year beginning before January 1, 1995, S's determinations or adjustments with respect to the stock of a lower-tier member with which it continues to file a consolidated return are redetermined in accordance with the rules of this section (even if they were previously taken into account by M and reflected in income, gain, deduction, or loss from the disposition of S's stock). For example, assume that M owns all of S's stock, S owns all of T's stock, and T owns all of U's stock. If S sells 80% of T's stock in a tax year beginning before January 1, 1995 (the effective date), the amount of S's income, gain, deduction, or loss from the sale, and the stock basis adjustments reflected in that amount, are not redetermined if M sells S's stock after the effective date. If S sells the remaining 20% of T's stock after the effective date, S's stock basis adjustments with respect to that T stock are also not redetermined because T became a nonmember before the effective date. However, if T and U continue to file a consolidated return with each other and T sells U's stock after the effective date, T's stock basis adjustments with respect to U's stock are redetermined (even though some of those adjustments may have been taken into account by S in its prior sale of T's stock before the effective date).

(iii) *Deferred amounts*. For purposes of this paragraph (h)(2), a disposition does not include a transaction to which §1.1502–13, §1.1502–13T, §1.1502–14, or §1.1502–14T applies. Instead, the transaction is deemed to occur as the income, gain, deduction, or loss (if any) is taken into account.

(3) *Distributions*—(i) *Deemed dividend elections*. If there is a deemed distribution and recontribution pursuant to §1.1502–32(f)(2) as contained in the 26 CFR part 1 edition revised as of April 1, 1994 in a consolidated return year beginning before January 1, 1995, the deemed distribution and recontribution under the election are treated as an actual distribution by S and recontribution by M as provided under the election.

(ii) *Affiliated earnings and profits.* This section does not apply to reduce the basis in S's stock as a result of a distribution of earnings and profits accumulated in separate return years, if the distribution is made in a consolidated return year beginning before January 1, 1995, and the distribution does not cause a negative adjustment under the investment adjustment rules in effect at the time of the distribution. See paragraph (h)(5) of this section for the rules in effect with respect to the distribution.

(4) *Expiring loss carryovers.* If S became a member of a consolidated group in a consolidated return year beginning before January 1, 1995, and S had a loss carryover from a separate return limitation year at that time, the group does not treat any expiration of the loss carryover (even if in a tax year beginning on or after January 1, 1995) as a noncapital, nondeductible expense resulting in a negative adjustment under this section. If S becomes a member of a consolidated group in a consolidated return year beginning on or after January 1, 1995, and S has a loss carryover from a separate return limitation year at that time, adjustments with respect to the expiration are determined under this section.

(5) *Prior law*—(i) *In general.* For prior determinations, see prior regulations under section 1502 as in effect with respect to the determination. See, e.g., §§ 1.1502–32 and 1.1502–32T as contained in the 26 CFR part 1 edition revised as of April 1, 1994.

(ii) *Continuing basis reductions for certain deconsolidated subsidiaries.* If a subsidiary ceases to be a member of a group in a consolidated return year beginning before January 1, 1995, and its basis was subject to reduction under § 1.1502–32T or § 1.1502–32(g) as contained in the 26 CFR part 1 edition revised as of April 1, 1994, its basis remains subject to reduction under those principles. For example, if S ceased to be a member in 1990, and M's basis in any retained S stock was subject to a basis reduction account, the basis remains subject to reduction. Similarly, if an election could be made to apply § 1.1502–32T instead of § 1.1502–32(g), the election remains available. However, §§ 1.1502–32T and 1.1502–32(g) do not apply as a result of a subsidiary ceasing to be a member in tax years beginning on or after January 1, 1995.

(6) *Loss suspended under § 1.1502–35(c) or disallowed under § 1.1502–35(g)(3)(iii).* Paragraphs (a)(2), (b)(3)(iii)(C), (b)(3)(iii)(D), and (b)(4)(vi) of this section are applicable on and after March 10, 2006. For rules applicable before March 10, 2006, see § 1.1502–32T(h)(6) as contained in 26 CFR part 1 in effect on January 1, 2006.

(7) *Rules related to discharge of indebtedness income excluded from gross income.* Paragraphs (b)(1)(ii), (b)(3)(ii)(C)(*1*), (b)(3)(iii)(A), and (b)(5)(ii), *Example 4,* paragraphs (a), (b), and (c) of this section apply with respect to determinations of the basis of the stock of a subsidiary in consolidated return years the original return for which is due (without regard to extensions) after March 21, 2005. However, groups may apply those provisions with respect to determinations of the basis of the stock of a subsidiary in consolidated return years the original return for which is due (without regard to extensions) on or before March 21, 2005, and after August 29, 2003. For determinations of the basis of the stock of a subsidiary in consolidated return years the original return for which is due (without regard to extensions) on or before March 21, 2005, and after August 29, 2003, with respect to which a group chooses not to apply paragraphs (b)(1)(ii), (b)(3)(ii)(C)(*1*), (b)(3)(iii)(A), and (b)(5)(ii), *Example 4,* paragraphs (a), (b), and (c) of this section, see § 1.1502–32T(b)(3)(ii)(C)(*1*), (b)(3)(iii)(A), and (b)(5)(ii), *Example 4,* paragraphs (a), (b), and (c) as contained in 26 CFR part 1 revised as of April 1, 2004.

(8) *Determination of stock basis in reorganization with boot.* Paragraph (b)(5)(ii) *Example 6* of this section applies only with respect to determinations of the basis of the stock of a subsidiary on or after January 23, 2006. For determinations of the basis of the stock of a subsidiary before January 23, 2006, see § 1.1502–32(b)(5)(ii) *Example 6* as contained in the 26 CFR part 1 edition revised as of April 1, 2005.

(9) *Allocations of investment adjustments, including adjustments attributable to certain loss transfers; certain conforming amendments.* Paragraphs (a)(2),

(b)(3)(ii)(C)(*2*), (c)(1), (c)(2)(i), (c)(2)(ii)(A), (c)(3), and (c)(4)(i) of this section are applicable for determinations of the basis of stock of a subsidiary on or after September 17, 2008.

(i) [Reserved]. For further guidance, see § 1.1502–32T(i) through (j)(1).

(j) *Effective/applicability date.* Paragraph (b)(4)(iv) of this section applies to any original consolidated Federal income tax return due (without extensions) after June 14, 2007. For original consolidated Federal income tax returns due (without extensions) after May 30, 2006, and on or before June 14, 2007, see § 1.1502–32T as contained in 26 CFR part 1 in effect on April 1, 2007. For original consolidated Federal income tax returns due (without extensions) on or before May 30, 2006, see § 1.1502–32 as contained in 26 CFR part 1 in effect on April 1, 2006.

(k) [Reserved]. For further guidance, see § 1.1502–32T(k).

[T.D. 8560, 59 FR 41685, Aug. 15, 1994]

EDITORIAL NOTE: For FEDERAL REGISTER citations affecting § 1.1502–32, see the List of CFR Sections Affected, which appears in the Finding Aids section of the printed volume and at *www.fdsys.gov*.

§ 1.1502–33 Earnings and profits.

(a) *In general*—(1) *Purpose.* This section provides rules for adjusting the earnings and profits of a subsidiary (S) and any member (P) owning S's stock. These rules modify the determination of P's earnings and profits under applicable rules of law, including section 312, by adjusting P's earnings and profits to reflect S's earnings and profits for the period that S is a member of the consolidated group. The purpose for modifying the determination of earnings and profits is to treat P and S as a single entity by reflecting the earnings and profits of lower-tier members in the earnings and profits of higher-tier members and consolidating the group's earnings and profits in the common parent. References in this section to earnings and profits include deficits in earnings and profits.

(2) *Application of other rules of law, duplicative adjustments.* See § 1.1502–80(a) regarding the general applicability of other rules of law and a limitation on duplicative adjustments. The rules of this section are in addition to other rules of law. For example, the allowance for depreciation is determined in accordance with section 312(k). P's earnings and profits must not be adjusted under this section and other rules of law in a manner that has the effect of duplicating an adjustment. For example, if S's earnings and profits are reflected in P's earnings and profits under paragraph (b) of this section, and S transfers its assets to P in a liquidation to which section 332 applies, S's earnings and profits that P succeeds to under section 381 must be adjusted to prevent duplication.

(b) *Tiering up earnings and profits*—(1) *General rule.* P's earnings and profits are adjusted under this section to reflect changes in S's earnings and profits in accordance with the applicable principles of § 1.1502–32, consistently applied, and an adjustment to P's earnings and profits for a tax year under this paragraph (b)(1) is treated as earnings and profits of P for the tax year in which the adjustment arises. Under these principles, for example, the adjustments are made as of the close of each consolidated return year, and as of any other time if a determination at that time is necessary to determine the earnings and profits of any person. Similarly, S's earnings and profits are allocated under the principles of § 1.1502–32(c), and the adjustments are applied in the order of the tiers, from the lowest to the highest. However, modifications to the principles include:

(i) The amount of P's adjustment is determined by reference to S's earnings and profits, rather than S's taxable and tax-exempt items (and therefore, for example, the deferral of a negative adjustment for S's unabsorbed losses does not apply).

(ii) The tax sharing rules under paragraph (d) of this section apply rather than those of § 1.1502–32(b)(3)(iv)(D).

(2) *Affiliated earnings and profits.* The reduction in S's earnings and profits under section 312 from a distribution of earnings and profits accumulated in separate return years of S that are not separate return limitation years does not tier up to P's earnings and profits. Thus, the increase in P's earnings and profits under section 312 from receipt of the distribution is not offset by a corresponding reduction.

(3) *Examples*—(i) *In general*. For purposes of the examples in this section, unless otherwise stated, P owns all of the only class of S's stock, the stock is owned for the entire year, S owns no stock of lower-tier members, the tax year of all persons is the calendar year, all persons use the accrual method of accounting, the facts set forth the only corporate activity, preferred stock is described in section 1504(a)(4), all transactions are between unrelated persons, and tax liabilities are disregarded.

(ii) *Tiering up earnings and profits*. The principles of this paragraph (b) are illustrated by the following examples.

Example 1. Tier-up and distribution of earnings and profits. (a) *Facts*. P forms S in Year 1 with a $100 contribution. S has $100 of earnings and profits for Year 1 and no earnings and profits for Year 2. During Year 2, S declares and distributes a $50 dividend to P.

(b) *Analysis*. Under paragraph (b)(1) of this section, S's $100 of earnings and profits for Year 1 increases P's earnings and profits for Year 1. P has no additional earnings and profits for Year 2 as a result of the $50 distribution in Year 2, because there is a $50 increase in P's earnings and profits as a result of the receipt of the dividend and a corresponding $50 decrease in S's earnings and profits under section 312(a) that is reflected in P's earnings and profits under paragraph (b)(1) of this section.

(c) *Distribution of current earnings and profits*. The facts are the same as in paragraph (a) of this *Example 1*, except that S distributes the $50 dividend at the end of Year 1 rather than during Year 2. Under paragraph (b)(1) of this section, P's earnings and profits are increased by $100 (S's $50 of undistributed earnings and profits, plus P's receipt of the $50 distribution). Thus, S's earnings and profits increase by $50 and P's earnings and profits increase by $100.

(d) *Affiliated earnings and profits*. The facts are the same as in paragraph (a) of this *Example 1*, except that P and S do not begin filing consolidated returns until Year 2. Because P and S file separate returns for Year 1, P's basis in S's stock remains $100 under § 1.1502–32 and this section, S has $100 of earnings and profits, and none of S's earnings and profits is reflected in P's earnings and profits under paragraph (b) of this section. S's distribution in Year 2 ordinarily would reduce S's earnings and profits but not increase P's earnings and profits. (P's $50 of earnings and profits from the dividend would be offset by S's $50 reduction in earnings and profits that tiers up under paragraph (b) of this section.) However, under paragraph (b)(2) of this section, the negative adjustment for S's distribution to P does not apply. Thus, S's distribution reduces its earnings and profits by $50 but increases P's earnings and profits by $50. (If S's earnings and profits had been accumulated in a separate return limitation year, paragraph (b)(2) of this section would not apply and the distribution would reduce S's earnings and profits but not increase P's earnings and profits.)

(e) *Earnings and profits deficit*. Assume instead that after P forms S in Year 1 with a $100 contribution, S borrows additional funds and has a $150 deficit in earnings and profits for Year 1. The corresponding loss for tax purposes is not absorbed in Year 1, and is included in the group's consolidated net operating loss carried forward to Year 2. Under paragraph (b)(1) of this section, however, S's $150 deficit in earnings and profits decreases P's earnings and profits for Year 1 by $150. (Absorption of the loss in a later tax year has no effect on the earnings and profits of P and S.)

Example 2. Section 355 distribution. (a) *Facts*. P owns all of S's stock and S owns all of T's stock. For Year 1, T has $100 of earnings and profits. Under paragraph (b)(1) of this section, the earnings and profits of T tier up to S and to P. S and P have no other earnings and profits for Year 1. S distributes T's stock to P at the end of Year 1 in a distribution to which section 355 applies.

(b) *Analysis*. Because S's distribution of T's stock is a distribution to which section 355 applies, the applicable principles of § 1.1502–32(b)(2)(iv) do not require P's earnings and profits to be adjusted by reason of the distribution. In addition, although S's earnings and profits may be reduced under section 312(h) as a result of the distribution, the applicable principles of § 1.1502–32(b)(3)(iii) do not require P's earnings and profits to be adjusted to reflect this reduction in S's earnings and profits.

Example 3. Allocating earnings and profits among shares. P owns 80% of S's stock throughout Year 1. For Year 1, S has $100 of earnings and profits. Under paragraph (b)(1) of this section, $80 of S's earnings and profits is allocated to P based on P's ownership of S's stock. Accordingly, $80 of S's earnings and profits for Year 1 is reflected in P's earnings and profits for Year 1.

(c) *Special rules*. For purposes of this section—

(1) *Stock of members*. For purposes of determining P's earnings and profits from the disposition of S's stock, P's basis in S's stock is adjusted to reflect S's earnings and profits determined under paragraph (b) of this section, rather than under § 1.1502–32. For example, P's basis in S's stock is increased by positive earnings and profits and decreased by deficits in earnings and

profits. Similarly, P's basis in S's stock is not reduced for distributions to which paragraph (b)(2) of this section applies (affiliated earnings and profits). P may have an excess loss account in S's stock for earnings and profits purposes (whether or not there is an excess loss account under §1.1502–32), and the excess loss account is determined, adjusted, and taken into account in accordance with the principles of §§1.1502–19 and 1.1502–32.

(2) *Intercompany transactions*. Intercompany items and corresponding items are not reflected in earnings and profits before they are taken into account under §1.1502–13. See §1.1502–13 for the applicable rules and definitions.

(3) *Example*. The principles of this paragraph (c) are illustrated by the following example.

Example. Adjustments to stock basis. (a) *Facts.* P forms S in Year 1 with a $100 contribution. For Year 1, S has $75 of taxable income and $100 of earnings and profits. For Year 2, S has no taxable income or earnings and profits, and S declares and distributes a $50 dividend to P. P sells all of S's stock for $150 at the end of Year 2.

(b) *Analysis.* Under paragraph (c)(1) of this section, P's basis in S's stock for earnings and profits purposes immediately before the sale is $150 (the $100 initial basis, plus S's $100 of earnings and profits for Year 1, minus the $50 distribution of earnings and profits in Year 2). Thus, P recognizes no gain or loss from the sale of S's stock for earnings and profits purposes.

(c) *Earnings and profits deficit.* Assume instead that S has a $100 tax loss and earnings and profits deficit for Year 1. The tax loss is not absorbed in Year 1 and is included in the group's consolidated net operating loss carried forward to Year 2. Under paragraph (b) of this section, S's $100 deficit in earnings and profits decreases P's earnings and profits for Year 1. Under paragraph (c) of this section, P decreases its basis in S's stock for purposes of determining earnings and profits from $100 to $0. (If S had borrowed an additional $50 that it also lost in Year 1, P would have decreased its earnings and profits for Year 1 by the additional $50, and P would have had a $50 excess loss account in S's stock for earnings and profits purposes, which would be taken into account in determining P's earnings and profits from its sale of S's stock.)

(d) *Affiliated earnings and profits.* Assume instead that P and S do not begin filing consolidated returns until Year 2. Under paragraph (b) of this section, the negative adjustment under §1.1502–32(b) for distributions does not apply to S's distribution of earnings and profits accumulated in a separate return year that is a not separate return limitation year. Thus, P's basis in S's stock for earnings and profits purposes remains $100, and P has $50 of earnings and profits from the sale of S's stock.

(d) *Federal income tax liability*—(1) *In general*—(i) *Extension of tax allocations.* Section 1552 allocates the tax liability of a consolidated group among its members for purposes of determining the amounts by which their earnings and profits are reduced for taxes. Section 1552 does not reflect the absorption by one member of another member's tax attributes (e.g., losses, deductions and credits). For example, if P's $100 of income is offset by S's $100 of deductions, consolidated tax liability is $0 and no amount is allocated under section 1552. However, the group may elect under this paragraph (d) to allocate additional amounts to reflect the absorption by one member of the tax attributes of another member. Permissible methods are set forth in paragraphs (d)(2) through (4) of this section, and election procedures are provided in paragraph (d)(5) of this section. Allocations under this paragraph (d) must be reflected annually on permanent records (including work papers). Any computations of separate return tax liability are subject to the principles of section 1561.

(ii) *Effect of extended tax allocations.* The amounts allocated under this paragraph (d) are treated as allocations of tax liability for purposes of §1.1552–1(b)(2). For example, if P's taxable income is offset by S's loss, and tax liability is allocated under the percentage method of paragraph (d)(3) of this section, P's earnings and profits are reduced as if its income were subject to tax, P is treated as liable to S for the amount of the tax, and corresponding adjustments are made to S's earnings and profits. If the liability of one member to another is not paid, the amount not paid generally is treated as a distribution, contribution, or both, depending on the relationship between the members.

(2) *Wait-and-see method.* The wait-and-see method under this paragraph (d)(2) is derived from Securities and Exchange Commission procedures. In the year that a member's tax attribute

is absorbed, the group's consolidated tax liability is allocated in accordance with the group's method under section 1552. When, in effect, the member with the tax attribute could have absorbed the attribute on a separate return basis in a later year, a portion of the group's consolidated tax liability for the later year that is otherwise allocated to members under section 1552 is reallocated. The reallocation takes into account all consolidated return years to which this paragraph (d) applies (the computation period), and is determined by comparing the tax allocated to a member during the computation period with the member's tax liability determined as if it had filed separate returns during the computation period.

(i) *Cap on allocation under section 1552.* A member's allocation under section 1552 for a tax year may not exceed the excess, if any, of—

(A) The total of the tax liabilities of the member for the computation period (including the current year), determined as if the member had filed separate returns; over

(B) The total amount allocated to the member under section 1552 and this paragraph (d) for the computation period (except the current year).

(ii) *Reallocation of capped amounts.* To the extent that the amount allocated to a member under section 1552 exceeds the limitation under paragraph (d)(2)(i) of this section, the excess is allocated among the remaining members in proportion to (but not to exceed the amount of) each member's excess, if any, of—

(A) The total of the tax liabilities of the member for the computation period (including the current year), determined as if the member had filed separate returns; over

(B) The total amount allocated to the member under section 1552 and this paragraph (d) for the computation period (including for the current year only the amount allocated under section 1552).

(iii) *Reallocation of excess capped amounts.* If the reductions under paragraph (d)(2)(i) of this section exceed the amounts allocable under paragraph (d)(2)(ii) of this section, the excess is allocated among the members in accordance with the group's method under section 1552 without taking this paragraph (d)(2) into account.

(3) *Percentage method.* The percentage method under this paragraph (d)(3) allocates tax liability based on the absorption of tax attributes, without taking into account the ability of any member to subsequently absorb its own tax attributes. The allocation under this method is in addition to the allocation under section 1552.

(i) *Decreased earnings and profits.* A member's allocation under section 1552 for any year is increased, thereby decreasing its earnings and profits, by a fixed percentage (not to exceed 100%) of the excess, if any, of—

(A) The member's separate return tax liability for the consolidated return year as determined under §1.1552–1(a)(2)(ii); over

(B) The amount allocated to the member under section 1552.

(ii) *Increased earnings and profits.* An amount equal to the total decrease in earnings and profits under paragraph (d)(3)(i) of this section (including amounts allocated as a result of a carryback) increases the earnings and profits of the members whose attributes are absorbed, and is allocated among them in a manner that reasonably reflects the absorption of the tax attributes.

(4) *Additional methods.* The absorption by one member of the tax attributes of another member may be reflected under any other method approved in writing by the Commissioner.

(5) *Election of allocation method*—(i) *In general.* Tax liability may be allocated under this paragraph (d) only if an election is filed with the group's first return. The election must—

(A) Be made in a separate statement entitled ''ELECTION TO ALLOCATE TAX LIABILITY UNDER §1.1502–33(d)'';

(B) State the allocation method elected under §1.1502–33(d) and under section 1552;

(C) If the percentage method is elected, state the percentage (not to exceed 100%) to be used; and

(D) If a method is permitted under paragraph (d)(4) of this section, provide

the date and control number of the private letter ruling issued by the Internal Revenue Service approving such method.

(ii) *Consent*—(A) *Electing or changing methods*. An election for a later year, or an election to change methods, may be made only with the written consent of the Commissioner.

(B) *Prior law elections*. An election in effect for the last tax year beginning before January 1, 1995, remains in effect under this section. However, a group may elect to conform its earnings and profits computations to the method described in §1.1502–32(b)(3)(iv)(D) (the percentage method, using a 100% allocation), whether or not it has previously made an election for earnings and profits purposes. If a conforming election is made, the group must make all adjustments necessary to prevent amounts from being duplicated or omitted. The conforming election is made by attaching a statement entitled ''ELECTION TO CONFORM TAX ALLOCATIONS UNDER §§1.1502–32 and 1.1502–33(d)'' to the consolidated group's return for its first tax year beginning on or after January 1, 1995. The statement must be signed by the common parent, and must specify whether the method is conformed only for years beginning on or after January 1, 1995 or as if the method were in effect for all prior years. The statement must also describe the adjustments made by reason of the change (e.g., to reflect prior use of earnings and profits).

(6) *Examples*. The principles of this paragraph (d) are illustrated by the following examples.

Example 1. Wait-and-see method. (a) *Facts*. P owns all of the stock of S1 and S2. The P group uses the wait-and-see method of allocation under paragraph (d)(2) of this section in conjunction with §1.1552–1(a)(1). For Year 1, each member's taxable income, both for purposes of §1.1552–1(a)(1) and redetermined as if the member had filed separate returns, is as follows: P $0, S1 $2,000, and S2 ($1,000). Thus, the P group's consolidated tax liability for Year 1 is $340 (assuming a 34% tax rate).

(b) *Analysis*. Under §1.1552–1(a)(1)(i), the tax liability of the P group is allocated among the members in accordance with the portion of the consolidated taxable income attributable to each member having taxable income. Thus, all of the P group's $340 consolidated tax liability is allocated to S1. As a result, S1 decreases its earnings and profits under section 1552 by $340 (even if S1 does not pay the tax liability). No further allocations are made under paragraph (d)(2) of this section because S2 cannot yet absorb its loss on a separate return basis.

(c) *Payment of tax liability*. If S1 pays the $340 tax liability, there is no further effect on the income, earnings and profits, or stock basis of any member. If P pays the $340 tax liability (and the payment is not a loan from P to S1), P is treated as making a $340 contribution to the capital of S1; if S2 pays the $340 tax liability (and the payment is not a loan from S2 to S1), S2 is treated as making a $340 distribution to P with respect to its stock, and P is treated as making a $340 contribution to the capital of S1. See §1.1552–1(b)(2).

(d) *Year 2*. For Year 2, each member's taxable income, under §1.1552–1(a)(1)(ii) and redetermined as if the member had filed separate returns, without taking into account any carryover from Year 1, is as follows: P $0, S1 $1,000, and S2 $3,000. Thus, the P group's consolidated tax liability for Year 2 is $1,360 (assuming a 34% tax rate). Of this amount, section 1552 would allocate $340 to S1 and $1,020 to S2. However, under paragraph (d)(2)(i) of this section, no more than $680 may be allocated to S2. This is because S2 would have had an aggregate tax liability of $680 if it had filed separate returns for Years 1 and 2 (a $0 tax liability for Year 1, and a $680 tax liability for Year 2, taking into account a $1,000 net operating loss carryover from Year 1). Under paragraph (d)(2)(ii) of this section, the entire excess of $340 which would otherwise be allocated to S2 under §1.1552–1(a)(1) is allocated to S1. This is because S1 would have had an additional $340 of aggregate tax liability if it had filed separate returns for Years 1 and 2 (a $680 tax liability for Year 1, and a $340 tax liability for Year 2, not taking into account S2's $1,000 net operating loss for Year 1). The effect of the allocation of $680 to S1 and $680 to S2 is determined under §1.1552–1(b)(2).

Example 2. Percentage method. (a) *Facts*. The facts are the same as in *Example 1*, but the P group uses the percentage method of allocation under paragraph (d)(3) of this section, with a percentage of 100%. In addition, the taxable incomes and losses of the members are the same if computed as provided in §1.1552–1(a)(2)(ii).

(b) *Analysis*. Under §1.1552–1(a)(2)(ii), $340 of tax liability is allocated to S1 for Year 1. Under paragraph (d)(3)(i) of this section, S1 is allocated another $340 of tax liability because S1 would have had a $680 tax liability if it had filed separate returns but only $340 is allocated to S1 under section 1552. Thus, S1's earnings and profits are decreased by the $680 total. Under paragraph (d)(3)(ii) of this section, S2's earnings and profits are increased by $340 because the additional $340

allocated to S1 under paragraph (d)(3)(i) of this section is attributable to the absorption of S2's losses.

(c) *Payment of tax liability*. If S1 pays the $340 tax liability of the P group and pays $340 to S2, the Year 1 tax liability results in no further adjustments to the income, earnings and profits, or basis of any member's stock. If S1 pays the $340 tax liability of the P group and pays the other $340 to P instead of S2 because, for example, of an agreement among the members, S2 is treated as distributing $340 to P with respect to its stock in the year that S1 makes the payment to P. See § 1.1552–1(b)(2).

(d) *Year 2*. For Year 2, $340 is allocated to S1 and $1,020 is allocated to S2 under section 1552. No additional amounts are allocated under paragraph (d)(3) of this section.

(e) *Deconsolidations*—(1) *In general*. Immediately before it becomes a nonmember, S's earnings and profits are eliminated to the extent they were taken into account by any member under this section. If S's earnings and profits are eliminated under this paragraph (e)(1), no corresponding adjustment is made to the earnings and profits of P (or any other member) under paragraph (b) of this section or to any basis in a member's stock under paragraph (c) of this section. For this purpose, S is treated as becoming a nonmember on the first day of its first separate return year (including another group's consolidated return year).

(2) *Acquisition of group*—(i) *Application*. This paragraph (e)(2) applies only if a consolidated group (the terminating group) ceases to exist as a result of—

(A) The acquisition of either the assets of the common parent of the terminating group in a reorganization described in section 381(a)(2), or the stock of the common parent of the terminating group; or

(B) The application of the principles of § 1.1502–75(d)(2) or (d)(3).

(ii) *General rule*. Paragraph (e)(1) of this section does not apply solely by reason of the termination of a group because it is acquired, if there is a surviving group that is, immediately thereafter, a consolidated group. Instead, the surviving group is treated as the terminating group for purposes of applying this paragraph (e) to the terminating group. This treatment does not apply, however, to members of the terminating group that are not members of the surviving consolidated group immediately after the terminating group ceases to exist (e.g., under section 1504(a)(3) relating to reconsolidation, or section 1504(c) relating to includible insurance companies).

(3) *Certain corporate separations and reorganizations*. The adjustments under paragraph (e)(1) of this section must be modified to the extent necessary to effectuate the principles of section 312(h). Thus, P's earnings and profits rather than S's earnings and profits may be eliminated immediately before S becomes a nonmember. P's earnings and profits are eliminated to the extent that its earnings and profits reflect S's earnings and profits after applying section 312(h) immediately after S becomes a nonmember (determined without taking this paragraph (e) into account).

(4) *Special uses of earnings and profits*. Paragraph (e)(1) of this section does not apply for purposes of determining—

(i) The extent to which a distribution is charged to reserve accounts under section 593(e);

(ii) The extent to which a distribution is taxable to the recipient under sections 805(a)(4) and 832; and

(iii) Any other special use identified in guidance published in the Internal Revenue Bulletin.

(5) *Example*. The principles of this paragraph (e) are illustrated by the following example.

Example. (a) *Facts*. Individuals A and B own all of P's stock, and P owns all of the stock of S and T, each with a $500 basis. For Year 1, S has $100 of earnings and profits and T has $50 of earnings and profits. Under paragraph (b)(1) of this section, the earnings and profits of S and T tier up to P, and P has $150 of earnings and profits for Year 1. P sells all of S's stock for $600 at the close of Year 1.

(b) *Analysis*. Under paragraph (e)(1) of this section, S's $100 of earnings and profits is eliminated immediately before S becomes a nonmember because the earnings and profits are taken into account under paragraph (b) of this section in P's earnings and profits. However, no corresponding adjustment is made to P's earnings and profits or to P's basis in S's stock for purposes of earnings and profits. P's earnings and profits for Year 1 remain $150 following the sale of S's stock.

(c) *Forward merger*. The facts are the same as in paragraph (a) of this *Example*, except that, rather than P selling S's stock, S merges into a nonmember in a transaction

described in section 368(a)(2)(D). Under paragraph (h) of this section, the nonmember is treated as a successor to S. Thus, as in paragraph (b) of this *Example*, S's $100 of earnings and profits is eliminated immediately before S ceases to be a member.

(d) *Acquisition of entire group*. The facts are the same as in paragraph (a) of this *Example*, except that X, the common parent of another consolidated group, purchases all of P's stock at the close of Year 1, and P sells S's stock during Year 3. Under paragraph (e)(2) of this section, the earnings and profits of S and T are not eliminated as a result of X purchasing P's stock. However, S's earnings and profits from consolidated return years of both the P group and the X group are eliminated immediately before S becomes a nonmember of the X group.

(e) *Earnings and profits deficit*. The facts are the same as in paragraph (d) of this *Example*, except that S has a $550 deficit in earnings and profits for Year 1. The effect of paragraph (e)(1) of this section is the same. Under paragraph (c)(1) of this section, P would have an excess loss account in S's stock for earnings and profits purposes under the principles of §§1.1502–19 and 1.1502–32, and, under the principles of §1.1502–19(c)(2), the excess loss account is not taken into account as a result of X's purchase of P's stock. Under paragraph (e)(2) of this section, S's deficit is not eliminated under paragraph (e)(1) of this section immediately before X's purchase of P's stock. However, S's earnings and profits (or deficit) is eliminated immediately before S becomes a nonmember of the X group.

(f) *Section 355 distribution*. The facts are the same as in paragraph (a) of this *Example*, except that, rather than selling S's stock, P distributes S's stock to A at the close of Year 1 in a distribution to which section 355 applies. Under paragraph (e)(3) of this section, P's earnings and profits may be reduced under section 312(h) as a result of the distribution. To the extent that P's earnings and profits are reduced, S's earnings and profits are not eliminated under paragraph (e)(1) of this section.

(f) *Changes in the structure of the group*—(1) *Changes in the common parent*—(i) *General rule*. If P succeeds another corporation under the principles of §1.1502–75(d) (2) or (3) as the common parent of a consolidated group (a group structure change), the earnings and profits of P are adjusted immediately after P becomes the new common parent to reflect the earnings and profits of the former common parent immediately before the former common parent ceases to be the common parent. The adjustment is made as if P succeeds to the earnings and profits of the former common parent in a transaction described in section 381(a). See §1.1502–31 for the basis of the stock of members following a group structure change.

(ii) *Minority shareholders*. If the former common parent's stock is not wholly owned by members of the consolidated group immediately after the former common parent ceases to be the common parent, appropriate adjustments must be made to reflect in the new common parent only an allocable part of the former common parent's earnings and profits.

(iii) *Higher-tier members*. To the extent that earnings and profits are adjusted under this paragraph (f)(1), and the former common parent is owned by members other than P, the earnings and profits of the intermediate subsidiaries must be adjusted in accordance with the principles of this section.

(iv) *Example*. The principles of this paragraph (f)(1) are illustrated by the following example.

Example. (a) *Facts*. X is the common parent of a consolidated group with $100 of earnings and profits, and P is the common parent of another consolidated group with $20 of earnings and profits. P acquires all of X's stock at the close of Year 1 in exchange for 70% of P's stock. The exchange is a reverse acquisition under §1.1502–75(d)(3), and the X group is treated as remaining in existence with P as its new common parent.

(b) *Adjustments for X group earnings and profits*. Under paragraph (f)(1) of this section, P's earnings and profits are adjusted immediately after P becomes the new common parent, to reflect X's $100 of earnings and profits immediately before X ceases to be the common parent. The adjustment is made as if P succeeds to X's earnings and profits in a transaction described in section 381(a). Thus, immediately after the acquisition, P has $120 of accumulated earnings and profits and X continues to have $100 of accumulated earnings and profits.

(c) *Adjustments for P group earnings and profits*. Although the P group terminates on P's acquisition of X's stock, under paragraph (e)(2) of this section, no adjustments are made to the earnings and profits of any subsidiaries in the terminating P group.

(d) *Acquisition of separate return corporation*. The facts are the same as in paragraph (a) of this *Example*, except that, immediately before the acquisition of its stock by P, X is not affiliated with any other corporation. The exchange is a reverse acquisition under §1.1502–75(d)(3), and P is treated as the common parent of the X group. Consequently,

the results are the same as in paragraphs (b) and (c) of this *Example*.

(2) *Change in the location of subsidiaries*. If the location of a member within a group changes, appropriate adjustments must be made to the earnings and profits of the members to prevent the earnings and profits from being eliminated. For example, if P transfers all of S's stock to another member in a transaction to which section 351 and §1.1502–13 apply, the transferee's earnings and profits are adjusted immediately after the transfer to reflect S's earnings and profits immediately before the transfer from consolidated return years. On the other hand, if the transferee purchases S's stock from P, the transferee's earnings and profits are not adjusted.

(g) *Anti-avoidance rule*. If any person acts with a principal purpose contrary to the purposes of this section, to avoid the effect of the rules of this section or apply the rules of this section to avoid the effect of any other provision of the consolidated return regulations, adjustments must be made as necessary to carry out the purposes of this section.

(h) *Predecessors and successors*. For purposes of this section, any reference to a corporation or to a share includes a reference to a successor or predecessor as the context may require. A corporation is a successor if its earnings and profits are determined, directly or indirectly, in whole or in part, by reference to the earnings and profits of another corporation (the predecessor). A share is a successor if its basis is determined, directly or indirectly, in whole or in part, by reference to the basis of another share (the predecessor).

(i) [Reserved]

(j) *Effective/applicability date*—(1) *General rule*. This section applies with respect to determinations of the earnings and profits of a member (e.g., for purposes of a characterizing a distribution to which section 301 applies) in consolidated return years beginning on or after January 1, 1995. If this section applies, earnings and profits must be determined or redetermined as if this section were in effect for all years (including, for example, the consolidated return years of another consolidated group to the extent the earnings and profits from those years are still reflected). For example, if a distribution by P to a nonmember shareholder in 1990 was a dividend because of an unabsorbed loss carryover attributable to S, P's earnings and profits in tax years beginning after January 1, 1995 are redetermined by taking into account a negative adjustment in the tax year S's loss arose and in 1990 for P's distribution, and any subsequent absorption of the loss has no effect on earnings and profits. Any such determination or redetermination does not, however, affect any prior period. Thus, the shareholder's treatment in 1990 of the distribution as a dividend (and the effect of the distribution on stock basis) is not redetermined under this section. Paragraphs (a)(2) and (e)(2)(i)(A) of this section apply with respect to determinations of the earnings and profits of a member in consolidated return years beginning on or after September 17, 2008. However, taxpayers may apply paragraph (e)(2)(i)(A) of this section with respect to determinations of the earnings and profits of a member in consolidated return years beginning prior to September 17, 2008.

(2) *Dispositions of stock before effective date*—(i) *In general*. If P disposes of stock of S in a consolidated return year beginning before January 1, 1995, the amount of P's earnings and profits with respect to S are not redetermined under paragraph (j)(1) of this section. See §1.1502–19 as contained in the 26 CFR part 1 edition revised as of April 1, 1994 for the definition of disposition, and paragraph (j)(5) of this section for the rules applicable to such dispositions.

(ii) *Lower-tier members*. Although P disposes of S's stock in a tax year beginning before January 1, 1995, S's determinations or adjustments with respect to lower-tier members with which it continues to file a consolidated return are redetermined in accordance with the rules of this section (even if S's earnings and profits were previously taken into account by P). For example, assume that P owns all of S's stock, S owns all of T's stock, and T owns all of U's stock. If S sells 80%

of T's stock in a tax year beginning before January 1, 1995 (the effective date), the amount of S's earnings and profits from the sale, and the adjustments to stock basis for earnings and profits purposes that are reflected in that amount, are not redetermined if P sells S's stock after the effective date. If S sells the remaining 20% of T's stock after the effective date, S's stock basis adjustments with respect to that T stock are also not redetermined because T became a nonmember before the effective date. However, if T and U continue to file a consolidated return with each other, paragraph (e)(1) of this section did not apply, and T sells U's stock after the effective date, T's earnings and profits with respect to U are redetermined (even though some of the earnings and profits may have been taken into account by S in its prior sale of T's stock before the effective date).

(iii) *Deferred amounts.* For purposes of this paragraph (j)(2), a disposition does not include a transaction to which §1.1502–13, §1.1502–13T, §1.1502–14, or §1.1502–14T applies. Instead, the transaction is deemed to occur as the earnings and profits (if any) are taken into account.

(3) *Deconsolidations and group structure changes*—(i) *In general.* Paragraphs (e) and (f) of this section apply with respect to deconsolidations and group structure changes occurring in consolidated return years beginning on or after January 1, 1995.

(ii) *Prior period group structure changes.* If there was a group structure change in a consolidated return year beginning before January 1, 1995, and earnings and profits were not determined under §1.1502–33T(a) as contained in the 26 CFR part 1 edition revised as of April 1, 1994, a distribution in a tax year ending after September 7, 1988, of earnings and profits that are not reflected in the earnings and profits of the distributee member, but would have been so reflected if §1.1502–33T(a) as contained in the 26 CFR part 1 edition revised as of April 1, 1994 had applied, the negative adjustment under paragraph (b) of this section for distributions does not apply (and there is therefore no offset to the increase in the earnings and profits of the distributee).

(4) *Deemed dividend elections.* If there is a deemed distribution and recontribution pursuant to §1.1502–32(f)(2) as contained in the 26 CFR part 1 edition revised as of April 1, 1994 in a consolidated return year beginning before January 1, 1995, the deemed distribution and recontribution under the election are treated as an actual distribution by S and recontribution by P as provided under the election.

(5) *Prior law.* For prior determinations, see prior regulations under section 1502 as in effect with respect to the determination. See, e.g., §§1.1502–33 and 1.1502–33T as contained in the 26 CFR part 1 edition revised as of April 1, 1994.

(k) *Effective/applicability date.* Paragraph (d)(5)(i)(D) of this section applies to any original consolidated Federal income tax return due (without extensions) after June 14, 2007. For original consolidated Federal income tax returns due (without extensions) after May 30, 2006, and on or before June 14, 2007, see §1.1502–33T as contained in 26 CFR part 1 in effect on April 1, 2007. For original consolidated Federal income tax returns due (without extensions) on or before May 30, 2006, see §1.1502–33 as contained in 26 CFR part 1 in effect on April 1, 2006.

[T.D. 8560, 59 FR 41695, Aug. 15, 1994, as amended by T.D. 8597, 60 FR 36710, July 18, 1995; T.D. 9264, 71 FR 30603, May 30, 2006; T.D. 9329, 72 FR 32805, June 14, 2007; T.D. 9424, 73 FR 53951, Sept. 17, 2008; 73 FR 62204, Oct. 20, 2008]

§1.1502–34 Special aggregate stock ownership rules.

For purposes of §§1.1502–1 through 1.1502–80, in determining the stock ownership of a member of a group in another corporation (the ''issuing corporation'') for purposes of determining the application of section 165(g)(3)(A), 332(b)(1), 333(b), 351(a), 732(f), or 904(f), in a consolidated return year, there shall be included stock owned by all other members of the group in the issuing corporation. Thus, assume that members A, B, and C each own 33⅓ percent of the stock issued by D. In such case, A, B, and C shall each be treated

as meeting the 80-percent stock ownership requirement for purposes of section 332, and no member can elect to have section 333 apply. Furthermore, the special rule for minority shareholders in section 337(d) cannot apply with respect to amounts received by A, B, or C in liquidation of D.

[T.D. 6894, 31 FR 11794, Sept. 8, 1966, as amended by T.D. 8949, 66 FR 32902, June 19, 2001]

§ 1.1502–35 Transfers of subsidiary stock and deconsolidations of subsidiaries.

(a) *In general*—(1) *Purpose*. The purpose of this section is to prevent a group from obtaining more than one tax benefit from a single economic loss. The provisions of this section shall be construed in a manner that is consistent with that purpose and in a manner that reasonably carries out that purpose.

(2) *Dates of applicability*. This section applies if—

(i) On or after March 7, 2002, a member recognizes a loss on the disposition of a share of stock of a subsidiary (or, on or after April 10, 2007, a share of stock of a former subsidiary) or a carryover basis asset (subject to paragraph (c)(6) of this section),

(ii) The member's loss on the share of subsidiary stock or the carryover basis asset is allowed on or before the date that is ten years after the disposition of the share or carryover basis asset, and

(iii) If the disposition is of a share of subsidiary stock, it is not a transfer to which § 1.1502–36 applies.

(b) *Redetermination of basis on certain nondeconsolidating transfers of subsidiary stock and on certain deconsolidations of subsidiaries*—(1) *Redetermination of basis on certain nondeconsolidating transfers of subsidiary stock*. Except as provided in paragraph (b)(3)(i) of this section, if, immediately after a transfer of stock of a subsidiary that has a basis that exceeds its value, the subsidiary remains a member of the group, then the basis in each share of subsidiary stock owned by each member of the group shall be redetermined in accordance with the provisions of this paragraph (b)(1) immediately before such transfer. All of the members' bases in the shares of subsidiary stock immediately before such transfer shall be aggregated. Such aggregated basis shall be allocated first to the shares of the subsidiary's preferred stock that are owned by the members of the group immediately before such transfer, in proportion to, but not in excess of, the value of those shares at such time. After allocation of the aggregated basis to all shares of the preferred stock of the subsidiary pursuant to the preceding sentence, any remaining basis shall be allocated among all common shares of subsidiary stock held by members of the group immediately before the transfer, in proportion to the value of such shares at such time.

(2) *Redetermination of basis on certain deconsolidations of subsidiaries*—(i) *Allocation of reallocable basis amount*. Except as provided in paragraph (b)(3)(ii) of this section, if, immediately before a deconsolidation of a subsidiary, any share of stock of such subsidiary owned by a member of the group has a basis that exceeds its value, then the basis in each share of the subsidiary's stock owned by each member of the group shall be redetermined in accordance with the provisions of this paragraph (b)(2) immediately before such deconsolidation. The basis in each share of the subsidiary's stock held by members of the group immediately before the deconsolidation that has a basis in excess of value at such time shall be reduced, but not below such share's value, in a manner that, to the greatest extent possible, causes the ratio of the basis to the value of each such share to be the same; provided, however, that the aggregate amount of such reduction shall not exceed the reallocable basis amount (as computed pursuant to paragraph (b)(2)(ii) of this section). Then, to the extent of the reallocable basis amount, the basis of each share of the preferred stock of the subsidiary that are held by members of the group immediately before the deconsolidation shall be increased, but not above such share's value, in a manner that, to the greatest extent possible, causes the ratio of the basis to the value of each such share to be the

same. Then, to the extent that the reallocable basis amount does not increase the basis of shares of preferred stock of the subsidiary pursuant to the third sentence of this paragraph (b)(2)(i), such amount shall increase the basis of all common shares of the subsidiary's stock held by members of the group immediately before the deconsolidation in a manner that, to the greatest extent possible, causes the ratio of the basis to the value of each such share to be the same.

(ii) *Calculation of reallocable basis amount.* The reallocable basis amount shall equal the lesser of—

(A) The aggregate of all amounts by which, immediately before the deconsolidation, the basis exceeds the value of a share of subsidiary stock owned by any member of the group at such time; and

(B) The total of the subsidiary's (and any predecessor's) items of deduction and loss, and the subsidiary's (and any predecessor's) allocable share of items of deduction and loss of all lower-tier subsidiaries, that were taken into account in computing the adjustment under §1.1502–32 to the bases of shares of stock of the subsidiary (and any predecessor) held by members of the group immediately before the deconsolidation, other than shares that have bases in excess of value immediately before the deconsolidation.

(3) *Exceptions to application of redetermination rules.* (i) Paragraph (b)(1) of this section shall not apply to a transfer of subsidiary stock if—

(A) During the taxable year of such transfer, in one or more fully taxable transactions, the members of the group dispose of all of the shares of the subsidiary stock that they own immediately before the transfer, other than the shares the transfer of which would otherwise trigger the application of paragraph (b)(1) of this section, to a person or persons that are not members of the group;

(B) During the taxable year of such transfer, the members of the group are allowed a worthless stock loss under section 165(g) (taking into account the provisions of §1.1502–80(c)) with respect to all of the shares of subsidiary stock that they own immediately before the transfer, other than the shares the transfer of which would otherwise trigger the application of paragraph (b)(1) of this section; or

(C) Such transfer is to a member of the group and section 332 (provided the stock is transferred to an 80-percent distributee), section 351, section 354, or section 361 applies to such transfer.

(ii) Paragraph (b)(2) of this section shall not apply to a deconsolidation of a subsidiary if—

(A) During the taxable year of such deconsolidation, in one or more fully taxable transactions, the members of the group dispose of all of the shares of the subsidiary stock that they own immediately before the deconsolidation to a person or persons that are not members of the group;

(B) Such deconsolidation results from a fully taxable disposition, to a person or persons that are not members of the group, of some of the shares of the subsidiary, and, during the taxable year of such deconsolidation, the members of the group are allowed a worthless stock loss under section 165(g) with respect to all of the shares of the subsidiary stock that they own immediately after the deconsolidation;

(C) The members of the group are allowed a worthless stock loss under section 165(g) with respect to all of the shares of the subsidiary stock that they own immediately before the deconsolidation;

(D) The deconsolidation of the subsidiary results from the deconsolidation of a higher-tier subsidiary and, immediately after the deconsolidation of the subsidiary, none of the stock of the subsidiary is owned by a group member; or

(E) The deconsolidation of the subsidiary results from a termination of the group.

(4) *Special rule for lower-tier subsidiaries.* If, immediately after a transfer of subsidiary stock or a deconsolidation of a subsidiary, a lower-tier subsidiary some of the stock of which is owned by the subsidiary is a member of the group, then, for purposes of applying this paragraph (b), the subsidiary shall be treated as having transferred its stock of the lower-tier subsidiary. This principle shall apply to stock of subsidiaries that are owned by such lower-tier subsidiary.

(5) *Stock basis adjustments for higher-tier stock.* The basis adjustments required under this paragraph (b) result in basis adjustments to higher-tier member stock. The adjustments are applied in the order of the tiers, from the lowest to highest. For example, if a common parent owns stock of a subsidiary that owns stock of a lower-tier subsidiary and the subsidiary recognizes a loss on the disposition of a portion of its shares of the lower-tier subsidiary stock, the common parent must adjust its basis in its subsidiary stock under the principles of § 1.1502–32 to reflect the adjustments that the subsidiary must make to its basis in its stock of the lower-tier subsidiary.

(6) *Ordering rules.* (i) The rules of this paragraph (b) apply after the rules of § 1.1502–32 are applied.

(ii) The rules of this paragraph (b) apply before the rules of § 1.337(d)–2 and paragraphs (c) and (f) of this section are applied.

(iii) This paragraph (b) (and any resulting basis adjustments to higher-tier member stock made pursuant to paragraph (b)(5) of this section) applies to redetermine the basis of stock of a lower-tier subsidiary before this paragraph (b) applies to a higher-tier member of such lower-tier subsidiary.

(c) *Loss suspension*—(1) *General rule.* Any loss recognized by a member of a consolidated group with respect to the disposition of a share of subsidiary stock shall be suspended to the extent of the duplicated loss with respect to such share of stock if, immediately after the disposition, the subsidiary is a member of the consolidated group of which it was a member immediately prior to the disposition (or any successor group).

(2) *Special rule for lower-tier subsidiaries.* This paragraph (c)(2) applies if neither paragraph (c)(1) nor (f) of this section applies to a member's disposition of a share of stock of a subsidiary (the departing member), a loss is recognized on the disposition of such share, and the departing member owns stock of one or more other subsidiaries (a remaining member) that is a member of such group immediately after the disposition. In that case, such loss shall be suspended to the extent the duplicated loss with respect to the departing member stock disposed of is attributable to the remaining member or members.

(3) *Treatment of suspended loss*—(i) *General rule.* For purposes of the rules of § 1.1502–32, any loss suspended pursuant to paragraph (c)(1) or (c)(2) of this section is treated as a noncapital, nondeductible expense of the member that disposes of subsidiary stock, incurred during the taxable year that includes the date of the disposition of stock to which paragraph (c)(1) or (c)(2) of this section applies. See § 1.1502–32(b)(3)(iii)(C). Consequently, the basis of a higher-tier member's stock of the member that disposes of subsidiary stock is reduced by the suspended loss in the year it is suspended.

(ii) *Location of suspended loss following deconsolidation of selling member.* If a member recognizes a loss that is suspended under this paragraph (c) but that member ceases to be a member of the group before the loss is allowable, the common parent is treated as succeeding to the loss in a transaction to which section 381(a) applies.

(4) *Reduction of suspended loss*—(i) *General rule.* The amount of any loss suspended pursuant to paragraph (c)(1) or (c)(2) of § 1.1502–35 shall be reduced, but not below zero, by the subsidiary's (and any successor's) items of deduction and loss, and the subsidiary's (and any successor's) allocable share of items of deduction and loss of all lower-tier subsidiaries, that are allocable to the period beginning on the date of the disposition that gave rise to the suspended loss and ending on the day before the first date on which the subsidiary (and any successor) is not a member of the group of which it was a member immediately prior to the disposition (or any successor group), and that are taken into account in determining consolidated taxable income (or loss) of such group for any taxable year that includes any date on or after the date of the disposition and before the first date on which the subsidiary (and any successor) is not a member of such group; provided, however, that such reduction shall not exceed the excess of the amount of such items over the amount of such items that are taken into account in determining the basis adjustments made under § 1.1502–32 to

stock of the subsidiary (or any successor) owned by members of the group. The preceding sentence shall not apply to items of deduction and loss to the extent that the group can establish that all or a portion of such items was not reflected in the computation of the duplicated loss with respect to the subsidiary on the date of the disposition of stock that gave rise to the suspended loss.

(ii) *Operating rules*—(A) *Year in which deduction or loss is taken into account.* For purposes of paragraph (c)(4)(i) of this section, a subsidiary's (or any successor's) deductions and losses are treated as taken into account when and to the extent they are absorbed by the subsidiary (or any successor) or any other member. To the extent that the subsidiary's (or any successor's) deduction or loss is absorbed in the year it arises or is carried forward and absorbed in a subsequent year (e.g., under section 172, 465, or 1212), the deduction is treated as taken into account in the year in which it is absorbed. To the extent that a subsidiary's (or any successor's) deduction or loss is carried back and absorbed in a prior year (whether consolidated or separate), the deduction or loss is treated as taken into account in the year in which it arises and not in the year in which it is absorbed.

(B) *Determination of items that are allocable to the post-disposition, pre-deconsolidation period.* For purposes of paragraph (c)(4)(i) of this section, the determination of whether a subsidiary's (or any successor's) items of deduction and loss and allocable share of items of deduction and loss of all lower-tier subsidiaries are allocable to the period beginning on the date of the disposition of subsidiary stock that gave rise to the suspended loss and ending on the day before the first date on which the subsidiary (or any successor) is not a member of the consolidated group of which it was a member immediately prior to the disposition (or any successor group) is determined pursuant to the rules of §1.1502–76(b)(2), without regard to §1.1502–76(b)(2)(ii)(D), as if the subsidiary ceased to be a member of the group at the end of the day before the disposition and filed separate returns for the period beginning on the date of the disposition and ending on the day before the first date on which it is not a member of such group.

(5) *Allowable loss*—(i) *General rule.* To the extent not reduced under paragraph (c)(4) of this section, any loss suspended pursuant to paragraph (c)(1) or (c)(2) of this section shall be allowed, to the extent otherwise allowable under applicable provisions of the Internal Revenue Code and regulations, on a return filed by the group of which the subsidiary was a member on the date of the disposition of subsidiary stock that gave rise to the suspended loss (or any successor group) for the taxable year that includes the earlier of—

(A) The day before the first date on which the subsidiary (and any successor) is not a member of such group or the date the group is allowed a worthless stock loss under section 165 (taking into account the provisions of §1.1502–80(c)) with respect to all of the subsidiary stock owned by members and;

(B) The date that is ten years after the date of the disposition of subsidiary stock that gave rise to the suspended loss.

(ii) *No tiering up of certain adjustments.* No adjustments shall be made to a member's basis of stock of a subsidiary (or any successor) for a suspended loss that is taken into account under paragraph (c)(5)(i) of this section. See §1.1502–32(a)(2).

(iii) *Statement of allowed loss.* Paragraph (c)(5)(i) of this section applies only if the separate statement required under this paragraph (c)(5)(iii) is filed with, or as part of, the taxpayer's return for the year in which the loss is allowable. The statement must be entitled ''ALLOWED LOSS UNDER §1.1502–35(c)(5)'' and must contain the name and employer identification number of the subsidiary the stock of which gave rise to the loss.

(6) *Special rule for dispositions of certain carryover basis assets.* If—

(i) A member of a group recognizes a loss on the disposition of an asset other than stock of a subsidiary;

(ii) Such member's basis in the asset disposed of was determined, directly or

indirectly, in whole or in part, by reference to the basis of stock of a subsidiary and, at the time of the determination of the member's basis in the asset disposed of, there was a duplicated loss with respect to such stock of the subsidiary; and

(iii) Immediately after the disposition, the subsidiary is a member of such group, then such loss shall be suspended pursuant to the principles of paragraphs (c)(1) and (c)(2) of this section to the extent of the duplicated loss with respect to such stock at the time of the determination of basis of the asset disposed of. Principles similar to those set forth in paragraphs (c)(3), (c)(4), and (c)(5) of this section shall apply to a loss suspended pursuant to this paragraph (c)(6).

(7) *Coordination with loss deferral, loss disallowance, and other rules*—(i) *In general.* Loss recognized on the disposition of subsidiary stock or another asset is subject to redetermination, deferral, or disallowance under other applicable provisions of the Internal Revenue Code and regulations thereunder, including sections 267(f) and 482. Paragraphs (c)(1), (c)(2), and (c)(6) of this section do not apply to a loss that is disallowed under any other provision. If loss is deferred under any other provision, paragraphs (c)(1), (c)(2), and (c)(6) of this section apply when the loss would otherwise be taken into account under such other provision. However, if an overriding event described in paragraph (c)(7)(ii) of this section occurs before the deferred loss is taken into account, paragraphs (c)(1), (c)(2), and (c)(6) of this section apply to the loss immediately before the event occurs, even though the loss may not be taken into account until a later time.

(ii) *Overriding events.* For purposes of paragraph (c)(7)(i) of this section, the following are overriding events—

(A) The stock ceases to be owned by a member of the consolidated group;

(B) The stock is canceled or redeemed (regardless of whether it is retired or held as treasury stock); or

(C) The stock is treated as disposed of under §1.1502–19(c)(1)(ii)(B) or (c)(1)(iii).

(8) *No elimination of economic loss.* This paragraph (c) shall not be applied in a manner that permanently disallows a deduction for an economic loss, provided that such deduction is otherwise allowable. If the application of any provision of this paragraph (c) results in such a disallowance, proper adjustment may be made to prevent such a disallowance. Whether a provision of this paragraph (c) has resulted in such a disallowance is determined on the date on which the subsidiary (or any successor) the disposition of the stock of which gave rise to a suspended stock loss is not a member of the group or the date the group is allowed a worthless stock loss under section 165(g) (taking into account the provisions of §1.1502–80(c)) with respect to all of such subsidiary stock owned by members. Proper adjustment in such cases shall be made by restoring the suspended stock loss immediately before the subsidiary ceases to be a member of the group or the group is allowed a worthless stock loss under section 165(g) (taking into account the provisions of §1.1502–80(c)) with respect to all of such subsidiary stock owned by members, to the extent that its reduction pursuant to paragraph (c)(4) of this section had the result of permanently disallowing a deduction for an economic loss.

(9) *Ordering rule.* The rules of this paragraph (c) apply after the rules of paragraph (b) of this section and §1.337(d)–2 are applied.

(d) *Definitions*—(1) *Disposition* means any event in which gain or loss is recognized, in whole or in part.

(2) *Deconsolidation* means any event that causes a subsidiary to no longer be a member of the consolidated group.

(3) *Value* means fair market value.

(4) *Duplicated loss*—(i) *In general.* Duplicated loss is determined immediately after a disposition and equals the excess, if any, of—

(A) The sum of—

(*1*) The aggregate adjusted basis of the subsidiary's assets other than any stock that subsidiary owns in another subsidiary;

(*2*) Any losses attributable to the subsidiary and carried to the subsidiary's first taxable year following the disposition; and

(*3*) Any deductions of the subsidiary that have been recognized but are deferred under a provision of the Internal

Revenue Code (such as deductions deferred under section 469); over

(B) The sum of—

(*1*) The value of the subsidiary's stock; and

(*2*) Any liabilities of the subsidiary that have been taken into account for tax purposes.

(ii) *Special rules.* (A) The amounts determined under paragraph (d)(4)(i) (other than amounts described in paragraph (d)(4)(i)(B)(1)) of this section with respect to a subsidiary include its allocable share of corresponding amounts with respect to all lower-tier subsidiaries. If 80 percent or more in value of the stock of a subsidiary is acquired by purchase in a single transaction (or in a series of related transactions during any 12-month period), the value of the subsidiary's stock may not exceed the purchase price of the stock divided by the percentage of the stock (by value) so purchased. For this purpose, stock is acquired by purchase if the transferee is not related to the transferor within the meaning of sections 267(b) and 707(b)(1), using the language ''10 percent'' instead of ''50 percent'' each place that it appears, and the transferee's basis in the stock is determined wholly by reference to the consideration paid for such stock.

(B) The amounts determined under paragraph (d)(4)(i) of this section are not applied more than once to suspend a loss under this section.

(5) *Predecessor and successor.* A predecessor is a transferor of assets to a transferee (the successor) in a transaction—

(i) To which section 381(a) applies;

(ii) In which substantially all of the assets of the transferor are transferred to members in a complete liquidation;

(iii) In which the successor's basis in assets is determined (directly or indirectly, in whole or in part) by reference to the transferor's basis in such assets, but the transferee is a successor only with respect to the assets the basis of which is so determined; or

(iv) Which is an intercompany transaction, but only with respect to assets that are being accounted for by the transferor in a prior intercompany transaction.

(6) *Successor group.* A surviving group is treated as a successor group of a consolidated group (the terminating group) that ceases to exist as a result of—

(i) The acquisition by a member of another consolidated group of either the assets of the common parent of the terminating group in a reorganization described in section 381(a)(2), or the stock of the common parent of the terminating group; or

(ii) The application of the principles of § 1.1502–75(d)(2) or (3).

(7) *Preferred stock, common stock.* Preferred stock and common stock shall have the meanings set forth in § 1.1502–32(d)(2) and (3), respectively.

(8) *Higher-tier.* A subsidiary is higher-tier with respect to a member if or to the extent investment adjustments under § 1.1502–32 with respect to the stock of the latter member would affect investment adjustments with respect to the stock of the former member.

(9) *Lower-tier.* A subsidiary is lower-tier with respect to a member if or to the extent investment basis adjustments under § 1.1502–32 with respect to the stock of the former member would affect investment adjustments with respect to the stock of the latter member.

(e) *Examples.* For purposes of the examples in this section, unless otherwise stated, all groups file consolidated returns on a calendar-year basis, the facts set forth the only corporate activity, all transactions are between unrelated persons, and tax liabilities are disregarded. In addition, all transactions described in section 362(a) are completed before October 22, 2004, and therefore are not subject to section 362(e)(2). The principles of paragraphs (a) through (d) of this section are illustrated by the following examples:

Example 1. Nondeconsolidating sale of preferred stock of lower-tier subsidiary. (i) *Facts.* P owns 100 percent of the common stock of each of S1 and S2. S1 and S2 each have only one class of stock outstanding. P's basis in the stock of S1 is $100 and the value of such stock is $130. P's basis in the stock of S2 is $120 and the value of such stock is $90. P, S1, and S2 are all members of the P group. S1 and S2 form S3. In Year 1, in transfers to which section 351 applies, S1 contributes $100 to S3 in exchange for all of the common stock of S3 and S2 contributes an asset with

a basis of $50 and a value of $20 to S3 in exchange for all of the preferred stock of S3. S3 becomes a member of the P group. In Year 3, in a transaction that is not part of the plan that includes the contributions to S3, S2 sells the preferred stock of S3 for $20. Immediately after the sale, S3 is a member of the P group.

(ii) *Application of basis redetermination rule.* Because S2's basis in the preferred stock of S3 exceeds its value immediately prior to the sale and S3 is a member of the P group immediately after the sale, all of the P group members' bases in the stock of S3 is redetermined pursuant to paragraph (b)(1) of this section. Of the group members' total basis of $150 in the S3 stock, $20 is allocated to the preferred stock, the fair market value of the preferred stock on the date of the sale, and $130 is allocated to the common stock. S2's sale of the preferred stock results in the recognition of $0 of gain/loss. Pursuant to paragraph (b)(5) of this section, the redetermination of S1's and S2's bases in the stock of S3 results in adjustments to P's basis in the stock of S1 and S2. In particular, P's basis in the stock of S1 is increased by $30 to $130 and its basis in the stock of S2 is decreased by $30 to $90.

Example 2. Deconsolidating sale of common stock. (i) *Facts.* In Year 1, in a transfer to which section 351 applies, P contributes Asset A with a basis of $900 and a value of $200 to S in exchange for one share of S common stock (CS1). In Years 2 and 3, in successive but unrelated transfers to which section 351 applies, P transfers $200 to S in exchange for one share of S common stock (CS2), Asset B with a basis of $300 and a value of $200 in exchange for one share of S common stock (CS3), and Asset C with a basis of $1000 and a value of $200 in exchange for one share of S common stock (CS4). In Year 4, S sells Asset A for $200, recognizing $700 of loss that is used to offset income of P recognized during Year 4. As a result of the sale of Asset A, the basis of each of P's four shares of S common stock is reduced by $175. Therefore, the basis of CS1 is $725. The basis of CS2 is $25. The basis of CS3 is $125, and the basis of CS4 is $825. In Year 5 in a transaction that is not part of a plan that includes the Year 1 contribution, P sells CS4 for $200. Immediately after the sale of CS4, S is not a member of the P group.

(ii) *Application of basis redetermination rule.* Because P's basis in each of CS1 and CS4 exceeds its value immediately prior to the deconsolidation of S, P's basis in its shares of S common stock is redetermined pursuant to paragraph (b)(2) of this section. Pursuant to paragraph (b)(2)(ii) of this section, the reallocable basis amount is $350 (the lesser of $1150, the gross loss inherent in the stock of S owned by P immediately before the sale, and $350, the aggregate amount of S's items of deduction and loss that were previously taken into account in the computation of the adjustment to the basis of the stock of S that P did not hold at a loss immediately before the deconsolidation). Pursuant to paragraph (b)(2)(i) of this section, first, P's basis in CS1 is reduced from $725 to $600 and P's basis in CS4 is reduced from $825 to $600. Then, the reallocable basis amount increases P's basis in CS2 from $25 to $250 and P's basis in CS3 from $125 to $250. P recognizes $400 of loss on the sale of CS4. The loss suspension rule does not apply because S is no longer a member of the P group. Thus, the loss is allowable at that time.

Example 3. Nondeconsolidating sale of common stock. (i) *Facts.* In Year 1, P forms S with a contribution of $80 in exchange for 80 shares of the common stock of S, which at that time represents all of the outstanding stock of S. S becomes a member of the P group. In Year 2, P contributes Asset A with a basis of $50 and a value of $20 in exchange for 20 shares of the common stock of S in a transfer to which section 351 applies. In Year 4, in a transaction that is not part of the plan that includes the Year 2 contribution, P sells the 20 shares of the common stock of S that it acquired in Year 2 for $20. Immediately after the Year 4 stock sale, S is a member of the P group. At the time of the Year 4 stock sale, S has $80 and Asset A. In Year 5, S sells Asset A, the basis and value of which have not changed since its contribution to S. On the sale of Asset A for $20, S recognizes a $30 loss. The P group cannot establish that all or a portion of the $30 loss was not reflected in the calculation of the duplicated loss of S on the date of the Year 4 stock sale. The $30 loss is used on the P group return to offset income of P. In Year 6, P sells its remaining S common stock for $80.

(ii) *Application of basis redetermination and loss suspension rules.* Because P's basis in the common stock sold exceeds its value immediately prior to the sale and S is a member of the P group immediately after the sale, P's basis in all of the stock of S is redetermined pursuant to paragraph (b)(1) of this section. Of P's total basis of $130 in the S common stock, a proportionate amount is allocated to each of the 100 shares of S common stock. Accordingly, $26 is allocated to the common stock of S that is sold and $104 is allocated to the common stock of S that is retained. On P's sale of the 20 shares of the common stock of S for $20, P recognizes a loss of $6. Because the sale of the 20 shares of common stock of S does not result in the deconsolidation of S, under paragraph (c)(1) of this section, that loss is suspended to the extent of the duplicated loss with respect to the shares sold. The duplicated loss with respect to the shares sold is $6. Therefore, the entire $6 loss is suspended.

(iii) *Effect of subsequent asset sale on stock basis.* Of the $30 loss recognized on the sale of

Asset A, $24 is taken into account in determining the basis adjustments made under § 1.1502–32 to the stock of S owned by P. Accordingly, P's basis in its S stock is reduced by $24 from $104 to $80.

(iv) *Effect of subsequent asset sale on suspended loss.* Because P cannot establish that all or a portion of the loss recognized on the sale of Asset A was not reflected in the calculation of the duplicated loss of S on the date of the Year 4 stock sale and such loss is allocable to the period beginning on the date of the Year 4 disposition of the S stock and ending on the day before the first date on which S is not a member of the P group and is taken into account in determining consolidated taxable income (or loss) of the P group for a taxable year that includes a date on or after the date of the Year 4 disposition and before the first date on which S is not a member of the P group, such asset loss reduces the suspended loss pursuant to paragraph (c)(4) of this section. The amount of such reduction, however, cannot exceed $6, the excess of the amount of such loss, $30, over the amount of such loss that is taken into account in determining the basis adjustment made to the stock of S owned by P, $24. Therefore, the suspended loss is reduced to zero.

(v) *Effect of subsequent stock sale.* P recognizes $0 gain/loss on the Year 6 sale of its remaining S common stock. No amount of suspended loss remains to be allowed under paragraph (c)(5) of this section.

Example 4. Nondeconsolidating sale of common stock of lower-tier subsidiary. (i) *Facts.* In Year 1, P forms S1 with a contribution of $200 in exchange for all of the common stock of S1, which represents all of the outstanding stock of S1. In the same year, S1 forms S2 with a contribution of $80 in exchange for 80 shares of the common stock of S2, which at that time represents all of the outstanding stock of S2. S1 and S2 become members of the P group. In the same year, S2 purchases Asset A for $80. In Year 2, S1 contributes Asset B with a basis of $50 and a value of $20 in exchange for 20 shares of the common stock of S2 in a transfer to which section 351 applies. In Year 4, S1 sells the 20 shares of the common stock of S2 that it acquired in Year 2 for $20. Immediately after the Year 4 stock sale, S2 is a member of the P group. At the time of the Year 4 stock sale, the bases and values of Asset A and Asset B are unchanged. In Year 5, S2 sells Asset B for $45, recognizing a $5 loss. The P group cannot establish that all or a portion of the $5 loss was not reflected in the calculation of the duplicated loss of S2 on the date of the Year 4 stock sale. The $5 loss is used on the P group return to offset income of P. In Year 6, S1 sells its remaining S2 common stock for $100.

(ii) *Application of basis redetermination and loss suspension rules.* Because S1's basis in the S2 common stock sold exceeds its value immediately prior to the sale and S2 is a member of the P group immediately after the sale, S1's basis in all of the stock of S2 is redetermined pursuant to paragraph (b)(1) of this section. Of S1's total basis of $130 in the S2 common stock, a proportionate amount is allocated to each of the 100 shares of S2 common stock. Accordingly, a total of $26 is allocated to the common stock of S2 that is sold and $104 is allocated to the common stock of S2 that is retained. On S1's sale of the 20 shares of the common stock of S2 for $20, S1 recognizes a loss of $6. Because the sale of the 20 shares of common stock of S2 does not result in the deconsolidation of S2, under paragraph (c)(1) of this section, that loss is suspended to the extent of the duplicated loss with respect to the shares sold. The duplicated loss with respect to the shares sold is $6. Therefore, the entire $6 loss is suspended. Pursuant to paragraph (c)(3) of this section and § 1.1502–32(b)(3)(iii)(C), the suspended loss is treated as a noncapital, nondeductible expense incurred by S1 during the tax year that includes the date of the disposition of stock to which paragraph (c)(1) of this section applies. Accordingly, P's basis in its S1 stock is reduced from $200 to $194.

(iii) *Effect of subsequent asset sale on stock basis.* Of the $5 loss recognized on the sale of Asset B, $4 is taken into account in determining the basis adjustments made under § 1.1502–32 to the stock of S2 owned by S1. Accordingly, S1's basis in its S2 stock is reduced by $4 from $104 to $100 and P's basis in its S1 stock is reduced by $4 from $194 to $190.

(iv) *Effect of subsequent asset sale on suspended loss.* Because P cannot establish that all or a portion of the loss recognized on the sale of Asset B was not reflected in the calculation of the duplicated loss of S2 on the date of the Year 4 stock sale and such loss is allocable to the period beginning on the date of the Year 4 disposition of the S2 stock and ending on the day before the first date on which S2 is not a member of the P group and is taken into account in determining consolidated taxable income (or loss) of the P group for a taxable year that includes a date on or after the date of the Year 4 disposition and before the first date on which S2 is not a member of the P group, such asset loss reduces the suspended loss pursuant to paragraph (c)(4) of this section. The amount of such reduction, however, cannot exceed $1, the excess of the amount of such loss, $5, over the amount of such loss that is taken into account in determining the basis adjustment made to the stock of S2 owned by members of the P group, $4. Therefore, the suspended loss is reduced to $5.

(v) *Effect of subsequent stock sale.* In year 6, when S1 sells its remaining S2 stock for $100, it recognizes $0 gain/loss. Pursuant to paragraph (c)(5) of this section, the remaining $5 of the suspended loss is allowed on the P

group's return for Year 6 when S1 sells its remaining S2 stock.

Example 5. Deconsolidating sale of subsidiary owning stock of another subsidiary that remains in group. (i) *Facts.* In Year 1, P forms S1 with a contribution of Asset A with a basis of $50 and a value of $20 in exchange for 100 shares of common stock of S1 in a transfer to which section 351 applies. Also in Year 1, P and S1 form S2. P contributes $80 to S2 in exchange for 80 shares of common stock of S2. S1 contributes Asset A to S2 in exchange for 20 shares of common stock of S2 in a transfer to which section 351 applies. In Year 3, in a transaction that is not part of a plan that includes the Year 1 contributions, P sells its 100 shares of S1 common stock for $20. Immediately after the Year 3 stock sale, S2 is a member of the P group. At the time of the Year 3 stock sale, S1 owns 20 shares of common stock of S2, and S2 has $80 and Asset A. In Year 4, S2 sells Asset A, the basis and value of which have not changed since its contribution to S2. On the sale of Asset A for $20, S2 recognizes a $30 loss. That $30 loss is used on the P group return to offset income of P. In Year 5, P sells its S2 common stock for $80.

(ii) *Application of basis redetermination and loss suspension rules.* Pursuant to paragraph (b)(4) of this section, because immediately before P's transfer of S1 stock S1 owns stock of S2 (another subsidiary of the same group) that has a basis that exceeds its value, paragraph (b) of this section applies as if S1 had transferred its stock of S2. Because S2 is a member of the group immediately after the transfer of the S1 stock, the group member's basis in the S2 stock is redetermined pursuant to paragraph (b)(1) of this section immediately prior to the sale of the S1 stock. Of the group members' total basis of $130 in the S2 stock, $26 is allocated to S1's 20 shares of S2 common stock and $104 is allocated to P's 80 shares of S2 common stock. Pursuant to paragraph (b)(5) of this section, the redetermination of S1's basis in the stock of S2 results in an adjustment to P's basis in the stock of S1. In particular, P's basis in the stock of S1 is decreased by $24 to $26. On P's sale of its 100 shares of S1 common stock for $20, P recognizes a loss of $6. Because S1 is not a member of the P group immediately after P's sale of the S1 stock, paragraph (c)(1) of this section does not apply to suspend such loss. However, because P recognizes a loss with respect to the disposition of the S1 stock and S1 owns stock of S2 (which is a member of the P group immediately after the disposition), paragraph (c)(2) of this section does apply to suspend up to $6 of that loss, an amount equal to the amount by which the duplicated loss with respect to the stock of S1 sold is attributable to S2's adjusted basis in its assets, loss carryforwards, and deferred deductions.

(iii) *Effect of subsequent asset sale on stock basis.* Of the $30 loss recognized on the sale of Asset A, $24 is taken into account in determining the basis adjustments made under § 1.1502–32 to the stock of S2 owned by P. Accordingly, P's basis in its S2 stock is reduced by $24 from $104 to $80.

(iv) *Effect of subsequent asset sale on suspended loss.* Because P cannot establish that all or a portion of the loss recognized on the sale of Asset A was not reflected in the calculation of the duplicated loss of S2 on the date of the Year 3 stock sale and such loss is allocable to the period beginning on the date of the Year 3 deemed disposition of the S2 stock and ending on the day before the first date on which S2 is not a member of the P group and is taken into account in determining consolidated taxable income (or loss) of the P group for a taxable year that includes a date on or after the date of the Year 3 deemed disposition and before the first date on which S2 is not a member of the P group, such asset loss reduces the suspended loss pursuant to paragraph (c)(4) of this section. The amount of such reduction, however, cannot exceed $6, the excess of the amount of such loss, $30, over the amount of such loss that is taken into account in determining the basis adjustment made to the stock of S2 owned by P, $24. Therefore, the suspended loss is reduced to zero.

(v) *Effect of subsequent stock sale.* P recognizes $0 gain/loss on the Year 5 sale of its remaining S2 common stock. No amount of suspended loss remains to be allowed under paragraph (c)(5) of this section.

Example 6. Loss recognized on asset with basis determined by reference to stock basis of subsidiary. (i) *Facts.* In Year 1. P forms S with a contribution of $80 in exchange for 80 shares of common stock of S which at that time represents all of the outstanding stock of S. S becomes a member of the P group. In Year 2, P contributes Asset A with a basis of $50 and a value of $20 in exchange for 20 shares of common stock of S in a transfer to which section 351 applies. In Year 4, in a transaction that is not part of a plan that includes the Year 1 and Year 2 contributions, P contributes the 20 shares of S common stock it acquired in Year 2 to PS, a partnership, in exchange for a 20 percent capital and profits interest in a transaction described in section 721. Immediately after the contribution to PS, S is a member of the P group. In Year 5, P sells its interest in PS for $20.

(ii) *Application of basis redetermination rule upon nonrecognition transfer.* Because P's basis in the S common stock contributed to PS exceeds its value immediately prior to the transfer and S is a member of the P group immediately after the transfer, P's basis in all of the S stock is redetermined pursuant to paragraph (b)(1) of this section. Of P's total basis of $130 in the common

stock of S, a proportionate amount is allocated to each share of S common stock. Accordingly, $26 is allocated to the S common stock that is contributed to PS and, under section 722, P's basis in its interest in PS is $26.

(iii) *Application of loss suspension rule on disposition of asset with basis determined by reference to stock basis of subsidiary.* P recognizes a $6 loss on its disposition of its interest in PS. Because P's basis in its interest in PS was determined by reference to the basis of S stock and at the time of the determination of P's basis in its interest in PS such S stock had a duplicated loss of $6, and, immediately after the disposition, S is a member of the P group, such loss is suspended to the extent of such duplicated loss. Principles similar to those of paragraphs (c)(3), (c)(4), and (c)(5) of this section shall apply to such suspended loss.

(f) *Worthlessness not followed by separate return years.* Notwithstanding any other provision in the regulations under section 1502, if a member of a group (the claiming group) treats stock of a subsidiary as worthless under section 165 (taking into account the provisions of §1.1502–80(c)) and, on the day following the last day of the claiming group's taxable year in which the worthless stock deduction is claimed, the subsidiary (or its successor, determined without regard to paragraphs (d)(5)(iii) and (iv) of this section) is a member of a group that includes any corporation that, during that taxable year, was a member of the claiming group (other than a lower-tier subsidiary of the subsidiary) or is a successor (determined without regard to paragraphs (d)(5)(iii) and (iv) of this section) of such a member, then all losses treated as attributable to the subsidiary under the principles of §1.1502–21(b)(2)(iv) shall be treated as expired as of the beginning of the day following the last day of the claiming group's taxable year in which the worthless stock deduction is claimed. In addition, notwithstanding any other provision in the regulations under section 1502, if a member recognizes a loss with respect to subsidiary stock and on the following day the subsidiary is not a member of the group and does not have a separate return year, then all losses treated as attributable to the subsidiary under the principles of §1.1502–21(b)(2)(iv) shall be treated as expired as of the beginning of the day following the last day of the group's taxable year in which the stock loss is claimed. For purposes of this paragraph (f), the determination of the losses attributable to the subsidiary shall be made after computing the taxable income of the group for the taxable year in which the group treats the stock of the subsidiary as worthless or the subsidiary liquidates and after computing the taxable income for any taxable year to which such losses may be carried back. The loss treated as expired under this paragraph (f) shall not be treated as a noncapital, nondeductible expense under §1.1502–32(b)(2)(iii). This paragraph (f) applies to worthlessness determinations and liquidations that occur on or after March 10, 2006. For rules applicable to worthless determinations and liquidations before March 10, 2006, see §1.1502–35T(f)(1) and (2) as contained in 26 CFR part 1 in effect on January 1, 2006.

(g) *Anti-avoidance rules*—(1) *Transfer of share without a loss in avoidance.* If a share of subsidiary stock has a basis that does not exceed its value and the share is transferred with a view to avoiding application of the rules of paragraph (b) of this section prior to the transfer of a share of subsidiary stock that has a basis that does exceed its value or a deconsolidation of a subsidiary, the rules of paragraph (b) of this section shall apply immediately prior to the transfer of stock that has a basis that does not exceed its value.

(2) *Transfers of loss property in avoidance.* If a member of a consolidated group contributes an asset with a basis that exceeds its value to a partnership in a transaction described in section 721 or a corporation that is not a member of such group in a transfer described in section 351, such partnership or corporation contributes such asset to a subsidiary in a transfer described in section 351, and such contributions are undertaken with a view to avoiding the rules of paragraph (b) or (c) of this section, adjustments must be made to carry out the purposes of this section.

(3) *Anti-loss reimportation rule*—(i) *Conditions for application.* This paragraph (g)(3) applies when—

(A) A member of a group (selling group) recognized and was allowed a loss with respect to a share of stock of

S, a subsidiary or former subsidiary of the selling group;

(B) That stock loss was duplicated (in whole or in part) in S's attributes (duplicating items) at the earlier of the time that the loss was recognized or that S ceased to be a member; and

(C) Within ten years of the date that S ceased to be a member, there is a reimportation event. For this purpose, a reimportation event is any event after which a duplicating item is a reimported item. A reimported item is any duplicating item that is reflected in the attributes of any member of the selling group, including S, or, if not reflected in the attributes, would be properly taken into account by any member of the selling group (for example as the result of a carryback).

(ii) *Effect of application.* Immediately before the time that a reimported item (or any portion of a reimported item) would be properly taken into account (but for the application of this paragraph (g)(3)), such item (or such portion of the item) is reduced to zero and no deduction or loss is allowed, directly or indirectly, with respect to that item.

(iii) *Operating rules.* For purposes of this paragraph (g)(3)—

(A) The terms *member, subsidiary,* and *group* include their predecessors and successors to the extent necessary to effectuate the purposes of this section; and

(B) The reduction of a reimported item (other than duplicating items that are carried back to a consolidated return year of the selling group) is a noncapital, nondeductible expense within the meaning of §1.1502–32(b)(3)(iii).

(4) *Avoidance of recognition of gain.* (i) If a transaction is structured with a view to, and has the effect of, deferring or avoiding the recognition of gain on a disposition of stock by invoking the application of paragraph (b)(1) of this section to redetermine the basis of stock of a subsidiary, and the stock loss that gives rise to the application of paragraph (b)(1) of this section is not significant, paragraphs (b) and (c) of this section shall not apply.

(ii) If a transaction is structured with a view to, and has the effect of, deferring or avoiding the recognition of gain on a disposition of stock by invoking the application of paragraph (b)(2) of this section to redetermine the basis of stock of a subsidiary, and the duplicated loss of the subsidiary that is reflected in stock of the subsidiary owned by members of the group immediately before the deconsolidation is not significant, paragraphs (b) and (c) of this section shall not apply.

(5) *Examples.* For purposes of the examples in this section, all transactions described in section 362(a) are completed before October 22, 2004, and therefore are not subject to section 362(e)(2). The principles of this paragraph (g) are illustrated by the following examples:

Example 1. Transfers of property in the avoidance of basis redetermination rule. (i) *Facts.* In Year 1, P forms S with a contribution of $100 in exchange for 100 shares of common stock of S which at that time represents all of the outstanding stock of S. S becomes a member of the P group. In Year 2, P contributes 20 shares of common stock of S to PS, a partnership, in exchange for a 20 percent capital and profits interest in a transaction described in section 721. In Year 3, P contributes Asset A with a basis of $50 and a value of $20 to PS in exchange for an additional capital and profits interest in PS in a transaction described in section 721. Also in Year 3, PS contributes Asset A to S and P contributes an additional $80 to S in transfers to which section 351 applies. In Year 4, S sells Asset A for $20, recognizing a loss of $30. The P group uses that loss to offset income of P. In Year 5, P sells its entire interest in PS for $40.

(ii) *Analysis.* Pursuant to paragraph (g)(2) of this section, if P's contributions of S stock and Asset A to PS were undertaken with a view to avoiding the application of the basis redetermination or the loss suspension rule, adjustments must be made such that the group does not obtain more than one tax benefit from the $30 loss inherent in Asset A.

Example 2. Transfers effecting a reimportation of loss. (i) *Facts.* In Year 1, P forms S with a contribution of Asset A with a value of $100 and a basis of $120, Asset B with a value of $50 and a basis of $70, and Asset C with a value of $90 and a basis of $100 in exchange for all of the common stock of S and S becomes a member of the P group. In Year 2, in a transaction that is not part of a plan that includes the contribution, P sells the stock of S for $240, recognizing a loss of $50. At such time, the bases and values of Assets A, B, and C have not changed since their contribution to S. In Year 3, S sells Asset A, recognizing a $20 loss. In Year 3, S merges into

M in a reorganization described in section 368(a)(1)(A). In Year 8, P purchases all of the stock of M for $300. At that time, M has a $10 net operating loss. In addition, M owns Asset D, which was acquired in an exchange described in section 1031 in connection with the surrender of Asset B. Asset C has a value of $80 and a basis of $100. Asset D has a value of $60 and a basis of $70. In Year 9, P has operating income of $100 and M recognizes $20 of loss on the sale of Asset C. In Year 10, P has operating income of $50 and M recognizes $50 of loss on the sale of Asset D.

(ii) *Analysis.* P's $50 loss on the sale of S stock is entirely attributable to duplicated loss. Therefore, pursuant to paragraph (g)(3) of this section, assuming the P group cannot establish otherwise, M's $10 net operating loss is treated as attributable to assets that were owned by S on the date of the disposition and that had bases in excess of value on such date. Without regard to any other limitations on the group's use of M's net operating loss, the P group cannot use M's $10 net operating loss pursuant to paragraph (g)(3)(iii)(D) of this section. Pursuant to paragraph (g)(3)(iv) of this section and §1.1502–32(b)(3)(iii)(D), such loss is treated as a noncapital, nondeductible expense of M incurred during the taxable year that it would otherwise be absorbed, namely in Year 9. In addition, the P group is denied the use of $10 of the loss recognized on the sale of Asset C. Finally, the P group is denied the use of $10 of the loss recognized on the sale of Asset D. Pursuant to paragraph (g)(3)(iv) of this section and §1.1502–32(b)(3)(iii)(D), each such disallowed loss is treated as a noncapital, nondeductible expense of M incurred during the taxable year that includes the date of the disposition of the asset with respect to which such loss was recognized.

Example 3. Transfers to avoid recognition of gain. (i) *Facts.* P owns all of the stock of S1 and S2. The S2 stock has a basis of $400 and a value of $500. S1 owns 50% of the S3 common stock with a basis of $150. S2 owns the remaining 50% of the S3 common stock with a basis of $100 and a value of $200 and one share of S3 preferred stock with a basis of $10 and a value of $9. P intends to sell all of its S2 stock to an unrelated buyer. P, therefore, engages in the following steps to dispose of S2 without recognizing a substantial portion of the built-in gain in S2. First, P causes a recapitalization of S3 in which S2's S3 common stock is exchanged for new S3 preferred shares. P then sells all of its S2 stock. Immediately after the sale of the S2 stock, S3 is a member of the P group.

(ii) *Analysis.* Pursuant to paragraph (b)(4) of this section, because S2 owns stock of S3 (another subsidiary of the same group) and, immediately after the sale of the S2 stock, S3 is a member of the group, then for purposes of applying paragraph (b) of this section, S2 is deemed to have transferred its S3 stock. Because S3 is a member of the group immediately after the transfer of the S2 stock and the S3 stock deemed transferred has a basis in excess of value, the group in the S3 stock is redetermined pursuant to paragraph (b)(1) of this section immediately prior to the sale of the S2 stock. Accordingly, P would recognize only $1 of gain on the sale of its S2 stock. However, because the recapitalization of the S3 was structured with a view to, and has the effect of, avoiding the recognition of gain on a disposition of stock by invoking the application of paragraph (b) of this section, paragraph (g)(4)(i) of this section applies. Accordingly, paragraph (b) of this section does not apply upon P's disposition of the S2 stock and P recognizes $100 gain on the disposition of the S2 stock.

(6) *General anti-avoidance rule.* If a taxpayer acts with a view to avoid the purposes of this section, appropriate adjustments will be made to carry out the purposes of this section.

(h) *Application of other rules of law.* See §1.1502–80(a) regarding the general applicability of other rules of law.

(i) [Reserved]

(j) *Effective/applicability dates.* This section applies after September 16, 2008. For prior law, see §§1.1502–35 and 1.1502–35T as contained in 26 CFR part 1 in effect on April 1, 2008.

[T.D. 9254, 71 FR 13010, Mar. 14, 2006, as amended by T.D. 9264, 71 FR 30603, 30607, May 30, 2006; T.D. 9254, 71 FR 48473, Aug. 21, 2006; T.D. 9322, 72 FR 17805, Apr. 10, 2007; T.D. 9342, 72 FR 39736, July 20, 2007; T.D. 9424, 73 FR 53951, Sept. 17, 2008; 75 FR 10172, Mar. 5, 2010]

§1.1502–36 Unified loss rule.

(a) *In general*—(1) *Scope.* This section provides rules for adjusting members' bases in stock of a subsidiary (S) and for reducing S's attributes when a member (M) transfers a loss share of S stock. See paragraph (f) of this section for definitions of the terms used in this section, including *transfer* and *value*.

(2) *Purpose.* The rules in this section have two principal purposes. The first is to prevent the consolidated return provisions from reducing a group's consolidated taxable income through the creation and recognition of noneconomic loss on S stock. The second is to prevent members (including former members) of the group from collectively obtaining more than one tax benefit from a single economic loss. Additional purposes are set forth in

other paragraphs of this section. The rules of this section must be interpreted and applied in a manner that is consistent with and reasonably carries out the purposes of this section.

(3) *Overview*—(i) *General application of section*. This section applies when M transfers a share of S stock and, after taking into account the effects of all applicable rules of law (even if the adjustments required by such provisions are not deemed effective until after the transfer, such as certain adjustments required under sections 108 and 1017 and § 1.1502–28), the share is a loss share. When this section applies, paragraph (b) of this section applies first and may redetermine members' bases in their shares of S stock. If the transferred share is a loss share after any basis redetermination under paragraph (b) of this section, paragraph (c) of this section applies and may reduce M's basis in the transferred loss share. If the transferred share is a loss share after any basis reduction required by paragraph (c) of this section, paragraph (d) of this section applies and may reduce attributes of S and subsidiaries that are lower-tier to S. Although the determination of whether there is a transfer of a loss share is made as of the transfer, this section applies, and any adjustments it requires are given effect, immediately before the transfer. Paragraphs (e), (f), and (g) of this section provide general operating rules (including rules for transfers of S stock between members), definitions, and an anti-abuse rule, respectively.

(ii) *Stock of multiple subsidiaries transferred in the transaction*—(A) *Initial application of section to transferred shares in lowest tier*. If shares of stock of more than one subsidiary are transferred in a transaction, the application of this section begins at the lowest tier. If no transferred shares of stock of the lowest-tier subsidiary (S2) are loss shares, any gain recognized with respect to the S2 shares immediately tiers up and adjusts members' bases in subsidiary stock under § 1.1502–32. However, if any of the transferred S2 shares are loss shares, paragraph (b) of this section applies with respect to those shares. If, after the application of paragraph (b) of this section, any transferred S2 shares are still loss shares, paragraph (c) of this section applies with respect to those shares. If, after the application of paragraph (c) of this section, any transferred S2 shares are still loss shares and P makes an election under paragraph (d)(6) of this section with respect to those S2 shares, then paragraph (d) of this section applies with respect to those shares, but only to the extent necessary to give effect to the election. After taking into account the effects of any adjustments required by this initial application of this section, recognized gain or loss is computed on all transferred S2 shares. Any adjustments under paragraph (b) or (c) of this section, the effect of any election under paragraph (d)(6) of this section, any gain or loss recognized on the transferred S2 shares (whether allowed or disallowed), and any other related or resulting adjustments then tier-up and apply to adjust members' bases in subsidiary stock under § 1.1502–32.

(B) *Initial application of section to transferred shares in higher tiers*. After taking into account the effects of any adjustments described in paragraph (a)(3)(ii)(A) of this section, transferred shares in the next higher tier, and then in each next higher tier successively, other than the transferred loss shares at the highest tier, are treated in the manner described in paragraph (a)(3)(ii)(A) of this section.

(C) *Application of section to transferred shares in highest tier*. After paragraphs (b) and (c) of this section, and, to the extent necessary to give effect to any election under paragraph (d)(6) of this section, paragraph (d) of this section, have been applied to or with respect to all lower-tier transferred loss shares, and after all lower-tier adjustments have been taken into account (whether resulting from the application of paragraph (b) or (c) of this section, an election under paragraph (d)(6) of this section, the recognition of gain or loss on a transfer, or otherwise), paragraphs (b), then (c), and then (d) of this section apply with respect to the highest-tier shares that are transferred loss shares.

(D) *Final application of section to transferred shares in lower tiers*. After paragraph (d) of this section has been applied with respect to transferred loss shares in the highest tier, it is applied

with respect to transferred shares in each next lower tier, successively, to the extent such shares are loss shares after the application of paragraph (d) of this section.

(4) *Other rules of law and coordination with deferral and disallowance provisions.* In general, this section applies and has effect immediately upon the transfer of a loss share even if the loss is deferred, disallowed, or otherwise not taken into account under any other applicable rules of law. However, see paragraph (e)(3) of this section for special rules applicable to shares of S stock transferred in an intercompany transaction. See section §1.1502–80(a) for the general applicability of other rules of law and a limitation on duplicative adjustments.

(5) *Nomenclature, factual assumptions adopted in this section.* Unless otherwise stated, for purposes of this section, the following nomenclature and assumptions are adopted. P is the common parent of a consolidated group of which S, M, and M1 are members. X is not a member of the P group. If a corporation has preferred stock outstanding, it is stock described in section 1504(a)(4). The examples set forth the only facts, elections, and activities relevant to the example. All transactions are between unrelated persons and are independent of each other. Tax liabilities and their effect, and the application of any other loss disallowance or deferral provisions of the Internal Revenue Code (Code) or regulations, including but not limited to section 267, are disregarded. All persons report on a calendar year basis and use the accrual method of accounting. All parties comply with filing and other requirements of this section and all other provisions of the Code and regulations.

(b) *Basis redetermination to reduce disparity*—(1) *In general*—(i) *Purpose and scope.* The rules of this paragraph (b) reduce the extent to which there is disparity in members' bases in shares of S stock. These rules supplement the operation of the investment adjustment system; their purpose is to prevent the realization of noneconomic loss and facilitate the elimination of duplicated loss when members hold S shares with disparate bases. The rules of this paragraph (b) only reallocate investment adjustments previously applied to members' bases in shares of S stock, thus they do not alter the aggregate amount of basis in shares of S stock held by members or the aggregate amount of investment adjustments applied to shares of S stock.

(ii) *Special rules for applicability of redetermination rule.* Notwithstanding the general rule in paragraph (b)(2) of this section, members' bases in shares of S stock are not redetermined under this paragraph (b) if—

(A) There is no disparity among members' bases in shares of S common stock and no member owns a share of S preferred stock with respect to which there is unrecognized gain or loss; or

(B) All the shares of S stock held by members are transferred to one or more nonmembers, become worthless under section 165 (taking into account the provisions of §1.1502–80(c)), or a combination thereof, in one fully taxable transaction. However, in such a case, P may elect to redetermine such bases under this paragraph (b). Such an election is made in the manner provided in paragraph (e)(5) of this section. If stock of more than one subsidiary is transferred in the transaction, the election may be made with respect to one or more of such subsidiaries.

(iii) *Investment adjustment.* For purposes of this paragraph (b), the term *investment adjustment* includes adjustments specially allocated under §1.1502–32(c)(1)(ii)(B) and remaining adjustments described in §1.1502–32(c)(1)(iii). In applying any provision of this section, the term includes all such adjustments reflected in the basis of the share as of the application of the provision, whether originally allocated under §1.1502–32 or otherwise. The term therefore includes adjustments previously reallocated to the share, and it does not include adjustments previously reallocated from the share, whether pursuant to this section or any other provision of law. It also includes the proportionate amount of adjustments reflected in the exchanged basis of a share, such as the basis determined under section 358 in connection with a reorganization or a transaction qualifying under section 355.

(2) *Basis redetermination rule.* If M transfers a loss share of S stock, all

members' bases in all their shares of S stock are subject to redetermination under this paragraph (b). The determination of whether a share is a loss share is made as of the transfer, taking into account the effects of all applicable rules of law. The redeterminations are made immediately before applying paragraph (c) of this section and in accordance with the following:

(i) *Decreasing the bases of transferred loss shares*—(A) *Removing positive investment adjustments from transferred loss shares of common stock.* M's basis in each of its transferred loss shares of S common stock is first reduced, but not below value, by removing positive investment adjustments previously applied to the basis of the share. The positive investment adjustments removed from transferred loss shares of S common stock are reallocated under paragraph (b)(2)(ii) of this section after negative investment adjustments are reallocated under paragraph (b)(2)(i)(B) of this section.

(B) *Reallocating negative investment adjustments from shares of S common stock.* If a transferred share is still a loss share after applying paragraph (b)(2)(i)(A) of this section, M's basis in the share is reduced, but not below value, by reallocating negative investment adjustments to the transferred loss share (whether common or preferred stock) from members' shares of S common stock that are not transferred loss shares. The adjustments reallocated under this paragraph (b)(2)(i)(B) are reallocated and applied first to M's bases in transferred loss shares of S preferred stock and then to M's bases in transferred loss shares of S common stock. Reallocations under this paragraph (b)(2)(i)(B) are made in a manner that, to the greatest extent possible, reduces the disparity among members' bases in all transferred loss shares of S preferred stock, and reduces the disparity among members' bases in all shares of S common stock.

(ii) *Increasing the bases of gain preferred and all common shares*—(A) *Preferred stock.* After the application of paragraph (b)(2)(i) of this section, the positive investment adjustments removed from transferred loss shares of S common stock under paragraph (b)(2)(i)(A) of this section are reallocated and applied to increase, but not above value, members' bases in shares of S preferred stock (without regard to whether such shares are transferred in the transaction). Reallocations under this paragraph (b)(2)(ii)(A) are made in a manner that, to the greatest extent possible, reduces the disparity among members' bases in all shares of S preferred stock.

(B) *Common stock.* Any positive investment adjustments removed from transferred loss shares of S common stock under paragraph (b)(2)(i)(A) of this section and not reallocated and applied to S preferred shares are reallocated and applied to increase members' bases in shares of S common stock. Reallocations are made to shares of S common stock without regard to whether a particular share is a loss share or a transferred share, and without regard to the share's value. Reallocations under this paragraph (b)(2)(ii)(B) are made in a manner that, to the greatest extent possible, reduces the disparity among members' bases in all shares of S common stock.

(iii) *Operating rules*—(A) *Method.* In general, reallocations should be made first with respect to the earliest available adjustments. However, the overall application of this paragraph (b) to a transaction must be made in a manner that, to the greatest extent possible, reduces basis disparity (as provided in paragraphs (b)(2)(i)(B) and (b)(2)(ii) of this section). The specific reallocation of an investment adjustment under this paragraph (b) may be made using any reasonable method or formula that is consistent with the provisions of this paragraph (b)(2) and furthers the purposes of this section.

(B) *Limits on reallocation*—(*1*) *Restriction to members' outstanding shares.* Investment adjustments can only be reallocated to shares that were held by members at the time the adjustment was originally applied.

(*2*) *Limitation by prior use*—(*i*) *In general.* In order to prevent the reallocation of investment adjustments from either increasing or decreasing members' aggregate bases in subsidiary stock, no investment adjustment (positive or negative) may be reallocated under this paragraph (b)(2) to the extent that it was (or would have been)

used prior to the time that it would otherwise be reallocated under this paragraph (b)(2). For this purpose, an investment adjustment was used (or would have been used) to the extent that it was reflected in (or would have been reflected in) the basis of a share of subsidiary stock and the basis of that share has already been taken into account, directly or indirectly, in determining income, gain, deduction, or loss (including by affecting the application of this section to a prior transfer of subsidiary stock) or in determining the basis of any property that is not subject to § 1.1502–32. However, if the prior use was in an intercompany transaction, an investment adjustment may be reallocated to the extent that § 1.1502–13 has prevented the gain or loss on the transaction from being taken into account. (In that case, appropriate adjustments must be made to the intercompany item from the prior intercompany transaction that has not yet been taken into account.) Further, if an investment adjustment was reflected in (or would have been reflected in) the basis of a share that has been taken into account, the limitation on reallocation under this paragraph (b)(2)(iii)(B)(*2*) does not apply to the extent the basis of that share would not change as a result of the reallocation (for example, because the reallocation is between shares that are both lower-tier to the share with the previously used basis). See § 1.1502–32(c)(1)(ii)(B) regarding special allocations applicable to the tier-up of the reallocated investment adjustment if the reallocation is limited under this paragraph (b)(2)(iii)(B)(*2*) due to prior use at a higher tier.

(*ii*) *Example*. The application of this paragraph (b)(2)(iii)(B)(*2*) is illustrated by the following example:

Example. (i) *Facts*. P owns all 20 shares of M stock, and 10 shares of S stock. M owns the remaining 10 shares of S stock. In year 1, S recognizes $200 of income that results in a $10 positive investment adjustment being allocated to each share of S stock. The group does not recognize any other items. The $100 positive adjustment to M's basis in the S stock tiers up, and results in a $5 positive adjustment to each share of M stock. In year 2, P sells one share of M stock and recognizes a gain. In year 3, M sells one loss share of S stock, and this paragraph (b) applies and requires a reallocation of the year 1 positive investment adjustment applied to the basis of the transferred S share.

(ii) *Application of limitation by prior use*. M's basis in the transferred loss share of S stock reflects a $10 positive investment adjustment attributable to S's year 1 income. Under the general rule of this paragraph (b), that $10 would be subject to reallocation to reduce basis disparity. However, that $10 adjustment had originally tiered up to adjust P's basis in its M shares and, as a result, $.50 of that adjustment was reflected in P's basis in each share of M stock. When P sold the share of M stock, the basis of that share (which included the tiered-up $.50) was used in determining the gain on the sale. Thus, $.50 of the $10 investment adjustment originally allocated to the transferred S share that tiered-up to the sold M share was previously used and, as such, cannot be reallocated in a manner that would (if it were the original allocation) affect the basis of the sold M share. Accordingly, no more than $9.50 of the adjustment to M's transferred S share could be reallocated to P's shares of S stock. If so, under the special allocation rule in § 1.1502–32(c)(1)(ii)(B), the tier-up of this $9.50 would only be allocated among P's remaining 19 shares of M stock. Alternatively, all $10 of the investment adjustment could be reallocated to M's other S shares (because the tier-up to P's M shares would have been the same regardless which of M's shares of S stock were adjusted).

(iii) *Application of limitation where adjustment would have been used*. The facts are the same as in paragraph (i) of this *Example* except that M does not sell any shares of S stock and, in year 3, P sells a loss share of S stock. As in paragraph (i) of this *Example*, when P sold the share of M stock, the basis of that share was used in determining the gain on the share. When P sells the loss share of S stock, the $10 positive investment adjustment from S's year 1 income cannot be reallocated in a manner that would (if it were the original adjustment) affect the basis of the sold M share. If this $10 positive investment adjustment had originally been allocated to the S shares held by M, $.50 of the $10 investment adjustment would have tiered up to the M share that P sold, would have been reflected in P's basis in that M share, and would have been used in determining P's gain or loss on the sale. Accordingly, up to $9.50 of the $10 investment adjustment applied to the basis of P's transferred S share could be reallocated to M's shares of S stock. If so, under the special allocation rule in § 1.1502–32(c)(1)(ii)(B), the tier-up of this $9.50 would only be allocated among P's remaining 19 shares of M stock. Alternatively, all $10 of the investment adjustment could be reallocated to P's other S shares.

(3) *Examples*. The general application of this paragraph (b) is illustrated by the following examples:

Example 1. Transfer of stock received in section 351 exchange. (i) *Redetermination to prevent noneconomic loss.* (A) *Facts.* For many years, M has owned two assets, Asset 1 and Asset 2. On January 1, year 1, M receives the only four outstanding shares of S common stock (Block 1 shares) in exchange for Asset 1, which has a basis and value of $80. Section 351 applies to the exchange and, therefore, under section 358, M's aggregate basis in the Block 1 shares is $80 ($20 per share). On July 1, year 2, M receives another share of S common stock (Block 2 share) in exchange for Asset 2, which has a basis of $0 and value of $20. Section 351 applies to this exchange and, under section 358, M's basis in the Block 2 share is $0. On October 1, year 3, S sells Asset 2 for $20, recognizing a $20 gain. On December 31, year 3, M sells one of its Block 1 shares to X for $20. After taking into account the effects of all applicable rules of law, M's basis in each Block 1 share is $24 (M's original $20 basis increased under §1.1502–32 by $4, the share's allocable portion of the $20 gain recognized on the sale of Asset 2). In addition, M's basis in its Block 2 share is $4 (M's original $0 basis increased under §1.1502–32 by $4 (the share's allocable portion of the $20 gain recognized on the sale of Asset 2)). M's sale of the Block 1 share is a transfer of a loss share and therefore subject to this section.

(B) *Basis redetermination under this paragraph (b).* Under this paragraph (b), M's bases in all its shares of S stock are subject to redetermination. First, paragraph (b)(2)(i)(A) of this section applies to reduce M's basis in the transferred loss share, but not below value, by removing positive investment adjustments applied to the basis of the share. Accordingly, M's basis in the transferred Block 1 share is reduced by $4 (the amount of the positive investment adjustment applied to the share), from $24 to $20. Even if there were negative investment adjustments applied to adjust the bases of nontransferred common shares, no further reduction to the basis of the share would be required under this paragraph (b) because the basis of the transferred share is then equal to the share's value. Under paragraph (b)(2)(ii)(B) of this section, the positive investment adjustment removed from the transferred loss share is reallocated and applied to increase M's bases in its S common shares in a manner that reduces disparity in M's bases in all the S common shares, to the greatest extent possible. Accordingly, the $4 positive investment adjustment removed from the Block 1 share is reallocated and applied to the basis of the Block 2 share, increasing it from $4 to $8.

(C) *Application of paragraphs (c) and (d) of this section.* Because M's sale of the Block 1 share is not a transfer of a loss share after the application of this paragraph (b), neither paragraph (c) of this section nor paragraph (d) of this section applies to the transfer.

(ii) *Redetermination to eliminate duplicated loss.* (A) *Facts.* The facts are the same as in paragraph (i)(A) of this *Example 1*, except that, at the time of the second contribution, the value of Asset 1 had declined to $20 and so, instead of contributing Asset 2, M contributed Asset 3 to S in exchange for the Block 2 share. At the time of that exchange, Asset 3 had a basis and value of $5. On October 1, year 3, S sells Asset 1 for $20, recognizing a $60 loss that is absorbed by the group. On December 31, year 3, M sells one of its Block 1 shares to X for $5. After taking into account the effects of all applicable rules of law, M's basis in each Block 1 share is $8 (M's original $20 basis decreased under §1.1502–32 by $12 (the share's allocable portion of the $60 loss recognized on the sale of Asset 1)). M's basis in its Block 2 share is an excess loss account of $7 (M's original basis of $5 reduced under §1.1502–32 by $12, the share's allocable portion of the loss recognized on the sale of Asset 1). M's sale of the Block 1 share is a transfer of a loss share and therefore subject to this section.

(B) *Basis redetermination under this paragraph (b).* Under this paragraph (b), M's bases in all its shares of S stock are subject to redetermination. There are no positive investment adjustments and so there is no adjustment under paragraph (b)(2)(i)(A) of this section. However, under paragraph (b)(2)(i)(B) of this section, M's basis in the transferred Block 1 share is reduced, but not below value, by reallocating negative investment adjustments from common shares that are not transferred loss shares. In total, there were $48 of negative investment adjustments applied to common shares that are not transferred loss shares. Accordingly, M's basis in the Block 1 share is reduced by $3, from $8 to its value of $5. Under paragraph (b)(2)(i)(B) of this section, the negative investment adjustments applied to the transferred share are reallocated from (and therefore cause an increase in the basis of) S common shares that are not transferred loss shares in a manner that reduces disparity among members' bases in all S common shares to the greatest extent possible. Accordingly, the $3 negative investment adjustment reallocated and applied to the transferred Block 1 share is reallocated entirely from the Block 2 share, increasing the basis in the Block 2 share from an excess loss account of $7 to an excess loss account of $4.

(C) *Application of paragraphs (c) and (d) of this section.* Because M's sale of the Block 1 share is not a transfer of a loss share after the application of this paragraph (b), neither paragraph (c) of this section nor paragraph (d) of this section applies to the transfer.

(iii) *Nonapplicability of redetermination rule to sale of entire interest.* The facts are the

same as in paragraph (ii)(A) of this *Example 1*, except that, on December 31, year 3, M sells all its shares of S stock to X for $25. M's sale of the S stock to X is a transfer of all of the shares of S stock held by members to one or more nonmembers in one fully taxable transaction and, therefore, basis is not redetermined under this paragraph (b). Accordingly, the sale of the Block 1 shares remains a transfer of loss shares and, as such, subject to paragraphs (c) and (d) of this section. However, paragraphs (c)(7) and (d)(3)(i)(A) of this section apply netting principles to prevent adjustments under either paragraph (c) or paragraph (d) of this section, respectively. Alternatively, the group could elect to apply this paragraph (b). In that case, the $12 negative adjustment applied to the Block 2 shares would be reallocated to the Block 1 shares with the result that there would be no loss (or gain) on any of the transferred shares following the application of this paragraph (b). In that case, there would be no further application of this section to the transfer.

(iv) *Transfer of entire interest, partially taxable.* The facts are the same as in paragraph (iii) of this *Example 1*, except that, instead of selling the Block 2 share to X, M contributes the share to a nonmember in a section 351 exchange that is part of the same transaction. Although all the S shares held by members are transferred in the transaction, not all the shares are transferred to one or more nonmembers in one fully taxable transaction. Therefore, paragraph (b)(1)(ii)(B) of this section does not apply and M must redetermine its bases in its shares of S stock under this paragraph (b). In total, there were $12 of negative investment adjustments applied to common shares that are not transferred loss shares (the Block 2 share, a gain share). Accordingly, M's basis in each of the Block 1 shares is reduced by $3, from $8 to its value of $5. Under paragraph (b)(2)(i)(B) of this section, the negative investment adjustments applied to the transferred shares are reallocated from (and therefore cause an increase in the basis of) S shares that are not transferred loss shares in a manner that reduces disparity among members' bases in all S common shares to the greatest extent possible. Accordingly, the $12 negative investment adjustment reallocated and applied to the transferred Block 1 shares is reallocated entirely from the Block 2 share, increasing the basis in the Block 2 share from an excess loss account of $7 to a basis of $5. Because M's transfer is not a transfer of loss shares after the application of this paragraph (b), neither paragraph (c) of this section nor paragraph (d) of this section applies to the transfer.

Example 2. Redetermination increases basis of transferred loss share. (i) *Facts.* On January 1, year 1, M owns all 10 outstanding shares of S common stock. Five of the shares have a basis of $20 per share (Block 1 shares) and five of the shares have a basis of $10 per share (Block 2 shares). S's only asset, Asset 1, has a basis of $50. S has no other attributes. On October 1, year 1, S sells Asset 1 for $100, recognizing a $50 gain. On December 31, year 2, M sells one Block 1 share and one Block 2 share to X for $10 per share. After taking into account the effects of all applicable rules of law, M's basis in each Block 1 share is $25 (M's original $20 basis increased under § 1.1502–32 by $5, the share's allocable portion of the $50 gain recognized on the sale of Asset 1), and M's basis in each Block 2 share is $15 (M's original $10 basis increased under § 1.1502–32 by $5, the share's allocable portion of the $50 gain recognized on the sale of Asset 1). M's sale of the Block 1 and Block 2 shares is a transfer of loss shares and therefore subject to this section.

(ii) *Basis redetermination under this paragraph (b).* Under this paragraph (b), M's bases in all its shares of S stock are subject to redetermination. First, paragraph (b)(2)(i)(A) of this section applies to reduce M's basis in the transferred Block 1 and Block 2 shares, but not below value, by removing the positive investment adjustments applied to the bases of the transferred loss shares. Accordingly, the basis of the transferred Block 1 share is reduced by $5, from $25 to $20. The basis of the transferred Block 2 share is also reduced by $5, from $15 to $10. (Although the transferred Block 1 share is still a loss share, there is no reduction to its basis under paragraph (b)(2)(i)(B) of this section because there were no negative investment adjustments applied to the bases of the S common shares that are not transferred loss shares.) Next, paragraph (b)(2)(ii)(B) of this section applies to reallocate and apply the $10 of positive investment adjustments removed from the transferred loss shares to increase M's bases in its S common shares in a manner that reduces the disparity in its bases in all S common shares to the greatest extent possible. Accordingly, of the $10 of positive investment adjustments to be reallocated, $6 is reallocated and applied to the basis of the transferred Block 2 share (increasing it from $10 to $16) and $4 is reallocated and applied equally to the basis of each of the four retained Block 2 shares (increasing the basis of each from $15 to $16). After giving effect to the reallocations under this paragraph (b), M's basis in each retained Block 1 share is $25, M's basis in the transferred Block 1 share is $20, and M's basis in each Block 2 share is $16.

(iii) *Application of paragraph (c) of this section.* After the application of this paragraph (b), M's sale of the Block 1 and Block 2 shares is still a transfer of loss shares and, accordingly, subject to paragraph (c) of this section. No adjustment is required to the basis of the transferred Block 1 share under paragraph (c) of this section because, after

its basis is redetermined under this paragraph (b), the net positive adjustment to the basis of the share is $0. See paragraph (c)(3) of this section. However, under paragraph (c) of this section M's basis in the transferred Block 2 share is reduced by $6 (the lesser of its net positive adjustment, $6, and its disconformity amount, $6), from $16 to $10, its value. See paragraph (c)(2) of this section.

(iv) *Application of paragraph (d) of this section*. After the application of paragraph (c) of this section, M's sale of the Block 1 share is still a transfer of a loss share and, accordingly, subject to paragraph (d) of this section. No adjustment is required under paragraph (d) of this section because there is no aggregate inside loss. See paragraph (d)(3)(iii) of this section. Because M's sale of the Block 2 share is no longer a transfer of a loss share after the application of paragraph (c) of this section, paragraph (d) of this section does not apply to the transfer of the Block 2 share.

Example 3. Tiered subsidiaries. (i) *Transfer of all shares of common stock*. (A) *Facts*. P owns the sole outstanding share of S stock with a basis of $100, and the sole outstanding share of M stock with a basis of $300. M has $200 and owns an asset with a basis of $0. S owns one asset, Asset 1, with a basis of $100. At a time when Asset 1 has a value of $200, S issues a second share of common stock to M in exchange for $200. Later S sells Asset 1 for $200, recognizing a $100 gain. After taking into account the effects of all applicable rules of law, P's basis in its S stock is $150 (P's original $100 basis increased under § 1.1502–32 by $50, the share's allocable portion of the $100 gain recognized on the sale of Asset 1), M's basis in its S stock is $250 (M's original $200 basis increased under § 1.1502–32 by $50, the share's allocable portion of the $100 gain recognized on the sale of Asset 1), and P's basis in its M stock is $350 (P's original $300 basis increased under § 1.1502–32 by $50, the tier-up of M's increase in its basis in its S stock). P then sells its M share and its S share to X for $300 and $200, respectively. M and S are not members of the same consolidated group immediately after the sale. Therefore, the M share and both of the S shares are transferred in the transaction. Regarding P's sale of its share of S stock and its share of M stock, see paragraph (f)(10)(i)(A) of this section (ceasing to own a share in a taxable transaction) and paragraph (f)(10)(i)(C) of this section (nonmember acquires share); regarding M's share of S stock, see paragraph (f)(10)(i)(B) of this section (ceasing to be members of the same group). The application of this section begins with respect to the stock of S, the subsidiary at the lowest tier in which there is a transfer of subsidiary stock. See paragraph (a)(3)(ii) of this section. Although both P and M transfer their S shares, only M's S share is a loss share. Thus, only M's transfer is a transfer of a loss share of S stock and only M's transfer is subject to this section.

(B) *Application of section to transferred S shares*. Although only M's transfer is subject to this section, all members' bases in their shares of S stock are subject to redetermination under this paragraph (b). First, paragraph (b)(2)(i)(A) of this section applies to reduce M's basis in its transferred S share, but not below value, by removing the positive investment adjustment applied to that share. Accordingly, the basis of M's S share is reduced by $50, from $250 to $200 (under § 1.1502–32, that redetermination adjustment tiers up to reduce P's basis in its M stock by $50, from $350 to $300). Because there are no negative adjustments to reallocate under paragraph (b)(2)(i)(B) of this section, paragraph (b)(2)(ii)(B) of this section then applies to reallocate and apply the $50 positive investment adjustment removed from the transferred loss S share to increase P's basis in its S share in a manner that reduces disparity among members' bases in all S common shares to the greatest extent possible. Accordingly, all $50 of the positive investment adjustment is reallocated and applied to P's basis in its S share (increasing the basis from $150 to $200). Because M's transfer of its S share is not a transfer of a loss share after the application of this paragraph (b), neither paragraph (c) of this section nor paragraph (d) of this section applies to that transfer.

(C) *Application of section to transfers at next higher tier*. After the adjustments to M's share of S stock are given effect, P's transfer of its share of M stock is not a transfer of a loss share and so this section does not apply to that transfer.

(D) *Result of application of section*. After the application of this section, P recognizes no gain or loss on its sale of either the S share or the M share. In addition, the unrecognized (noneconomic) loss in M's basis in its S share is eliminated. The results would be the same if, in addition to the facts in paragraph (i)(A) of this *Example 3*, M transferred its S share to X in a fully taxable transaction and, as permitted under paragraph (b)(1)(ii)(B) of this section, P elected to redetermine basis under this paragraph (b).

(ii) *Transfer of less than all lower-tier shares of stock*. (A) *Facts*. The facts are the same as in paragraph (i)(A) of this *Example 1*, except that M and S are members of the same consolidated group immediately after the sale. Therefore, in this case, M's S share is not transferred and so this section has no application with respect to M's S share. P's transfer of its S share is not a transfer of a loss share and so is also not subject to this section. However, P's sale of its share of M stock is a transfer of a loss share and is subject to this section.

(B) *Basis redetermination under this paragraph (b)*. Although P's transfer of its share of M stock is subject to this section, this

paragraph (b) does not apply to the transfer because there is only one share of M stock outstanding (and so there can be no disparity among members' bases in common shares and there are no outstanding preferred shares with respect to which there can be unrecognized gain or loss). Accordingly, after the application of this paragraph (b), P's sale of its M share is still a transfer of a loss share and therefore subject to paragraph (c) of this section.

(C) *Application of paragraphs (c) and (d) of this section.* Under paragraph (c) of this section, P must reduce its basis in its M share by $50, the lesser of its net positive adjustment ($50, see paragraph (c)(3) of this section) and its disconformity amount ($150, see paragraphs (c)(4), (c)(5), and (c)(6) of this section). As a result, the share is no longer a loss share and the transfer is not subject to paragraph (d) of this section.

(D) *Result of application of section.* After the application of this section, P recognizes a $50 gain on its sale of the S share and no loss on its sale of the M share. Although there is unrecognized loss preserved in M's basis in its S share, if M later transfers the share when it is a loss share, that transfer will be subject to this section.

Example 4. Application to outstanding common and preferred shares. (i) *Facts.* P owns all the stock of M and all eight outstanding shares of S common stock. S also has two shares of nonvoting preferred stock outstanding; the preferred shares each have a $100 annual, cumulative preference as to dividends. M owns one of the preferred shares (PS1) and P owns the other (PS2). On January 1, year 1, the bases and values of the outstanding S shares are:

	Preferred		Common							
	PS1 (M)	PS2 (P)	CS1 (P)	CS2 (P)	CS3 (P)	CS4 (P)	CS5 (P)	CS6 (P)	CS7 (P)	CS8 (P)
Basis	1250	990	1025	710	550	400	375	250	215	100
Value	1000	1000	375	375	375	375	375	375	375	375

(A) As of January 1, year 1, there are no arrearages on the preferred stock. In year 1, S has a $1100 capital loss and $100 of ordinary income. The group absorbs the loss and the negative remaining adjustment of $1000 is allocable entirely to the common stock, equally to each common share ($125 per share). See § 1.1502–32(c)(1)(iii) and (c)(2).

(B) In year 2, S has $700 of ordinary income and a $100 ordinary loss. Also, on October 1, year 2, S declares and makes a $200 dividend distribution with respect to the preferred stock ($100 per share). Under § 1.1502–32(c)(1)(i), a negative adjustment of $100 is first allocated to each of the preferred shares to reflect the declaration of the dividend. The $600 positive remaining adjustment determined under § 1.1502–32(c)(1)(iii) (reflecting S's net income reduced by the distribution) is then allocated to each of the preferred shares to the extent of its entitlement to dividends accruing in year 1 and year 2 ($200 per share). See § 1.1502–32(c)(1)(iii) and (c)(3). The $200 of the positive remaining adjustment not allocated to the preferred shares is then allocated to the common stock, equally to each common share ($25 per share). See § 1.1502–32(c)(1)(iii) and (c)(2). After taking into account the effects of all applicable rules of law, the adjusted bases and the values of the shares as of January 1, year 3, are:

	Preferred		Common							
	PS1 (M)	PS2 (P)	CS1 (P)	CS2 (P)	CS3 (P)	CS4 (P)	CS5 (P)	CS6 (P)	CS7 (P)	CS8 (P)
Basis	1250	990	1025	710	550	400	375	250	215	100
Year 1§ 1.1502–32 adjustments	N/A	N/A	−125	−125	−125	−125	−125	−125	−125	−125
Year 2§ 1.1502–32 adjustments	−100	−100	+25	+25	+25	+25	+25	+25	+25	+25
	+200	+200								
	+100	+100								
Adjusted basis	1350	1090	925	610	450	300	275	150	115	0
Value	1100	1100	275	275	275	275	275	275	275	275
Unrecognized gain/(loss)	(250)	10	(650)	(335)	(175)	(25)	0	125	160	275

(C) On January 1, year 3, M sells PS1 for $1100 and P sells CS2 for $275. The sales of PS1 and CS2 are transfers of loss shares and therefore subject to this section.

(ii) *Basis redetermination under this paragraph (b).* Under this paragraph (b), all members' bases in shares of S stock are subject to

redetermination in accordance with the following:

(A) *Removing positive investment adjustments from transferred loss common shares.* First, paragraph (b)(2)(i)(A) of this section applies to reduce P's basis in CS2, but not below value, by removing the positive investment adjustment applied to the basis of the share. Accordingly, P's basis in CS2 is reduced by $25, from $610 to $585.

(B) *Reallocating negative investment adjustments from common shares that are not transferred loss shares.* Because the transferred shares remain loss shares after the removal of positive investment adjustments, their bases are further reduced under paragraph (b)(2)(i)(B) of this section, but not below value, by reallocating negative investment adjustments applied to common shares that are not transferred loss shares. Reallocations are made first to preferred shares and then to the common shares, in a manner that reduces disparity among members' bases in transferred loss preferred shares, and reduces disparity among members' bases in all common shares, to the greatest extent possible. The loss on PS1 is $250, the remaining loss on CS2 is $310, and the total amount of negative investment adjustments applied to shares that are not transferred loss shares is $875 (the sum of the negative adjustments applied to all common shares other than CS2). Thus, $250 of negative investment adjustments are reallocated and applied to the basis of PS1, reducing it to the share's value, $1100. The negative investment adjustments are reallocated from the common shares that are not transferred loss shares in a manner that reduces disparity among members' bases in all common shares to the greatest extent possible. The negative investment adjustments may be reallocated to PS1 from the common shares that are not transferred loss shares as follows: $125 from each of CS7 and CS8. Such reallocations increase the basis of CS7 by $125, from $115 to $240, and increase the basis of CS8 by $125, from $0 to $125. Negative investment adjustments are then reallocated to CS2 from the common shares that are not transferred loss shares in a manner that reduces disparity among members' bases in all common shares to the greatest extent possible. The negative investment adjustments may be reallocated to CS2 from the other common shares as follows: $80 from CS4, $105 from CS5, and $125 from CS6. Such reallocations reduce the basis of CS2 by $310, from $585 to $275, increase the basis of CS4 by $80, from $300 to $380, increase the basis of CS5 by $105, from $275 to $380, and increase the basis of CS6 by $125, from $150 to $275. However, there may be other reasonable reallocations.

(C) *Increasing basis by reallocated positive investment adjustments.* Under paragraph (b)(2)(ii)(A) of this section, the $25 positive investment adjustment removed from CS2 (the transferred loss common share) is then reallocated and applied to increase the basis of preferred shares, but not above value. Accordingly, $10 of that amount is reallocated to PS2, increasing its basis from $1090 to $1100, its value. Under paragraph (b)(2)(ii)(B) of this section, the remaining $15 is reallocated and applied to the common shares in a manner that reduces disparity among members' bases in all common shares to the greatest extent possible. The $15 positive investment adjustment that is reallocated to common shares may be reallocated entirely to CS8, increasing its basis from $125 to $140. However, there may be other reasonable reallocations.

(D) *Summary of the reallocation of adjustments.* The adjustments made under this paragraph (b) are:

	Preferred		Common							
	PS1 (M)	PS2 (P)	CS1 (P)	CS2 (P)	CS3 (P)	CS4 (P)	CS5 (P)	CS6 (P)	CS7 (P)	CS8 (P)
Adjusted basis before redetermination	1350	1090	925	610	450	300	275	150	115	0
Removing positive adjustments from transferred loss shares	.....	.....	.....	−25						
Reallocating negative adjustments	−250	.....	.....	−310	.....	+80	+105	+125	+125	+125
Applying positive adjustments removed from transferred loss shares	.....	+10	.....	.....	.....	.....	.....	.....	.....	+15
Basis after redetermination	1100	1100	925	275	450	380	380	275	240	140
Value	1100	1100	275	275	275	275	275	275	275	275
Gain/(loss)	0	0	(650)	0	(175)	(105)	(105)	0	35	135

(iii) *Application of paragraphs (c) and (d) of this section.* Because M's sale of PS1 and P's sale of CS2 are not transfers of loss shares after the application of this paragraph (b), paragraphs (c) and (d) of this section do not apply.

(iv) *Higher-tier effects.* The $250 reduction in the basis of PS1 under this paragraph (b) is a noncapital, nondeductible expense under § 1.1502–32(b)(3)(iii)(B) that will be included in the year 3 investment adjustment to be applied to P's basis in its M stock.

(c) *Stock basis reduction to prevent noneconomic loss*—(1) *In general.* The rules of this paragraph (c) reduce M's

basis in a transferred share of S stock to prevent noneconomic stock loss and thus promote the clear reflection of the group's income. These rules limit the reduction to M's basis in the S share to the amount of net unrealized appreciation reflected in the share's basis as of the transfer (the disconformity amount). These rules also limit the reduction to M's basis in the S share to the portion of the share's basis that is attributable to investment adjustments made pursuant to the consolidated return regulations.

(2) *Basis reduction rule.* This paragraph (c) applies if M transfers a share of S stock and, after taking into account the effects of all applicable rules of law, including any adjustments under paragraph (b) of this section, the share is a loss share. Under this paragraph (c), M's basis in the share is reduced, but not below value, by the lesser of—

(i) The share's net positive adjustment (as defined in paragraph (c)(3) of this section); and

(ii) The share's disconformity amount (as defined in paragraph (c)(4) of this section).

(3) *Net positive adjustment.* A share's *net positive adjustment* is the greater of—

(i) Zero; and

(ii) The sum of all investment adjustments reflected in the basis of the share. The term *investment adjustment* has the same meaning as in paragraph (b)(1)(iii) of this section, except that it includes all adjustments specially allocated under § 1.1502–32(c)(1)(ii).

(4) *Disconformity amount.* A share's *disconformity amount* is the excess, if any, of—

(i) M's basis in the share; over

(ii) The share's allocable portion of S's net inside attribute amount (as defined in paragraph (c)(5) of this section).

(5) *Net inside attribute amount.* S's *net inside attribute amount* is determined as of the transfer, taking into account all applicable rules of law (even if the adjustments required by such rules are not deemed effective until after the transfer, such as certain adjustments required under sections 108 and 1017 and § 1.1502–28). S's net inside attribute amount is the sum of S's net operating and capital loss carryovers, deferred deductions, money, and basis in assets other than money, reduced by the amount of S's liabilities. For this purpose, S's basis in any share of lower-tier subsidiary stock is generally S's basis in that share, adjusted to reflect any gain or loss recognized in the transaction with respect to the share and any other related or resulting adjustments to the basis of the share. However, see paragraph (c)(6) of this section for special rules regarding the computation of S's net inside attribute amount for purposes of this paragraph (c) if S holds stock of a subsidiary that is not transferred in the transaction. See paragraph (f) of this section for definitions of ''allocable portion,'' ''deferred deduction,'' ''liability,'' ''loss carryover,'' and other relevant terms.

(6) *Determination of S's net inside attribute amount if S owns stock of a lower-tier subsidiary*—(i) *Overview.* If a loss share of S stock is transferred when S holds a share of stock of another subsidiary (S1) and the S1 share is not transferred in the same transaction, S's net inside attribute amount is determined by treating S's basis in its S1 share as tentatively reduced under this paragraph (c)(6). The purpose of this rule is to reduce the extent to which S1's investment adjustments increase noneconomic loss on S stock (as a result of S1's recognition of items that are indirectly reflected in a member's basis in a share of S stock).

(ii) *General rule for nontransferred shares of lower-tier subsidiary stock.* For purposes of determining the disconformity amount of a share of S stock, S's basis in a nontransferred share of S1 stock is treated as reduced by the share's tentative reduction amount. The tentative reduction amount is the lesser of the S1 share's net positive adjustment and the S1 share's disconformity amount.

(iii) *Multiple tiers of nontransferred shares.* If S directly or indirectly owns nontransferred shares of stock of subsidiaries in multiple tiers, then, subject to the limitations in paragraph (c)(6)(iv) of this section (regarding nontransferred shares that are lower-tier to transferred shares), the rules of this paragraph (c)(6) first apply to determine the tentatively reduced basis of

stock of the subsidiary at the lowest tier. These rules then apply to determine the tentatively reduced basis of nontransferred shares of stock of subsidiaries successively at each next higher tier that is lower-tier to S. The tentative reductions at each tier are treated as noncapital, nondeductible expenses that tier up under the principles of § 1.1502–32, and, as such, result in a tentative reduction of basis and any net positive adjustment of subsidiary shares that are lower-tier to S.

(iv) *Nonapplicability of tentative basis reduction rule to transferred shares.* The tentative basis reduction rule in this paragraph (c)(6) does not apply to any share of stock of a lower-tier subsidiary (S1) that is transferred in the same transaction in which the S share is transferred. Further, for purposes of determining the S share's disconformity amount, the tentative basis reduction rule in this paragraph (c)(6) only applies with respect to stock of a lower-tier subsidiary if such stock is lower-tier to a nontransferred S1 share. The purpose of this rule is to prevent tentative adjustments to the bases of lower-tier shares if this paragraph (c) has already applied with respect to the shares, without regard to whether such application resulted in the reduction of the basis of any share.

(v) *Example.* The rules of this paragraph (c)(6) are illustrated by the following example:

Example. (i) *Facts.* M owns the sole outstanding share of S stock, S owns the sole outstanding share of S1 stock, S1 owns all five outstanding shares of S2 stock (the bases of which are equal), and S2 owns the sole outstanding share of S3 stock. The basis of each of the shares reflects its allocable portion of a $5 positive investment adjustment attributable to income recognized by S3. The basis of the S share exceeds its value by $10 and the basis of the S1 share exceeds its value by $5. The basis of each S2 share is $1 less than its value. In one transaction, M sells its S share to X, S1 issues new shares in an amount that prevents S and S1 from being members of the same group, and S1 sells one of its S2 shares to an unrelated individual. S1, S2, and S3 elect to file a consolidated return following the transaction.

(ii) *General applicability of section.* As a result of the transaction, there is a transfer of the S share and the S2 share that was sold (because both shares were sold to nonmembers) and of the S1 share (because S and S1 cease to be members of the same group as a result of the stock issuance). The transfer of the S2 share is not a transfer of a loss share, and so this section does not apply to that transfer. The transfers of the S and S1 shares are transfers of loss shares, and so this section applies to those transfers. The S3 share and the four retained S2 shares are not transferred in the transaction. Under paragraph (a)(3)(ii)(A) of this section, this section applies first to the transfer of the S1 share because it is the lowest-tier transferred loss share.

(iii) *Application of paragraph (b) of this section and this paragraph (c) to transfer of S1 stock.* First, the $1 gain recognized on the transfer of the S2 share tiers up to adjust the basis of each upper-tier share. The transferred S1 share is still a loss share (by $4) and is therefore subject to this section. Although the transfer is subject to paragraph (b) of this section, there is no basis redetermination under paragraph (b) of this section because there is only one share of S1 stock outstanding (and so there can be no disparity among members' bases in common shares and there are no outstanding preferred shares with respect to which there can be unrecognized gain or loss). See paragraph (b)(1)(ii)(A) of this section. Therefore, after the application of paragraph (b) of this section, the S1 share is still a loss share and, as such, subject to this paragraph (c). In determining the amount of any basis reduction under this paragraph (c), the disconformity amount of the S1 share is computed by comparing S's basis in its S1 share to S1's net inside attribute amount (because there is only one S1 share outstanding, the entire amount is allocable to that share). In determining S1's net inside attribute amount, the tentative reduction rule in this paragraph (c)(6) applies to nontransferred lower-tier shares (provided they are lower-tier to nontransferred shares). Thus, the rule applies to S1's four retained shares of S2 stock and to S2's share of S3 stock. The tentative reduction begins at the lowest level (S2's share of S3 stock) and any tentative reduction amount tiers up as a noncapital, nondeductible expense under the principles of § 1.1502–32, tentatively reducing the bases of any upper tier nontransferred shares that are lower-tier to the transferred loss share (the S1 share). Accordingly, each of S1's nontransferred share of S2 stock is tentatively reduced by its portion of the tentative reduction to S2's share of S3 stock. S1 then applies the tentative reduction rule to its four nontransferred S2 shares. S1's net inside attribute amount is the sum of its basis in each of its nontransferred S2 shares, as tentatively reduced under this paragraph (c)(6) and S1's actual basis in the transferred S2 share, increased to reflect the gain recognized on the sale of that share. After the application of this paragraph (c) to the transfer of the S1 share,

paragraph (b) of this section applies to M's transfer of the S share.

(iv) *Application of section to transfer of S stock*. Because the S share is still a loss share after applying paragraph (b) of this section and this paragraph (c) to the transfer of the S1 stock, this section applies to M's transfer of the S share. Although paragraph (b) of this section applies to the transfer, there is no basis redetermination under paragraph (b) of this section because there is only one share of S stock outstanding (and so there can be no disparity among members' bases in common shares and there are no outstanding preferred shares with respect to which there can be unrecognized gain or loss). See paragraph (b)(1)(ii)(A) of this section. Therefore, after the application of paragraph (b) of this section, the share is still a loss share and, as such, subject to this paragraph (c). In determining the disconformity amount of the S share, S's net inside attribute amount is determined using S's actual basis in the transferred S1 stock (after any reduction under this paragraph (c)), because the tentative reduction rule in this paragraph (c)(6) does not apply to shares that are transferred in the transaction. All other shares are lower-tier to the transferred S1 share and are therefore also not subject to tentative reduction for purposes of determining the disconformity amount of the S share. After the application of this paragraph (c) to the transfer of the S share, paragraph (d) of this section applies with respect to M's transfer of the S share. After the application of paragraph (d) of this section with respect to the transfer of the S share, if the S1 share is still a loss share, paragraph (d) of this section applies with respect to S's transfer of the S1 share.

(7) *Netting of gains and losses taken into account*—(i) *General rule*. Solely for purposes of computing the basis reduction required under this paragraph (c), the basis of each transferred loss share of S stock is treated as reduced proportionately (as to loss) by the amount of income or gain taken into account by members with respect to transferred shares of S stock, provided that—

(A) The shares are transferred in one transaction; and

(B) The gain is taken into account as of the transaction.

(ii) *Example*. The netting rule of this paragraph (c)(7) is illustrated by the following example:

Example. Disposition of gain and loss shares. (i) *Facts*. M owns the only three outstanding shares of S stock. Share A has a basis of $54, Share B has a basis of $100, and Share C has a basis of $80. In the same transaction, M sells all three S shares to X for $60 each. M realizes a gain of $6 on Share A, a loss of $40 on Share B, and a loss of $20 on Share C. M's sales of Share B and Share C are transfers of loss shares and therefore subject to this section. M's sale is a transfer of all of the shares of S stock held by members to one or more nonmembers in one fully taxable transaction and, therefore, basis is not redetermined under paragraph (b) of this section. See paragraph (b)(1)(ii)(B) of this section. The transfer is then subject to this paragraph (c). However, for this purpose, M treats its bases in Share B and Share C as reduced by the $6 gain taken into account on Share A. The gain is allocated to Share B and Share C proportionately based on the amount of loss in each share. Thus, $4 of gain ($40/$60 × $6) is treated as allocated to Share B and $2 of gain ($20/$60 × $6) is treated as allocated to Share C. Accordingly, M computes the basis reduction required under this paragraph (c) by treating its basis in Share B as $96 ($100 less $4) and its basis in Share C as $78 ($80 less $2). If, after the application of this paragraph (c), the sales of Share B and Share C are still transfers of loss shares, then the transfers are subject to paragraph (d) of this section. (Although the bases of Share B and Share C are not actually reduced by any portion of the gain, paragraph (d)(3)(i)(A) of this section applies netting principles to limit adjustments under paragraph (d) of this section.)

(ii) *Disposition of stock with deferred gain*. The facts are the same as in paragraph (i) of this *Example*, except that M sells the gain share to another member. Under § 1.1502–13, M's gain recognized on Share A is not taken into account in the taxable year of the transfer and therefore cannot be treated as reducing M's loss recognized on Share B and Share C for purposes of this paragraph (c). The applicability of this section to the transfer of Share A is determined as of the time that the intercompany item (the gain on M's sale to the other member) is taken into account; see paragraph (e)(3) of this section. However, if Share B (instead of Share A) were sold to a member, the entire gain on Share A would be treated as reducing the loss on Share C for purposes of applying this paragraph (c); see paragraph (e)(3) of this section.

(8) *Examples*. The application of this paragraph (c) is illustrated by the following examples.

Example 1. Appreciation reflected in stock basis at acquisition. (i) *Appreciation recognized as gain*. (A) *Facts*. On January 1, year 1, M purchases the sole outstanding share of S stock for $100. At that time, S owns two assets, Asset 1 with a basis of $0 and a value of $40, and Asset 2 with a basis and value of $60. In year 1, S sells Asset 1 for $40, recognizing a $40 gain. On December 31, year 1, M sells its S share for $100. After taking into account

the effects of all applicable rules of law, M's basis in the S share is $140 (M's original $100 basis increased under §1.1502–32 by $40, the share's allocable portion of the gain recognized on the sale of Asset 1). M's sale of the S share is a transfer of a loss share and therefore subject to this section.

(B) *Application of paragraph (b) of this section*. Although the transfer is subject to this section, there is no basis redetermination under paragraph (b) of this section because there is only one share of S stock outstanding (and so there can be no disparity among members' bases in common shares and there are no outstanding preferred shares with respect to which there can be unrecognized gain or loss). See paragraph (b)(1)(ii)(A) of this section. Therefore, after the application of paragraph (b) of this section, the share is still a loss share and, as such, subject to this paragraph (c).

(C) *Basis reduction under this paragraph (c)*. Under this paragraph (c), M's basis in the S share, $140, is reduced, but not below value, $100, by the lesser of the share's net positive adjustment and disconformity amount. The share's net positive adjustment is the greater of zero and the sum of all investment adjustments (as defined in paragraph (b)(1)(iii) of this section) applied to the basis of the share. The only investment adjustment applied to the basis of the share is the $40 adjustment attributable to the gain recognized on the sale of Asset 1. Thus, the share's net positive adjustment is $40. The share's disconformity amount is the excess, if any, of its basis, $140, over its allocable portion of S's net inside attribute amount. S's net inside attribute amount is the sum of S's money ($40 from the sale of Asset 1) and S's basis in Asset 2, $60, or $100. The share is the only outstanding S share and so its allocable portion of the $100 net inside attribute amount is the entire $100. Thus, the share's disconformity amount is $40, the excess of $140 over $100. The lesser of the net positive adjustment, $40, and the share's disconformity amount, $40, is $40. Accordingly, immediately before the application of paragraph (d) of this section, M's basis in the share is reduced by $40, from $140 to $100.

(D) *Application of paragraph (d) of this section*. Because M's sale of the S share is not a transfer of a loss share after the application of this paragraph (c), paragraph (d) of this section does not apply to the transfer.

(ii) *Appreciation recognized as income earned in the consumption of built-in gain*. The facts are the same as in paragraph (i)(A) of this *Example 1*, except that, instead of selling Asset 1, the value of Asset 1 is consumed in the production of $40 of income in year 1 (reducing the value of Asset 1 to $0). Because the net positive adjustment includes items of income as well as items of gain, the results are the same as those described in paragraph (i) of this *Example 1*.

(iii) *Post-acquisition appreciation eliminates stock loss*. The facts are the same as in paragraph (i)(A) of this *Example 1* except that, in addition, the value of Asset 2 increases to $100 before the stock is sold. As a result, M sells the S share for $140. Because M's sale of the S share is not a transfer of a loss share, this section does not apply to the transfer, notwithstanding that P's basis in the S share was increased by the gain recognized on Asset 1.

(iv) *Distributions*. (A) *Facts*. The facts are the same as in paragraph (i)(A) of this *Example 1* except that, in addition, S declares and makes a $10 dividend distribution before the end of year 1. As a result, the value of the share decreases and M sells the share for $90. After taking into account the effects of all applicable rules of law, M's basis in the S share is $130 (M's original $100 basis increased under §1.1502–32 by $30, the $10 distribution on the share reduced by the share's allocable portion of the $40 gain recognized on the sale of Asset 1). M's sale of the S share is a transfer of a loss share and therefore subject to this section.

(B) *Application of paragraph (b) of this section*. Although the transfer is subject to this section, there is no basis redetermination under paragraph (b) of this section for the reasons set forth in paragraph (i)(B) of this *Example 1*. Therefore, after the application of paragraph (b) of this section, the share is still a loss share and, as such, subject to this paragraph (c).

(C) *Basis reduction under this paragraph (c)*. Under this paragraph (c), M's basis in the S share, $130, is reduced, but not below value, $90, by the lesser of the share's net positive adjustment and disconformity amount. The share's net positive adjustment is $40 (the sum of all investment adjustments (as defined in paragraph (b)(1)(iii) of this section) applied to the basis of the share). The share's disconformity amount is the excess of its basis, $130, over its allocable portion of S's net inside attribute amount. S's net inside attribute amount is $90, the sum of S's money ($30, the $40 sale proceeds less the $10 distribution) and S's basis in Asset 2, $60. The share is the only outstanding S share and so its allocable portion of the $90 net inside attribute amount is the entire $90. The lesser of the share's net positive adjustment, $40, and its disconformity amount, $40, is $40. Accordingly, immediately before the application of paragraph (d) of this section, the basis in the share is reduced by $40, from $130 to $90.

(D) *Application of paragraph (d) of this section*. Because M's sale of the S share is not a transfer of a loss share after the application of this paragraph (c), paragraph (d) of this section does not apply to the transfer.

Example 2. Loss of appreciation reflected in basis. (i) *Facts*. On January 1, year 1, M purchases the sole outstanding share of S stock

for $100. At that time, S owns two assets, Asset 1 with a basis of $0 and a value of $40, and Asset 2 with a basis and value of $60. The value of Asset 1 declines to $0 and M sells its S share for $60. After taking into account the effects of all applicable rules of law, M's basis in the S share is $100. M's sale of the S share is a transfer of a loss share and therefore subject to this section.

(ii) *Application of paragraph (b) of this section*. Although the transfer is subject to this section, there is no basis redetermination under paragraph (b) of this section because there is only one share of S stock outstanding (and so there can be no disparity among members' bases in common shares and there are no outstanding preferred shares with respect to which there can be unrecognized gain or loss). See paragraph (b)(1)(ii)(A) of this section. Therefore, after the application of paragraph (b) of this section, the share is still a loss share and, as such, subject to this paragraph (c).

(iii) *Basis reduction under this paragraph (c)*. Under this paragraph (c), M's $100 basis in the S share is reduced, but not below its $60 value by the lesser of the share's net positive adjustment and disconformity amount. There were no investment adjustments applied to M's basis in the share and so the share's net positive adjustment is $0. Thus, although the share's disconformity amount is $40 (the excess of M's $100 basis in the share over the share's $60 allocable portion of S's net inside attribute amount), no basis reduction is required under this paragraph (c).

(iv) *Application of paragraph (d) of this section*. After the application of this paragraph (c), M's sale of the S share is still a transfer of a loss share, and, accordingly, subject to paragraph (d) of this section. No adjustment is required under paragraph (d) of this section because there is no aggregate inside loss. See paragraph (d)(3)(iii) of this section.

Example 3. Items accruing after S becomes a member. (i) *Recognition of loss accruing after S becomes a member*. (A) *Facts*. On January 1, year 1, M purchases the sole outstanding share of S stock for $100. At that time, S owns two assets, Asset 1, with a basis of $0 and a value of $40, and Asset 2, with a basis and value of $60. In year 1, S sells Asset 1 for $40, recognizing a $40 gain. Also in year 1, the value of Asset 2 declines and S sells Asset 2 for $20, recognizing a $40 loss that is absorbed by the group. On December 31, year 1, M sells its S share for $60. After taking into account the effects of all applicable rules of law, M's basis in the S share is $100 (M's original $100 basis, unadjusted under §1.1502–32 because the $40 gain recognized on the sale of Asset 1 and the $40 loss on the sale of Asset 2 net, resulting in an adjustment of $0). M's sale of the S share is a transfer of a loss share and therefore subject to this section.

(B) *Application of paragraph (b) of this section*. Although the transfer is subject to this section, there is no basis redetermination under paragraph (b) of this section because there is only one share of S stock outstanding (and so there can be no disparity among members' bases in common shares and there are no outstanding preferred shares with respect to which there can be unrecognized gain or loss). See paragraph (b)(1)(ii)(A) of this section. Therefore, after the application of paragraph (b) of this section, the share is still a loss share and, as such, subject to this paragraph (c).

(C) *Basis reduction under this paragraph (c)*. Under this paragraph (c), M's basis in the S share is reduced, but not below the share's $60 value, by the lesser of the share's net positive adjustment and disconformity amount. The share's net positive adjustment is $0. Thus, although the share has a disconformity amount of $40 (the excess of M's basis in the share, $100, over the share's allocable portion of S's net inside attribute amount, $60), no basis reduction is required under this paragraph (c).

(D) *Application of paragraph (d) of this section*. After the application of this paragraph (c), M's sale of the S share is still a transfer of a loss share, and, accordingly, subject to paragraph (d) of this section. No adjustment is required under paragraph (d) of this section because there is no aggregate inside loss. See paragraph (d)(3)(iii) of this section.

(ii) *Recognition of gain accruing after S becomes a member*. (A) *Facts*. The facts are the same as in paragraph (i)(A) of this *Example 3*, except that M does not sell the S share and S does not sell either asset in year 1. In addition, in year 2, the value of Asset 1 declines to $0, the value of Asset 2 returns to $60, and S creates Asset 3 (with a basis of $0). In year 3, S sells Asset 3 for $40, recognizing a $40 gain. On December 31, year 3, M sells its S share for $100. After taking into account the effects of all applicable rules of law, M's basis in the S share is $140 (M's original $100 basis increased under §1.1502–32 by $40 (the share's allocable portion of the gain recognized on the sale of Asset 3 in year 3)). M's sale of the S share is a transfer of a loss share and therefore subject to this section.

(B) *Application of paragraph (b) of this section*. Although the transfer is subject to this section, there is no basis redetermination under paragraph (b) of this section for the reasons set forth in paragraph (i)(B) of this *Example 3*. Therefore, after the application of paragraph (b) of this section, the share is still a loss share and, as such, subject to this paragraph (c).

(C) *Basis reduction under this paragraph (c)*. Under this paragraph (c), M's basis in the S share, $140, is reduced, but not below value, $100, by the lesser of the share's net positive adjustment and disconformity amount. The share's net positive adjustment is $40 (the

year 3 investment adjustment). The share's disconformity amount is the excess of its basis, $140, over its allocable portion of S's net inside attribute amount. S's net inside attribute amount is $100, the sum of S's money ($40 from the sale of Asset 3) and its basis in its assets ($60 (the sum of Asset 1's basis of $0 and Asset 2's basis of $60)). S's $100 net inside attribute amount is allocable entirely to the sole outstanding S share. Thus, the share's disconformity amount is the excess of $140 over $100, or $40. The lesser of the share's net positive adjustment, $40, and its disconformity amount, $40, is $40. Accordingly, the basis in the share is reduced by $40, from $140 to $100.

(D) *Application of paragraph (d) of this section.* Because M's sale of the S share is not a transfer of a loss share after the application of this paragraph (c), paragraph (d) of this section does not apply to the transfer.

(iii) *Recognition of income earned after S becomes a member.* The facts are the same as in paragraph (ii)(A) of this *Example 3*, except that instead of creating Asset 3, S earns $40 of income from services provided in year 3. Because the net positive adjustment includes items of income as well as items of gain, the results are the same as those described in paragraph (ii) of this *Example 3*.

Example 4. Computing the disconformity amount. (i) *Unrecognized loss reflected in stock basis.* (A) *Facts.* M owns the sole outstanding share of S stock with a basis of $100. S owns two assets, Asset 1 with a basis of $20 and a value of $60, and Asset 2 with a basis of $60 and a value of $40. In year 1, S sells Asset 1 for $60, recognizing a $40 gain. On December 31, year 1, M sells the S share for $100. After taking into account the effects of all applicable rules of law, M's basis in the S share is $140 (M's original $100 basis increased under § 1.1502–32 by $40, the share's allocable portion of the gain recognized on the sale of Asset 1). M's sale of the S share is a transfer of a loss share and therefore subject to this section.

(B) *Application of paragraph (b) of this section.* Although the transfer is subject to this section, there is no basis redetermination under paragraph (b) of this section because there is only one share of S stock outstanding (and so there can be no disparity among members' bases in common shares and there are no outstanding preferred shares with respect to which there can be unrecognized gain or loss). See paragraph (b)(1)(ii)(A) of this section. Therefore, after the application of paragraph (b) of this section, the share is still a loss share and, as such, subject to this paragraph (c).

(C) *Basis reduction under this paragraph (c).* Under this paragraph (c), M's basis in the S share, $140, is reduced, but not below the share's $100 value, by the lesser of the share's net positive adjustment and disconformity amount. The share's net positive adjustment is $40 (the year 1 investment adjustment). The share's disconformity amount is the excess of its basis, $140, over its allocable portion of S's net inside attribute amount. S's net inside attribute amount is $120, the sum of S's money ($60 from the sale of Asset 1) and S's basis in Asset 2, $60. S's net inside attribute amount is allocable entirely to the sole outstanding S share. Thus, the share's disconformity amount is $20, the excess of $140 over $120. The lesser of the share's net positive adjustment, $40, and its disconformity amount, $20, is $20. Accordingly, the basis in the share is reduced by $20, from $140 to $120.

(D) *Application of paragraph (d) of this section.* After the application of this paragraph (c), M's sale of the S share is still a transfer of a loss share, and, accordingly, S's attributes (to the extent of the $20 duplicated loss) are subject to reduction under paragraph (d) of this section.

(ii) *Loss carryover.* The facts are the same as in paragraph (i)(A) of this *Example 4*, except that Asset 2 has a basis of $0 (rather than $60) and S has a $60 loss carryover (as defined in paragraph (f)(6) of this section). The analysis is the same as paragraph (i) of this *Example 4*. Furthermore, the analysis of the application of this paragraph (c) would be the same if the $60 loss carryover were subject to a section 382 limitation from a prior ownership change, or if, instead, the $60 loss carryover were subject to the limitation in § 1.1502–21(c) on losses carried from separate return limitation years.

(iii) *Liabilities.* The facts are the same as in paragraph (i)(A) of this *Example 4*, except that S borrows $100 before M sells the S share. S's net inside attribute amount remains $120, computed as the sum of S's money ($160, $60 from the sale of Asset 1 plus the $100 borrowed) and S's basis in Asset 2, $60, less its liabilities, $100. Thus, the S share's disconformity amount remains the excess of $140 over $120, or $20. The results are the same as in paragraph (i) of this *Example 4*.

Example 5. Computing the allocable portion of the net inside attribute amount. (i) *Facts.* On January 1, year 1, M owns all five outstanding shares of S stock with a basis of $20 per share. S owns Asset with a basis of $0. In year 1, S sells Asset for $100, recognizing a $100 gain. On December 31, year 1, M sells one of the S shares, Share 1, for $20. After taking into account the effects of all applicable rules of law, M's basis in Share 1 is $40 (M's original $20 basis increased under § 1.1502–32 by $20 (the share's allocable portion of the gain recognized on the sale of Asset)). M's sale of Share 1 is a transfer of a loss share and therefore subject to this section.

(ii) *Application of paragraph (b) of this section.* Although the transfer is subject to this section, basis is not redetermined under paragraph (b) of this section because there is

no disparity among M's bases in shares of S common stock and there are no shares of S preferred stock outstanding (so there can be no unrecognized gain or loss with respect to preferred shares). See paragraph (b)(1)(ii)(A) of this section. After the application of paragraph (b) of this section, M's sale of Share 1 is still a transfer of a loss share and therefore subject to this paragraph (c).

(iii) *Basis reduction under this paragraph (c).* Under this paragraph (c), M's $40 basis in Share 1 is reduced, but not below its $20 value by the lesser of the share's net positive adjustment and disconformity amount. Share 1's net positive adjustment is $20 (the year 1 investment adjustment). Share 1's disconformity amount is the excess of its $40 basis over its allocable portion of S's net inside attribute amount. S's net inside attribute amount is equal to the amount of S's money ($100 from the sale of the asset). Share 1's allocable portion of S's $100 net inside attribute amount is $20 (1/5 × $100). Thus, Share 1's disconformity amount is the excess of $40 over $20, or $20. The lesser of the share's $20 net positive adjustment and its $20 disconformity amount is $20. Accordingly, the basis in the share is reduced by $20, from $40 to $20.

(iv) *Application of paragraph (d) of this section.* Because M's sale of Share 1 is not a transfer of a loss share after the application of this paragraph (c), paragraph (d) of this section does not apply to the transfer.

Example 6. Liabilities. (i) *In general.* (A) *Facts.* On January 1, year 1, M purchases the sole outstanding share of S stock for $100. At that time, S owns Asset, with a basis of $0 and value of $100, and $100 cash. S also has a $100 liability. In year 1, S declares and makes a $60 dividend distribution to M and recognizes $20 of income. The value of Asset declines to $60 and, on December 31, year 1, M sells the S share for $20. After taking into account the effects of all applicable rules of law, M's basis in the S share is $60 (M's original $100 basis decreased under § 1.1502–32 by $40 (the net of the $60 distribution and the $20 income recognized)). M's sale of the S share is a transfer of a loss share and therefore subject to this section.

(B) *Application of paragraph (b) of this section.* Although the transfer is subject to this section, there is no basis redetermination under paragraph (b) of this section because there is only one share of S stock outstanding (and so there can be no disparity among members' bases in common shares and there are no outstanding preferred shares with respect to which there can be unrecognized gain or loss). See paragraph (b)(1)(ii)(A) of this section. Therefore, after the application of paragraph (b) of this section, the share is still a loss share and, as such, subject to this paragraph (c).

(C) *Basis reduction under this paragraph (c).* Under this paragraph (c), M's basis in the S share, $60, is reduced, but not below value, $20, by the lesser of the share's net positive adjustment and disconformity amount. The share's net positive adjustment is $20 (the year 1 investment adjustment, as defined in paragraph (b)(1)(iii) of this section). The share's disconformity amount is the excess of its basis, $60, over its allocable portion of S's net inside attribute amount. S's net inside attribute amount is negative $40, computed as the sum of S's money ($60 ($100 less the $60 distribution plus the $20 income recognized)) and S's basis in Asset, $0, less S's liability, $100. S's net inside attribute amount is allocable entirely to the sole outstanding S share. Thus, the share's disconformity amount is the excess of $60 over negative $40, or $100. The lesser of the share's net positive adjustment, $20, and its disconformity amount, $100, is $20. Accordingly, the basis in the share is reduced by $20, from $60 to $40.

(D) *Application of paragraph (d) of this section.* After the application of this paragraph (c), the S share is still a loss share and, accordingly, S's attributes are subject to reduction under paragraph (d) of this section. No adjustment is required under paragraph (d) of this section, however, because there is no aggregate inside loss. See paragraph (d)(3)(iii) of this section.

(ii) *Excluded cancellation of indebtedness income—insufficient attributes available for reduction under sections 108 and 1017, and § 1.1502–28.* (A) *Facts.* The facts are the same as in paragraph (i)(A) of this *Example 6*, except that M does not sell the S share. Instead, in year 4, Asset is destroyed in a fire and S spends its $60 on deductible expenses that are not absorbed by the group. S's loss becomes part of the consolidated net operating loss (CNOL). In year 5, S becomes insolvent and S's debt is discharged. Because of S's insolvency, S's discharge of indebtedness income is excluded under section 108 and, as a result, S's attributes are subject to reduction under sections 108 and 1017, and § 1.1502–28. S's only attribute is the portion of the CNOL attributable to S, $60, and it is reduced to $0. There are no other consolidated attributes. In year 5, the S stock (which is treated as a capital asset) becomes worthless under section 165, taking into account § 1.1502–80(c). After taking into account the effects of all applicable rules of law, M's basis in the S share is $60 (M's original $100 basis decreased under § 1.1502–32 by the year 1 investment adjustment of $40 (the net of the $60 distribution and the $20 income recognized). The investment adjustment for year 5 is $0 (the net of the $60 tax exempt income from the excluded COD applied to reduce attributes and the $60 noncapital, nondeductible expense from the reduction of S's portion of the CNOL). Under paragraph (f)(10)(i)(D) of this section, a share is transferred on the last day of the taxable year

during which it becomes worthless under section 165 if the share is treated as a capital asset, or the date the share becomes worthless if the share is not treated as a capital asset, taking into account §1.1502–80(c). Accordingly, M transfers the loss share of S stock on December 31, year 5, and the transfer is therefore subject to this section.

(B) *Application of paragraph (b) of this section.* Although the transfer is subject to this section, there is no basis redetermination under paragraph (b) of this section for the reasons set forth in paragraph (i)(B) of this *Example 6*. Therefore, after the application of paragraph (b) of this section, the share is still a loss share and, as such, subject to this paragraph (c).

(C) *Basis reduction under this paragraph (c).* Under this paragraph (c), M's basis in its S share, $60, is reduced, but not below value, $0, by the lesser of the share's net positive adjustment and disconformity amount. The share's net positive adjustment is $20 (the year 1 investment adjustment, as defined in paragraph (b)(1)(iii) of this section). The share's disconformity amount is the excess of its basis, $60, over its allocable portion of S's net inside attribute amount. S's net inside attribute amount is $0. (The effects of the attribute reduction required under sections 108 and 1017 and §1.1502–28 are taken into account in applying this section; therefore, for purposes of this section, S's portion of the CNOL is treated as eliminated under section 108 and §1.1502–28.) S's net inside attribute amount is allocable entirely to the sole outstanding S share. Thus, the share's disconformity amount is the excess of $60 over $0, or $60. The lesser of the share's net positive adjustment, $20, and its disconformity amount, $60, is $20. Accordingly, the basis in the share is reduced by $20, from $60 to $40, immediately before the transfer.

(D) *Application of paragraph (d) of this section.* After the application of this paragraph (c), the S share is still a loss share, and, accordingly, S's attributes are subject to reduction under paragraph (d) of this section. No adjustment is required under paragraph (d) of this section, however, because there is no aggregate inside loss. See paragraph (d)(3)(iii) of this section.

(iii) *Excluded cancellation of indebtedness income—full attribute reduction under sections 108 and 1017, and §1.1502–28 (using attributes attributable to another member).* (A) *Facts.* The facts are the same as in paragraph (ii)(A) of this *Example 6* except that M loses the $60 distributed in year 1 and the group does not absorb the loss. Thus, as of December 31, year 5, the CNOL is $120, attributable $60 to S and $60 to P. As a result, under §1.1502–28(a)(4), after the portion of the CNOL attributable to S is reduced to $0, the remaining $40 of excluded COD applies to the portion of the CNOL attributable to P, reducing it from $60 to $20. After taking into account the effects of all applicable rules of law, M's basis in the S share at the end of year 5 is $100 (M's original $100 basis decreased under §1.1502–32 by $40 at the end of the year 1 and then increased under §1.1502–32 by $40 at end of the year 5 (the net of the $100 tax exempt income from the excluded COD applied to reduce attributes and the $60 noncapital, nondeductible expense from the reduction of S's portion of the CNOL)). Under paragraph (f)(10)(i)(D) of this section, a share is transferred on the last day of the taxable year during which it becomes worthless under section 165 if the share is treated as a capital asset, or the date the share becomes worthless if the share is not treated as a capital asset, taking into account §1.1502–80(c). Accordingly, M transfers the loss share of S stock on December 31, year 5, and the transfer is therefore subject to this section.

(B) *Application of paragraph (b) of this section.* Although the transfer is subject to this section, there is no basis redetermination under paragraph (b) of this section for the reasons set forth in paragraph (i)(B) of this *Example 6*. Therefore, after the application of paragraph (b) of this section, the share is still a loss share and, as such, subject to this paragraph (c).

(C) *Basis reduction under this paragraph (c).* Under this paragraph (c), M's basis in the S share, $100, is reduced, but not below value, $0, by the lesser of the share's net positive adjustment and disconformity amount. The share's net positive adjustment is $60 (the sum of the year 1 investment adjustment, as defined in paragraph (b)(1)(iii) of this section, $20, and the year 5 investment adjustment, $40). The share's disconformity amount is the excess of its basis, $100, over its allocable portion of S's net inside attribute amount. S's net inside attribute amount is $0 (taking into account the effects of the attribute reduction required under sections 108 and 1017 and §1.1502–28). S's net inside attribute amount is allocable entirely to the sole outstanding S share. The share's disconformity amount is therefore $100. The lesser of the share's net positive adjustment, $60, and its disconformity amount, $100, is $60. Accordingly, M's basis in the share is reduced by $60, from $100 to $40, immediately before the transfer.

(D) *Application of paragraph (d) of this section.* After the application of this paragraph (c), the S share is still a loss share, and, accordingly, S's attributes are subject to reduction under paragraph (d) of this section. No adjustment is required under paragraph (d) of this section, however, because there is no aggregate inside loss. See paragraph (d)(3)(iii) of this section.

Example 7. Lower-tier subsidiary (no transfer of lower-tier stock). (i) *Facts.* M owns the sole outstanding share of S stock with a basis of $160. S owns two assets, Asset 1 with a basis and value of $100, and the sole outstanding

share of S1 stock with a basis of $60. S1 owns one asset, Asset 2, with a basis of $20 and value of $60. In year 1, S1 sells Asset 2 to X for $60, recognizing a $40 gain. On December 31, year 1, M sells its S share to Y, a member of another consolidated group, for $160. After taking into account the effects of all applicable rules of law, M's basis in the S share is $200 (M's original $160 basis increased under § 1.1502–32 by $40 (to reflect the tier-up of the adjustment to S's basis in the S1 stock for the gain recognized on S1's sale of Asset 2)). M's sale of the S share is a transfer of a loss share and therefore subject to this section. (S does not transfer the S1 share because S and S1 are members of the same group following the transfer. See paragraph (f)(10) of this section.)

(ii) *Application of paragraph (b) of this section.* Although the transfer is subject to this section, there is no basis redetermination under paragraph (b) of this section because there is only one share of S stock outstanding (and so there can be no disparity among members' bases in common shares and there are no outstanding preferred shares with respect to which there can be unrecognized gain or loss). See paragraph (b)(1)(ii)(A) of this section. Therefore, after the application of paragraph (b) of this section, the share is still a loss share and, as such, subject to this paragraph (c).

(iii) *Basis reduction under this paragraph (c).* (A) *In general.* Under this paragraph (c), M's basis in the S share, $200, is reduced, but not below value, $160, by the lesser of the share's net positive adjustment and disconformity amount. The S share's net positive adjustment is $40. The share's disconformity amount is the excess of its basis, $200, over the share's allocable portion of S's net inside attribute amount. S's net inside attribute amount is the sum of S's basis in Asset 1, $100, and S's basis in the S1 share.

(B) *S's basis in the S1 share.* Although S's actual basis in the S1 share is $100 (S's original $60 basis increased under § 1.1502–32 by $40 (the share's allocable portion of the gain recognized on the sale of Asset 2)), for purposes of computing the S share's disconformity amount, S's net inside attribute amount is determined by treating S's basis in the S1 share as tentatively reduced by the lesser of the S1 share's net positive adjustment and the S1 share's disconformity amount. The S1 share's net positive adjustment is $40 (the year 1 investment adjustment). The S1 share's disconformity amount is the excess of its basis, $100, over the share's allocable portion of S1's net inside attribute amount. S1's net inside attribute amount is equal to the amount of S1's money ($60 from the sale of Asset 2), and is allocable entirely to the sole outstanding S1 share. Thus, the S1 share's disconformity amount is the excess of $100 over $60, or $40. The lesser of the S1 share's net positive adjustment, $40, and its disconformity amount, $40, is $40. Accordingly, for purposes of computing the disconformity amount of the S share, S's net inside attribute amount is determined by treating S's basis in its S1 share as tentatively reduced by $40, from $100 to $60.

(C) *The disconformity amount of M's S share.* S's net inside attribute amount is treated as the sum of its basis in Asset 1, $100, and its tentatively reduced basis in the S1 share, $60, or $160. S's net inside attribute amount is allocable entirely to the sole outstanding S share. Thus, the S share's disconformity amount is the excess of $200 over $160, or $40.

(D) *Amount of reduction.* M's basis in its S share is reduced by the lesser of the S share's net positive adjustment, $40, and disconformity amount, $40, or $40. Accordingly, M's basis in the S share is reduced by $40, from $200 to $160.

(E) *Effect on S's basis in its S1 share.* The tentative reduction under this paragraph (c) has no effect on S's actual basis in the S1 share. Thus, after the application of this paragraph (c), S owns the S1 share with a basis of $100 (S's original $60 basis increased under § 1.1502–32 by $40 (the share's allocable portion of the gain recognized on the sale of Asset 2)).

(iv) *Application of paragraph (d) of this section.* Because M's sale of the S share is not a transfer of a loss share after the application of this paragraph (c), paragraph (d) of this section does not apply to the transfer.

(d) *Attribute reduction to prevent duplication of loss*—(1) *In general.* The rules of this paragraph (d) reduce attributes of S and its lower-tier subsidiaries to the extent they duplicate a net loss on shares of S stock transferred by members in one transaction. This rule furthers single-entity principles by preventing S (or its lower-tier subsidiaries) from using deductions and losses to the extent that the group or its members (including former members) have either used, or preserved for later use, a corresponding loss in S shares.

(2) *Attribute reduction rule*—(i) *General rule.* If a transferred share is a loss share after taking into account the effects of all applicable rules of law, including any adjustments under paragraph (b), (c), or (d)(5)(iii) of this section, S's attributes are reduced by S's attribute reduction amount immediately before the transfer. S's attribute reduction amount is determined under paragraph (d)(3) of this section and applied in accordance with the provisions of paragraphs (d)(4), (d)(5), and (d)(6) of this section. In addition, paragraph (d)(7) of this section

provides for additional attribute reduction in the case of certain transfers due to worthlessness and certain transfers not followed by a separate return year.

(ii) *Attribute reduction amount less than five percent of value.* This paragraph (d) generally does not apply to a transaction if the aggregate attribute reduction amount in the transaction is less than five percent of the aggregate value of the shares transferred by members in the transaction. However, in such a case, P may elect to apply this paragraph (d) to the transaction. If such an election is made, this paragraph (d) will apply with respect to the entire aggregate attribute reduction amount determined in the transaction. Such an election is made in the manner provided in paragraph (e)(5) of this section.

(3) *Attribute reduction amount*—(i) *In general.* S's *attribute reduction amount* is the lesser of—

(A) The net stock loss (as defined in paragraph (d)(3)(ii) of this section); and

(B) S's aggregate inside loss (as defined in paragraph (d)(3)(iii) of this section).

(ii) *Net stock loss.* The *net stock loss* is the excess, if any, of—

(A) The aggregate basis of all shares of S stock transferred by members in the transaction; over

(B) The aggregate value of those shares.

(iii) *Aggregate inside loss*—(A) *In general.* S's *aggregate inside loss* is the excess, if any, of—

(*1*) S's net inside attribute amount; over

(*2*) The value of all outstanding shares of S stock.

(B) *Net inside attribute amount.* S's *net inside attribute amount* generally has the same meaning as in paragraph (c)(5) of this section. However, if S holds stock of a lower-tier subsidiary, the provisions of paragraph (d)(5) of this section (and not the provisions of paragraph (c)(6) of this section) modify the computation of S's net inside attribute amount for purposes of this paragraph (d).

(iv) *Lower-tier subsidiaries.* See paragraph (d)(5) of this section for special rules relating to the application of this paragraph (d) if S owns shares of stock of a subsidiary.

(4) *Application of attribute reduction amount*—(i) *Attributes available for reduction.* S's attributes available for reduction under this paragraph (d) are—

(A) *Category A.* Capital loss carryovers;

(B) *Category B.* Net operating loss carryovers;

(C) *Category C.* Deferred deductions; and

(D) *Category D.* Basis of assets other than assets identified as Class I assets in §1.338–6(b)(1).

(ii) *Rules of application*—(A) *Category A, Category B, and Category C attributes.* S's attribute reduction amount is first allocated and applied to reduce the attributes in Category A, Category B, and Category C.

(*1*) *Attribute reduction amount less than total attributes in Category A, Category B, and Category C.* If S's attribute reduction amount is less than S's total attributes in Category A, Category B, and Category C, all of S's attribute reduction amount will be applied to reduce such attributes. However, P may specify the allocation of S's attribute reduction amount among such attributes. An election to specify the allocation of S's attribute reduction amount is made in the manner provided in paragraph (e)(5) of this section. To the extent that P does not specify an allocation of S's attribute reduction amount, S's attribute reduction amount will be applied to reduce any Category A attributes not reduced as a result of the specific allocation of S's attribute reduction amount, from oldest to newest, until they are eliminated. Then, any remaining attribute reduction amount will be applied to reduce any Category B attributes not reduced as a result of the specific allocation of S's attribute reduction amount, from oldest to newest, until they are eliminated. Finally, any remaining attribute reduction amount will be applied to reduce any Category C attributes not reduced as a result of the specific allocation of S's attribute reduction amount, proportionately.

(*2*) *Attribute reduction amount not less than the total attributes in Category A, Category B, and Category C.* If S's attribute reduction amount equals or exceeds S's total attributes in Category A, Category B, and Category C, all such

attributes are eliminated and any remaining attribute reduction amount is allocated and applied as provided in paragraphs (d)(4)(ii)(B) and (d)(4)(ii)(C) of this section.

(B) *Category D attributes.* Any attribute reduction amount not applied to reduce S's Category A, Category B, and Category C attributes is allocated and applied as provided in this paragraph (d)(4)(ii)(B) and, to the extent applicable, paragraph (d)(5) of this section.

(*1*) *Allocation if S holds stock of another subsidiary.* If S holds shares of stock of another subsidiary, the attribute reduction amount not applied to reduce S's Category A, Category B, and Category C attributes is first allocated between S's shares of lower-tier subsidiary stock and S's other Category D assets in the manner provided in paragraph (d)(5)(ii) of this section. S's attribute reduction amount allocated to shares of lower-tier subsidiary stock is applied to reduce S's bases in those shares, becomes an attribute reduction amount of the lower-tier subsidiary, and, subject to certain limitations, reduces the lower-tier subsidiary's attributes. See paragraphs (d)(5)(iii) through (d)(5)(vi) of this section.

(*2*) *Allocation and application of attribute reduction amount not applied to lower-tier subsidiary stock.* Any portion of S's attribute reduction amount not applied to reduce S's Category A, Category B, and Category C attributes and not allocated to lower-tier subsidiary stock is allocated to S's Category D assets other than lower-tier subsidiary stock in the manner provided in this paragraph (d)(4)(ii)(B)(*2*). Such amount is first allocated to S's bases (if any) in its assets identified as Class VII assets in §1.338–6(b)(2)(vii). If the attribute reduction amount allocated to Class VII assets is less than S's aggregate basis in those assets, it is applied proportionately (by basis) to reduce the bases of such assets. If the attribute reduction amount allocated to Class VII assets equals or exceeds S's aggregate basis in those assets, it is applied to reduce the bases of such assets to zero. Any remaining attribute reduction amount is then allocated and applied in the same manner to reduce S's bases (if any) in assets identified as Class VI assets in §1.338–6(b)(2)(vi), and then to reduce S's bases (if any) in its assets identified in §1.338–6(b)(2) as Class V, Class IV, Class III, and Class II, successively.

(C) *Attribute reduction amount exceeding attributes available for reduction.* If the amount to be allocated and applied to attributes in Category D other than lower-tier subsidiary stock exceeds the amount of attributes in that category, then—

(*1*) To the extent of any liabilities of S that are not taken into account for tax purposes before the transfer, such excess amount is suspended. The suspended amount is applied proportionately to reduce any amounts attributable to S that would be deductible or capitalizable as a result of such liabilities being taken into account by S or any other person. Solely for purposes of this paragraph (d)(4)(ii)(C)(*1*) and paragraph (d)(5)(ii)(B) of this section, the term *liability* means any liability or obligation the satisfaction of which would be required to be capitalized as an assumed liability by a person that purchased all of S's assets and assumed all of S's liabilities in a single transaction.

(*2*) To the extent such excess amount is greater than any amount suspended under paragraph (d)(4)(ii)(C)(*1*) of this section, it is disregarded and has no further effect.

(iii) *Time and effect of attribute reduction.* In general, the reduction of attributes is effective immediately before the transfer of a loss share of S stock. If the reduction to a member's basis in a share of lower-tier subsidiary stock exceeds the basis of that share, to the extent the excess is not restored under paragraph (d)(5)(vi) of this section it is an excess loss account in that share (and such excess loss account is not taken into account under §1.1502–19 or otherwise as a result of the transaction). The reductions to attributes required under this paragraph (d)(4), including by reason of paragraph (d)(5)(v) of this section (tier down of attribute reduction amounts to lower-tier subsidiaries), are not noncapital, nondeductible expenses described in §1.1502–32(b)(2)(iii).

(5) *Special rules applicable if S holds stock of another subsidiary.* If S holds

shares of stock of any other subsidiary (S1) as of a transfer of loss shares of S stock, the rules of this paragraph (d)(5) apply with respect to each such subsidiary.

(i) *Treatment of lower-tier subsidiary stock for computation of S's attribute reduction amount.* For purposes of determining S's net inside attribute amount and attribute reduction amount under paragraph (d)(3) of this section—

(A) *Single share.* All of S's shares of S1 stock held as of the transfer of S stock (whether or not transferred in, or held by S immediately after, the transaction) are treated as a single share of stock (generally referred to as the S1 stock); and

(B) *Deemed basis.* S's basis in its S1 stock is treated as its *deemed basis* in the stock, which is equal to the greater of—

(*1*) The sum of S's basis in each share of S1 stock (adjusted to reflect any gain or loss recognized on the transfer of any S1 shares in the transaction, whether allowed or disallowed); and

(*2*) The portion of S1's net inside attribute amount allocable to S's shares of S1 stock.

(C) *Multiple tiers.* For purposes of computing deemed basis under paragraph (d)(5)(i)(B) of this section, a subsidiary's basis in stock of a lower-tier subsidiary is the deemed basis in that lower-tier subsidiary stock. Thus, if stock is held in multiple tiers, the computation of deemed basis begins at the lowest tier, so that the computation of deemed basis at each tier takes into account the deemed basis of all lower-tier shares.

(ii) *Allocation of S's attribute reduction amount between lower-tier subsidiary stock and other Category D assets.* The portion of S's attribute reduction amount that is not applied to reduce S's Category A, Category B, and Category C attributes must be allocated between each of S's deemed single shares of S1 stock and all of S's other Category D assets. For this purpose, S's Category D assets other than lower-tier subsidiary stock are treated as one asset with a basis equal to the aggregate bases of all Category D assets other than lower-tier subsidiary stock (non-stock Category D asset). S's attribute reduction amount is allocated proportionately (by basis) between (among) the non-stock Category D asset and S's deemed single share(s) of subsidiary stock. (See paragraphs (d)(4)(ii)(B)(*2*) and (d)(4)(ii)(C) of this section regarding the portion of S's attribute reduction amount allocated to the Category D assets other than lower-tier subsidiary stock.) For allocation purposes, S's basis in each deemed single share of S1 stock is its deemed basis (determined under paragraphs (d)(5)(i)(B) and (d)(5)(i)(C) of this section), reduced by—

(A) The value of S's transferred shares of S1 stock; and

(B) The nontransferred S1 shares' allocable portion of the excess of S1's non-loss assets over S1's liabilities (including liabilities described in paragraph (d)(4)(ii)(C)(*1*) of this section). For this purpose, S1's non-loss assets are—

(*1*) S1's assets identified as Class I assets in § 1.338–6(b)(1),

(*2*) The value of S1's transferred shares of lower-tier subsidiary stock, and

(*3*) The nontransferred lower-tier subsidiary shares' allocable portions of lower-tier non-loss assets (net of liabilities, including liabilities described in paragraph (d)(4)(ii)(C)(*1*) of this section) of all lower-tier subsidiaries.

(iii) *Application of attribute reduction amount to S's S1 stock.* The portion of S's attribute reduction amount allocated under paragraph (d)(5)(ii) of this section to each deemed single share of S1 stock (allocated attribute reduction amount) is apportioned among, and applied to reduce S's bases in, individual S1 shares in accordance with the following—

(A) No portion of the allocated attribute reduction amount is apportioned to an individual share of transferred S1 stock if gain or loss is recognized on its transfer (recognition transfer);

(B) The allocated attribute reduction amount is apportioned among all of S's other shares of S1 stock in a manner that, first reduces the loss in and disparity among S's bases in loss shares of S1 preferred stock to the greatest extent possible, and then reduces the disparity among S's bases in the shares of S1 common stock (other than those

transferred in a recognition transfer) to the greatest extent possible;

(C) The allocated attribute reduction amount apportioned to an individual S1 share is applied to reduce the basis of that share to, but not below, value if the share is either a preferred share or a common share that is transferred other than in a recognition transfer; and

(D) The allocated attribute reduction amount apportioned to an individual S1 share is applied to reduce the basis of that share without regard to value if the share is a common share that is not transferred in the transaction.

(iv) *Unapplied allocated attribute reduction amount.* Any portion of the allocated attribute reduction amount that is not applied to reduce S's basis in a share of S1 stock has no effect on any other attributes of S, it is not a noncapital, nondeductible expense of S, and it does not cause S to recognize income or gain. However, such amounts continue to be part of the allocated attribute reduction amount for purposes of the tier down rule in paragraph (d)(5)(v) of this section.

(v) *Tier down of attribute reduction amount*—(A) *General rule.* The allocated attribute reduction amount of each deemed single share of S1 stock is an attribute reduction amount of S1 (tier-down attribute reduction amount). Accordingly, the tier-down attribute reduction amount, in combination with any attribute reduction amount computed with respect to the transferred S1 shares (if any) (direct S1 attribute reduction amount), applies to reduce S1's attributes under the provisions of this paragraph (d). The tier-down attribute reduction amount is an attribute reduction amount of S1 that must be allocated to S1's assets, and may become an allocated attribute reduction amount of lower-tier subsidiary stock (and thus a tier-down attribute reduction amount of a lower-tier subsidiary), even if its application to S1's attributes is limited under paragraph (d)(5)(v)(B) of this section.

(B) *Conforming limitation on reduction of lower-tier subsidiary's attributes.* Notwithstanding the general rule in paragraph (d)(5)(v)(A) of this section, and unless P elects otherwise in the manner provided in paragraph (e)(5) of this section, the application of S1's tier-down attribute reduction amount to S1's attributes is limited to an amount equal to the excess of the portion of S1's net inside attribute amount that is allocable to all S1 shares held by members as of the transaction (whether or not transferred in the transaction) over the sum of—

(*1*) Any direct S1 attribute reduction amount;

(*2*) The aggregate value of all S1 shares transferred by members in the transaction with respect to which gain or loss was recognized (recognition transfer);

(*3*) The sum of all members' bases (after any reduction under this section, including this paragraph (d)) in any shares of S1 stock transferred by members in the transaction (other than in a recognition transfer), reduced by any direct S1 attribute reduction amount computed with respect to the transfer of such S1 shares; and

(*4*) The sum of all members' bases (after any reduction under this section, including this paragraph (d)) in any nontransferred shares of S1 stock held as of the transaction.

(vi) *Stock basis restoration*—(A) *In general.* After paragraph (d)(5)(v) of this section has applied with respect to all shares of subsidiary stock transferred in the transaction, lower-tier subsidiary stock basis is restored under this paragraph (d)(5)(vi). Under this paragraph (d)(5)(vi), the reductions to members' bases in shares of lower-tier subsidiary stock under paragraph (d)(5)(iii) of this section are reversed to the extent necessary to restore such bases to an amount that conforms the basis of each such share to its allocable portion of the subsidiary's net inside attribute amount, taking into account any reductions under this paragraph (d). Restoration adjustments are first made at the lowest tier and then at each next higher tier successively. Restoration adjustments do not tier up to affect the bases of higher-tier shares. Rather, restoration is computed and applied separately at each tier. For purposes of this rule, when computing a subsidiary's net inside attribute amount—

(*1*) The subsidiary's basis in stock of a lower-tier subsidiary is the actual

basis of the stock after application of this paragraph (d); and

(*2*) Any attribute reduction amount allocated to the subsidiary's Category D assets other than lower-tier subsidiary stock that is suspended under paragraph (d)(4)(ii)(C)(*1*) of this section is treated as reducing the subsidiary's net inside attribute amount.

(B) *Election not to restore basis.* Notwithstanding paragraph (d)(5)(vi)(A) of this section, P may elect not to restore basis in stock of a lower-tier subsidiary that was reduced under paragraph (d)(5)(iii) of this section. An election not to restore lower-tier subsidiary stock basis is made in the manner provided in paragraph (e)(5) of this section.

(6) *Elections to reduce the potential for loss duplication*—(i) *In general.* Notwithstanding the general operation of this paragraph (d), P may elect to reduce the potential for loss duplication, and thereby reduce or avoid attribute reduction. To the extent of S's attribute reduction amount tentatively computed without regard to any election under this paragraph (d)(6), P may elect—

(A) To reduce all or any portion (including any portion in excess of a specified amount) of members' bases in transferred loss shares of S stock;

(B) To reattribute all or any portion (including any portion in excess of a specified amount) of S's Category A, Category B, and Category C attributes (including such attributes of lower-tier subsidiaries), to the extent they would otherwise be subject to reduction under this paragraph (d); or

(C) Any combination thereof.

(ii) *Manner and effect of election.* An election to reduce loss duplication under this paragraph (d)(6) is made in the manner provided in paragraph (e)(5) of this section. Although such elections are irrevocable, they have no effect—

(A) If there is no attribute reduction amount; or

(B) To the extent S's attribute reduction amount is less than the amount specified in the election.

(iii) *Order of application*—(A) *Stock of one subsidiary transferred in the transaction.* If shares of stock of only one subsidiary are transferred in the transaction, any stock basis reduction and reattribution of attributes (including from lower-tier subsidiaries) is deemed to occur immediately before the application of this paragraph (d). If a transferred share is still a loss share after giving effect to this election, the other provisions of this paragraph (d) then apply with respect to that share.

(B) *Stock of multiple subsidiaries transferred in the transaction.* If shares of stock of more than one subsidiary are transferred in the transaction and elections under this paragraph (d)(6) are made with respect to transfers of stock of subsidiaries in multiple tiers, effect is given to the elections from the lowest tier to the highest tier in the manner provided in this paragraph (d)(6)(iii)(B). The amount of the election for the transfer at the lowest tier is determined by applying this paragraph (d) with respect to the transferred loss shares of this lowest-tier subsidiary immediately after applying paragraphs (b) and (c) of this section to the stock of such subsidiary. The effect of any stock basis reduction or reattribution of losses immediately tiers up under § 1.1502–32 to adjust members' bases in higher-tier shares. Elections and adjustments are then made with respect to transfers at each next higher tier successively.

(iv) *Special rules for reattribution elections*—(A) *In general.* Because the reattribution election is intended to provide the group a means to retain certain S attributes, and not to change the location of attributes where S continues to be a member of the same group as P, the election to reattribute attributes may only be made if S becomes a nonmember (within the meaning of § 1.1502–19(c)(2)) as a result of the transaction and S does not become a member of any group that includes P. The election to reattribute S's attributes can only be made for attributes in Category A, Category B, and Category C. The attributes that would otherwise be reduced under paragraph (d)(4) of this section may be reattributed to P. Accordingly, P may specify the attributes in Category A, Category B, and Category C to be reattributed. Such an election is made in the manner provided in paragraph (e)(5) of this section. To the extent that P elects to reattribute attributes but

does not specify the attributes to be reattributed, any attributes not specifically reattributed will be reattributed in the default amount, order, and category described in paragraph (d)(4)(ii)(A)(*1*) of this section. P succeeds to reattributed attributes as if such attributes were succeeded to in a transaction to which section 381(a) applies. Any owner shift of the subsidiary (including any deemed owner shift resulting from section 382(g)(4)(D) or section 382(l)(3)) in connection with the transaction is not taken into account under section 382 with respect to the reattributed attributes. (See §1.1502–96(d) for rules relating to section 382 and the reattribution of losses under this paragraph (d)(6).) The reattribution of S's attributes is a noncapital, nondeductible expense described in §1.1502–32(b)(2)(iii). See §1.1502–32(c)(1)(ii)(A) regarding special allocations applicable to such noncapital, nondeductible expense. If P elects to reattribute S attributes (including attributes of a lower-tier subsidiary) and reduce S stock basis, the reattribution is given effect before the stock basis reduction.

(B) *Insolvency limitation*. If S, or any higher-tier subsidiary, is insolvent within the meaning of section 108(d)(3) at the time of the transfer, S's losses may be reattributed only to the extent they exceed the sum of the separate insolvencies of any subsidiaries (taking into account only S and its higher-tier subsidiaries) that are insolvent. For purposes of determining insolvency, liabilities owed to higher-tier members are not taken into account, and stock of a subsidiary that is limited and preferred as to dividends and that is not owned by higher-tier members is treated as a liability to the extent of the amount of preferred distributions to which the stock would be entitled if the subsidiary were liquidated on the date of the transfer.

(C) *Limitation on reattribution from lower-tier subsidiaries*. P's ability to reattribute attributes of lower-tier subsidiaries is limited under this paragraph (d)(6)(iv)(C) in order to prevent circular computations of the attribute reduction amount. Accordingly, attributes that would otherwise be reduced as a result of tier-down attribute reduction under paragraph (d)(5)(v) of this section may only be reattributed to the extent that the reduction in the basis of any lower-tier subsidiary stock resulting from the noncapital, nondeductible expense (as allocated under §1.1502–32(c)(1)(ii)(A)(*2*)) will not create an excess loss account in any such stock.

(v) *Special rules for stock basis reduction elections*—(A) *In general*. An election to reduce basis in S stock is made with respect to all members' bases in loss shares of S stock that are transferred in the transaction. The reduction is allocated among all such shares in proportion to the amount of loss on each share. This reduction in S stock basis is a noncapital, nondeductible expense described in §1.1502–32(b)(2)(iii) of the transferring member.

(B) *Adjustment to the attribute reduction amount*. The attribute reduction amount (determined under paragraph (d)(3)(i) of this section) is treated as reduced by the amount of any elective reduction in the basis of the S stock under this paragraph (d)(6). Accordingly, the election to reduce stock basis under this paragraph (d)(6) is treated as reducing or eliminating the duplication even if the shares of S stock are loss shares after giving effect to the election.

(C) *Deemed stock basis reduction election in the case of certain disallowed stock losses*. If there is a net stock loss in transferred shares after taking into account any actual elections under this paragraph (d)(6), and the stock loss would otherwise be permanently disallowed (for example, under section 311(a)), P will be deemed to have made a stock basis reduction election equal to such net stock loss.

(7) *Additional attribute reduction in the case of certain transfers due to worthlessness and certain transfers not followed by a separate return year*—(i) *In general*. Notwithstanding any other provision of this paragraph (d), if a transfer is subject to this paragraph (d)(7) any of S's Category A, Category B, and Category C attributes not otherwise reduced or reattributed under this paragraph (d), and any credit carryover attributable to S, including any consolidated credits that would be apportioned to S under the principles of §1.1502–79 if S

had a separate return year, are eliminated. Attributes other than consolidated tax attributes are eliminated under this paragraph (d)(7)(i) immediately before the transfer subject to this paragraph (d)(7)(i). The elimination of attributes under this paragraph (d)(7)(i) is not a noncapital, nondeductible expense described in § 1.1502–32(b)(2)(iii).

(ii) *Transfers subject to this paragraph (d)(7).* A transfer is subject to this paragraph (d)(7) if—

(A) M transfers a share of S stock solely by reason of a transfer defined in paragraph (f)(10)(i)(D) of this section (worthlessness where the provisions of § 1.1502–80(c) are satisfied), M recognizes a net deduction or loss on the share, and S is a member of the group on the day following the last day of the group's taxable year during which the share becomes worthless under section 165 (taking into account the provisions of § 1.1502–80(c)), or

(B) M recognizes a net deduction or loss on the stock of S in a transaction in which S ceases to be a member and does not become a nonmember within the meaning of § 1.1502–19(c)(2).

(iii) *Example.* The application of this paragraph (d) to transfers due to worthlessness and to loss transfers not followed by separate return years is illustrated by the following example.

Example. (i) *Worthlessness where S continues as a member.* M owns the sole share of S stock. The share is worthless under section 165. In addition, S has disposed of all its assets within the meaning of § 1.1502–19(c)(1)(iii)(A) and therefore satisfies the provisions of § 1.1502–80(c). M claims a worthless securities deduction with respect to the share. The worthlessness is a transfer of the S share, a loss share, and therefore subject to this section. After the application of paragraphs (b) and (c) of this section, M's basis in the share (and therefore M's net stock loss) is $75. The portion of the consolidated net operating loss attributable to S is $100. Under the general rules of this paragraph (d), S's attribute reduction amount is $75 (the lesser of M's $75 net stock loss and S's $100 aggregate inside loss ($100 net inside attribute amount over $0 value of S share)). S's attributes are reduced by $75, from $100 to $25. In addition, if S remains a member of the P group, this paragraph (d)(7) applies to eliminate the remaining $25 of the consolidated net operating loss attributable to S because the S share is worthless, and M recognizes a deduction (taking into account § 1.1502–80(c)) with respect to the share. Accordingly, after the application of this section, M recognizes a $75 worthless securities deduction, S has $0 net inside attributes, and the consolidated net operating loss is reduced by a total of $100.

(ii) *Dissolution of insolvent subsidiary.* The facts are the same as in paragraph (i) of this *Example,* except that S is insolvent, does not dispose of all its assets within the meaning of § 1.1502–19(c)(1)(iii)(A), M causes S to be legally dissolved, and the S share held by M is cancelled without consideration. Under paragraph (d)(7)(ii)(B) of this section, the dissolution of S is subject to this paragraph (d)(7) and the result is the same as in paragraph (i) of this *Example.* The result would also be the same if instead of being legally dissolved, S was converted into an entity that is disregarded as separate from M.

(iii) *Stock cancelled in connection with a section 381(a) transaction with another member.* M owns the sole share of S common stock with a basis of $75. M1 owns the sole share of S preferred stock. The value of S's assets (net of liabilities) is less than the liquidation preference on the S preferred stock. In a reorganization described in section 368(a)(1)(D), S transfers all of its assets to M2 in exchange for M2 common stock and M2's assumption of S's liabilities, S distributes all of the M2 common stock received in the exchange to M1 in exchange for M1's S preferred stock, the S common stock held by M is cancelled without consideration, and S ceases to exist. Notwithstanding that M is not entitled to treat its common share of S stock as worthless until § 1.1502–80(c) is satisfied, M's share is transferred within the meaning of paragraph (f)(10)(i)(A) of this section because M ceases to own the share in a transaction in which, but for this section (and notwithstanding the deferral of any amount recognized on the transfer, other than by reason of § 1.1502–13), M would recognize a loss or deduction with respect to the share. Accordingly, there is a transfer of the S common share and this section applies to the transfer. There are no adjustments under paragraphs (b) or (c) of this section because no investment adjustments have been applied to the bases of the shares. The transfer of the S common stock is subject to the general rules of this paragraph (d), but is not subject to the additional attribute reduction under this paragraph (d)(7) because the transfer was not solely by reason of worthlessness where § 1.1502–80(c) is satisfied, and S did not cease to be a member because M2 is a successor to S.

(iv) *Stock cancelled in connection with a section 381(a) transaction with a nonmember.* The facts are the same as in paragraph (iii) of this *Example,* except that the S preferred share is held by X, instead of M2 acquiring

S's assets, S merges into Y in a reorganization described in section 368(a)(1)(A), M1 receives all of the Y stock issued in the merger in exchange for M1's S preferred stock, and Y does not become a member as a result of the transaction. M treats the cancelled S common stock as worthless, and §1.1502–80(c) is satisfied because S ceases to be a member. In this case, there is a transfer of M's S common share because it becomes worthless (taking into account §1.1502–80(c)); because M ceases to own the share in a transaction in which, but for this section (and notwithstanding the deferral of any amount recognized on the transfer, other than by reason of §1.1502–13), M would recognize a loss or deduction with respect to the share; and because M and S cease to be members of the same group. The transfer of the S common stock is subject to the general rules of this paragraph (d), but is not subject to the additional attribute reduction under this paragraph (d)(7) because the transfer was not solely by reason of worthlessness where §1.1502–80(c) is satisfied and, although S did cease to be a member, S became a nonmember within the meaning of §1.1502–19(c)(2) because Y is a successor to S.

(8) *Examples*. The application of this paragraph (d) is illustrated by the following examples:

Example 1. Computation of attribute reduction amount. (i) *Transfer of all S shares.* (A) *Facts.* M owns all 100 of the outstanding shares of S stock with a basis of $2 per share. S owns land with a basis of $100, has a $120 loss carryover, and has no liabilities. Each share has a value of $1. M sells 30 of the S shares to X for $30. As a result of the sale, M and S cease to be members of the same group. Accordingly, all 100 of the S shares are transferred. See paragraphs (f)(10)(i)(A), (f)(10)(i)(B), and (f)(10)(i)(C) (with respect to the 30 S shares sold to X) of this section. M's transfer of the S shares is a transfer of loss shares and therefore subject to this section.

(B) *Application of paragraphs (b) and (c) of this section.* Although the transfer is subject to this section, there is no basis redetermination under paragraph (b) of this section because there is no disparity among M's bases in shares of S common stock and there are no shares of S preferred stock outstanding (so there can be no unrecognized gain or loss on preferred stock). See paragraph (b)(1)(ii)(A) of this section. Therefore, after the application of paragraph (b) of this section, the share is still a loss share and, as such, subject to paragraph (c) of this section. No adjustment is required under paragraph (c) of this section because the net positive adjustment is $0. See paragraph (c)(3) of this section. Thus, after the application of paragraph (c) of this section, M's transfer of the S shares is still a transfer of loss shares and, accordingly, subject to this paragraph (d).

(C) *Attribute reduction under this paragraph (d).* Under this paragraph (d), S's attributes are reduced by S's attribute reduction amount. Paragraph (d)(3) of this section provides that S's attribute reduction amount is the lesser of the net stock loss and S's aggregate inside loss. The net stock loss is the excess of the $200 aggregate bases of the transferred shares over the $100 aggregate value of the transferred shares, or $100. S's aggregate inside loss is the excess of its $220 net inside attribute amount (the sum of the $100 basis in the land and the $120 loss carryover) over the $100 value of all outstanding S shares, or $120. The attribute reduction amount is therefore the lesser of the $100 net stock loss and the $120 aggregate inside loss, or $100. Under paragraph (d)(4) of this section, S's $100 attribute reduction amount is allocated and applied to reduce S's $120 loss carryover to $20. Under paragraph (d)(4)(iii) of this section, the reduction of the loss carryover is not a noncapital, nondeductible expense and has no effect on M's basis in the S stock.

(ii) *Transfer of less than all S shares.* (A) *Facts.* The facts are the same as in paragraph (i)(A) of this *Example 1*, except that M only sells 20 S shares to X. M's sale of the 20 S shares is a transfer of loss shares and therefore subject to this section. See paragraph (f)(10)(i)(A) and (f)(10)(i)(C) of this section. (There is no transfer of the remaining shares because S and M remain members of the same group.)

(B) *Application of paragraphs (b) and (c) of this section.* No adjustment is required under paragraph (b) or paragraph (c) of this section for the reasons set forth in paragraph (i)(B) of this *Example 1*. Thus, after the application of paragraph (c) of this section, M's transfer of the S shares is still a transfer of loss shares and, accordingly, subject to this paragraph (d).

(C) *Attribute reduction under this paragraph (d).* Under this paragraph (d), S's attributes are reduced by S's attribute reduction amount. Paragraph (d)(3) of this section provides that S's attribute reduction amount is the lesser of the net stock loss and S's aggregate inside loss. The net stock loss is $20, the excess of the $40 aggregate bases of the transferred shares over the $20 aggregate value of the transferred shares. S's aggregate inside loss is $120, the excess of its $220 net inside attribute amount (the sum of the $100 basis in the land and the $120 loss carryover) over the $100 value of all outstanding S shares. The attribute reduction amount is therefore $20, the lesser of the $20 net stock loss and the $120 aggregate inside loss. Under paragraph (d)(4) of this section, S's $20 attribute reduction amount is allocated and applied to reduce S's $120 loss carryover to $100.

Example 2. Proportionate allocation of attribute reduction amount. (i) *Facts.* M owns the sole outstanding share of S stock with a basis of $150. S owns land with a basis of $60, a factory with a basis of $30, publicly traded property with a basis of $30 and goodwill with a basis of $30. M sells its S share for $90. M's sale of the S share is a transfer of a loss share and therefore subject to this section. See paragraphs (f)(10)(i)(A), (f)(10)(i)(B), and (f)(10)(i)(C) of this section.

(ii) *Application of paragraphs (b) and (c) of this section.* Although the transfer is subject to this section, there is no basis redetermination under paragraph (b) of this section because there is only one share of S stock outstanding (and so there can be no disparity among members' bases in common shares and there are no outstanding preferred shares with respect to which there can be unrecognized gain or loss). See paragraph (b)(1)(ii)(A) of this section. Therefore, after the application of paragraph (b) of this section, the share is still a loss share and, as such, subject to paragraph (c) of this section. No adjustment is required under paragraph (c) of this section because both the disconformity amount and the net positive adjustment are $0. See paragraph (c)(3) of this section. Thus, after the application of paragraph (c) of this section, M's sale of the S share is still a transfer of a loss share and, accordingly, subject to this paragraph (d).

(iii) *Attribute reduction under this paragraph (d).* Under paragraph (d)(3) of this section, S's attribute reduction amount is determined to be $60, the lesser of the $60 net stock loss ($150 basis over $90 value) and S's $60 aggregate inside loss (the excess of S's $150 net inside attribute amount (the $60 basis of the land, plus the $30 basis of the factory, plus the $30 basis of the publicly traded property, plus the $30 basis of the goodwill) over the $90 value of the S share). Under paragraph (d)(4)(ii)(B)(*2*) of this section, the $60 attribute reduction amount is allocated and applied to reduce S's bases in its Category D assets, S's only attributes available for reduction, as follows:

Available attributes, basis in Category D assets	Attribute amount	Allocable portion of attribute reduction amount	Adjusted attribute amount
Class VII, Goodwill	$30	$30	$0
Class V:			
Land	60	(60/90 × 60) 40	20
Factory	30	(30/90 × 60) 20	10
Total Class V	90	60	30
Class II, publicly traded property	30	0	30
Totals	150	60	90

Example 3. Attribute reduction amount less than total attributes in Category A, Category B, and Category C. (i) *No election to prescribe the allocation of S's attribute reduction amount.* (A) *Facts.* P owns the sole outstanding share of M stock with a basis of $1,000 and M owns the sole outstanding share of S stock with a basis of $210. M sells its S share to X for $100. M's sale of the S share is a transfer of a loss share and therefore subject to this section. See paragraphs (f)(10)(i)(A), (f)(10)(i)(B), and (f)(10)(i)(C) of this section. At the time of the sale, S has no liabilities and the following attributes:

Category	Attribute	Attribute amount
Category A	Capital loss carryover	$10
Category B	NOL carryover	200
Category C	Deferred deductions	40
Category D, Class V	Basis in Land	50
Total Attributes		300

(B) *Application of paragraphs (b) and (c) of this section.* Although the transfer is subject to this section, there is no basis redetermination under paragraph (b) of this section because there is only one share of S stock outstanding (and so there can be no disparity among members' bases in common shares and there are no outstanding preferred shares with respect to which there can be unrecognized gain or loss). See paragraph (b)(1)(ii)(A) of this section. Therefore, after the application of paragraph (b) of this section, the share is still a loss share and, as such, subject to paragraph (c) of this section. No adjustment is required under paragraph (c) of this section because both the disconformity amount and the net positive adjustment are $0. See paragraph (c)(3) of this section. Thus, after the application of paragraph (c) of this section, M's transfer of the S share is still a transfer of a loss share and, accordingly, subject to this paragraph (d).

(C) *Attribute reduction under this paragraph (d).* (*1*) *Computation of attribute reduction amount.* Under paragraph (d)(3) of this section, S's attribute reduction amount is the lesser of the $110 net stock loss ($210 basis over $100 value) and S's aggregate inside loss. S's aggregate inside loss is $200 (S's $300 net inside attribute amount (the $10 capital loss

carryover, plus the $200 NOL carryover, plus the $40 deferred deductions, plus the $50 basis in land) less the $100 value of all outstanding S shares). Thus, the attribute reduction amount is $110, the lesser of the $110 net stock loss and S's $200 aggregate inside loss. Under paragraph (d)(4)(ii)(A)(*1*) of this section, the $110 attribute reduction amount is allocated and applied to reduce S's attributes as follows:

Category	Attribute	Attribute amount	Allocation of attribute reduction amount	Adjusted attribute amount
Category A	Capital loss carryover	$10	$10	$0
Category B	NOL carryover	200	100	100
Category C	Deferred deductions	40	0	40
Category D, Class V	Basis in land	50	0	50
Totals		300	110	190

(ii) *Election to prescribe the allocation of attribute reduction amount.* (A) *Facts.* The facts are the same as in paragraph (i)(A) of this *Example 3,* except that P elects to allocate the attribute reduction amount to eliminate the Category C attributes, preserve the capital loss carryover, and reduce Category B attributes.

(B) *Application of paragraphs (b) and (c) of this section.* No adjustment is required under paragraph (b) or paragraph (c) of this section for the reasons set forth in paragraph (i)(B) of this *Example 3.* Thus, after the application of paragraph (c) of this section, M's sale of the S share is still a transfer of a loss share, and accordingly, subject to this paragraph (d).

(C) *Attribute reduction under this paragraph (d).* For the reasons set forth in paragraph (i)(C) of this *Example 3,* under this paragraph (d)(3), S's attribute reduction amount is determined to be $110. M elects to apply S's $110 attribute reduction amount as follows:

Category	Attribute	Attribute amount	Allocation of attribute reduction amount	Adjusted attribute amount
Category A	Capital loss carryover	$10	$0	$10
Category B	NOL carryover	200	70	130
Category C	Deferred deductions	40	40	0
Category D, Class V	Basis of land	50	0	50
Totals		300	110	190

Example 4. Attributes attributable to liability not taken into account. (i) *S operates one business.* (A) *Facts.* On January 1, year 1, M forms S by exchanging $150 for the sole outstanding share of S stock. In year 1, S earns $500, purchases land for $50, spends $100 to build a factory on that land, and then purchases publicly traded property for $250. In year 2, S earns a section 38 general business credit of $50. However, pollution generated by S's business gives rise to an environmental remediation liability under Federal law that would be required to be capitalized if a person purchased S's assets and assumed the liability. Before any amounts have been taken into account with respect to the environmental remediation liability, when the liability has a present value of $500, M sells its S share to X for $150. After giving effect to all other provisions of law, M's basis in the S share is $650 (the original basis of $150 increased under § 1.1502–32 by $500 for the income earned). The sale is therefore a transfer of a loss share of subsidiary stock and subject to this section. See paragraphs (f)(10)(i)(A), (f)(10)(i)(B), and (f)(10)(i)(C) of this section.

(B) *Application of paragraphs (b) and (c) of this section.* Although the transfer is subject to this section, there is no basis redetermination under paragraph (b) of this section because there is only one share of S stock outstanding (and so there can be no disparity among members' bases in common shares and there are no outstanding preferred shares with respect to which there can be unrecognized gain or loss). See paragraph (b)(1)(ii)(A) of this section. Therefore, after the application of paragraph (b) of this section, the share is still a loss share and, as such, subject to paragraph (c) of this section. No adjustment to basis is made under paragraph (c) of this section because, although the net positive adjustment is $500, the disconformity amount is $0. See paragraph (c)(3) of this section. Thus, after the application of paragraph (c) of this section, M's sale of the S share is still a transfer of a loss

share and, accordingly, subject to this paragraph (d).

(C) *Attribute reduction under this paragraph (d).* (*1*) Under paragraph (d)(3) of this section, S's attribute reduction amount is the lesser of the $500 net stock loss ($650 basis over $150 value) and the aggregate inside loss. The aggregate inside loss is $500, computed as the excess of S's $650 net inside attribute amount (the sum of S's $100 basis in the factory, $50 basis in the land, $250 basis in the publicly traded property, and $250 cash remaining after the purchases) over the $150 value of the S share. Thus, S's attribute reduction amount is $500, the lesser of the $500 net stock loss and the $500 aggregate inside loss. Under paragraph (d)(4)(ii)(B)(*2*) of this section, S's $500 attribute reduction amount is allocated and applied to reduce S's attributes as follows:

Available attributes	Attribute amount	Allocable portion of attribute reduction amount	Adjusted attribute amount
Category D:			
Class V Assets:			
Basis of factory	$100	$100	$0
Basis of land	50	50	0
Class II Assets:			
Publicly traded property	250	250	0

(*2*) The remaining $100 attribute reduction amount is not applied to S's $250 cash (Class I asset) or to S's $50 general business tax credit. Under the general rule of this paragraph (d), that remaining $100 attribute reduction amount would have no further effect on S's attributes. However, S has a $500 liability that has not been taken into account. Therefore, under paragraph (d)(4)(ii)(C)(*1*) of this section, the remaining $100 attribute reduction amount is suspended and will be allocated and applied to reduce any amounts that become deductible or capitalizable as a result of the environmental remediation liability later being taken into account. If the liability is satisfied for an amount that is less than $100, under paragraph (d)(4)(ii)(C)(*2*) of this section the remaining portion of that $100 suspended attribute reduction amount is disregarded and has no further effect.

(ii) *Lower-tier subsidiary with additional liability.* (A) *Facts.* The facts are the same as in paragraph (i)(A) of *Example 4,* except that, in addition, S exchanged $50 for the sole outstanding share of stock of S1. S1 has $50 and equipment with an aggregate basis of $0. S1 also has employee medical expense liabilities that have not been taken into account and that would be required to be capitalized if a person purchased S1's assets and assumed the liabilities. At the time of the sale, S's environmental remediation liability had a present value of $475 and S1's employee medical expenses had a present value of $25. For the reasons set forth in paragraph (i)(A) of this *Example 4,* M's sale of the S share is a transfer of a loss share and therefore subject to this section.

(B) *Application of paragraphs (b) and (c) of this section.* No adjustment is made under paragraph (b) or paragraph (c) of this section for the reasons set forth in paragraph (i)(B) of this *Example 4.* Thus, after the application of paragraph (c) of this section, M's sale of the S share is still a transfer of a loss share and, accordingly, subject to this paragraph (d).

(C) *Attribute reduction under this paragraph (d).* (*1*) *Computation of attribute reduction amount.* Under paragraph (d)(3) of this section, S's attribute reduction amount is the lesser of the $500 net stock loss ($650 basis over $150 value) and the aggregate inside loss. The aggregate inside loss is the excess of S's net inside attribute amount over the value of the S share. Under paragraphs (d)(3)(iii)(B) and (d)(5)(i)(B) of this section, S's net inside attribute amount is determined by using S's $50 deemed basis in the S1 share (the greater of S's $50 actual basis in the share and S1's $50 net inside attribute amount). Accordingly, S's net inside attribute amount is $650 (the sum of its $100 basis in the factory, $50 basis in the land, $250 basis in the publicly traded property, $200 cash, and $50 deemed basis in its S1 share). The aggregate inside loss is $500, the excess of S's $650 net inside attribute amount over the $150 value of the S share. Thus, S's attribute reduction amount is $500, the lesser of the $500 net stock loss and S's $500 aggregate inside loss.

(*2*) *Allocation, apportionment, and application of attribute reduction amount.* Under paragraphs (d)(4) and (d)(5)(ii) of this section, S's $500 attribute reduction amount is allocated proportionately (by basis) between its S1 share and its non-stock Category D asset (consisting of all S's Category D assets other than its share of S1 stock, with a basis equal to $600, the aggregate basis of S's non-stock assets). However, under paragraph (d)(5)(ii) of this section, for purposes of allocating S's attribute reduction amount between its non-stock Category D asset and the S1 share, S's $50 deemed basis in its S1 share is treated as reduced by S1's $25 net non-loss assets (its Class I asset, $50 cash over S1's liabilities

(which, for this purpose include the $25 of employee medical expense liabilities not taken into account as of the transfer)). As a result, S's attribute reduction amount is allocated $480 (600/625 × 500) to S's non-stock Category D asset and $20 (25/625 × 500) to the S1 share. The $480 attribute reduction amount allocated to S's non-stock Category D asset produces the same reduction in the bases of S's assets (other than the S1 stock) as in paragraph (i)(C) of this *Example 4;* in addition, the $80 attribute reduction amount not applied to reduce S's attributes is suspended and applied to reduce any amounts that become deductible or capitalizable as a result of the environmental remediation liability later being taken into account. If the liability is satisfied for an amount that is less than $80, under paragraph (d)(4)(ii)(C)(*2*) of this section the remaining portion of that $80 suspended attribute reduction amount is disregarded and has no further effect. Because the S1 share is not transferred within the meaning of paragraph (f)(10) of this section, the allocated attribute reduction amount apportioned to the S1 share is applied fully to reduce the basis of the S1 share to $30. See paragraph (d)(5)(iii) of this section.

(D) *Tier down of S's attribute reduction amount.* The $20 portion of S's attribute reduction amount allocated to the S1 share is an attribute reduction amount of S1. Because S1 holds only cash, it has no attributes available for reduction under this paragraph (d). However, because S1 has a $25 liability not taken into account for tax purposes, paragraph (d)(4)(ii)(C)(*1*) of this section requires that $20 of the unapplied attribute reduction amount be suspended and then allocated and applied to reduce any amounts that become deductible or capitalizable as a result of the employee medical expense liabilities later being taken into account. If these liabilities are satisfied for an amount that is less than $20, under paragraph (d)(4)(ii)(C)(*2*) of this section the remaining portion of that $20 suspended attribute reduction amount is disregarded and has no further effect.

Example 5. Wholly owned lower-tier subsidiary (no lower-tier transfer). (i) *Application of conforming limitation.* (A) *Facts.* M owns the sole outstanding share of S stock with a basis of $250. S owns Asset with a basis of $100 and the only two outstanding shares of S1 stock (Share A has a basis of $40 and Share B has a basis of $60). S1 owns Asset 1 with a basis of $50. M sells its S share to P1, the common parent of another consolidated group, for $50. The sale is a transfer of a loss share and therefore subject to this section. See paragraphs (f)(10)(i)(A), (f)(10)(i)(B), and (f)(10)(i)(C) of this section.

(B) *Application of paragraphs (b) and (c) of this section.* Although the transfer is subject to this section, there is no basis redetermination under paragraph (b) of this section because there is only one share of S stock outstanding (and so there can be no disparity among members' bases in common shares and there are no outstanding preferred shares with respect to which there can be unrecognized gain or loss). See paragraph (b)(1)(ii)(A) of this section. Therefore, after the application of paragraph (b) of this section, the share is still a loss share and, as such, subject to paragraph (c) of this section. No adjustment is required under paragraph (c) of this section because, although there is a $50 disconformity amount, the net positive adjustment is $0. See paragraph (c)(3) of this section. Thus, after the application of paragraph (c) of this section, M's sale of the S share is still a transfer of a loss share and, accordingly, subject to this paragraph (d).

(C) *Attribute reduction under this paragraph (d).* (*1*) *Computation of attribute reduction amount.* Under paragraph (d)(3) of this section, S's attribute reduction amount is the lesser of M's net stock loss and S's aggregate inside loss. M's net stock loss is $200 ($250 basis over $50 value). S's aggregate inside loss is the excess of S's net inside attribute amount over the value of the S share. Under paragraphs (d)(3)(iii)(B) and (d)(5)(i)(B) of this section, S's net inside attribute amount is $200, computed as the sum of S's $100 basis in Asset and its $100 deemed basis in the deemed single share of S1 stock (computed as the greater of S's $100 aggregate basis in the S1 shares and S1's $50 basis in Asset 1). S's aggregate inside loss is therefore $150, $200 net inside attribute amount over the $50 value of the S share. Accordingly, S's attribute reduction amount is $150, the lesser of the $200 net stock loss and the $150 aggregate inside loss.

(*2*) *Allocation, apportionment, and application of S's attribute reduction amount.* Under paragraphs (d)(4) and (d)(5)(ii) of this section, S's $150 attribute reduction amount is allocated proportionately (by basis) between Asset (non-stock Category D asset) with a basis of $100, and the S1 stock (treated as a single share with a deemed basis of $100). Accordingly, $75 of the attribute reduction amount ($100/$200 × $150) is allocated to Asset and $75 of the attribute reduction amount ($100/$200 × $150) is allocated to the S1 stock. The $75 of the attribute reduction amount allocated to Asset is applied to reduce S's basis in Asset from $100 to $25. The $75 of the attribute reduction amount allocated to the S1 stock is first apportioned between the shares in a manner that reduces disparity to the greatest extent possible. Thus, of the total $75 allocated to the S1 stock, $27.50 is apportioned to Share A and $47.50 is apportioned to Share B. Because neither of the S1 shares is transferred within the meaning of paragraph (f)(10) of this section, the allocated attribute reduction amount apportioned to each of the individual S1 shares is applied

fully to reduce the basis of each share to $12.50. See paragraph (d)(5)(iii) of this section. As a result, immediately after the allocation, apportionment, and application of S's attribute reduction amount, S's basis in Asset is $25 and S's basis in each of the S1 shares is $12.50.

(*3*) *Tier down of S's attribute reduction amount, application of conforming limitation.* Under paragraph (d)(5)(v)(A) of this section, the $75 portion of S's attribute reduction amount allocated to the S1 stock is an attribute reduction amount of S1 (regardless of the extent, if any, to which it is apportioned and applied to reduce the basis of any shares of S1 stock). Under the general rules of this paragraph (d), the $75 tier-down attribute reduction amount would be allocated and applied to reduce S1's basis in Asset 1 from $50 to $0. However, under paragraph (d)(5)(v)(B) of this section, S1's attributes can be reduced by only $25, the excess of the $50 portion of S1's net inside attribute amount that is allocable to all S1 shares held by members as of the transaction over $25, the aggregate amount of members' bases in nontransferred S1 shares after reduction under this paragraph (d). Thus, of S1's $75 tier-down attribute reduction amount, only $25 is applied to reduce S1's basis in Asset 1, from $50 to $25. The $50 unapplied portion of the tier-down attribute reduction amount subject to the conforming limitation has no further effect.

(ii) *Application of basis restoration rule.* (A) *Facts.* The facts are the same as in paragraph (i)(A) of this *Example 5*, except that S's basis in Share A is $15 and S's basis in Share B is $35, and S1's basis in Asset 1 is $100.

(B) *Basis redetermination and basis reduction under paragraphs (b) and (c) of this section.* No adjustment is required under paragraph (b) or paragraph (c) of this section for the reasons set forth in paragraph (i)(B) of this *Example 5*. Thus, after the application of paragraph (c) of this section, M's transfer of the S share is still a transfer of a loss share and, accordingly, subject to this paragraph (d).

(C) *Attribute reduction under this paragraph (d).* (*1*) *Computation of attribute reduction amount.* Under paragraph (d)(3) of this section, S's attribute reduction amount is the lesser of M's net stock loss and S's aggregate inside loss. M's net stock loss is $200 ($250 basis over $50 value). S's aggregate inside loss is the excess of S's net inside attribute amount over the value of the S share. Under paragraphs (d)(3)(iii)(B) and (d)(5)(i)(B) of this section, S's net inside attribute amount is $200, the sum of S's $100 basis in Asset and its $100 deemed basis in the deemed single share of S1 stock (computed as the greater of S's $50 aggregate basis in the S1 shares and S1's $100 basis in Asset 1). S's aggregate inside loss is therefore $150, $200 net inside attribute amount over the $50 value of the S share. Accordingly, S's attribute reduction amount is $150, the lesser of the $200 net stock loss and the $150 aggregate inside loss.

(*2*) *Allocation, apportionment, and application of S's attribute reduction amount.* Under paragraphs (d)(4) and (d)(5)(ii) of this section, S's $150 attribute reduction amount is allocated proportionately (by basis) between Asset (non-stock Category D asset) with a basis of $100, and the S1 stock (treated as a single share with a deemed basis of $100). Accordingly, $75 of the attribute reduction amount ($100/$200 × $150) is allocated to Asset and $75 of the attribute reduction amount ($100/$200 × $150) is allocated to the S1 stock. The $75 of the attribute reduction amount allocated to Asset is applied to reduce S's basis in Asset from $100 to $25. The $75 of the attribute reduction amount allocated to the S1 stock is first apportioned between the shares in a manner that reduces disparity to the greatest extent possible. Thus, of the total $75 allocated to the S1 stock, $27.50 is apportioned to Share A and $47.50 is apportioned to Share B. Because neither of the S1 shares is transferred within the meaning of paragraph (f)(10) of this section, the allocated attribute reduction amount apportioned to each of the individual S1 shares is applied fully to reduce the basis of each share to an excess loss account of $12.50. See paragraph (d)(5)(iii) of this section. As a result, immediately after the allocation, apportionment, and application of S's attribute reduction amount, S's basis in Asset is $25 and S's basis in each of the S1 shares is an excess loss account of $12.50.

(*3*) *Tier down of S's attribute reduction amount.* Under paragraph (d)(5)(v)(A) of this section, the $75 portion of S's attribute reduction amount allocated to S1 stock is an attribute reduction amount of S1 (regardless of the extent, if any, to which it is apportioned and applied to reduce the basis of any shares of S1 stock). Accordingly, under the general rules of this paragraph (d), the $75 tier-down attribute reduction amount is applied to reduce S1's basis in Asset 1 from $100 to $25.

(*4*) *Basis restoration.* Under paragraph (d)(5)(vi)(A) of this section, after this paragraph (d) has been applied with respect to all transfers of subsidiary stock, any reduction made to the basis of a share of lower-tier subsidiary stock under paragraph (d)(5)(iii) of this section is reversed to the extent necessary to conform the basis of that share to the share's allocable portion of the subsidiary's net inside attribute amount (after reduction). S1's net inside attribute amount after the application of this paragraph (d) is $25 and thus each of the two S1 share's allocable portion of S1's net inside attribute amount is $12.50. Accordingly, the reductions to Share A and to Share B under paragraph (d)(5)(iii) of this section are reversed to the extent necessary to restore the basis of each

share to $12.50. Thus, $25 of the $27.50 of reduction to the basis of Share A, and $25 of the $47.50 of reduction to the basis of share B, is reversed, restoring the basis of each share to $12.50.

Example 6. Multiple blocks of lower-tier subsidiary stock outstanding. (i) *Excess loss account taken into account (transfer of upper-tier share causes disposition within the meaning of §1.1502–19(c)(1)(ii)(B)).* (A) *Facts.* M owns the sole outstanding share of S stock with a basis of $200. S holds all five outstanding shares of S1 common stock (Shares A, B, C, D, and E). S has an excess loss account of $20 in Share A and a positive basis of $20 in each of the other shares. The only investment adjustment applied to any S1 share was a negative $20 investment adjustment applied to Share A when it was the only outstanding share, and this amount tiered up and adjusted M's basis in the S share. S1 owns one asset with a basis of $250. M sells its S share to P1, the common parent of a consolidated group, for $20. The sale of the S share is a disposition of Share A under §1.1502–19(c)(1)(ii)(B) (S1 becomes a nonmember because it will have a separate return year as a member of the P1 group). Accordingly, under §1.1502–19(b)(1)(i) and paragraph (a)(3)(i) of this section, before the application of this section, S's excess loss account in Share A is taken into account, increasing S's basis in Share A to $0 and M's basis in its S share to $220. After giving effect to the recognition of the excess loss account, M's sale of the S share is a transfer of a loss share and therefore subject to this section. See paragraphs (f)(10)(i)(A), (f)(10)(i)(B), and (f)(10)(i)(C) of this section.

(B) *Basis redetermination and basis reduction under paragraphs (b) and (c) of this section.* Although the transfer is subject to this section, there is no basis redetermination under paragraph (b) of this section because there is only one share of S stock outstanding (and so there can be no disparity among members' bases in common shares and there are no outstanding preferred shares with respect to which there can be unrecognized gain or loss). See paragraph (b)(1)(ii)(A) of this section. Therefore, after the application of paragraph (b) of this section, the share is still a loss share and, as such, subject to paragraph (c) of this section. No adjustment is made under paragraph (c) of this section because, even though there is a disconformity amount of $140, the net positive adjustment is $0. See paragraph (c)(3) of this section. Thus, after the application of paragraph (c) of this section, M's sale of the S share remains a transfer of a loss share and, accordingly, subject to this paragraph (d).

(C) *Attribute reduction under this paragraph (d).* (*1*) *Computation of attribute reduction amount.* Under paragraph (d)(3) of this section, S's attribute reduction amount is the lesser of M's net stock loss and S's aggregate inside loss. M's net stock loss is $200 ($220 basis over $20 value). S's aggregate inside loss is the excess of S's net inside attribute amount over the value of the S share. Under paragraphs (d)(3)(iii)(B) and (d)(5)(i)(B) of this section, S's net inside attribute amount is $250, S's $250 deemed basis in the deemed single share of S1 stock (computed as the greater of S's $80 aggregate basis in the S1 shares ($0 basis in Share A plus $20 basis in each of the four other shares) and S1's $250 basis in its asset). S's aggregate inside loss is therefore $230, $250 net inside attribute amount over the $20 value of the S share. Accordingly, S's attribute reduction amount is $200, the lesser of the $200 net stock loss and the $230 aggregate inside loss.

(*2*) *Allocation, apportionment, and application of S's attribute reduction amount.* Under paragraphs (d)(4) and (d)(5)(ii) of this section, S's $200 attribute reduction amount is allocated entirely to the S1 stock (treated as a single share) and then apportioned among the shares in a manner that reduces disparity to the greatest extent possible. Thus, $24 is apportioned to Share A and $44 is apportioned to each of the other shares. Because none of the S1 shares are transferred within the meaning of paragraph (f)(10) of this section (notwithstanding that there is a disposition under §1.1502–19(c)(1)(ii)(B)), the allocated attribute reduction amount apportioned to each of the individual S1 shares is applied fully to reduce the basis of each share to an excess loss account of $24. See paragraph (d)(5)(iii) of this section.

(*3*) *Tier down of S's attribute reduction amount.* Under paragraph (d)(5)(v)(A) of this section, the $200 of S's attribute reduction amount allocated to the S1 shares is an attribute reduction amount of S1 (regardless of the extent, if any, to which it is apportioned and applied to reduce the basis of any shares of S1 stock). Under the general rules of this paragraph (d), S1's $200 tier-down attribute reduction amount is allocated and applied to reduce S1's basis in its asset from $250 to $50.

(*4*) *Basis restoration.* Under paragraph (d)(5)(vi)(A) of this section, after this paragraph (d) has been applied with respect to all transfers of subsidiary stock, any reduction made to the basis of a share of lower-tier subsidiary stock under paragraph (d)(5)(iii) of this section is reversed to the extent necessary to conform the basis of that share to the share's allocable portion of the subsidiary's net inside attribute amount (after reduction). S1's net inside attribute amount after the application of this paragraph (d) is $50 and thus each of the five S1 share's allocable portion of S1's net inside attribute amount is $10. Accordingly, the reductions to the bases of S1 shares under paragraph (d)(5)(iii) of this section are reversed to the extent necessary to restore (to the extent possible) the basis of each share to $10. Thus, $24 of the $24 of reduction to the basis of

Share A is reversed, restoring the basis of Share A to $0, and $34 of the $44 of reduction to the basis of each other share is reversed, restoring the basis of each of those shares to $10.

(ii) *Sale of gain share to member.* (A) *Facts.* The facts are the same as in paragraph (i)(A) of this *Example 6*, except that M owns Shares A, B, C, and D, S owns Share E, S has a liability of $20, and S1's basis in its asset is $500. Also, as part of the transaction, S sells Share E to M for $40. Unlike under the facts of paragraph (i)(A) of this *Example 6*, there is no disposition of Share A within the meaning of § 1.1502–19(c)(1)(ii)(B) (S1 continues to be a member of the group, and thus does not have a separate return year). As a result, the Share A excess loss account is not taken into account. Although S's sale of Share E is a transfer of that share, the share is not a loss share and thus the transfer is not subject to this section. M's sale of the S share, however, is a transfer of a loss share and therefore subject to this section. See paragraphs (f)(10)(i)(A), (f)(10)(i)(B), and (f)(10)(i)(C) of this section.

(B) *Transfer in lowest tier (gain share).* S's sale of Share E is the lowest-tier transfer in the transaction. Under paragraph (a)(3)(ii)(A) of this section, because there are no transfers of loss shares at that tier, no adjustments are required under paragraph (b) or (c) of this section. However, S's gain recognized on the transfer of Share E is computed and immediately adjusts members' bases in subsidiary stock under § 1.1502–32 (because M and S are not members of the same group immediately after the transaction, the sale is not an intercompany transaction subject to § 1.1502–13). Accordingly, M's basis in its S share is increased by $20, from $200 to $220.

(C) *Transfers in next higher tier, application of paragraphs (b) and (c) of this section.* The next higher tier transfer is M's sale of the S stock. The sale is a transfer of a loss share and therefore subject to this section. Although the transfer is subject to this section, there is no basis redetermination under paragraph (b) of this section because there is only one share of S stock outstanding (and so there can be no disparity among members' bases in common shares and there are no outstanding preferred shares with respect to which there can be unrecognized gain or loss). See paragraph (b)(1)(ii)(A) of this section. Therefore, after the application of paragraph (b) of this section, the share is still a loss share and, as such, subject to paragraph (c) of this section. Under paragraph (c) of this section, M's basis in its S share is decreased by $20, the lesser of S's $200 disconformity amount (computed as the excess of M's $220 basis in the S stock over S's $20 net inside attribute amount (computed as the $20 basis in Share E, increased by $20 to reflect the gain recognized with respect to the share, less the $20 liability)), and the $20 net positive adjustment. Thus, after the application of paragraph (c) of this section, M's basis in the S share is $200, and the sale remains a transfer of a loss share. There are no higher tier transfers and, therefore, M's transfer of the S share is then subject to this paragraph (d).

(D) *Attribute reduction under this paragraph (d).* (*1*) *Computation of attribute reduction amount.* Under paragraph (d)(3) of this section, S's attribute reduction amount is the lesser of M's net stock loss and S's aggregate inside loss. M's net stock loss is $180 ($200 basis over $20 value). S's aggregate inside loss is the excess of S's net inside attribute amount over the value of the S share. Under paragraphs (d)(3)(iii)(B) and (d)(5)(i)(B) of this section, S's net inside attribute amount is $80, computed as $100 (S's deemed basis in Share E (the greater of $40 (S's $20 basis in Share E, adjusted for the $20 gain recognized with respect to the share), and Share E's allocable portion of S1's net inside attribute amount of $100 (1/5 of S1's $500 basis in its asset)), less S's $20 liability. Accordingly, S's aggregate inside loss is $60 ($80 net inside attribute amount over the $20 value of the S stock). S's attribute reduction amount is therefore $60, the lesser of $180 net stock loss and $60 aggregate inside loss.

(*2*) *Allocation, apportionment, and application of S's attribute reduction amount.* Under paragraphs (d)(4) and (d)(5)(ii) of this section, S's $60 attribute reduction amount is allocated entirely to its S1 stock, Share E. However, because Share E was transferred within the meaning of paragraph (f)(10) of this section and gain was recognized on its transfer, none of the allocated amount is apportioned to, or applied to reduce the basis of Share E. See paragraph (d)(5)(iii)(A) of this section. Under paragraph (d)(5)(iv) of this section, the $60 allocated attribute reduction amount not apportioned or applied to Share E has no effect on S or S's attributes.

(*3*) *Tier down of S's attribute reduction amount.* Notwithstanding the fact that no portion of the allocated attribute reduction amount was apportioned to or applied to reduce the basis of Share E, the entire $60 allocated attribute reduction amount is an attribute reduction amount of S1. See paragraph (d)(5)(v)(A) of this section. Under the general rules of this paragraph (d), S1's $60 tier-down attribute reduction amount is allocated and applied to reduce S1's basis in its asset from $500 to $440.

(*4*) *Basis restoration.* Under paragraph (d)(5)(vi)(A) of this section, after this paragraph (d) has been applied with respect to all transfers of subsidiary stock, any reduction made to the basis of a share of subsidiary stock under paragraph (d)(5)(iii) of this section is reversed to the extent necessary to conform the basis of that share to the share's allocable portion of the subsidiary's net inside attribute amount. No reduction was

made to the basis of the S1 stock under paragraph (d)(5)(iii) of this section. Therefore, no stock basis is increased under the basis restoration rule in paragraph (d)(5)(vi)(A) of this section.

Example 7. Allocation of attribute reduction if lower-tier subsidiary has non-loss assets or liabilities. (i) *S1 holds cash.* (A) *Facts.* M owns the sole outstanding share of S stock with a basis of $800. S owns Asset with a basis of $400 and the sole outstanding share of S1 stock with a basis of $300. S1 holds Asset 1 with a basis of $50, and $100 cash. M sells its S share to P1, the common parent of a consolidated group, for $100. The sale is not a transfer of the S1 share because S and S1 are members of the same group following the transaction. However, the sale is a transfer of the S share, a loss share, and therefore subject to this section. See paragraphs (f)(10)(i)(A), (f)(10)(i)(B), and (f)(10)(i)(C) of this section.

(B) *Application of paragraphs (b) and (c) of this section.* Although the transfer is subject to this section, there is no basis redetermination under paragraph (b) of this section because there is only one share of S stock outstanding (and so there can be no disparity among members' bases in common shares and there are no outstanding preferred shares with respect to which there can be unrecognized gain or loss). See paragraph (b)(1)(ii)(A) of this section. Therefore, after the application of paragraph (b) of this section, the share is still a loss share and, as such, subject to the provisions of this paragraph (c). No adjustment is required under paragraph (c) of this section because, even though there is a disconformity amount of $100, the net positive adjustment is $0. See paragraph (c)(3) of this section. Thus, after the application of paragraph (c) of this section, M's sale of the S share is still a transfer of a loss share and, accordingly, subject to this paragraph (d).

(C) *Attribute reduction under this paragraph (d).* (*1*) *Computation of attribute reduction amount.* Under paragraph (d)(3) of this section, S's attribute reduction amount is the lesser of M's net stock loss and S's aggregate inside loss. M's net stock loss is $700 ($800 basis over $100 value). S's aggregate inside loss is the excess of S's net inside attribute amount over the value of the S share. Under paragraphs (d)(3)(iii)(B) and (d)(5)(i)(B) of this section, S's net inside attribute amount is $700, the sum of its $400 basis in Asset and its $300 deemed basis in the S1 share (computed as the greater of S's $300 basis in the S1 share and S1's $150 net inside attribute amount (reflecting the sum of S1's $50 basis in Asset 1 and S1's $100 cash)). Therefore, S's aggregate inside loss is $600 ($700 net inside attribute amount over the $100 value of the S stock). S's attribute reduction amount is $600, the lesser of the $700 net stock loss and the $600 aggregate inside loss.

(*2*) *Allocation, apportionment, and application of S's attribute reduction amount.* Under paragraphs (d)(4) and (d)(5)(ii) of this section, S's $600 attribute reduction amount is allocated proportionately (by basis) between S's $400 basis in Asset (non-stock Category D asset) and its deemed basis in the S1 share. However, under paragraph (d)(5)(ii) of this section, for purposes of allocating the attribute reduction amount, S's $300 deemed basis in the S1 share is treated as reduced by S1's net non-loss assets (its Class I asset, $100 cash) to $200. Thus, the $600 is allocated $400 to Asset ($400/$600 × $600) and $200 to the S1 share ($200/$600 × $600). The $400 allocated to Asset is applied to reduce S's basis in Asset from $400 to $0. Because the S1 share is not transferred within the meaning of paragraph (f)(10) of this section, the allocated attribute reduction amount apportioned to the S1 share is applied fully to reduce the basis of the S1 share to $100. See paragraph (d)(5)(iii) of this section.

(*3*) *Tier down of S's attribute reduction amount.* Under paragraph (d)(5)(v)(A) of this section, the $200 portion of S's attribute reduction amount allocated to the S1 stock is an attribute reduction amount of S1 (regardless of the extent, if any, to which it is apportioned and applied to reduce the basis of any shares of S1 stock). Under the general rules of this paragraph (d), S1's $200 tier-down attribute reduction amount is allocated and applied to reduce S1's basis in Asset 1 (S1's only attribute available for reduction) from $50 to $0. The $150 unapplied attribute reduction amount is disregarded and has no further effect.

(*4*) *Basis restoration.* Under paragraph (d)(5)(vi)(A) of this section, after this paragraph (d) has been applied with respect to all transfers of subsidiary stock, any reduction made to the basis of a share of subsidiary stock under paragraph (d)(5)(iii) of this section is reversed to the extent necessary to conform the basis of that share to the share's allocable portion of the subsidiary's net inside attribute amount. There is only one share of S1 stock outstanding and so S1's entire $100 net inside attribute amount is allocable to that share. Because S's $100 basis in the S1 share (as reduced under this paragraph (d)) is already conformed with its $100 allocable portion of S1's net inside attribute amount, there is no restoration under paragraph (d)(5)(vi)(A) of this section.

(ii) *S1 borrows cash.* The facts are the same as in paragraph (i)(A) of this *Example 7* except that, in addition, S1 borrows $50 from X immediately before M sells the S share. The computation of the attribute reduction amount is the same as in paragraph (i)(C) of this *Example 7* (the $50 cash from the loan proceeds and the $50 liability offset in the computation of S1's net inside attribute amount and so the net amount is unaffected, and the computation of S's deemed basis in

the S1 stock is unaffected). Similarly, for purposes of allocating the attribute reduction amount between the non-stock Category D asset and the S1 stock, paragraph (d)(5)(ii) of this section requires S's deemed basis in the S1 share to be treated as reduced by S1's net non-loss assets (S1's non-loss assets over S1's liabilities). Accordingly, the additional $50 cash proceeds is offset by the $50 liability and there is no effect on the allocation of the attribute reduction amount. The results are the same as in paragraph (i) of this *Example 7*.

(iii) *S1 has a liability not taken into account for tax purposes*. (A) *Facts*. The facts are the same as in paragraph (ii) of this *Example 7* except that, in addition, S1 has a $40 liability that is not taken into account for tax purposes as of the transfer and that would be required to be capitalized if a person purchased S1's assets and assumed the liability.

(B) *Application of paragraphs (b) and (c) of this section*. No adjustment is required under paragraph (b) or paragraph (c) of this section for the reasons set forth in paragraph (i)(B) of this *Example 7*. Thus, after the application of paragraph (c) of this section, P's sale of the S share is still a transfer of a loss share and, accordingly, subject to this paragraph (d).

(C) *Attribute reduction under this paragraph (d)*. (*1*) *Computation of attribute reduction amount*. The attribute reduction amount is the same as computed in paragraph (i)(C)(*1*) of this *Example 7* (under paragraph (f)(5) of this section, the term liability does not include liabilities not taken into account for tax purposes and so the additional $40 liability not yet taken into account for tax purposes does not affect the computation of S's attribute reduction amount).

(*2*) *Allocation, apportionment, and application of S's attribute reduction amount*. Under paragraphs (d)(4) and (d)(5)(ii) of this section, S's $600 attribute reduction amount is allocated proportionately (by basis) between S's $400 basis in Asset 1 (non-stock Category D asset) and its deemed basis in the S1 share. However, under paragraph (d)(5)(ii) of this section, for purposes of allocating the attribute reduction amount, S's $300 deemed basis in the S1 share is treated as reduced by S1's net non-loss assets (S1's non-loss assets over S1's liabilities). For this purpose, the term liabilities includes liabilities not taken into account for tax purposes, as described in paragraph (d)(4)(ii)(C)(*1*) of this section (generally, liabilities that, if assumed in a purchase, would give rise to a capitalized amount when satisfied). Thus, for this purpose, S's $300 deemed basis in the S1 share is reduced by S1's $60 net non-loss assets (the excess of S1's $150 non-loss assets (its Class I asset, $150 cash) over S1's $90 liabilities ($50 loan and $40 liability not yet taken into account for tax purposes)), to $240. Accordingly, S's $600 attribute reduction amount is allocated and applied $375 ($400/$640 × $600) to Asset (reducing S's basis in Asset from $400 to $25) and $225 ($240/$640 × $600) to the S1 share. Because the S1 share is not transferred within the meaning of paragraph (f)(10) of this section, the allocated attribute reduction amount apportioned to the S1 share is applied fully to reduce the basis of the S1 share to $75. See paragraph (d)(5)(iii) of this section.

(*3*) *Tier down of S's attribute reduction amount, application of conforming limitation*. Under paragraph (d)(5)(v)(A) of this section, the $225 portion of S's attribute reduction amount allocated to the S1 stock is an attribute reduction amount of S1 (regardless of the extent, if any, to which it is apportioned and applied to reduce the basis of any shares of S1 stock). Under the general rules of this paragraph (d), S1's $225 tier-down attribute reduction amount would be allocated and applied to reduce S1's attributes. However, under paragraph (d)(5)(v)(B) of this section, S1's attributes can be reduced by only $75, the excess of the $150 portion of S1's net inside attribute amount that is allocable to all S1 shares held by members as of the transaction over $75, the aggregate amount of members' bases in nontransferred S1 shares, after reduction under this paragraph (d). Thus, of S1's $225 tier-down attribute reduction amount, $50 is applied to reduce S1's basis in Asset 1, from $50 to $0. Although the $25 unapplied attribute reduction amount not subject to the conforming limitation would generally be disregarded without further effect, because S1 has a $40 liability not taken into account for tax purposes, paragraph (d)(4)(ii)(C)(*1*) of this section requires that the $25 of the unapplied attribute reduction amount not subject to the conforming limitation be suspended and then allocated and applied to reduce any amounts that become deductible or capitalizable as a result of that liability later being taken into account. If the liability is satisfied for an amount that is less than $25, under paragraph (d)(4)(ii)(C)(*2*) of this section the remaining portion of that $25 suspended attribute reduction amount is disregarded and has no further effect. The $150 unapplied portion of the tier-down attribute reduction amount subject to the conforming limitation has no further effect.

(*4*) *Basis restoration*. Under paragraph (d)(5)(vi)(A) of this section, after this paragraph (d) has been applied with respect to all transfers of subsidiary stock, any reduction made to the basis of a share of lower-tier subsidiary stock under paragraph (d)(5)(iii) of this section is reversed to the extent necessary to conform the basis of that share to the share's allocable portion of the subsidiary's net inside attribute amount. Paragraph (d)(5)(vi)(A) provides that, for this purpose, S1's net inside attribute amount is its net inside attribute amount, taking into account

any reductions under this paragraph (d) and treating it as reduced by any attribute reduction amount suspended under paragraph (d)(4)(ii)(C)(*1*) of this section. Because S's $75 basis in its S1 stock (after application of this paragraph (d)) is already conformed with its $75 allocable portion of S1's net inside attribute amount ($100 net inside attributes after reduction, reduced by S1's $25 suspended attribute reduction amount), there is no restoration under paragraph (d)(5)(vi)(A) of this section.

Example 8. Election to reduce stock basis or reattribute attributes under paragraph (d)(6) of this section. (i) *Deconsolidating sale.* (A) *Facts.* P owns the sole outstanding share of M stock with a basis of $1,000. M owns all 100 outstanding shares of S stock with a basis of $2.10 per share ($210 total). M sells all its S shares to X for $1 per share ($100 total). M's sale of the S shares is a transfer of loss shares and therefore subject to this section. See paragraphs (f)(10)(i)(A), (f)(10)(i)(B), and (f)(10)(i)(C) of this section. At the time of the sale, S has no liabilities and the following:

Category	Attribute	Attribute amount
Category A	Capital loss carryover	$10
Category B	NOL carryover	90
Category C	Deferred deduction	40
Total Category A, Category B, and Category C Attributes	140.	
Category D, Class V	Basis in land	70
Total Attributes	210.	

(B) *Application of paragraphs (b) and (c) of this section.* Although the transfer is subject to this section, there is no basis redetermination under paragraph (b) of this section because there is no disparity among M's bases in shares of S common stock and there are no shares of S preferred stock outstanding (so there can be no unrecognized gain or loss with respect to preferred shares). See paragraph (b)(1)(ii)(A) of this section. No adjustment is required under paragraph (c) of this section because both the disconformity amount and the net positive adjustment are $0. See paragraph (c)(3) of this section. Thus, after the application of paragraph (c) of this section, M's transfer of the S shares is still a transfer of loss shares and, accordingly, subject to this paragraph (d).

(C) *Attribute reduction under this paragraph (d).* (*1*) *Computation of attribute reduction amount.* Under paragraph (d)(3) of this section, S's attribute reduction amount is the lesser of the $110 net stock loss ($210 aggregate basis over the $100 aggregate value) and S's aggregate inside loss. S's aggregate inside loss is $110 (S's $210 net inside attribute amount (the $10 capital loss carryover, plus the $90 NOL carryover, plus the $40 deferred deduction, plus the $70 basis in the land) over the $100 value of all outstanding S shares). S's attribute reduction amount is $110, the lesser of the $110 net stock loss and the $110 aggregate inside loss.

(*2*) *Application of attribute reduction amount.* (*i*) S's $110 attribute reduction amount is applied as follows:

Category	Attribute	Attribute amount	Allocation of attribute reduction amount	Adjusted attribute amount
Category A	Capital loss carryover	$10	$10	$0
Category B	NOL carryover	90	90	0
Category C	Deferred deduction	40	10	30
Category D, Class V	Basis in land	70	0	70
Totals	210	110	100	

(*ii*) Alternatively, under paragraph (d)(4)(ii)(A)(*1*) of this section, P could specify the allocation of S's $110 attribute reduction amount among S's $10 capital loss carryover, S's $90 NOL carryover, and S's $40 deferred deduction.

(D) *Results.* The P group recognizes a $110 loss on M's sale of the S shares that is absorbed by the group, which reduces P's basis in the M share under § 1.1502–32 from $1,000 to $890. Immediately after the transaction, the entities own the following:

Entity	Asset	Basis
P	M share	$890
X	100 S shares	100
S	Category C, deferred deduction	30
	Category D, Class V Asset (land)	70

(E) *Election to reduce stock basis.* The facts are the same as in paragraph (i)(A) of this *Example 8* except that P elects under paragraph (d)(6) of this section to reduce M's basis in the S shares by the full attribute reduction amount of $110, in lieu of S reducing its attributes. The election is effective for all transferred loss shares and is allocated to those shares in proportion to the loss in each. See paragraph (d)(6)(v)(A) of this section. Accordingly, the basis of each of the 100 transferred shares is reduced from $2.10 to $1.00. After giving effect to the election, the S shares are not loss shares and this section has no further application to the transfer. The $110 reduction in M's basis in the S shares pursuant to the election under paragraph (d)(6) of this section is a noncapital, nondeductible expense of M that will reduce P's basis in the M share. See paragraph (d)(6)(v)(A) of this section. Immediately after the transaction, the entities own the following:

Entity	Asset	Basis/ attribute
P	M share	$890
X	100 S shares	100
S	Category A, capital loss carryover	10
	Category B, NOL carryover	90
	Category C, deferred deduction	40
	Category D, Class V Asset (land)	70

(F) *Election to reattribute losses.* The facts are the same as in paragraph (i)(A) of this *Example 8* except that P elects under paragraph (d)(6) of this section to reattribute S's attributes. S's attribute reduction amount is $110, and P can reattribute all or any portion of the attributes in Category A, Category B, and Category C to the extent of $110. P elects to reattribute the $90 NOL, and, as a result, S's NOL is $0. Under paragraph (d)(6)(iv)(A) of this section, the reattribution of the $90 NOL is a noncapital, nondeductible expense of S. Under § 1.1502–32(c)(1)(ii)(A)(*1*) this $90 expense is allocated to the transferred loss shares of S stock in proportion to the loss in the shares, or $.90 per share. Further, this expense tiers up under § 1.1502–32 and reduces P's basis in the M stock by $90. After giving effect to the election, the P group would recognize a $20 loss on M's sale of the S shares, S would have an aggregate inside loss of $20 (S's $120 net inside attribute amount (the $10 capital loss carryover, plus the $40 deferred deduction, plus the $70 basis in the land) over the $100 value of all outstanding S shares), and S's attribute reduction amount would be $20 (applied $10 to the $10 capital loss carryover and $10 to the $40 deferred deduction). (Alternatively, under paragraph (d)(4)(ii)(A)(*1*) of this section, P could specify the allocation of S's $20 attribute reduction amount between S's $10 capital loss carryover and S's $40 deferred deduction. Further, P could elect to reduce M's remaining basis in the S shares by any amount up to the $20 attribute reduction amount, thereby reducing or eliminating S's attribute reduction amount.)

(ii) *Nondeconsolidating sale.* (A) *Facts.* The facts are the same as in paragraph (i)(A) of this *Example 8*, except that M only sells 20 S shares ($20 total).

(B) *Application of paragraphs (b) and (c) of this section.* No adjustment is required under paragraph (b) or paragraph (c) of this section for the reasons set forth in paragraph (i)(B) of this *Example 8*. Thus, after the application of paragraph (c) of this section, M's sale of the S shares is still a transfer of loss shares and, accordingly, subject to this paragraph (d).

(C) *Attribute reduction under this paragraph (d).* (*1*) *Computation of attribute reduction amount.* Under paragraph (d)(3) of this section, S's attribute reduction amount is the lesser of the $22 net stock loss ($42 aggregate basis over $20 aggregate value) and S's $110 aggregate inside loss (as calculated in paragraph (i)(C)(*1*) of this *Example 8*). S's attribute reduction amount is $22, the lesser of the $22 net stock loss and the $110 aggregate inside loss.

(*2*) *Application of attribute reduction amount.* (*i*) S's $22 attribute reduction amount is applied as follows:

Category	Attribute	Attribute amount	Allocation of attribute reduction amount	Adjusted attribute amount
Category A	Capital loss carryover	$10	$10	$0
Category B	NOL carryover	90	12	78
Category C	Deferred deduction	40	0	40
Category D, Class V	Land	70	0	70

(*ii*) Alternatively, under paragraph (d)(4)(ii)(A)(*1*) of this section, P could specify the allocation of S's $22 attribute reduction amount among S's $10 capital loss carryover, S's $90 NOL carryover, and S's $40 deferred deduction.

(D) *Results.* The P group recognizes a $22 loss on M's sale of the S shares that is absorbed by the group, which reduces P's basis in the M share under § 1.1502–32 from $1,000 to $978. Immediately after the transaction, the entities have the following:

Entity	Asset	Basis
P	M share	$978
X	20 S shares	20
S	Category B, NOL carryover	78
	Category C, deferred deduction	40
	Category D, Class V Asset (land)	70

(E) *Election to reduce stock basis.* The facts are the same as in paragraph (ii)(A) of this *Example 8*, except that P elects under paragraph (d)(6) of this section to reduce M's basis in the S shares by the full attribute reduction amount of $22, in lieu of S reducing its attributes. The election is effective for all transferred loss shares and is allocated to such shares in proportion to the loss in each share. See paragraph (d)(6)(v)(A) of this section. Accordingly, the basis of each of the 20 transferred shares is reduced from $2.10 to $1.00. After giving effect to the election, the transferred S shares are not loss shares and this section has no further application to the transfer. The $22 reduction in M's basis in the S shares pursuant to the election under paragraph (d)(6) of this section is a noncapital, nondeductible expense of M that will reduce P's basis in the M share. See paragraph (d)(6)(v)(A) of this section. Immediately after the transaction, the entities have the following:

Entity	Asset	Basis/ attribute
P	M share	$978
M	80 S shares	168
X	20 S shares	20
S	Category A, capital loss carryover	10
	Category B, NOL	90
	Category C, deferred deduction	40
	Category D Class V Asset (land)	70

(F) *Election to reattribute attributes.* The facts are the same as in paragraph (ii)(A) of this *Example 8*. Because S remains a member of the same group as P following M's sale of S stock, P cannot elect under paragraph (d)(6) of this section to reattribute any portion of S's attributes in lieu of attribute reduction.

Example 9. Transfers at multiple tiers, gain and loss shares. (i) *Facts.* M owns the sole outstanding share of S stock with a basis of $700. S owns Asset 1 (basis of $170) and all ten outstanding shares of S1 common stock ($170 basis in share 1, $10 basis in share 2, and $15 basis in each of share 3 through share 10). S1 owns the sole outstanding share of S2 ($0 basis), the sole outstanding share of S3 ($60 basis), and the sole outstanding share of S4 ($100 basis). S2's sole asset is Asset 2 ($75 basis). S3's sole asset is Asset 3 ($75 basis). S4's sole asset is Asset 4 ($80 basis). In one transaction, M sells its S share to P1 (the common parent of a consolidated group) for $240, S sells S1 share 1 to X for $20, S contributes S1 share 2 to a partnership in a section 721 transaction, and S1 sells its S2 share to Y for $50. M's sale of the S share and S1's sale of the S2 share are transfers under paragraphs (f)(10)(i)(A), (f)(10)(i)(B), and (f)(10)(i)(C) of this section. S's sale of S1 share 1 to X is a transfer under paragraphs (f)(10)(i)(A) and (f)(10)(i)(C) of this section. S's contribution of S1 share 2 to the partnership is a transfer under paragraph (f)(10)(i)(C) of this section.

(ii) *Transfer in lowest tier (gain share).* However, S1's gain recognized on the transfer of the S2 share is computed and immediately adjusts members' bases in subsidiary stock under §1.1502–32. Under paragraph (a)(3)(ii)(A) of this section, because there are no transfers of loss shares at that tier, no adjustments are required under paragraph (b) or (c) of this section. However, S1's gain recognized on the transfer of the S2 share is computed and immediately adjusts members bases in subsidiary stock under §1.1502–32. Accordingly, $5 is allocated to each of 10 S1 shares, increasing the basis of share 1 to $175, the basis of share 2 to $15, and the basis of each other share to $20. The $50 applied to S's bases in the S1 shares then tiers up to increase P's basis in the S share from $700 to $750.

(iii) *Transfers in next highest tier (loss share).* S's sale of the S1 share 1 and S's transfer of the S1 share 2 to a partnership are both transfers of stock in the next higher tier. However, only the S1 share 1 is a loss share and so this section only applies with respect to the transfer of that share.

(A) *Basis redetermination under paragraph (b) of this section.* Under paragraph (b)(2)(i)(A) of this section, members' bases in S1 shares are redetermined by first removing the positive investment adjustments applied to the bases of transferred loss common shares. Accordingly, the $5 positive investment adjustment applied to the basis of S1 share 1 is removed, reducing the basis of S1 share 1 from $175 to $170. Because there were no negative adjustments applied to the bases of S1 shares, there are no negative adjustments that can be reallocated to further reduce the basis of S1 share 1 under paragraph (b)(2)(i)(B) of this section. Finally, under paragraph (b)(2)(ii)(B) of this section, the $5 positive investment adjustment removed from S1 share 1 is reallocated and applied to increase the bases of other S1 common shares in a manner that reduces disparity to the greatest extent possible. Accordingly, the entire $5 investment adjustment removed from S1 share 1 is reallocated and applied to increase the basis of S1 share 2, from $15 to $20. After basis is redetermined under paragraph (b) of this section, the S1 share 1 is still a loss share and therefore subject to basis reduction under paragraph (c) of this section. (Because the S1 share 2 is not a loss share, this section does not apply with respect to the transfer of that share.)

(B) *Basis reduction under paragraph (c) of this section.* No adjustment is required to the basis of S1 share 1 under paragraph (c) of this section. The S1 share 1 has a disconformity amount of $149. This $149 disconformity amount is computed as the excess of the $170 basis in the S1 share 1 over the S1 share 1's $21 allocable portion (1/10) of S1's $210 net inside attribute amount. S1's $210 net inside attribute amount is determined under paragraph (c)(5) of this section as the sum of $50 (S1's $0 basis in the S2 share, adjusted for the $50 gain recognized with respect to that share), S1's $60 basis in the S3 stock, and S1's $100 basis in the S4 stock. (In computing the disconformity amount, the basis of the S2 share is not treated as tentatively reduced because that share is transferred in the transaction, and the bases of the S3 and S4 shares are not treated as tentatively reduced because no positive investment adjustments were applied to the bases of those shares.) However, the S1 share 1's net positive adjustment is $0 because the $5 positive investment adjustment originally allocated to S1 share 1 was reallocated to S1 share 2 under paragraph (b) of this section. See paragraph (c)(3) of this section. No adjustment is required to the basis of S1 share 2 under paragraph (c) of this section because S1 share 2 is not a loss share.

(C) *Computation of loss, adjustments to stock basis.* S recognizes a loss of $150 on the sale of the S1 share 1 ($170 basis over $20 amount realized) that is absorbed by the group. Under § 1.1502–32, M's basis in its S share is therefore decreased by $100, the net of the $150 loss recognized by S on the sale of the S1 share, and the $50 gain that tiered up from S1 (as a result of S1's sale of the S2 share). Following these adjustments, M's basis in the S share is $600 and the sale of the S share is still a transfer of a loss share.

(iv) *Transfer in highest tier (loss share).* The sale of the S share is a transfer in the next higher tier, which is the highest tier in this transaction. Because the sale is a transfer of a loss share, it is subject to this section.

(A) *Basis redetermination and basis reduction under paragraphs (b) and (c) of this section.* Although the transfer is subject to this section, there is no basis redetermination under paragraph (b) of this section because there is only one share of S stock outstanding (and so there can be no disparity among members' bases in common shares and there are no outstanding preferred shares with respect to which there can be unrecognized gain or loss). See paragraph (b)(1)(ii)(A) of this section. Therefore, after the application of paragraph (b) of this section, the share is still a loss share and, as such, subject to paragraph (c) of this section. In addition, no adjustment is required under paragraph (c) of this section. The S share has a disconformity amount of $230. This $230 disconformity amount is computed as the excess of the $600 basis in the S share over the S share's $370 allocable portion (1/1) of S's $370 net inside attribute amount. S's $370 net inside attribute amount is determined under paragraph (c)(5) of this section as the sum of $200 (S's $170 basis in the S1 share 1, adjusted for the $150 loss recognized with respect to that share, and S's $20 basis in each of S1 share 2 through share 10), and S's $170 basis in Asset 1. (In computing the disconformity amount, the bases of S1 share 1 and share 2 are not treated as tentatively reduced because those shares are transferred in the transaction, and the bases of S1 share 3 through share 10 are not treated as tentatively reduced because none of those shares have a disconformity amount—each share has a basis of $20 and a $21 allocable portion (1/10) of S1's $210 net inside attribute amount, as determined in paragraph (iii)(B) of this *Example 9.*) However, the S share's net positive adjustment is $0 (the S share's net adjustment is negative $100). See paragraph (c)(3) of this section. Accordingly, the sale of the S share is still a transfer of a loss share. Because there are no higher-tier loss shares transferred in the transaction, this paragraph (d) then applies with respect to the transfer of the S share.

(B) *Attribute reduction under this paragraph (d).* (*1*) *Computation of S's attribute reduction amount.* Under paragraph (d)(3) of this section, S's attribute reduction amount is the lesser of P's net stock loss and S's aggregate inside loss. P's net stock loss is $360 ($600 basis over $240 amount realized). S's aggregate inside loss is the excess of S's net inside attribute amount over the value of the S share. S's net inside attribute amount is the sum of its bases in its assets, treating its S1 shares as a single share (the S1 stock) and treating S's deemed basis in the S1 stock as its basis in that stock. Under paragraph (d)(5)(i)(C) of this section, when subsidiaries are owned in multiple tiers, deemed basis is first determined for shares at the lowest tier, and then for stock in each next higher tier. Under paragraph (d)(5)(i)(B) of this section, S1's deemed basis in the S2 stock is $75 (computed as the greater of $50 (S1's $0 basis in the S2 share, adjusted for the $50 gain recognized with respect to the share) and $75 (S2's net inside attribute amount, the basis in Asset 2)). S1's deemed basis in the S3 stock is $75 (computed as the greater of $60 (S1's basis in the S3 share) and $75 (S3's net inside attribute amount, the basis in Asset 3)). S1's deemed basis in the S4 stock is $100 (computed as the greater of $100 (S1's basis in the S4 share) and $80 (S4's net inside attribute amount, the basis in Asset 4)). Accordingly, S1's net inside attribute amount is $250 ($75 deemed basis in the S2 stock plus $75 deemed basis in the S3 stock plus $100 deemed basis in the S4 stock). S's deemed basis in the S1 stock is the greater of the sum of S's actual basis in each share of S1 stock (adjusted for

any gain or loss recognized) and S1's net inside attribute amount. S's actual basis in the S1 stock, adjusted for the loss recognized, is $200 (the sum of S's $170 basis in the S1 share 1, adjusted by the $150 loss recognized with respect to the share, and S's $20 basis in each of S1 share 2 through share 10). Thus, S's deemed basis in the S1 stock is $250, the greater of $200 (aggregate basis in S1 shares, adjusted for loss recognized) and $250 (S1's net inside attribute amount). As a result, S's net inside attribute amount is $420, the sum of S's $250 deemed basis in the S1 stock and S's $170 basis in Asset 1. Accordingly, the aggregate inside loss is $180, the excess of S's $420 net inside attribute amount over the $240 value of all of the S stock. S's attribute reduction amount is therefore $180, the lesser of the $360 net stock loss and the $180 aggregate inside loss.

(*2*) *Allocation, apportionment, and application of S's attribute reduction amount.* Under paragraphs (d)(4) and (d)(5)(ii) of this section, S's $180 attribute reduction amount is allocated proportionately (by basis) between Asset 1 (non-stock Category D asset) and the S1 stock. However, under paragraph (d)(5)(ii) of this section, for purposes of allocating S's $180 attribute reduction amount between S's non-stock Category D asset and the S1 stock, S's $250 deemed basis in the S1 stock is reduced by the $40 value of the transferred S1 shares (S1 share 1 and share 2) and the non-transferred S1 shares' $40 allocable portion (8/10) of S1's $50 net non-loss assets. S1's net non-loss assets is the $50 value of S1's transferred S2 shares. (S1 has no other non-loss assets, and there are no non-loss assets held by lower-tier subsidiaries.) Accordingly, for this purpose, S's deemed basis in the S1 stock is reduced by $80, from $250 to $170. Thus, $90 of the attribute reduction amount ($170/$340 × $180) is allocated to Asset 1 (reducing S's basis in Asset 1 from $170 to $80) and $90 of the attribute reduction amount ($170/$340 × $180) is allocated to the S1 stock. Under paragraph (d)(5)(iii)(A) of this section, none of the $90 allocated attribute reduction amount is apportioned to S1 share 1 because loss is recognized on the transfer of S1 share 1. Under paragraph (d)(5)(iii)(B) of this section, the $90 allocated attribute reduction amount is apportioned among the other nine shares of S1 common stock in a manner that reduces disparity to the greatest extent possible. Accordingly, of the total $90 allocated amount, $10 is apportioned to each of the remaining nine shares of S1 stock. Under paragraph (d)(5)(iii)(C) of this section, the allocated attribute reduction amount apportioned to an individual share cannot be applied to reduce the basis of the share below its value if the share is transferred other than in a recognition transfer. Because the S1 share 2 is transferred (contributed to the partnership) and the basis of S1 share 2 is already equal to its value, none of the $10 allocated attribute reduction amount apportioned to S1 share 2 is applied to reduce its basis. Because none of S1 share 3 through share 10 are transferred within the meaning of paragraph (f)(10) of this section, the $10 allocated attribute reduction amount apportioned to each of S1 share 3 through share 10 is applied fully to reduce the basis of each of those shares from $20 to $10. As a result, immediately after the allocation and application of S's attribute reduction amount, S's basis in Asset 1 is $80 ($170 minus $90), its bases in S1 share 1 and share 2 are not adjusted under paragraph (d)(5)(iii), and its basis in each of S1 share 3 through share 10 is $10. Under paragraph (d)(5)(v)(A) of this section, the entire $90 of S's attribute reduction amount that was allocated to the S1 stock is an attribute reduction amount of S1, regardless of the fact that none of the allocated amount was apportioned to S1 share 1 and none of the amount apportioned to S1 share 2 was applied to reduce the basis of S1 share 2.

(v) *Attribute reduction under this paragraph (d) in next lower tier. (A) Computation of S1's attribute reduction amount.* S's sale of S1 share 1 is a transfer of a loss share and it is in the next lower tier. Thus, this paragraph (d) next applies with respect to S's transfer of S1 share 1. S1's attribute reduction amount will include both the $90 attribute reduction amount that tiered down from S and any attribute reduction amount resulting from the application of this paragraph (d) with respect to S's transfer of S1 share 1 and share 2 (S1's direct attribute reduction amount). Under paragraph (d)(3) of this section, S1's direct attribute reduction amount is the lesser of the net stock loss on transferred S1 shares and S1's aggregate inside loss. The net stock loss on transferred S1 shares is $150, computed as the excess of S's $190 adjusted bases in transferred shares of S1 stock ($170 in S1 share 1 plus $20 in S1 share 2) over the $40 aggregate value of those shares. S1's aggregate inside loss is $50, the excess of S1's $250 net inside attribute amount (as calculated in paragraph (iv)(B)(*1*) of this *Example 9*) over the $200 value of all outstanding S1 shares. Therefore, S1's direct attribute reduction amount is $50, the lesser of the $150 net stock loss and S1's $50 aggregate inside loss. S1's total attribute reduction amount is thus $140, the sum of the $90 tier-down attribute reduction amount and the $50 direct attribute reduction amount.

(B) *Allocation, apportionment, and application of S1's attribute reduction amount.* Under paragraphs (d)(4) and (d)(5)(ii) of this section, S1's $140 attribute reduction amount is allocated proportionately (by basis) among the S2 stock, the S3 stock, and the S4 stock. However, under paragraph (d)(5)(ii) of this section, for purposes of allocating S1's $140 attribute reduction amount among S1's lower-tier subsidiary stock, S1's $75 deemed

basis in the S2 stock is reduced by the $50 value of the transferred S2 share. Accordingly, for this purpose, S1's deemed basis in the S2 stock is reduced by $50, from $75 to $25. Thus, $17.50 of S1's attribute reduction amount ($25/$200 × $140) is allocated to the S2 stock, $52.50 of S1's attribute reduction amount ($75/$200 × $140) is allocated to the S3 stock, and $70 of S1's attribute reduction amount ($100/$200 × $140) is allocated to the S4 stock. Under paragraph (d)(5)(iii)(A) of this section, none of the $17.50 of S1's attribute reduction amount allocated to S2 stock is apportioned to the S2 share because gain was recognized on the transfer of the S2 share. Because neither the S3 share nor the S4 share is transferred within the meaning of paragraph (f)(10) of this section, the $52.50 of S1's attribute reduction amount allocated to the S3 stock, and the $70 of S1's attribute reduction amount allocated to the S4 stock, is apportioned to and applied fully to reduce the basis of such shares. Thus, S1's basis in the S3 share is reduced by $52.50, from $60 to $7.50, and S1's basis in the S4 stock is reduced by $70, from $100 to $30. (Note: The conforming limitation in paragraph (d)(5)(v)(B) of this section limits the application of the $90 tier down attribute reduction amount to $80, the amount by which the portion (10/10) S1's $250 net inside attribute amount attributable to S1 shares held by members exceeds $170 (the sum of the $50 direct attribute reduction amount, the $20 value of the S1 share 1 transferred in a recognition transfer, the $20 basis (after reduction) in the S1 share 2 transferred other than in a recognition transfer, and the $80 aggregate basis (after reduction) in the nontransferred S1 shares held by members). However, the conforming limitation does not limit the application of S1's $90 tier-down attribute reduction amount because none of the $17.50 of S1's total attribute reduction amount allocated to the S2 share was applied to reduce the basis of the share. Accordingly, only $78.75 ($90—($17.50 × ($90/$140)) of the $90 tier-down attribute reduction was applied to reduce S1's attributes.) Under paragraph (d)(5)(v)(A) of this section, the attribute reduction amount allocated to the S2 stock, the S3 stock, and the S4 stock becomes an attribute reduction amount of S2, S3, and S4, respectively (even though the amount allocated to S2 stock was not apportioned to or applied to reduce the basis of the S2 share).

(vi) *Attribute reduction under this paragraph (d) in lowest tier*. Although the sale of the S2 share is a transfer of subsidiary stock at the next lower tier, the S2 share is not a loss share. Thus, this paragraph (d) does not apply with respect to that transfer. However, S2, S3, and S4 have attribute reduction amounts that tiered down from S1 and that are applied to reduce attributes under this paragraph (d).

(A) *Tier down of S1's attribute reduction amount to S2*. Under the general rules of this paragraph (d), S2's $17.50 tier-down attribute reduction amount is allocated and applied to reduce S2's basis in Asset 2 from $75 to $57.50.

(B) *Tier down of S1's attribute reduction amount to S3*. Under the general rules of this paragraph (d), S3's $52.50 tier-down attribute reduction amount is allocated and applied to reduce S3's basis in Asset 3 from $75 to $22.50.

(C) *Tier down of S1's attribute reduction amount to S4, application of conforming limitation*. Under the general rules of this paragraph (d), S4's $70 tier-down attribute reduction amount is allocated to, and would be applied to reduce, S4's basis in Asset 4. However, under paragraph (d)(5)(v)(B) of this section, the reduction is limited to the excess of S4's $80 net inside attribute amount over the $30 basis of the S4 share (after reduction under this paragraph (d)). As a result, only $50 (the excess of $80 over $30) of S4's $70 attribute reduction amount is applied to S4's basis in Asset 4, reducing it from $80 to $30. The $20 unapplied portion of S4's tier-down attribute reduction amount subject to the conforming limitation is disregarded and has no further effect.

(vii) *Application of basis restoration rule*. Under paragraph (d)(5)(vi)(A) of this section, after this paragraph (d) has been applied with respect to all transfers of subsidiary stock, any reduction made to the basis of a share of lower-tier subsidiary stock under paragraph (d)(5)(iii) of this section is reversed to the extent necessary to conform the basis of that share to the share's allocable portion of the subsidiary's net inside attribute amount. Restoration adjustments are first made at the lowest tier and then at each next higher tier successively.

(A) *Basis restoration at lowest tier*. The basis of the S2 share was not reduced under paragraph (d)(5)(iii) of this section and so there is no restoration of any basis in the S2 share. S3's $22.50 net inside attribute amount (after reduction under this paragraph (d)) exceeds S1's $7.50 basis in the S3 share (after reduction under this paragraph (d)) by $15. To conform S1's basis in the S3 share to S3's net inside attribute amount, the $52.50 reduction to the basis of the S3 share under paragraph (d)(5)(iii) of this section is reversed by $15 (restoring S1's basis in the S3 share to $22.50). The restoration of S1's basis in the S3 share does not tier up to affect the basis in stock of any other subsidiary. S1's $30 basis in the S4 share (after reduction under this paragraph (d)) is already conformed with S4's $30 net inside attribute amount (after reduction under this paragraph (d)) and so there is no restoration of any basis in the S4 share.

(B) *Basis restoration at next higher tier*. Each share of S1 stock has an allocable portion of S1's net inside attribute amount (after reduction) equal to $10.25 (1/10 × $102.50, the sum of S1's $0 basis in the S2 stock, adjusted

for the $50 gain recognized with respect to the share, S1's $22.50 basis in the S3 stock (after restoration), and S1's $30 basis in the S4 stock). Neither S's basis in S1 share 1 nor S's basis in S1 share 2 was reduced under paragraph (d)(5)(iii) of this section. Accordingly, there is no restoration of any basis in either S1 share 1 or share 2. However, S's basis in each of S1 share 3 through share 10 was reduced under paragraph (d)(5)(iii) of this section by $10, from $20 to $10. Accordingly, the $10 reduction to the basis of each of those shares is reversed to the extent of $.25, to restore the basis of each such share to $10.25 (its allocable portion of S1's net inside attribute amount).

(viii) *Results*. After the application of this section, P recognizes a loss of $360 on the sale of the S share, S recognizes a loss of $150 on the sale of S1 share 1, and S1 recognizes a $50 gain on the sale of the S2 share. Immediately after the transaction, the entities each directly own the following:

Entity	Asset	Basis	Value
P1	S share	$240	$240
P	Proceeds of the sale of S share	240	240
S	Proceeds of sale of S1 share 1	20	20
	Partnership interest received for S1 share 2	20	20
	S1 share 3 through share 10	82 ($10.25 per share).	
	Asset 1	80.	
S1	Proceeds of sale of S2 share	50	50
	The S3 share	22.50.	
	The S4 share	30.	
S2	Asset 2	57.50.	
S3	Asset 3	22.50.	
S4	Asset 4	30.	
X	S1 share 1	20	20
Partnership	S1 share 2	20	20
Y	The S2 share	50	50

(e) *Operating rules*—(1) *Predecessors, successors*. This section applies to predecessor or successor persons, groups, and assets to the extent necessary to effectuate the purposes of this section.

(2) *Adjustments for prior transactions that altered stock basis or other attributes*. In certain situations, M's basis in S stock or S's attributes may be adjusted in a manner that alters the relationship between stock basis and inside attributes and prevents that relationship from identifying the extent to which stock basis reflects unrecognized gain and duplicated loss. The provisions of this paragraph (e)(2) modify the computations in paragraphs (c) and (d) of this section to adjust for the effects of such adjustments.

(i) *Prior reductions to S's basis in assets or other attributes pursuant to section 362(e)(2)(A)*. If M transferred loss property to S in an intercompany transaction subject to section 362(e)(2) (for example, if the transfer was prior to September 17, 2008, no election was made to apply § 1.1502–80(h), and, as a result, S's attributes were reduced under section 362(e)(2)), then the disconformity amount of the S shares received in the section 362(e)(2) transaction is reduced by the amount that the basis in such shares would have been reduced under section 362(e)(2)(C) had such an election been made. In addition, for purposes of determining the attribute reduction amount under paragraph (d) of this section resulting from the transfer of any S shares received (or deemed received) in such a transfer, and for purposes of applying paragraph (d)(5)(v)(B) of this section (conforming limitation) to S, the bases in such shares is treated as reduced by the amount the bases in such shares would have been reduced under section 362(e)(2)(C) had such an election been made.

(ii) *Prior reductions to the basis of any share of S stock pursuant to an election under section 362(e)(2)(C)*. If M transferred loss property to S in an intercompany transaction subject to section 362(e)(2) and the basis of any share of S stock was reduced as the result of an election under section 362(e)(2)(C) (including in the hands of a predecessor, to the extent that the effect of the election remains reflected in the basis of the S stock), then, for purposes of computing either any S share's disconformity amount or S's aggregate inside

loss, and for purposes of applying paragraph (d)(5)(vi)(A) of this section (stock basis restoration) to S, S's net inside attribute amount is treated as reduced by the amount that S's attributes would have been reduced under section 362(e)(2)(A) in the absence of an election under section 362(e)(2)(C). Notwithstanding the general rule of this paragraph (e)(2)(ii), no reduction will be required to the extent that the group can establish that the net loss in the S shares transferred by M is no longer reflected in S's net inside attributes.

(iii) *Other adjustments.* Appropriate adjustments will be made in any other case in which an adjustment to S's net inside attributes or to M's basis in a share of S stock alters the relationship between such amounts, and the adjustment does not relate to the extent to which loss reflected in M's basis in S stock is noneconomic or duplicated within the meaning of this section.

(3) *Special rules for subsidiary stock transferred in an intercompany transaction*—(i) *In general.* This section applies with respect to M's transfer of a share of S stock to another member in an intercompany transaction in which M's intercompany item is deferred under §1.1502–13 (and to any subsequent transfer of that share by a member) as of the time M's intercompany item is taken into account under §1.1502–13. In determining the application of this section, all transferor-members are treated as divisions of a single corporation. Appropriate adjustments will be made to the intercompany item(s), any member's basis in an S share, to S's attributes, or any combination thereof, to further the purposes of this section and §1.1502–13.

(ii) *Certain prior intercompany transactions.* If M transferred a share of S stock to another member before September 17, 2008 and M's intercompany item related to the transfer is taken into account on or after September 17, 2008, P may elect to apply this paragraph (e)(3) to the transfer. The election is made in the manner provided in paragraph (e)(5) of this section.

(iii) *Examples.* The application of this paragraph (e)(3) is illustrated by the following examples:

Example 1. Intercompany sale with duplicated loss. (i) *Buying member later sells at gain.* (A) *Facts.* M owns the sole outstanding share of stock of S with a basis of $100. S has one asset with a basis of $100. M sells the S share to M1 for $70, recognizing a loss of $30. While owned by M1, S recognizes $10 of depreciation deductions that are absorbed by the group. S's basis in the asset is reduced by $10 (from $100 to $90), and M1's basis in the S stock is reduced under §1.1502–32 by $10 (from $70 to $60). Later, M1 sells the S share to X, an unrelated person, for $80.

(B) *Analysis.* M's sale of its S share to M1 is a transfer of the share, but this section applies as of the time M's intercompany item is taken into account under §1.1502–13, as if M and M1 were divisions of a single corporation. If M and M1 were divisions of a single corporation, the S share's basis would be $90 ($100 reduced by $10 for the depreciation deductions absorbed by the group) and the group would recognize a $10 loss on the sale of the share that is potentially subject to this section. Thus, the sale would be a transfer of a loss share (to the extent of $10) and would be subject to this section (to the extent of that $10). Although the transfer would be subject to this section, there would be no adjustment under paragraph (b) of this section (S has only one share outstanding and so there is no disparity in bases of common shares and no unrecognized gain or loss with respect to preferred) or under paragraph (c) of this section (S has no net positive adjustment). Thus, after the application of paragraph (c) of this section, the share would still be a loss share and would therefore be subject to paragraph (d) of this section. Under paragraph (d) of this section, S would be subject to $10 of attribute reduction (the lesser of the $10 net stock loss and S's $10 aggregate inside loss), allocable to the basis in S's asset. Accordingly, S's basis in its asset is reduced by $10, from $90 to $80, M takes its $30 intercompany stock loss into account, and M1 recognizes a $20 stock gain.

(ii) *Selling member deconsolidates.* Assume the same facts as in paragraph (i)(A) of this *Example 1,* except that M1 does not sell the S share and M ceases to be a member of the group when the value of the S share is $80. Under §1.1502–13, M's deconsolidation causes M's intercompany loss to be taken into account and this section applies at that time. At the time that M deconsolidates, if M and M1 were divisions of a single corporation, the basis in the S share would be $90 ($100 reduced by $10 for the depreciation deductions absorbed by the group) and the group would recognize a $10 loss on the sale of the share that is potentially subject to this section. Such a sale would be a transfer of a loss share (to the extent of $10) and would be subject to this section (to the extent of that $10). The analysis is then the same as in

paragraph (i)(B) of this *Example 1*. As a result, S's basis in its asset is reduced from $90 to $80, M takes its $30 intercompany stock loss into account, and M1 holds the S stock with a basis of $60 (and an unrecognized gain of $20).

(iii) *M1 sells the S share at a loss*. Assume the same facts as in paragraph (i)(A) of this *Example 1*, except that S declines in value and M1 sells the S share to X for $50, realizing a $10 loss. In this case, if M and M1 were divisions of a single corporation, the share's basis would be $90 ($100 reduced by $10 for the depreciation deductions absorbed by the group) and the group would recognize a $40 loss on the sale of the share that is potentially subject to this section. Thus, the sale would be a transfer of a loss share (to the extent of $40) and would be subject to this section (to the extent of that $40). Although the transfer would be subject to this section, for the reasons set forth in paragraph (i)(B) of this *Example 1*, there would be no adjustment under either paragraph (b) or paragraph (c) of this section. Thus, after the application of paragraph (c), the share would still be a loss share and would therefore be subject to paragraph (d) of this section. Under paragraph (d) of this section, S would be subject to $40 of attribute reduction (the lesser of the $40 net stock loss and S's $40 aggregate inside loss), allocable to the basis in S's asset. Accordingly, S's basis in its asset is reduced by $40, from $90 to $50, M takes its $30 intercompany stock loss into account, and M1 recognizes a $10 stock loss.

Example 2. Intercompany sale of built-in gain stock. (i) *Facts*. M owns the sole outstanding share of stock of S with a basis of $100. S's sole asset has a basis of $0. S sells its asset for $100 and recognizes a $100 gain that increases M's basis in its S share under § 1.1502–32 to $200. M sells the S share to M1 for $100 and recognizes a $100 intercompany loss. Later, M1 sells the S share to X, an unrelated person, for $120.

(ii) *Analysis*. M's sale of the S share to M1 is a transfer of the share, but this section applies as of the time M's intercompany item is taken into account under § 1.1502–13, as if M and M1 were divisions of a single corporation. If M and M1 were divisions of a single corporation, the S share's basis would be $200 ($100 increased by $100 for the gain recognized on the sale of the asset) and the group would recognize an $80 loss on the sale of the share that is potentially subject to this section. Thus, the sale would be a transfer of a loss share (to the extent of $80) and would be subject to this section (to the extent of that $80). Although the transfer would be subject to this section, there would be no adjustment under paragraph (b) of this section (S has only one share outstanding and so there is no disparity in bases of common shares and no unrecognized gain or loss with respect to preferred). Thus, after the application of paragraph (b), the share would still be a loss share and would therefore be subject to paragraph (c) of this section. Under paragraph (c) of this section, the basis in the S share would be reduced, but not below its $120 value, by the lesser of the $100 disconformity amount and the $100 net positive adjustment that was applied to the share when held by M. Accordingly, the basis in the S share would be reduced by $80, to $120. Because the S share would not be a loss share after the application of paragraph (c) of this section, paragraph (d) of this section would not apply to the transfer. As a result, because the positive adjustment was applied to the share when held by M, M's intercompany item is adjusted to reflect what it would have been had M's basis in its S share been reduced by $80 immediately before its sale to M1. Thus, M's intercompany loss is reduced to $20 and M takes this loss into account, and M1 recognizes a gain of $20.

Example 3. Intercompany sale creates built-in gain stock. (i) *Facts*. M owns the sole outstanding share of stock of S with a basis of $0. S's sole asset has a basis of $0. M sells the S share to M1 for $100 and recognizes a $100 intercompany gain. While owned by M1, S sells its asset for $100, recognizing a $100 gain that increases M1's basis in the S share under § 1.1502–32 to $200. Later, M1 sells the S share to X for $120.

(ii) *Analysis*. M's sale of its S share to M1 is a transfer of the share, but this section applies as of the time M's intercompany item is taken into account under § 1.1502–13, as if M and M1 were divisions of a single corporation. If M and M1 were divisions of a single corporation, the S share's basis would be $100 ($0 increased by $100 for the gain recognized on the sale of the asset) and the group would recognize a $20 gain on the sale of the share. Thus, the sale would not be a transfer of a loss share and this section would not apply to the transfer. Accordingly, under this paragraph (e)(3), no portion of M1's $80 loss is subject to this section. M takes its $100 intercompany stock gain into account, and M1 recognizes an $80 loss.

Example 4. Disparate bases in members' shares. (i) *Facts*. M holds Share A, one of the two outstanding shares of S stock, with a basis of $50 and M1 holds Share B, the other outstanding share of S stock with a basis of $0. S has $50 cash and an asset with a basis of $0. S sells the asset for $50, recognizing a $50 gain that increases M's basis in its S share under § 1.1502–32 by $25 (from $50 to $75) and increases M1's basis under § 1.1502–32 by $25 (from $0 to $25). Later, M sells its Share A to M1 for $50 and recognizes a $25 intercompany loss. Later, M1 sells both S shares to X for $100.

(ii) *Analysis*. M's sale of its Share A to M1 is a transfer of the share, but this section applies as of the time M's intercompany item is taken into account under § 1.1502–13, as if M

and M1 were divisions of a single corporation. If M and M1 were divisions of a single corporation, the basis of Share A would be $75 ($50 increased by $25 for its share of the gain recognized on the sale of the asset), the basis of Share B would be $25, and the group would recognize a $25 loss on the sale of Share A that is potentially subject to this section and a $25 gain on the sale of Share B. Thus, the sale would be a transfer of a loss share (to the extent of $25) and would be subject to this section (to the extent of that $25). Although the transfer is subject to this section, there would be no adjustment under paragraph (b) of this section (all S shares held by members are transferred to a nonmember in one taxable transaction). Thus, after the application of paragraph (b), Share A would still be a loss share and therefore subject to paragraph (c) of this section. Under paragraph (c)(7) of this section, the basis of Share A would be treated as reduced by the gain recognized and taken into account with respect to the transfer of Share B in the same transaction, and so Share A would not be a loss share for purposes of paragraph (c) of this section. Although the share would be a loss share after the application of paragraph (c) of this section, no adjustment would be required under paragraph (d) of this section because there would be no net stock loss in the transaction. Because no adjustment would be made under this section if M and M1 were divisions of a single corporation, M takes its $25 intercompany stock loss into account and M1 recognizes a gain of $25. Alternatively, if the group elects to apply paragraph (b) of this section, M's intercompany item would be adjusted to reflect what it would have been had the $25 investment adjustment applied to Share A been reallocated to Share B, and M1's basis in Share B would be increased by that amount. If so, M's $25 intercompany loss would be reduced to zero, M1's basis in Share B would be increased from $25 to $50, and there would be no gain or loss recognized on either share.

Example 5. Subsidiary with built-in gain and built-in loss assets. (i) *Facts.* M owns the sole outstanding share of stock of S with a basis of $100. S has two assets, Asset 1 with a basis of $0 and Asset 2 with a basis of $80. M sells the S share to M1 for $90 and recognizes a $10 intercompany loss. While owned by M1, S sells Asset 1 for $60, recognizing a $60 gain that increases M1's basis in the S share under §1.1502–32 to $150. Later, M1 sells the S share to X for $90.

(ii) *Analysis.* M's sale of the S share to M1 is a transfer of the share, but this section applies as of the time M's intercompany item is taken into account under §1.1502–13, as if M and M1 were divisions of a single corporation. If M and M1 were divisions of a single corporation, the S share's basis would be $160 ($100 increased by $60 for the gain recognized on the sale of Asset 1) and the group would recognize a $70 loss on the sale of the share that is potentially subject to this section. Thus, the sale would be a transfer of a loss share (to the extent of $70) and would be subject to this section (to the extent of that $70). Although the transfer is subject to this section, there would be no adjustment under paragraph (b) of this section (S has only one share outstanding and so there is no disparity in bases of common shares and no unrecognized gain or loss with respect to preferred). Thus, after the application of paragraph (b), the share would still be a loss share and would therefore be subject to paragraph (c) of this section. Under paragraph (c) of this section, the basis in the S share would be reduced, but not below its $90 value, by the lesser of the $20 disconformity amount ($160 stock basis over $140 net inside attribute amount) and the $60 net positive adjustment that was applied to the share when held by M1. Accordingly, the basis in the S share would be reduced by $20, to $140. Because the S share would still be a loss share after the application of paragraph (c) of this section, paragraph (d) of this section would apply to the transfer. Under paragraph (d) of this section, S would have an attribute reduction amount of $50, the lesser of the $50 net stock loss ($140 basis over $90 value) and S's $50 aggregate inside loss (the excess of the sum of S's $80 basis in Asset 2 and S's $60 cash from the sale of Asset 1, over the $90 value of the S share). The adjustments required under this section are applied as follows: because the positive adjustment was applied to the share when held by M1, the $20 basis reduction required under paragraph (c) of this section is applied to M1's basis in its S share immediately before its sale to X, reducing it from $150 to $130. In addition, pursuant to paragraph (d) of this section, S's basis in Asset 2 is reduced by $50, from $80 to $30. M takes its $10 intercompany stock loss into account and M1 recognizes a loss of $40.

(iii) *Allocation of basis reduction.* Assume the same facts as in paragraph (i) of this *Example 5*, except that, while S is held by M, S earns $30 (consuming a portion of Asset 1) and, while S is held by M1, S earns $20 (consuming a portion of Asset 1) and sells Asset 1 for $10. Thus, M's basis in the S share immediately before the sale to M1 is $130, and M recognizes a $40 intercompany stock loss, and M1's basis in the S share immediately before the sale to X is $120. The analysis regarding the application of this section is the same as in paragraph (ii) of this *Example 5*. On a separate entity basis, M's basis in the S share would be subject to a $20 reduction under paragraph (c) of this section (at the time M transferred the S share the share had a $30 net positive adjustment and a $20 disconformity amount), and M1's basis in the S share would not be subject to reduction under paragraph (c) of this section (at the

time M1 transferred the S share the share had a $30 net positive adjustment and a $20 negative disconformity amount). Therefore, the $20 basis reduction required under paragraph (c) of this section is allocated entirely to M. Accordingly, M's intercompany item is adjusted to reflect what it would have been had the entire $20 basis reduction been applied to the S share while held by M, and M1's basis in the S share is not reduced. Thus, M's intercompany stock loss is reduced by $20 to $20 and M takes this loss into account, and M1 recognizes a $30 loss. S's basis in Asset 2 is reduced by $50, from $80 to $30.

(4) *Limited application to multiple-member section 332 liquidations*. If more than one member owns shares of S stock, paragraphs (c) and (d) of this section do not apply to any transfer of S shares resulting from a liquidation of S to which section 332 applies.

(5) *Form and manner of election(s) under this section*. The elections provided in this section are irrevocable and made in the form of a statement titled ''Section 1.1502–36 Statement.'' The statement must be included on or with the group's timely filed return (original or amended, if filed by the due date for the return, including extensions) for the taxable year of the transfer of the subsidiary stock to which the election relates or, in the case of an intercompany transfer, the year in which the intercompany item from the transfer is taken into account. The statement must include—

(i) The name and employer identification number (E.I.N.) of each subsidiary with respect to which an election is being made;

(ii) If P is electing under paragraph (b)(1)(ii) of this section to redetermine basis with respect to the transfer of stock of one or more subsidiaries, a statement that members' bases in shares of [name of subsidiary or subsidiaries] stock are being redetermined notwithstanding that all members' shares of [name of subsidiary or subsidiaries] are being transferred to one or more nonmembers in one fully taxable transaction;

(iii) If P is electing under paragraph (d)(2)(ii) of this section (attribute reduction amount less than five percent of value) to apply the attribute reduction provisions, a statement that paragraph (d) of this section is being applied to the transfer of shares of stock of [names of all subsidiaries whose shares are transferred] notwithstanding that the aggregate attribute reduction amount in the transaction is less than five percent of the aggregate value of the stock of [names of all subsidiaries whose shares are transferred] transferred by members in the transaction;

(iv) If P is electing under paragraph (d)(4)(ii)(A)(*1*) of this section to specify the allocation of the attribute reduction amount, a statement (for each subsidiary for which the election is being made) that the attribute reduction amount of [name of subsidiary] is being applied (or not applied) to reduce [identify the attributes in Category A, Category B, and Category C, and the amount of each, with respect to which the election is being made];

(v) If P is electing under paragraph (d)(5)(v)(B) of this section not to apply the conforming limitation on tier-down attribute reduction with respect to one or more subsidiaries, a statement that the conforming limitation in paragraph (d)(5)(v)(B) of this section is not being applied with respect to [name of subsidiary or subsidiaries];

(vi) If P is electing under paragraph (d)(5)(vi)(B) of this section not to restore lower-tier subsidiary stock basis with respect to one or more subsidiaries, a statement that members' bases in [name of subsidiary or subsidiaries] is not being restored under paragraph (d)(5)(vi)(A) of this section;

(vii) If P is electing under paragraph (d)(6) of this section to reattribute attributes, a statement (for each subsidiary for which the election is being made) that [identify the attributes in Category A, Category B, and Category C, and the amount of each or the amount in excess of an amount, with respect to which the election is being made] of [name of subsidiary] are being reattributed (or not) to P;

(viii) If P is electing under paragraph (d)(6) of this section to reduce stock basis, a statement (for each subsidiary for which the election is being made) that members' bases in shares of stock of [name of subsidiary] are being reduced by [specify amount or the amount in excess of an amount];

(ix) If P is electing under paragraph (e)(3)(ii) of this section to apply paragraph (e)(3) of this section to an intercompany transfer that occurred before September 17, 2008, a statement that paragraph (e)(3) of this section is being elected to apply to the transfer of stock of [name of subsidiary] by [name of transferor subsidiary] to [name of transferee subsidiary] on [date of transfer]; and

(x) If P is electing under § 1.1502–96(d)(5) to reattribute to itself all or any part of a section 382 limitation, a statement that P is electing to reattribute a section 382 limitation with respect to losses of [name of subsidiary or, if two or more subsidiaries are members of a loss subgroup, the name of each subsidiary in the loss subgroup]. A separate statement is made for each subsidiary or loss subgroup for which an election is being made. Each statement must include—

(A) The date of the ownership change giving rise to the separate section 382 limitation or subgroup section 382 limitation that is being apportioned;

(B) The amount of the separate (or subgroup) section 382 limitation for the taxable year in which the reattribution occurs (determined without reference to any apportionment under this section or § 1.1502–95(c)); and

(C) The amount of each net operating loss carryover, capital loss carryover, or deferred deduction, and the year in which it arose, of the subsidiary (or subsidiaries) that is subject to the separate section 382 limitation or subgroup section 382 limitation that is being apportioned to the common parent, and the amount of the value element and adjustment element of that limitation that is apportioned to the common parent.

(f) *Definitions*. In addition to the definitions in other paragraphs of this section and in other provisions of the regulations under section 1502, the following definitions apply for purposes of this section.

(1) *Allocable portion* has the same meaning as in § 1.1502–32(b)(4)(iii)(B). Thus, for example, within a class of stock, each share has the same allocable portion of the net inside attribute amount and, if there is more than one class of stock, the net inside attribute amount is allocated to each class by taking into account the terms of each class and all other facts and circumstances relating to the overall economic arrangement.

(2) *Deferred deduction* means any deduction for expenses or loss that would be taken into account under general tax accounting principles as of the time of the transfer of the share, but that is nevertheless not taken into account immediately after the transfer by reason of the application of a deferral provision. Such provisions include, for example, sections 267(f) and 469, and § 1.1502–13. ''Deferred deduction'' also includes S's portion of such consolidated tax attributes, for example consolidated excess charitable contributions that would be apportioned to S under the principles of § 1.1502–79(e) if S had a separate return year. Additionally, it includes amounts equivalent to deductions, such as negative adjustments under section 475 (mark to market accounting method for dealers in securities) and section 481 (adjustments required by changes in method of accounting).

(3) *Distribution* has the same meaning as in § 1.1502–32(b)(3)(v).

(4) *Higher-tier, lower-tier*. A subsidiary (S1) (and its shares of stock) is ''higher-tier'' with respect to another subsidiary (S2) (and its shares of stock) if investment adjustments made to the bases of shares of S2 stock under § 1.1502–32 affect the investment adjustments made to the bases of shares of S1 stock. A subsidiary (S1) (and its shares of stock) is ''lower-tier'' with respect to another subsidiary (S) (and its shares of stock) if investment adjustments made to the bases of shares of S1 stock affect the investment adjustments made to the bases of shares of S stock. The term *lowest-tier subsidiary* generally refers to a subsidiary that owns no stock of another subsidiary. The term *highest-tier subsidiary* generally refers to a subsidiary the stock of which is not lower tier to any shares transferred in the transaction.

(5) *Liability* means a liability that has been incurred within the meaning of section 461(h), except to the extent otherwise provided in paragraph (d)(4)(ii)(C)(*1*) of this section.

(6) *Loss carryover* means any net operating or capital loss carryover that is attributable to S, including any losses that would be apportioned to S under the principles of § 1.1502–21(b)(2) if S had a separate return year. However, solely for purposes of applying paragraph (d) of this section, loss carryovers do not include the amount of any losses waived under § 1.1502–32(b)(4).

(7) *Loss share, gain share.* A *loss share* is a share of stock with a basis that exceeds its value. A *gain share* is a share of stock with a value that exceeds its basis.

(8) *Preferred stock, common stock. Preferred stock* and *common stock* have the same meanings as in § 1.1502–32(d)(2) and (3), respectively.

(9) *Transaction* includes all the steps taken pursuant to the same plan or arrangement.

(10) *Transfer*—(i) *Definition.* Except as provided in paragraph (f)(10)(ii) of this section, for purposes of this section, M transfers a share of S stock on the earliest of—

(A) The date that M ceases to own the share as a result of a transaction in which, but for the application of this section (and notwithstanding the deferral of any amount recognized on the transfer, other than by reason of § 1.1502–13), M would recognize income, gain, loss or deduction with respect to the share (see paragraph (e)(3) of this section in the case of a transfer in an intercompany transaction);

(B) The date that M and S cease to be members of the same group;

(C) The date that a nonmember acquires the share from M; and

(D) The last day of the taxable year during which the share becomes worthless under section 165 (taking into account the provisions of § 1.1502–80(c)) if the share is treated as a capital asset, or the date the share becomes worthless (taking into account the provisions of § 1.1502–80(c)) if the share is not treated as a capital asset.

(ii) *Excluded transactions.* Notwithstanding paragraph (f)(10)(i) of this section, M does not transfer a share of S stock if—

(A) M ceases to own the share as a result of a transaction to which section 381(a) applies and in which either a member acquires assets from S or S acquires assets from M, provided that—

(*1*) M recognizes no income, gain, loss, or deduction with respect to the share, and

(*2*) If the transaction is a liquidation to which section 332 applies, M is the only member that owns shares of S stock (if another member owns shares of S stock, see paragraph (e)(4) of this section for a limitation on the application of this section); or

(B) M ceases to own the share as a result of a distribution of the share to a nonmember in a transaction to which section 355 applies, and in which the share is treated as qualified property for purposes of section 355(c) or section 361(c).

(11) *Value* means the amount realized, if any, or otherwise the fair market value.

(g) *Anti-abuse rule*—(1) *General rule.* If a taxpayer acts with a view to avoid the purposes of this section or to apply the rules of this section to avoid the purposes of any other rule of law, appropriate adjustments will be made to carry out the purposes of this section or such other rule of law.

(2) *Examples.* The following examples illustrate the principles of the anti-abuse rule in this paragraph (g). No implication is intended regarding the potential applicability of any other anti-abuse rules:

Example 1. Loss Trafficking. (i) *Facts.* M purchases the sole outstanding share of S stock for $100. At that time, S owns Asset 1 with a basis of $0. S sells Asset 1 for $100. Later, S purchases the sole outstanding share of X stock, a corporation with losses, with a view to liquidating X in a transaction to which section 332 applies in order to reduce S's disconformity amount. S purchases the X share for $1, and X has a $100 NOL and an asset with a basis of $1. Subsequently, M sells its S share for $100. After taking into account the effects of all applicable rules of law, M's basis in the S share is $200 (M's original $100 basis, increased under § 1.1502–32 to reflect the $100 gain recognized on the sale of Asset 1). M's sale of the S share is a transfer of a loss share and therefore subject to this section.

(ii) *Analysis.* Although M's transfer of the S share is subject to this section, there is no adjustment under paragraph (b) of this section (S has only one share outstanding and so there is no disparity in bases of common shares and no shares of S preferred stock outstanding (and so there is no unrecognized

gain or loss on S preferred stock)). See paragraph (b)(1)(ii)(A) of this section. Accordingly, after the application of paragraph (b) of this section, M's sale of the S share is still a transfer of a loss share and therefore subject to paragraph (c) of this section. Under paragraph (c) of this section, M's $200 basis in the S share is reduced, but not below the share's $100 value, by the lesser of the share's net positive adjustment and disconformity amount. The share's net positive adjustment is $100, the positive adjustment attributable to the gain recognized on the sale of Asset 1. The share's disconformity amount is $0, the excess of M's $200 basis in the S share over S's $200 net inside attribute amount. Thus, the reduction to basis under paragraph (c) of this section would be $0. However, because S purchased the X stock and liquidated X with a view to avoiding the purposes of this section (by using X's attributes to minimize the disconformity amount of the S share), the attributes acquired from X are disregarded for purposes of applying this section. Accordingly, S's net inside attribute amount is limited to the $100 of attributes S would have had absent the purchase of the X stock, S's money ($100 from the sale of Asset 1). The loss share's disconformity amount is therefore the excess of $200 over $100, or $100. The lesser of the share's $100 net positive adjustment and $100 disconformity amount is $100. As a result, M's $200 basis in the S share is reduced by $100, to $100, and M recognizes no gain or loss on the sale of the S share.

Example 2. Use of a partnership to prevent current attribute reduction. (i) *Facts.* M owns all 5 outstanding shares of S common stock with a basis of $200 each. S owns Asset 1 with a basis of $1000. In year 1, with a view to preventing a current reduction in the basis of Asset 1, S contributes Asset 1 to a partnership in a transaction in which S recognizes no gain or loss. On December 31, year 2, M sells one S share for $20. After taking into account the effects of all applicable rules of law, M's basis in each S share is $200. M's sale of the S share is a transfer of a loss share and therefore subject to this section.

(ii) *Analysis.* Although M's transfer of the S share is subject to this section, there is no basis redetermination under paragraph (b) of this section because there is no disparity among M's bases in its shares of S common stock and there are no shares of S preferred stock outstanding (and so there is no unrecognized gain or loss on S preferred stock). See paragraph (b)(1)(ii)(A) of this section. Accordingly, after the application of paragraph (b) of this section, M's sale of the S share is still a transfer of a loss share and therefore subject to paragraph (c) of this section. However, no adjustment is required under paragraph (c) of this section because both the disconformity amount and the net positive adjustment are $0. See paragraph (c)(3) of this section. Under paragraph (d) of this section, S's attribute reduction amount is $180 (the lesser of the $180 net stock loss and S's $900 aggregate inside loss ($1000 of attributes over $100 value of all of the S shares)). Absent the application of this paragraph (g), the $180 attribute reduction amount would be applied to reduce S's basis in the partnership interest. However, because S acted with a view to avoiding a current reduction in the basis of Asset 1 under paragraph (d) of this section, this section is applied by treating S as if it held Asset 1 at the time of the stock sale. The basis of Asset 1 is reduced by $180, to $820, effective immediately before the transfer to the partnership and, as a result, S's basis in its partnership interest is $820.

Example 3. Creation of an intercompany receivable to mitigate attribute reduction. (i) *Facts.* M owns all five outstanding shares of S common stock each with equal basis that exceeds value. S holds cash and Asset 1 with a basis that exceeds value. In year 1, with a view to mitigating a reduction in the basis of Asset 1, S lends the cash to M1. Asset 1 and the intercompany note received from M1 are assets of the same class under § 1.338–6(b)(2). On December 31, year 2, M sells one of its S shares and, without regard to this section, recognizes a loss. M's sale of the S share is a transfer of a loss share and therefore subject to this section.

(ii) *Analysis.* Although M's transfer of the S share is subject to this section, no adjustment is required under paragraph (b) of this section because there is no disparity among M's bases in shares of S common stock and there are no shares of S preferred stock outstanding (and so there is no unrecognized gain or loss on S preferred stock). See paragraph (b)(1)(ii)(A) of this section. Accordingly, after the application of paragraph (b) of this section, M's sale of the S shares is still a transfer of a loss share and therefore subject to paragraph (c) of this section. However, there is no adjustment under paragraph (c) of this section because the net positive adjustment is $0. See paragraph (c)(3) of this section. Under paragraph (d) of this section, S's attribute reduction amount would be applied to reduce S's basis in Asset 1 and the intercompany receivable in proportion to basis. However, because S acted with a view to mitigating the reduction in the basis of Asset 1 under paragraph (d) of this section, this section is applied without regard to the intercompany receivable. Accordingly, S's basis in Asset 1 is reduced by the full attribute reduction amount.

Example 4. Use of a partnership to reduce net stock loss. (i) *Facts.* M owns all ten outstanding shares of S common stock, one share (Share 1) has a basis of $0, and one share (Share 2) has a basis of $160. S has an aggregate inside loss of $80. In one transaction and with a view to mitigating a reduction in S's attributes, M contributes

Share 1 to a partnership, recognizing no gain or loss, and sells Share 2 for $80. M's contribution of Share 1 to the partnership is a transfer, but the share is not a loss share and so the transfer is not subject to this section. M's sale of Share 2 is a transfer of a loss share and is therefore subject to this section.

(ii) *Analysis.* Although M's transfer of Share 2 is subject to this section, there is no adjustment under paragraph (b) of this section because there are no investment adjustments that have been applied to the shares. Accordingly, after the application of paragraph (b) of this section, M's sale of Share 2 is still a transfer of a loss share and therefore subject to paragraph (c) of this section. There is no adjustment under paragraph (c) of this section because the net positive adjustment is $0. See paragraph (c)(3) of this section. Accordingly, after the application of paragraph (c) of this section, M's sale of Share 2 is still a transfer of loss shares and therefore subject to paragraph (d) of this section. Under paragraph (d) of this section, the net stock loss would be determined to be $0, the excess of the $160 aggregate basis in all of the transferred shares over the $160 aggregate value of those shares. S's attribute reduction amount would be determined to be $0, the lesser of the $0 net stock loss and S's $80 aggregate inside loss. Thus, there would be no reduction of attributes under this paragraph (d) of this section. However, because M acted with a view to reducing the attribute reduction amount by transferring a gain share to a partnership while avoiding the recognition of the gain on the share, this section is applied without regard to the transfer of the gain share. Accordingly, the net stock loss is determined to be $80, and the attribute reduction amount is determined to be $80.

Example 5. Stuffing gain asset. (i) *Facts.* M owns the sole outstanding share of S stock (Share 1) with a basis of $100. S owns Asset 1 with a basis of $100 and a value of $20. With a view to avoid the purposes of this section, M transfers Asset 2 with a basis of $0 and a value of $80 to S in exchange for four additional shares of S stock (Share 2 through Share 5) in a transaction to which section 351 applies. M later sells Share 1 to X for $20. M's sale of Share 1 is a transfer of a loss share and therefore subject to this section.

(ii) *Analysis.* Although M's transfer of the Share 1 is subject to this section, there is no adjustment under paragraph (b) of this section because no investment adjustments have been applied to the basis of any S shares. Thus, after the application of paragraph (b) of this section, M's sale of the S share is still a transfer of a loss share and therefore subject to paragraph (c) of this section. There is no adjustment under paragraph (c) of this section because the net positive adjustment is $0. Accordingly, after the application of paragraph (c) of this section, M's sale of the S share is still a transfer of a loss share and therefore subject to paragraph (d) of this section. Under paragraph (d) of this section, S's attribute reduction amount would be $0, the lesser of the $80 net stock loss and S's $0 aggregate inside loss ($100 of attributes does not exceed the $100 value of all of the S shares). However, because M transferred Asset 2 to S with a view to avoid the purposes of this section, the application of this section to M's transfer of Share 1 is made without regard to the transfer of Asset 2. Accordingly, under paragraph (d) of this section, S's attribute reduction amount is $80, the lesser of the $80 net stock loss and S's $80 aggregate inside loss (computed without regard to Asset 2). S's basis in Asset 1 is therefore reduced by $80, from $100 to $20, under paragraph (d) of this section.

(iii) *Transfer of all S shares.* Assume the same facts as in paragraph (i) of this *Example 5,* except that M sells all five S shares to X, recognizing both the gain and the loss on the S shares. The transfer of Share 1 is still a transfer of a loss share and therefore subject to this section. However, because all the shares are transferred, the group's income is clearly reflected. Therefore, the purposes of this section are not avoided and this section applies without modification. S's attribute reduction amount is $0, the lesser of the $0 net stock loss and S's $0 aggregate inside loss.

(h) *Effective/applicability date.* This section applies to transfers of shares of subsidiary stock on or after September 17, 2008 unless the transfer was made pursuant to a binding agreement that was in effect prior to September 17, 2008 and at all times thereafter. For transfers of shares of subsidiary stock that are not subject to this section, see §§ 1.337(d)–2 and 1.1502–35.

[T.D. 9424, 73 FR 53952, Sept. 17, 2008, as amended at 73 FR 62204, Oct. 20, 2008; 73 FR 65982, Nov. 6, 2008]

SPECIAL TAXES AND TAXPAYERS

§ 1.1502–42 Mutual savings banks, etc.

(a) *In general.* This section applies to mutual s avings banks and other institutions described in section 593(a).

(b) *Total deposits.* In computing for purposes of section 593(b)(1)(B)(ii) total deposits or withdrawable accounts at the close of the taxable year, the total deposits or withdrawable accounts of other members shall be excluded.

(c) *Taxable income; taxable years for which the due date (without extensions) for filing returns is before March 15, 1983.*

For taxable years for which the due date (without extensions) for filing returns is before March 15, 1983, a member's taxable income for purposes of section 593(b)(2) is determined under § 1.1502–27(b) (computed without regard to any deduction under section 593(b)(2)). In addition, for taxable years beginning after July 11, 1969, taxable income as computed under the preceding sentence is subject to the adjustments provided in section 593(b)(2)(E). See § 1.593–6A(b)(5).

(d) *Taxable income; taxable years for which the due date (without extensions) for filing returns is after March 14, 1983*—(1) *In general.* For a taxable year for which the due date (without extensions) for filing returns is after March 14, 1983, a thrift's taxable income for purposes of section 593(b)(2) is its tentative taxable income (as defined in paragraph (e)(1) of this section).

(2) *Definitions.* For purposes of this section:

(i) A *thrift* is a member described in section 593(a).

(ii) A *nonthrift* is a member that is not a thrift.

(e) *Tentative taxable income (or loss)*—(1) *Thrift.* For purposes of this section, a thrift's tentative taxable income (or loss) is its separate taxable income (determined under § 1.1502–12 without paragraph (q) thereof and without any deduction under section 593(b)), subject to the following adjustments in the following order:

(i) The adjustments described in paragraph (e)(3) of this section;

(ii) The adjustments described in section 593(b)(2)(E) for those thrifts with separate taxable income greater than zero (determined after the adjustments under paragraph (e)(3) of this section); and

(iii) The adjustments described in paragraph (f) of this section.

(2) *Nonthrift.* For purposes of this section, a nonthrift's tentative taxable income (or loss) is its separate taxable income (determined under § 1.1502–12), adjusted for the portion of the consolidated net operating loss deduction attributable to the member, the portion of the consolidated net capital loss carryover or carryback attributable to the member, and further adjusted as described in paragraph (e)(3) of this section.

(3) *Adjustments for all members.* For each member, the following adjustments taken into account in the computation of consolidated taxable income are included in determining its tentative taxable income (or loss) in order to adjust separate taxable income of the member to take into account certain consolidated items:

(i) The portions of the consolidated charitable contributions deduction and the consolidated dividends received deduction attributable to the member.

(ii) The member's capital gain net income, determined without any net capital loss carryover or carryback attributable to the member.

(iii) The member's net capital loss and section 1231 net loss, reduced by the portion of the consolidated net capital loss attributable to the member.

(f) *Adjustments for thrifts*—(1) *Reductions.* A thrift's separate taxable income (as adjusted under paragraph (e)(3) of this section) is reduced (but not below zero) by losses of thrifts and to the extent attributable to functionally related activities, losses of a nonthrift. Certain operating rules for determining the amount of the reductions are provided in paragraph (f)(4) of this section. The reductions are made in the following amounts in the following order:

(i) The thrift's allocable share (as determined under paragraph (h)(2) of this section) of another thrift's tentative taxable loss. That tentative taxable loss is determined by including a deduction under section 593(b) (other than paragraph (2) thereof) for the year in which the loss arises.

(ii) The thrift's allocable share (as determined under paragraph (h)(3) of this section) of the portion of the consolidated net operating loss deduction attributable to it or another thrift. That consolidated net operating loss deduction is determined by including a deduction under section 593(b) (other than paragraph (2) thereof) for the year in which the loss arose. The portion of a consolidated net operating loss deduction attributable to another thrift is computed by excluding losses arising in taxable years for which the due date

(without extensions) for filing returns is before March 15, 1983.

(iii) The thrift's allocable share (as determined under paragraph (h)(4) of this section) of the loss attributable to functionally related activities of a nonthrift (as determined under paragraph (g) of this section). For a rule netting that share against certain income attributable to functionally related activities of that nonthrift, see paragraph (f)(4)(iv) of this section.

(iv) The thrift's allocable share (as determined under paragraph (h)(3) of this section) of the portion of the consolidated net operating loss deduction attributable to functionally related activities of a nonthrift (as determined under paragraph (h)(5) of this section). That consolidated net operating loss deduction is determined by excluding losses arising in taxable years for which the due date (without extensions) for filing returns is before March 15, 1983. For a rule netting that share against certain income attributable to functionally related activities of that nonthrift, see paragraph (f)(4)(iv) of this section.

(2) *Increases*. (i) A thrift's separate taxable income (as adjusted under paragraphs (e)(3) and (f)(1) of this section) is increased in a subsequent consolidated return year to restore reductions made in a prior consolidated return year to a thrift's separate taxable income by reason of losses of a nonthrift. This increase is the amount of the thrift's allocable share (as determined under paragraph (h)(6) of this section) of the income attributable to functionally related activities of a nonthrift in a consolidated return year and is made only in that year. This increase is made only if both the thrift and the nonthrift were members of the group in the consolidated return years in which both the reduction and increase are made.

(ii) This subdivision (ii) limits the increases to a thrift's separate taxable income to assure that income of a particular nonthrift is used to restore reductions of a thrift only to the extent that such nonthrift's losses reduced the thrift's income. Therefore, as of the end of a consolidated return year, the cumulative increases to a thrift's tentative taxable income (by reason of income attributable to functionally related activities of a nonthrift) may not exceed the cumulative reductions to the thrift's separate taxable income made (by reason of the nonthrift's functionally related activities) under paragraph (f)(1) (iii) and (iv) of this section in the current and all prior consolidated return years during which both the thrift institution and the nonthrift institution were members of the group.

(iii) For a netting rule, see paragraph (f)(4)(iv) of this section.

(3) *Special Rule*. (i) If a carryback to a thrift's separate taxable income diminishes the reduction to a thrift's separate taxable income for a prior consolidated return year otherwise required by paragraph (f)(1) (iii) or (iv) of this section, then any increases to a thrift's separate taxable income under paragraph (f)(2) of this section for an intervening consolidated return year must be recomputed to take into account the effect of such carryback. Thus, if a net operating loss attributable to a thrift is carried back and completely offsets the thrift's separate taxable income (before the reductions under paragraph (f)(1) (iii) or (iv) or this section), any increase to the thrift's separate taxable income under paragraph (f)(2) of this section (attributable to a reduction in the year to which the loss is carried) for an intervening consolidated return year will be eliminated. The recomputation required by this subparagraph (3) must be reflected on an amended return for the intervening consolidated return year for which the increase was previously reported. See example (2) in paragraph (j) of this section.

(ii) If a deficiency for an intervening consolidated return year results from the application of paragraph (f)(3)(i) of this section with respect to an item to which section 6501(h) applies, the deficiency may be assessed at any time within the period described in section 6501(h).

(iii) For purposes of chapter 67 of the Code (relating to interest), the last date prescribed for payment of any tax owed as a result of the application of paragraph (f)(3)(i) of this section is

deemed to be the last day of the taxable year for which the item carried back arose.

(4) *Operating rules.* For purposes of paragraphs (d) through (j) of this section:

(i) The portion of a consolidated net operating loss deduction attributable to a member is determined as follows:

(A) First, determine under §§1.1502–21(b) (or §1.1502–79A(a)(3), as appropriate) the portion of each consolidated net operating loss attributable to the member for the particular year in which the loss arose.

(B) Second, apply the anti-double-counting rule in paragraph (h)(3)(iii) of this section so as not to take the same loss into account twice.

(C) Finally, apply the loss absorption limit in paragraph (f)(4)(iii) of this section to the total amount of the consolidated net operating loss deduction from a particular loss year.

(ii) Capital loss carryovers and carrybacks shall be taken into account in a manner consistent with the principles of paragraphs (d) through (j) of this section.

(iii) This subdivision (iii) prescribes a loss absorption limit. The total amount of the consolidated net operating loss deduction from a given year (loss year) taken into account as reductions under paragraph (f)(1) of this section for another year (absorption year) shall not exceed the amount of the consolidated net operating loss deduction attributable to the loss year absorbed in computing consolidated taxable income for the absorption year. For this purpose, consolidated taxable income for the absorption year shall include a deduction under section 593(b) (other than paragraph (2) thereof) for each thrift member.

(iv) This subdivision (iv) prescribes a rule for netting in certain cases income attributable to functionally related activities of a nonthrift in a consolidated return year (''income year'') against losses attributable to functionally related activities of that nonthrift which arise in a consolidated return year (''loss year''). That nonthrift's income is netted against the portion of that nonthrift's loss which would otherwise be applied in a consolidated return year (''reduction year'') under paragraph (f)(1) (iii) or (iv) of this section to reduce a thrift's tentative taxable income, but:

(A) Only if the income year is not later than the loss year and the reduction year, and

(B) Only to the extent the income had not previously been taken into account under paragraph (f)(2) of this section or this subdivision (iv) as of the close of the later of the loss year and the reduction year.

(g) *Income (or loss) attributable to functionally related activities of a nonthrift*—(1) *In general.* For purposes of this section, the income (or loss) attributable to functionally related activities of a nonthrift is the income (or loss) of the nonthrift:

(i) Attributable to the provision of assets or the rendition of services to a thrift (such as the leasing of office space or providing computer or financial services), or

(ii) Derived from the assets described in section 7701(a)(19)(C) (iii) through (x), but only if such assets comprise 5 percent or more of the gross assets of the nonthrift.

(2) *Amount of income (or loss).*The amount of income (or loss) from such activities is the excess of (i) gross income from such activities over (ii) the deductions of the nonthrift allocable and apportionable to that gross income under the principles of §1.861–8. The loss attributable to functionally related activities of a nonthrift is the excess (if any) of such deductions over such gross income. That loss, however, may not exceed the amount of the tentative taxable loss of that nonthrift (determined by excluding losses arising in taxable years for which the due date (without extensions) for filing returns is before March 15, 1983).

(h) *Allocation of income and losses*—(1) *In general.* Paragraphs (h)(2) through (5) of this section provides rules for allocating different losses among thrifts that have tentative taxable income greater than zero. Generally, these allocations are made in the order listed in paragraph (f)(1) of this section and are based upon the relative tentative taxable income of the thrifts to which the particular loss is allocated. For purposes of each allocation under a subdivision of such paragraph (f)(1), the

tentative taxable income of the thrifts used in making this allocation is reduced by the thrift's allocable share of losses allocated to the thrift under a prior subdivision of such paragraph (f)(1). Accordingly, for purposes of this paragraph (h), tentative taxable income is determined without regard to paragraph (f) of this section, except as otherwise provided. Paragraph (h)(6) of this section provides rules for allocating income attributable to functionally related activities of a nonthrift based upon the relative reductions to thrift income made on account of that nonthrift.

(2) *Allocation of tentative taxable loss of other thrifts.* For purposes of paragraph (f)(1)(i) of this section, a thrift's allocable share of another thrift's tentative taxable loss is the loss multiplied by a fraction. The numerator of the fraction is the tentative taxable income (if greater than zero) of the thrift, and the denominator is the aggregate of such tentative taxable income of each thrift.

(3) *Allocation of portions of a consolidated net operating loss deduction.* (i) For purposes of paragraph (f)(1)(ii) of this section, a first thrift's allocable share of the portion of the consolidated net operating loss deduction attributable to another thrift is determined under paragraph (h)(2) of this section as if that portion were a tentative taxable loss of that other thrift and by computing tentative taxable income under such paragraph (h)(2) by taking into account paragraph (f)(1)(i) of this section. A thrift's allocable share of the portion of the consolidated net operating loss deduction attributable to that thrift is equal to that entire portion.

(ii) For purposes of paragraph (f)(1)(iv) of this section, a thrift's allocable share of the portion of a consolidated net operating loss deduction attributable to functionally related activities of a nonthrift (determined under paragraph (h)(5) of this section) is determined under paragraph (h)(4) of this section as if that portion were a loss attributable to functionally related activities of the nonthrift and by computing tentative taxable income under such paragraph (h)(4) by taking into account paragraph (f)(1) (i), (ii), and (iii) of this section.

(iii) This subdivision (iii) prevents the ''double-counting'' of losses. The reduction to the tentative taxable income of a thrift is diminished to the extent the loss that gave rise to the reduction has previously been taken into account in reducing a thrift's tentative taxable income. Thus, any loss taken into account as a reduction to a thrift's separate taxable income under any subdivision of paragraph (f)(1) of this section shall be reduced (but not below zero) to the extent taken into account:

(A) In a prior consolidated return year under any subdivision of such paragraph (f)(1) or

(B) In the current consolidated return year under a previous subdivision of such paragraph (f)(1).

(4) *Allocation of loss attributable to functionally related activities of a nonthrift.* For purposes of paragraph (f)(1)(iii) of this section, a thrift's allocable share of a loss attributable to functionally related activities of a nonthrift is determined by multiplying the loss by a fraction. The numerator of the fraction is the tentative taxable income (if greater than zero) of the thrift (taking into account paragraph (f)(1) (i) and (ii) of this section) and the denominator is the aggregate of such tentative taxable income (so determined) of each thrift.

(5) *Portion of the consolidated net operating loss deduction attributable to functionally related activities of a particular nonthrift.* The portion of the consolidated net operating loss deduction attributable to functionally related activities of a particular nonthrift is the lesser of the following two amounts:

(i) The portion of the consolidated net operating loss deduction attributable to that nonthrift.

(ii) The aggregate of the losses attributable to functionally related activities of that nonthrift for the taxable years in which the consolidated net operating loss deduction arose.

(6) *Allocation of income attributable to functionally related activities of a nonthrift.* For purposes of paragraph (f)(2)

of this section, a thrift institution's allocable share of the income attributable to functionally related activities of a nonthrift is determined by multiplying that income by a fraction. The numerator of the fraction is the amount of the cumulative reductions referred to in paragraph (f)(2)(ii) of this section (minus the cumulative increases under paragraph (f)(2) of this section) made on account of that nonthrift for the thrift and the denominator is the sum of such cumulative reductions (minus such cumulative increases) made on account of that nonthrift for all thrifts.

(7) *Proper accounting* The provisions of section 482 apply in determining a thrift institution's tentative taxable income, and in determining the gross income and deductions attributable to functionally related activities. For example, an expense such as the salary of an individual who performs services for both a thrift and a nonthrift must be allocated in a manner that fairly reflects the value of the services rendered to each.

(i) [Reserved]

(j) *Examples*. The provisions of this section may be illustrated by the following examples. In each example the letter ''T'' for a member denotes a thrift and the letters ''NT'' denote a nonthrift. Also, in each example, a thrift loss includes a bad debt deduction under section 593(b) (other than paragraph (2) thereof) for such year and a thrift with income would have such a bad debt deduction of zero.

Example 1. (a) In 1983, corporations T1, T2, NT1, and NT2 are formed. These corporations constitute an affiliated group that files a consolidated return on the basis of a calendar year. For 1983, 1984, and 1985, the tentative taxable income (or loss) of each member (before the application of paragraph (f) of this section) is as follows:

	1983	1984	1985
NT1	$(60)	$(140)	$15
T1	1,000	500	750
NT2	(90)	(220)	150
T2	(300)	400	250

In 1983, NT1, in addition to its other business activities, acted as a collection agency for T1. Deductions attributable to those activities exceeded gross income attributable to those activities by $70. NT1's other activities generated a $10 gain. In 1984 and 1985, NT1 acted as a collection agency for T1 as its sole activity.

(b) The tentative taxable incomes of T1 and T2 for 1983 (determined under paragraph (e) of this section) as of the close of that year are adjusted by paragraph (f) of this section as follows:

(i) T1's tentative taxable income:		
T1's tentative taxable income (before the application of paragraph (f) of this section	.....	$1,000
Less:		
T2's tentative taxable loss	$300	.....
NT1's functionally related loss (limited by NT1's overall loss)	60	360
T1's tentative taxable income for 1983	.....	640

(ii) T2's tentative taxable income for 1983 is zero.

(c) The tentative taxable incomes of T1 and T2 for 1984 (determined under paragraph (e) of this section as of the close of that year) are adjusted by paragraph (f) of this section as follows:

(i) T1's tentative taxable income:

T1's tentative taxable income (before the application of paragraph (f) of this section)	$500
Less:	
T1's allocable portion of NT1's functionally related loss (140×500/(500+400))	78
T1's tentative taxable income for 1984	422

(ii) T2's tentative taxable income:	
T2's tentative taxable income (before the application of paragraph (f) of this section	400
Less:	
T2's allocable portion of NT1's functionally related loss (140×400/(500+400))	62
T2's tentative taxable income for 1984	338

(d) For 1985, the amount under paragraph (f) (2) of this section for both T1 and T2 is $15 (NT1's tentative taxable income from functionally related activities for 1985). For 1983 and 1984, T1's tentative taxable income was reduced by a total of $138 (*i.e.*, $60 + $78) due to NT1's losses from functionally related activities. For 1984, T2's tentative taxable income was reduced by $62 due to those losses. Accordingly, under paragraph (f)(2) of this section, T1's tentative taxable income for 1983 is increased by $10 (*i.e.*, $15x$138/($138+$62)) and T2's tentative taxable income is increased by $5 (*i.e.*, $15x$62/($138+$62)).

Example 2. (a) In 1983, corporations T, NT1, and NT2 are formed. these corporations constitute an affiliated group. NT2 provides computer services to T as its sole activity. For the calendar years 1983, 1984, and 1985, the group files a consolidated return. The tentative taxable income of each member (before the application of paragraph (f) of this section) is as follows:

	1983	1984	1985
T	$100	$0	$(200)
NT1	200	0	100

	1983	1984	1985
NT2	(20)	20	0

(b) Under paragraph (f)(1) of this section, T's tentative taxable income for 1983 (determined at the close of that year) is reduced to $80 (*i.e.*, $100 less NT2's $20 loss). For 1984, under paragraph (f)(2) of this section, T's tentative taxable income is increased by $20. For 1985, the consolidated net operating loss of $100 (all of which is attributable to T) is carried back to 1983. That $100 carryback is not limited by paragraph (f)(4)(iii) of this section, since consolidated taxable income for 1983 available for absorption after a bad debt deduction of $0 under section 593(b) (other than paragraph (2) thereof) for that year is $280. Accordingly, under paragraph (f)(1)(ii) of this section, T's tentative taxable income is reduced by the full $100, which is taken into account before the previous reduction of T's tentative taxable income under paragraph (f)(1)(iii) of this section. In addition, under paragraph (f)(3)(i) of this section, the group must file an amended return for 1984 to eliminate the increase to T's bad debt deduction for 1984 by reason of the consolidated net operating loss carryback to 1983.

Example 3. (a) T and NT are formed in 1983 and are the only members of an affiliated group filing a consolidated return on a calendar year basis. NT provided computer services to T as its sole activity. For 1983, 1984, and 1985, the tentative taxable income of T and NT (before the application of paragraph (f) of this section) is as follows:

	1983	1984	1985
T	$100	$0	$0
NT	0	40	(40)

(b) At the close of 1983, T's tentative taxable income is $100. For 1985, however, the group has a consolidated net operating loss of $40, all of which is attributable to NT's functionally related activities and which is carried back to 1983. However, T's tentative taxable income for 1983 is not reduced under paragraph (f)(1)(iv) of this section, since, under paragraph (f)(4)(iv) of this section, NT's 1984 income attributable to functionally related activities of $40 is netted against that $40 carryback.

Example 4. (a) In 1983, corporations T1, T2, NT1, and NT2 are formed. For calendar years 1983, 1984, and 1985, the affiliated group consisting of T1, T2, NT1, and NT2 filed a consolidated return. NT1 provided computer services to T1 as its sole activity. The tentative taxable income of each member (before the application of paragraph (f) of this section) is as follows:

	1983	1984	1985
T1	(50)	100	30
T2	(50)	(80)	(25)
NT1	(50)	(40)	(99)
NT2	120	30	100

(b) For 1983, the group has a consolidated net operating loss of $30, apportioned $10 each to T1, T2, and NT1 under §1.1502–79A(a)(3). For 1984, the only thrift with tentative taxable income greater than zero (before applying paragraph (f) of this section) is T1. That tentative taxable income of $100 is first reduced to $20 by T2's $80 1984 loss under paragraph (f)(1)(i) of this section. Next, T1's remaining tentative taxable income of $20 is reduced to $10 by the portions attributable to T1 and T2 of the 1983 consolidated net operating loss carryover to 1984 under paragraph (f)(1)(ii) of this section. The sum of those portions is limited to $10 (*i.e.*, $5 each) by paragraph (f)(4)(iii) of this section because 1984 consolidated taxable income available for absorption after a bad debt deduction under section 593(b) (other than paragraph (2) thereof) for each thrift member for that year is $10. For that reason, paragraph (f)(4)(iii) of this section also prevents any further portion of that carryover from being taken into account in 1984 as a reduction under paragraph (f)(1) of this section. T1's remaining tentative taxable income of $10 is reduced to zero, under paragraph (f)(1)(iii) of this section, by NT1's 1984 tentative taxable loss.

(c) For 1985, the only thrift with tentative taxable income greater than zero (before applying paragraph (f) of this section) is T1. T1's tentative taxable income for 1985 of $30 is reduced to $5 by T2's 1985 loss of $25 under paragraph (f)(1)(i) of this section. Next, the portions attributable to T1 and T2 of the consolidated net operating loss carryover from 1983 to 1985 for purposes of paragraph (f)(1)(ii) of this section must be determined. That determination is made without applying the rules for loss absorption in computing consolidated taxable income under §1.1502–21A(b)(3). Those portions are instead determined in 3 steps under paragraph (f)(4)(i) of this section. The first of those steps is to determine each of T1's and T2's attributable portions of the 1983 consolidated net operating loss which under §1.1502–79A(a)(3) is $10 or $20 for both thrifts. The second of those steps is to apply the anti-double counting rule under paragraph (h)(3)(iii) of this section to reduce that $20 amount by the $10 total of the two $5 portions attributable to T1 and T2 of the consolidated net operating loss carryover from 1983 to 1984 taken into account as reductions to T1's tentative taxable income for 1984 under paragraph (f)(1)(ii) of this section. That leaves a $10

total amount available to be taken into account as reductions to T1's remaining tentative taxable income of $5 for 1985 under paragraph (f)(1)(ii) of this section. Under the third of those steps that $10 amount, however, is limited, under the loss absorption limit of paragraph (f)(4)(iii) of this section, to the $6 of the 1983 consolidated net operating loss carryover to 1985 which is absorbed in computing consolidated taxable income for 1985 since 1985 consolidated taxable income available for absorption after a bad debt deduction under section 593(b) (other than paragraph (2) thereof) for that year is $6 (*i.e.,* $30+$100 − $99 − $25). Because separate taxable income cannot be reduced below zero under paragraph (f)(1) of this section, T1's remaining tentative taxable income of $5 is thus reduced to zero by the portions attributable to T1 and T2, respectively, of the consolidated net operating loss carryover from 1983 to 1985 under paragraph (f)(1)(ii) of this section.

(Sec. 1502, 7805, Internal Revenue Code of 1954 (68A Stat. 367 and 917; (26 U.S.C. 1502 and 7805))

[T.D. 7637, 44 FR 46841, Aug. 9, 1979, as amended by T.D. 7815, 47 FR 11516, Mar. 17, 1982; T.D. 7876, 48 FR 11258, Mar. 17, 1983; 48 FR 13165, Mar. 30, 1983; T.D. 8677, 61 FR 33324, June 27, 1996; T.D. 8823, 64 FR 36100, July 2, 1999]

§ 1.1502–43 Consolidated accumulated earnings tax.

(a) *Group subject to tax*—(1) *General rule.* For a group filing a consolidated return for the taxable year, the accumulated earnings tax under section 531 is imposed on consolidated accumulated taxable income (as defined in paragraph (b) of this section). This tax applies to any group that is formed or availed of to avoid or prevent the imposition of the individual income tax on the shareholders of either any of its members or any other corporation by permitting earnings and profits to accumulate instead of dividing or distributing them. Section 531 and this section do not apply to a group that is treated as a ''personal holding company'' under section 542(a)(1) as a result of the application of section 542(b)(1). Special rules are provided in this section for other groups which include one or more personal holding companies.

(2) *Evidence of purpose to avoid income tax.* (i) Under section 533(a), the fact that the group's earnings and profits are permitted to accumulate beyond the reasonable needs of its business is determinative of the purpose to avoid the income tax with respect to shareholders, unless the group by the preponderance of the evidence proves to the contrary.

(ii) The fact that a group is a mere holding or investment group is prima facie evidence of the group's purpose to avoid the income tax with respect to the shareholders. The activities of a member which is a personal holding company are not taken into account in determining if the group is a mere holding or investment group.

(3) *Earnings and profits.* For purposes of this paragraph (a) and paragraph (d) of this section, the following rules apply:

(i) If no member of the group is a personal holding company, the group's earnings and profits are the aggregate of the earnings and profits (or deficit) of each corporation that is a member at the close of the taxable year, determined in accordance with § 1.1502–33.

(ii) Earnings and profits resulting from the application of § 1.1502–33(b) are not taken into account.

(iii) Earnings and profits resulting from the disposition of a member's stock are determined without regard to the stock basis adjustments under §§ 1.1502–32 and 1.1502–33(c)(1).

(4) *Reasonable needs of the business.* The reasonable needs of the group's business include the reasonable needs of the business of any corporation (other than a personal holding company) that is a member at the close of the taxable year. Thus, the earnings and profits of one member may be accumulated with respect to the reasonable business needs of another member. If under § 1.537–3(b) the business of a nonmember corporation is considered the business of a member, then the earnings and profits of any member may be accumulated with respect to such nonmember's reasonable business needs.

(5) *Burden of proof.* The notification described in section 534(b) and the statement described in section 534(c) are made to or by the common parent corporation in accordance with § 1.1502–77.

(b) *Consolidated accumulated taxable income*—(1) *In general.* ''Consolidated

accumulated taxable income'' is the group's consolidated taxable income determined under § 1.1502–11 adjusted in the manner provided in paragraph (b)(2) of this section, minus the sum of—

(i) The consolidated dividends paid deduction determined under paragraph (c) of this section and

(ii) The consolidated accumulated earnings credit determined under paragraph (d) of this section.

(2) *Adjustments to consolidated taxable income.* For purposes of paragraph (b)(1) of this section, consolidated taxable income is adjusted as follows:

(i) Under section 535(b)(1), the deduction for taxes is the excess of—

(A) The consolidated liability for tax determined without § 1.1502–2 (b) through (d) and without the foreign tax credit provided by section 33, over

(B) The consolidated foreign tax credit determined pursuant to § 1.1502–4. Foreign taxes deductible under § 1.535–2(a)(2) are also allowed as a deduction under section 535(b)(1).

(ii) The consolidated charitable contributions deduction under § 1.1502–24 does not apply. Under section 535(b)(2), there shall be allowed the aggregate charitable contributions of the members allowable under section 170, determined without section 170 (b)(2) and (d)(2).

(iii) Under section 535(b)(3), the deductions provided in §§ 1.1502–26 and 1.1502–27 are not allowed.

(iv) Under section 535(b)(4), the consolidated net operating loss deduction described in §§ 1.1502–21(a) or 1.1502–21A(a), as appropriate is not allowed.

(v) Under section 535(b)(5), there is allowed as a deduction the consolidated net capital loss, determined under §§ 1.1502–22(a) or 1.1502–22A(a), as appropriate .

(vi) Under section 535(b)(6), there is allowed as a deduction an amount equal to (A) the excess of the consolidated net long-term capital gain (determined under §§ 1.1502–22(a) or 1.1502–41A, as appropriate over the consolidated net short-term capital loss (determined under §§ 1.1502–22T(a) or 1.1502–41A, as appropriate), minus (B) the taxes attributable to this excess. This consolidated net short-term capital loss is determined without the consolidated net capital loss carryovers or carrybacks to the taxable year.

(vii) Under section 535(b)(7), the consolidated net capital loss carryovers and carrybacks are not allowed. See §§ 1.1502–22(b) or 1.1502–22A(b), as appropriate.

(viii) Sections 1.1502–15A (Limitations on built-in deductions not subject to § 1.1502–15) and 1.1502–15 do not apply.

(3) *Personal holding company a member.* If a member is a personal holding company for the taxable year—

(i) [Reserved]

(ii) In applying paragraph (b)(2)(i) of this section, consolidated liability for tax (as determined under that paragraph (b)(2)(i)) is reduced by the portion thereof allocable to that member under section 1552(a) (1), (2), (3), or (4) (or § 1.1502–33(d)), whichever is applicable. The consolidated foreign tax credit is computed by excluding the taxable income and any foreign taxes paid or accrued by that member, and foreign taxes deductible under § 1.535–2(a)(2) do not include foreign taxes attributable to that member.

(c) *Consolidated dividends paid deduction*—(1) *General rule.* For purposes of this section, the consolidated dividends paid deduction is the aggregate of the members' deductions under section 561(a) (1) and (2). This deduction is determined by excluding deductions for dividends paid to other members.

(2) *Exception for certain personal holding companies.* [Reserved]

(3) *Dividends paid defined.* For purposes of this paragraph (c), ''dividends paid'' and ''dividend (or portion thereof) paid'' include amounts treated as dividends paid during the taxable year under sections 562(b)(1), 563, and 565 (relating respectively to liquidating distributions, dividends paid after year end, and consent dividends).

(4) *Examples.* This paragraph (c) can be illustrated by the following examples:

Example 1. Corporations P and S constitute an affiliated group which files a consolidated return on a calendar year basis for 1984 and 1985. P owns all of S's stock and two individuals own all of P's stock. Neither member of the group is a personal holding company for 1984. Assume that on December 15, 1984, S pays a dividend (as defined in section 316 (a)) of $2,000 to P, and P pays a dividend (as so defined) of $3,000 on January 15, 1985, to its

individual shareholders. All dividends are paid in cash and are pro rata with no preference as to any shares or class of stock. For purposes of this paragraph (c), the consolidated dividends paid deduction for 1984 is $3,000, *i.e.*, the dividend paid on January 15, 1985, by P to its nonmember shareholders. See section 563 (a). The $2,000 dividend paid by S to P is not taken into account in computing the consolidated dividends paid deduction.

Example 2. [Reserved]

(d) *Consolidated accumulated earnings credit*—(1) *In general.* [Reserved]

(2) *Special rule if a consolidated group is part of a controlled group.* If a consolidated group is treated collectively as being one component member of a controlled group, or if each member of a consolidated group is treated as being a separate component member of a controlled group, see section 1561 for determining the portion of the accumulated earnings credit to be allocated to such group or to such members.

(e) *Effective/applicability date.* This section applies to any consolidated Federal income tax return due (without extensions) on or after December 21, 2009. However, a consolidated group may apply this section to any consolidated Federal income tax return filed on or after December 21, 2009. For returns due before December 21, 2009, see § 1.1502–43T as contained in 26 CFR part 1 in effect on April 1, 2009.

[T.D. 7937, 49 FR 3462, Jan. 27, 1984, as amended by T.D. 8560, 59 FR 41674, Aug. 15, 1994; T.D. 8677, 61 FR 33324, June 27, 1996; T.D. 8560, 62 FR 12098, Mar. 14, 1997; T.D. 8823, 64 FR 36100, July 2, 1999; T.D. 9304, 71 FR 76907, Dec. 22, 2006; T.D. 9476, 74 FR 68532, Dec. 28, 2009]

§ 1.1502–44 Percentage depletion for independent producers and royalty owners.

(a) *In general.* The sum of the percentage depletion deductions for the taxable year for all oil or gas property owned by all members, plus any carryovers under section 613A(d)(1) or paragraph (d) of this section from a prior taxable year, may not exceed 65 percent of the group's adjusted consolidated taxable income (under paragraph (b) of this section) for the consolidated return year.

(b) *Adjusted consolidated taxable income.* For purposes of this section, adjusted consolidated taxable income is an amount (not less than zero) equal to the group's consolidated taxable income determined without:

(1) Any depletion with respect to an oil or gas property (other than a gas property with respect to which the depletion allowance for all production is determined pursuant to section 613A(b)) for which percentage depletion would exceed cost depletion in the absence of the depletable quantity limitations contained in section 613A(c) (1) and (6) and the consolidated taxable income limitation contained in paragraph (a) of this section.

(2) Any consolidated net operating loss carryback to the consolidated return year under §§ 1.1502–21 or 1.1502-21A (as appropriate) and

(3) Any consolidated net capital loss carryback to the consolidated return year under §§ 1.1502–22 or 1.1502-22A (as appropriate).

(c) *Allocation to oil and gas properties.* The maximum amount allowable as a deduction under section 613A(c), after the application of paragraph (a) of this section, is allocated to properties held by members in accordance with the regulations under section 613A(d). Those regulations provide for an initial allocation and possible reallocation of the maximum allowable percentage depletion deduction among oil and gas properties. Thus, if, after the initial allocation, cost depletion exceeds the percentage depletion that would be allowable for a particular oil or gas property, cost depletion must be used for that property and the maximum amount of percentage depletion allowable as a deduction for the group is reallocated among only the remaining properties held by all members.

(d) *Carryover for disallowed amounts.* (1) If any amount is disallowed as a deduction for the taxable year by reason of section 613A(d)(1) or paragraph (a) of this section, the disallowed amount for each oil or gas property is treated as an amount allowed as a deduction under section 613A(c), for the following taxable year for the member that owned the property, in accordance with the regulations under section 613A and paragraphs (a) and (d)(2) of this section.

(2) Any amount that was disallowed as a deduction in a separate return limitation year of a member may be carried to a consolidated return year only to the extent that 65 percent of the excess determined under paragraph (d)(3) of this section exceeds the sum of the otherwise allowable percentage depletion deductions for the member's oil and gas properties for the year.

(3) The excess determined in this subparagraph (3) for a member is the excess, if any, of adjusted consolidated taxable income for the year under paragraph (b) of this section over that income recomputed by excluding the items of income and deductions of the member.

(e) *Effective date*. This section applies to taxable years for which the due date (without extensions) for filing returns is after September 30, 1980.

[T.D. 7725, 45 FR 65561, Oct. 3, 1980, as amended by T.D. 8677, 61 FR 33324, June 27, 1996; T.D. 8823, 64 FR 36100, July 2, 1999]

§ 1.1502–47 Consolidated returns by life- nonlife groups.

(a) *Scope*—(1) *In general*. Under section 1504(b)(2), insurance companies that are taxed under section 802 or 821 (relating respectively to life insurance companies and to certain mutual insurance companies) are not treated as includible corporations for purposes of determining under section 1504(a) the existence of an affiliated group and the composition of its membership. Section 1504(c)(2) provides an election whereby certain life insurance companies and mutual insurance companies may be treated as includible corporations, and thus members, of a group composed of other includible corporations. This section provides regulations for the making of this election and for the determination of an electing group's composition and its consolidated tax liability.

(2) *General method of consolidation*—(i) *Subgroup method*. The regulations adopt a subgroup method to determine consolidated taxable income. One subgroup is the group's nonlife companies (including those taxable under section 821). The other subgroup is the group's life insurance companies. Initially, the nonlife subgroup computes nonlife consolidated taxable income and the life subgroup computes consolidated partial life insurance company taxable income. A subgroup's income may in effect be reduced by a loss of the other subgroup. The life subgroup losses consist of consolidated loss from operations and life consolidated net capital loss. The nonlife subgroup losses consist of nonlife consolidated net operating loss and nonlife consolidated net capital loss. Consolidated taxable income is therefore defined in pertinent part as the sum of nonlife consolidated taxable income and consolidated partial life insurance company taxable income reduced by life subgroup losses or nonlife subgroup losses.

(ii) *Subgroup loss*. A subgroup loss does not actually affect the computation of nonlife consolidated taxable income or consolidated partial life insurance company taxable income. It merely constitutes a bottom-line adjustment in reaching consolidated taxable income. Furthermore, one subgroup's loss must first be carried back against income of the same subgroup before it may be used as a setoff against the second subgroup income in the taxable year the loss arose. (See section 1503(c)(1)). The carryback of the losses from one subgroup may not be used to offset income of the other subgroup in the year to which the loss is to be carried. This carryback of the first subgroup's loss may ''bump'' the second subgroup's loss that in effect previously reduced the income of the first subgroup. The second subgroup's loss that is bumped in appropriate cases may in effect reduce a succeeding year's income of the second or first subgroup. This approach gives the group the tax savings of the use of losses but the bumping rule assures that insofar as possible life deductions will be matched against life income and nonlife deductions against nonlife income.

(iii) *Carryover of subgroup loss*. A subgroup's loss may be used in a succeeding year, but in any particular succeeding year the loss must be used to reduce the income of the same subgroup before it may be used as a setoff against the other subgroup's income.

(3) *Authority*. This section is prescribed under the authority of sections 1502, 1503(c), 1504(c)(2), and 7805(b).

(4) *Other provisions*. The provisions of §§ 1.1502–1 through 1.1502–80 apply unless this section provides otherwise. Further, unless otherwise indicated in this section, a term used in this section has the same meaning as in sections 801–844.

(b) *Effective dates*—(1) *General rule*. This section is effective for taxable years for which the due date (without extensions) for filing returns is after March 14, 1983, except as provided in paragraph (b)(2) of this section.

(2) *Tacking rule effective dates*—(i) *In general*. Paragraph (d)(12)(v) of this section applies to any original consolidated Federal income tax return due (without extensions) after July 20, 2007.

(ii) *Prior law*. For original consolidated Federal income tax returns due (without extensions) after April 25, 2006, and on or before July 20, 2007, see § 1.1502–47T as contained in 26 CFR part 1 in effect on April 1, 2007. For original consolidated Federal income tax returns due (without extensions) on or before April 25, 2006, see § 1.1502–47 as contained in 26 CFR part 1 in effect on April 1, 2006.

(c) *Cross references*. The following table provides cross references for some of the definitions and operating rules that are relevant in making the election and determining the group's composition and its tax liability:

Item and Paragraph
General definitions (d).
Eligible corporation (Five-year rules) (d)(12).
Election (e).
Consolidated taxable income (g).
Nonlife consolidated taxable income (h).
Consolidated partial life insurance company taxable income (j).
Nonlife subgroup losses (m).
Life subgroup losses (n).
Alternative tax (o).

(d) *Definitions*. For purposes of this section:

(1) *Life insurance company*. The term ''life company'' means a life insurance company as defined in section 801. Section 801 applies to each company separately.

(2) *Mutual insurance company*. The term ''mutual company'' means a mutual insurance company taxable under section 821(a)(1).

(3) *Life insurance company taxable income*. The term ''life insurance company taxable income'' is referred to as LICTI. The terms ''TII'', ''GO'', and ''LO'' refer, respectively, to taxable investment income (section 804), gain from operations (section 809), and loss from operations (section 812). The term ''consolidated partial LICTI'' refers to consolidated LICTI without section 802(b)(3).

(4) *Group*. The term ''group'' means an affiliated group of corporations (as defined in section 1504(a)). Unless otherwise indicated in this section, a group's composition is determined without section 1504(b)(2).

(5) *Member*. The term ''member'' means a corporation (including the common parent) that is an includible corporation in the group. A life company or mutual company is tentatively treated as a member for any taxable year for purposes of determining if it is an eligible corporation under paragraph (d)(12) of this section and therefore if it is an includible corporation under section 1504(c)(2). If such a company is eligible and includible (under section 1504(c)(2)), it will actually be treated as a member of the group.

(6) *Life member*. A life member is a member of the group that is a life company.

(7) *Nonlife member*. A nonlife member is a member of the group that is not a life company.

(8) *Life subgroup*. A life subgroup is composed of those members that are life members. If the group has only one life member, it constitutes a life subgroup.

(9) *Nonlife subgroup*. A nonlife subgroup is composed of those members that are nonlife members. If the group has only one nonlife member, it constitutes a nonlife subgroup.

(10) *Separate return year*. The term ''separate return year'' means a taxable year of a corporation for which it files a separate return or for which it joins in the filing of a consolidated return by another group. For purposes of this subparagraph (10), the term ''group'' is defined with regard to section 1504(b)(2) for years in which an election under section 1504(c)(2) is not in effect. Thus, a separate return year

includes a taxable year for which that election is not in effect.

(11) *Separate return limitation year.* Section 1.1502–1(f)(2) provides exceptions to the definition of the term ''separate return limitation year''. For purposes of applying those exceptions to this section, for taxable years ending after December 31, 1980, the term ''group'' is defined without regard to section 1504(b)(2) and the definition in this subparagraph (11) applies separately to the nonlife subgroup in determining nonlife consolidated taxable income under paragraph (h) of this section and to the life subgroup in determining consolidated partial LICTI under paragraph (j) of this section. Paragraph (m)(3)(ix) of this section defines the term ''separate return limitation year'' for purposes of determining whether the losses of one subgroup may be used against the income of the other subgroup.

(12) *Eligible corporations*—(i) *In general.* A corporation is an eligible corporation for a taxable year of a group only if, throughout every day of the base period the corporation:

(A) Was in existence and a member of the group determined without the exclusions in section 1504(b)(2) (see paragraphs (d)(12) (iii) through (vi) of this section),

(B) Was engaged in the active conduct of a trade or business (''active business''),

(C) Did not experience a change in tax character (see paragraph (d)(12)(vii) of this section), and

(D) Did not undergo disproportionate asset acquisitions (see paragraph (d)(12)(viii) of this section).

(ii) *Base period.* The base period consists of the common parent's five taxable years immediately preceding the group's taxable year for which the consolidated return and the determination of eligibility are made. Eligibility is determined for each consolidated return year beginning with the first year for which the election under section 1504(c)(2) is effective.

(iii) *In existence.* Except as provided in paragraphs (d)(12) (v) and (vi) of this section, a corporation organized after the base period begins is not eligible even though it is a member of the group immediately after its organization. For purposes of this subdivision (iii), a corporation that was a party to a reorganization described in section 368(a)(1)(F) shall be treated as the same entity both before and after the reorganization.

(iv) *Membership period.* Except as provided in paragraphs (d)(12) (v) and (vi) of this section, a corporation must have been a member of the group throughout the base period to be eligible. Thus, an ineligible corporation includes one whose stock was acquired from outside the group at any time during the base period or one which was a member of a different group (whether by application of reverse acquisition rules in §1.1502–75(d)(3) or otherwise) at any time during the base period. For purposes of this subdivision (iv), the common parent of a group is treated as constituting a group (and hence is a member) during any period when it was not a member of an affiliated group within the meaning of section 1504(a) (applied without section 1504(b)(2)).

(v) *Tacking rule.* The period during which an old corporation is in existence and a member of the group engaged in active business is included in (or tacks onto) the period for the new corporation if the following four conditions listed in this paragraph (d)(12)(v) are met. For purposes of this paragraph (d)(12)(v), a new corporation is a corporation (whether or not newly organized) during the period its eligibility depends upon the tacking rule. The four conditions are as follows—

(A) The first condition is that, at any time, 80 percent or more of the new corporation's assets it acquired (other than in the ordinary course of its trade or business) were acquired from the old corporation in one or more transactions described in section 351(a) or 381(a). This asset test is applied by using the fair market values of assets on the date they were acquired and without regard to liabilities. Assets acquired in the ordinary course of business will be excluded from total assets only if they were acquired after the new corporation became a member of the group (determined without section 1504(b)(2)). In addition, assets that the old corporation acquired from outside

the group in transactions not conducted in the ordinary course of its trade or business are not included in the 80 percent (but are included in total assets) if the old corporation acquired those assets within five calendar years before the date of their transfer to the new corporation.

(B) The second condition is that at the end of the taxable year during which the first condition is first met, the old corporation and the new corporation must both have the same tax character. For purposes of this paragraph (d)(12), a corporation's tax character is the section under which it would be taxed (i.e., sections 11, 802, 821, or 831) if it filed a separate return. If the old corporation is not in existence (or adopts a plan of complete liquidation) at the end of that taxable year, this paragraph (d)(12)(v)(B) will apply to the old corporation's taxable year immediately preceding the beginning of the taxable year during which the first condition is first met.

(C) The third condition is that, at the end of the taxable year during which the first condition is first met, the new corporation does not undergo a disproportionate asset acquisition under paragraph (d)(12)(viii) of this section.

(D) The fourth condition is that, if there is more than one old corporation, the first two conditions apply to all of the corporations. Thus, the second condition (tax character) must be met by all of the old corporations transferring assets taken into account in meeting the test in paragraph (d)(12)(v)(A) of this section.

(vi) *Old group remaining in existence.* If the common parent of a group (or a new common parent) became the common parent in a transaction described in §1.1502–75 (d)(2) or (d)(3) where a group remained in existence, then paragraph (d)(12) (ii) through (iv) of this section apply by treating that common parent as if it were also the previous common parent of the group that remains in existence. If this paragraph (d)(12)(vi) applies to a transaction, the tacking rule in paragraph (d)(12)(v) of this section does not apply to the transaction.

(vii) *Change in tax character.* A corporation must not experience during the base period a change in tax character (as defined in paragraph (d)(12)(v)(B) of this section) if the change is attributable to an acquisition of assets from outside the group in transactions not conducted in the ordinary course of its trade or business. However, if a new corporation relies on the tacking rules in paragraph (d)(12)(v) of this section, this paragraph (d)(12)(vii) shall apply during the base period and the current consolidated return year and even if the change in tax character is attributable to an asset acquisition from within the group.

(viii) *Disproportionate asset acquisition.* To be eligible, a corporation must not undergo during the base period disproportionate asset acquisitions which are attributable to an acquisition (or a series of acquisitions) of assets from outside the group in transactions not conducted in the ordinary course of its trade or business (special acquisition). Whether special acquisitions are disproportionate is determined at the end of each base period. Whether an acquisition results in a disproportionate asset acquisition depends on all of the facts and circumstances including the following factors and rules:

(A) One factor is the portion of the insurance reserves (*i.e.*, total reserves in section 801 (c)) of the acquiring company at the end of the base period which is attributable to special acquisitions.

(B) A second factor is the portion of the fair market value of the assets (without reduction for liabilities) of the acquiring company at the end of the base period that is attributable to special acquisitions.

(C) A third factor is the portion of the premiums generated during the last taxable year of the base period which are attributable to special acquisitions.

(D) A corporation will not experience a disproportionate asset acquisition unless 75 percent of one factor (whether or not listed in this subdivision (viii)) is attributable to special acquisitions.

(E) Money or other property contributed to a corporation by a shareholder that is not a member of the group (without section 1504(b)(2)) is not a special acquisition.

(F) If a new corporation relies on the tacking rules in paragraph (d)(12)(v) of

this section, this subdivision (viii) applies to that corporation during a consolidated return year. Thus, if at any time during a consolidated return year, a new corporation undergoes a disproportionate asset acquisition, the corporation becomes ineligible at that time.

(13) *Ineligible corporation.* A corporation that is not an eligible corporation is ineligible. If a life company or mutual company is ineligible, it is not treated under section 1504(c)(2) as an includible corporation. Losses of a nonlife member arising in years when it is ineligible may not be used under section 1503(c)(2) and paragraph (m) of this section to set off the income of a life member. If a life or mutual company is ineligible and is the common parent of the group (without section 1504(b)(2)), the election under section 1504(c)(2) may not be made.

(14) *Illustrations.* The following examples illustrate this paragraph (d). In each example, L indicates a life company, another letter indicates a nonlife company, and each corporation uses the calendar year as its taxable year.

Example 1. P has owned all of the stock of S since 1913. On January 1, 1980, P purchased all of the stock of L_1 which owns all of the stock of L_2 and S_2. L_1 and L_2 are treated as members for purposes of determining if they are eligible for 1982. However, for 1982, L_1, L_2, and S_2 are ineligible because none of them has been a member of the group for P's five taxable years preceding 1982. For 1982, L_1 and L_2 may elect to file a consolidated return because they constitute an affiliated group under section 1504(c)(1), and P and S may file a consolidated return.

Example 2. Since 1974, P has been a mutual insurance company owning all the stock of L_1. In 1980, P transfers assets to S_1, a new stock casualty company subject to taxation under section 831(a). For 1982, only P and L_1 are eligible corporations. The tacking rule in paragraph (d)(12)(v) of this section does not apply in 1982 because the old corporation (P) and the new corporation (S_1) do not have the same tax character. The result would be the same if P were a life company.

Example 3. Since 1974, L has owned all the stock of L_1 which has owned all the stock of S_1, a stock casualty company. L_1 writes some accident and health insurance business. In 1980, L_1 transfers this business, and S_1 transfers some of its business, to a new stock casualty company, S_2., in a transaction described in section 351 (a). The property transferred to S_2. by L_1 had a fair market value of $50 million. The property transferred by S_1 had a fair market value of $40 million. S_2. is ineligible for 1982 because the tacking rule in paragraph (d)(12)(v) of this section does not apply. The old corporations (L_1 and S_1) and the new corporation (S_2.) do not all have the same tax character. See subparagraph (d)(12)(v)(B) and (E) of this section. The result would be the same if L_1 transferred other property (e.g., stock and securities) with the same value, rather than accident and health insurance contracts, to S_2.

Example 4. Since 1974, P has owned all the stock of S and L_1. L_1 is a large life company engaged in active business since 1974. On January 1, 1982, L_1 transfers in a section 351 (a) transaction assets (not acquired from outside the group) to a new life company, L_2. For 1982, L_2 is eligible because under paragraph (d)(12)(v) of this section, L_2 is considered to have been in existence and a member of the group engaged in the active business since 1974 which is the period L_1, the old corporation, was in existence and a member of the group so engaged.

Example 5. The facts are the same as in example (4). Assume that the fair market value of the assets L_1 transferred to L_2 was $10 million on January 1, 1982 and that L_2 acquired no other assets prior to June 30, 1983. Assume further that on January 1, 1983, L_1 acquires (other than in the ordinary course of its trade or business) assets having a fair market value of $40 million from L_3, an unrelated life company. On June 30, 1983, L_1 transfers those assets to L_2. L_2 becomes ineligible on June 30, 1983. Since by fair market values, 80 percent (*i.e.*, 40/50) of L_2's assets are attributable to special acquisitions, L_2 has undergone a disproportionate asset acquisition at that time. See paragraph (d)(12)(viii)(B), (D), and (F) of this section.

Example 6. The facts are the same as in example (5) except that L_1 transfers assets (other than life insurance contracts) having a fair market value of $40 million to L_2 and L_2 purchases the assets of L_3 on June 30, 1983. the result of the 1983 acquisition is the same as in example (5).

Example 7. The facts are the same as in example (5) except the acquired assets acquired by L_2 in 1983 from L_1 have a fair market value of $20 million. In 1983, L_2 had $1 million of premiums on its pre-existing contracts but premiums generated by the acquired business for the entire year would have been $2 million. L_2 is eligible in 1983 because it did not experience a disproportionate asset acquisition on June 30, 1983.

Example 8. Since 1974, L, a State A corporation, has owned all of the stock of L_1 and S_1. On January 1, 1982, L merges into L_3, a smaller State B corporation, which owns the stock of S_2. The transaction is a reverse acquisition described in §1.1502–75(d)(3) and the group of which L was the common parent remains in existence. Under paragraph

(d)(12)(vi) of this section, L_3 is eligible for 1982. However, S_2 is ineligible in 1982 under paragraph (d)(12)(iv) of this section.

Example 9. The facts are the same as in example (8) except that L acquires the stock of L_3. L_3 and S_2 are both ineligible for 1982. On January 1, 1983, the fair market value of L_3's assets are $5 million (without liabilities) and on that date L transfers assets (not acquired from outside the group) having a fair market value of $95 million (without liabilities) to L_3. L and L_3 are life companies at the end of 1983. L_3 is eligible in 1983 under the tacking rule in paragraph (d)(12)(v) of this section. S_2 is ineligible in that year. The result would be the same if L_3 was not a life company prior to January 1, 1983. See paragraph (d)(12)(v)(B) of this section.

Example 10. Since 1974, X, a foreign corporation, has owned all the stock of S_2 and S_1, and S_1 has owned all of the stock of L_1. On January 1, 1982, X incorporates a new U.S. company P, and transfers the stock of S_1 and S_2 to P. Assume that under §1.1502–75(d)(3) (relating to reverse acquisitions), the S_1–L_1 affiliated group remains in existence. Under paragraph (d)(12)(vi) of this section, P, S_1, and L_1 are eligible but S_2 is ineligible. The result would be the same if X were an individual.

Example 11. The facts are the same as in *Example (10)* except that X owns all of the stock of S_1, L_1, and S_2. In addition, on January 1, 1982, X transfers the stock of S_1 and S_2 to L_1. L_1 is eligible in 1982 under paragraph (d)(12)(iv) of this section. L_1 would still be eligible even if it owned a subsidiary during the base period but sold the subsidiary prior to January 1, 1982. S_1 and S_2 are ineligible in 1982.

Example 12. Since 1974, S_1 has owned all of the stock of L_1. S_2, an unrelated company, has owned all of the stock of L_2 and S_3 for 10 years. S_1 and S_2 are active stock casualty companies and not holding companies. On January 1, 1982, S_1 and S_2 merge into a new casualty company, S, in a transaction described in §1.1502–75(d)(3) so that the group of which S_1 was the common parent remains in existence. S and L_1 are eligible in 1982 under paragraph (d)(12)(vi) of this section. L_2 and S_3 are ineligible.

Example 13. The facts are the same as in *Example (12)* except that S_2 (the first corporation in §1.1502–75(d)(3)) acquires the stock of S_1 in exchange for the stock of S_2. The result is that only S_2, S_1, and L_1 are eligible in 1982.

Example 14. Since 1974, S had owned all of the stock of L_1. L_1 is a large life company. On January 1, 1982, L_1 incorporates L_2 and transfers $40 million in cash and securities to L_2 in a transaction described in section 351(a). On March 1, 1982, L_2 purchases the assets of L_3, an unrelated life company. The purchased assets have a fair market value (without liabilities) of $30 million on March 1, 1982. L_2 is ineligible for 1982 because the tacking rule in §1.1502–47T(d)(12)(v) does not apply. L_2 experienced a disproportionate asset acquisition in 1982. See §1.1502–47T(d)(12)(v)(C).

(e) *Election*—(1) *In general*. The election under section 1504(c)(2) may not be made if the group's common parent is an ineligible life company or an ineligible mutual company. The election under section 1504(c)(2) may only be made by the common parent of the group (as defined in section 1504(c)(2) without the exclusions in section 1504(b)(2)). For example, assume that P owns all of the stock of L_1, an eligible life company, which owns the stock of S_1. Assume further that P also owns the stock of L_2, an ineligible life member, which (for more than five years) has owned the stock of a nonlife company, S_2. Only P may make the election and, if it does so, P, L_1, and S_1 may file a consolidated return under this section. L_2 may not make the election under section 1504(c)(2) and may not file a consolidated return with S_2.

(2) *How election is made*—(i) *General rule*. The election under section 1504(c)(2) is generally made by the group's common parent in the same manner (and it has the same effect) as the election to file a consolidated return is made under §1.1502–75 (a) and (b) for a group which did not file a consolidated return for the immediately preceding taxable year. The procedure for making the election under section 1504(c)(2) is the same whether or not a consolidated return was filed by the life members or the nonlife members for the immediately preceding taxable year.

(ii) *Special rule*. Notwithstanding the general rule, however, if the nonlife members in the group filed a consolidated return for the immediately preceding taxable year and had executed and filed a Form 1122 that is effective for the preceding year, then such members will be treated as if they filed a Form 1122 when they join in the filing of a consolidated return under section 1504(c)(2) and they will be deemed to consent to the regulations under this section. However, an affiliation schedule (Form 851) must be filed by the group and the life members must execute a Form 1122 in the manner prescribed in §1.1502–75(h)(2).

(3) *Irrevocability*. Except as provided in § 1.1502–75(c) and paragraph (e)(4) of this section, the election under section 1504(c)(2) is irrevocable.

(4) *Permission to discontinue*—(i) *General rule*. A ''section 1504(c)(2) group'' with a common parent that has made the election to file a consolidated return under section 1504(c)(2) in a previous taxable year is granted permission to elect (under § 1.1502–75(c)(2)(ii)) to discontinue filing such a consolidated return for that group's first taxable year for which the regulations under this section are effective. This election to discontinue shall be exercised in the time and manner prescribed in § 1.1502–75(c)(3), except that the group's common parent shall exercise this election to discontinue (and the other members of the section 1504(c)(2) group must comply with this election) by filing appropriate returns. For purposes of this paragraph (e)(4), an appropriate return is either a separate return or a consolidated return that is filed by newly exercising the privilege under § 1.1502–75(a)(1).

(ii) *Types of groups*. (A) A ''section 1504(c)(2) group'' is an affiliated group which files or filed a consolidated return pursuant to an election under section 1504(c)(2).

(B) A ''limited group'' is an affiliated group (determined without section 1504(c)(2)) having at least one member which was a member of a section 1504(c)(2) group on the date that the section 1504(c)(2) group elected to discontinue under paragraph (e)(4)(i) of this section.

(iii) *Effect on restoration rules*. If a group ceases to file a consolidated return or terminates or if a member leaves the group, certain items of income, gain, or loss on transactions between members are taken into account under §§ 1.1502–13, 1.1502–18, and 1.1502–19 (''restoration rules''). For purposes of applying these restoration rules solely by reason of an election under paragraph (e)(4)(i) or (e)(4)(v)(A) of this section to discontinue filing consolidated returns as a section 1504(c)(2) group, the following rules apply:

(A) The section 1504(c)(2) group shall not be considered to terminate and no member of that group shall be treated as ceasing to be a member.

(B) Members of that section 1504(c)(2) group that are included in the consolidated return of a limited group for the first taxable year for which the discontinuance is effective shall be considered to be filing a consolidated return as a continuation of the section 1504(c)(2) group. However, a corporation that is not a member of a particular limited group for that taxable year is considered to have a separate return year (and, for purposes of § 1.1502–19(c), not to be a member of a group filing a consolidated return) with respect to that limited group's members.

(C) Section 1.1502–13 shall be applied without regard to paragraph (f)(1)(vii).

(iv) *Illustrations*. The following examples illustrate paragraph (e)(4)(i)–(iii) of this section. In these examples, L indicates a life company and another letter indicates a nonlife company. All corporations use the calendar year as the taxable year. For all taxable years involved, P owns all the stock of L_1 and of S, L_1 owns all the stock of L_2, L_2 owns all the stock of L_3, and S owns all the stock of L_4. For 1981, P makes the life-nonlife election of section 1504(c)(2) and L_4 is an eligible corporation. For 1982, P makes the election to discontinue filing consolidated returns under section 1504(c)(2) in accordance with the permission granted in this paragraph (e)(4).

Example 1. L_1, L_2, and L_3 were eligible members. For 1982, P and S may either file separate returns or may file, as a limited group, a consolidated return. Similarly, L_1, L_2, and L_3 may either file separate returns or may file a consolidated return as a limited group under section 1504(c)(1). L_4 must file a separate return.

Example 2. For 1981, L_1 was an ineligible member and L_1, L_2, and L_3 filed a consolidated return under section 1504(c)(1). For 1982, L_1, L_2, and L_3 must continue filing a consolidated return under section 1504(c)(1).

Example 3. For 1981, L_1 was an eligible member and L_2 and L_3 were ineligible members. For 1982, L_1, L_2, and L_3 either must each file a separate return or must file a consolidated return as a limited group under section 1504(c)(1) having L_1 as a common parent.

Example 4. The facts are the same as in example (3). Assume further that for 1981, L_2 and L_3 file a consolidated return. During 1981, intercompany transactions (see § 1.1502–13) occur in the life-nonlife group between P and L_1, between P and S, and between S and L_4 and occur in the ineligible life subgroup

between L_2 and L_3. For 1982, the restoration rules of § 1.1502–13, as modified by paragraph (e)(4)(iii)(B) of this section, will be applicable as indicated in the following table:

Intercompany transactions between	§ 1.1502–13
P and L_1	Yes.
P and S, if they file:	
Separate returns	Yes.
A consolidated return	No.
S and L_4	Yes.
L_2 and L_3, if L_1, L_2, and L_3 file:	
Separate returns	Yes.
A consolidated return	No.

(v) *Additional rules.* (A) If a group with a taxable year ending in the month of December, 1982, had made the election under section 1504(c)(2) for a taxable year ending prior to December 1, 1982, and if that group meets the conditions of subdivision (vi) of this paragraph (e)(4), then the common parent may elect to discontinue filing a consolidated return for its taxable year ending in the month of December, 1982 (and other members of the section 1504(c)(2) group must comply with this election) by filing appropriate returns (see paragraph (e)(4)(i) of this section) before September 16, 1983.

(B) If a group made the election under section 1504(c)(2) for its taxable year ending in the month of December, 1982, and if that group meets the conditions of subdivision (vi) of this paragraph (e)(4), then the common parent may elect to withdraw the section 1504(c)(2) election (and all other members of the group determined without section 1504(b)(2) comply with the election) by filing before September 16, 1983, any returns for the appropriate taxable years that would have been filed had the section 1504(c)(2) election never been made.

(vi) A group referred to at subdivision (v)(A) or (B) of this (e)(4) meets the conditions of this subdivision (vi) if it—

(A) filed before March 16, 1983, a return for its taxable year ending in the month of December, 1982, and

(B) had not been granted an extension of time beyond March 15, 1983, for the filing of that return.

(vii) *Interest.* For purposes of section 6601(a), interest runs from the original due date (without extensions) for the filing of such returns as are filed pursuant to an election (to discontinue or withdraw as the case may be) under this paragraph (e)(4).

(5) *Consent to regulations.* If a group does not discontinue filing a consolidated return under paragraph (e)(4) of this section but continues to file a consolidated return for the group's first taxable year for which the regulations under this section are first effective, the members of the group will be deemed to have consented to the regulations under this section.

(6) *Cross reference.* If an election is made under section 1504(c)(2), see § 1.1502–75 (e) and (f) for rules that apply for not including (or including) a member or a nonmember in the consolidated return.

(f) *Effect of election.* If the common parent makes the election under section 1504(c)(2), the following rules apply:

(1) *Termination of group.* A mere election under section 1504(c)(2) will not cause the creation of a new group or the termination of an affiliated group that files a consolidated return in the immediately preceding taxable year.

(2) *Effect of eligibility.* If a life member is eligible after an election under section 1504(c)(2), it may not be included as a member of an affiliated group as defined in section 1504(c)(1).

(3) *Eligible and ineligible life companies.* If any life company was a member of an affiliated group of life companies (as defined in section 1504(c)(1)) but is ineligible for a taxable year for which the election under section 1504(c)(2) is effective, that year is not a separate return year merely by reason of the election under section 1504(c)(2) in applying §§ 1.1502–13, 1.1502–18, and 1.1502–19 to transactions occurring in prior consolidated return years of that affiliated group. In addition, if more than one ineligible life member of the group (as defined in section 1504(c)(1)) joined in the filing of a consolidated return in the taxable year immediately preceding the year for which the election under section 1504(c)(2) is effective and, solely as a result of the election, one of the ineligible life members becomes the common parent of such a group (section 1504(c)(1)), the group must continue to file a consolidated return. For example, assume that L_1 owns all of the stock of S_1 and all of the stock of

L_2. L_2 owns the stock of L_3. L_1, L_2, and L_3 are life companies and S_1 is a nonlife company. Assume further that in 1981, L_1, L_2, and L_3 file a consolidated return but L_1 makes the election under section 1504(c)(2) for 1982 and L_2 and L_3 are ineligible. L_2 and L_3 must continue to file a consolidated return in 1982. Moreover, L_2 could elect in 1982 to file a consolidated return (section 1504(c)(1)) with L_3 even if they did not file a consolidated return in 1981 with L_1.

(4) *Inclusion of life company*. If a life company is ineligible in the consolidated return year for which the election is effective, it will be treated as an includible corporation for the common parent's first taxable year in which the company becomes eligible.

(5) *Dividends received deduction*. Section 243(b)(5) defines the term affiliated group for purposes of the election to deduct 100 percent of the qualifying dividends received by a member from another member of the group. Section 246(b)(6) limits certain multiple tax benefits and the deduction itself. Section 243(b) (5) and (6) do not apply to the mutual companies and life companies that are eligible corporations. See section 1504(c)(2)(B)(i). Thus, the common parent of the group may elect to deduct 100 percent of the qualifying dividends received from an ineligible life company.

(6) *Controlled group*. Sections 1563 (a)(4), (b)(2)(D), and (b)(3)(C) (insofar as it applies to corporations described in section 1563(b)(2)(D)) do not apply to any eligible or ineligible life company that is a member of the group for a taxable year during which the election is effective. See paragraph (d)(4) of this section for the definition of group.

(7) *Consolidated tax*. The tax liability of a group for a consolidated return year (before application of credits against that tax) is computed on a consolidated basis by adding together the following taxes:

(i) The tax imposed under section 11 on consolidated taxable income (as determined under paragraph (g) of this section). The taxes imposed under sections 802(a), 821(a), and 831(a) will each be treated as a tax imposed under section 11.

(ii) The tax imposed by section 1201 on consolidated net capital gain (as determined under paragraph (o) of this section) in lieu of the tax imposed under paragraph (f)(7)(i) of this section on that gain.

(iii) Any taxes described in §1.1502–2 (other than by paragraphs (a), (f), and (h) thereof).

(g) *Consolidated taxable income*. The consolidated taxable income is the sum of the following three amounts:

(1) *Nonlife consolidated taxable income*. The nonlife consolidated taxable income (as defined in paragraph (h) of this section) of the nonlife subgroup, as set off by the life subgroup losses as provided in paragraph (n) of this section. The amount in this paragraph (g)(1) may not be less than zero.

(2) *Consolidated partial LICTI*. The consolidated partial LICTI (as defined in paragraph (j) of this section) of the life subgroup, as set off by the nonlife subgroup losses as provided in paragraph (m) of this section. The amount in this paragraph (g)(2) may not be less than zero.

(3) *Surplus accounts*. The sum of the amounts subtracted under section 815 from the policyholders' surplus accounts of the life members.

(h) *Nonlife consolidated taxable income*—(1) *In general*. Nonlife consolidated taxable income is the consolidated taxable income of the nonlife subgroup, computed under §1.1502–11 as modified by this paragraph (h). For this purpose, separate taxable income of a member includes separate mutual insurance company taxable income (as defined in section 821(b)) and insurance company taxable income (as defined in section 832).

(2) *Nonlife consolidated net operating loss deduction*—(i) *In general*. In applying §§1.1502–21 or 1.1502-21A (as appropriate), the rules in this subparagraph (2) apply in determining for the nonlife subgroup the nonlife net operating loss and the portion of the nonlife net operating loss carryovers and carrybacks to the taxable year.

(ii) *Nonlife CNOL*. The nonlife consolidated net operating loss is determined under §§1.1502–21(A)(f) or 1.1502-21(e) (as appropriate) by treating the nonlife subgroup as the group.

(iii) *Carryback*. The nonlife consolidated net operating loss for the nonlife subgroup is carried back under §§ 1.1502–21A or 1.1502-21 (as appropriate) to the appropriate years (whether consolidated or separate) before the loss may be used as a nonlife subgroup loss under paragraphs (g)(2) and (m) of this section to set off consolidated partial LICTI in the year the loss arose. The election under section 172(b)(3)(C) to relinquish the entire carryback period for the net operating loss of the nonlife subgroup may be made by the common parent of the group. Furthermore, the election may be made even though the election under section 812(b)(3) and paragraph (l)(3)(iii) of this section is not made.

(iv) *Subgroup rule*. In determining the portion of the nonlife consolidated net operating loss that is absorbed when the loss is carried back to a consolidated return year beginning after December 31, 1981, §§ 1.1502–21A or 1.1502-21 (as appropriate) is applied by treating the nonlife subgroup as the group. Therefore, the absorption is determined without taking into account any life subgroup losses that were previously reported on a consolidated return as setting off nonlife consolidated taxable income for the year to which the nonlife loss is carried back.

(v) *Carryover*. The portion of the nonlife consolidated net operating loss that is not absorbed in a prior year as a carryback, or as a nonlife subgroup loss that set off consolidated partial LICTI for the year the loss arose, constitutes a nonlife carryover under this subparagraph (2) to reduce nonlife consolidated taxable income before that portion may constitute a nonlife subgroup loss that sets off consolidated partial LICTI for a particular year.

(vi) *Transitional rules*. The nonlife consolidated net operating loss deduction is subject to a transitional rule limitation in paragraph (h)(3) of this section.

(vii) *Example*. The following example illustrates this paragraph (h)(2). In the example, L indicates a life company, another letter indicates a nonlife company, and each corporation uses the calendar year as its taxable year.

Example. P owns all of the stock of S and L_1. L_1 owns all of the stock of L_2. For 1982, the group first files a consolidated return for which the election under section 1504(c)(2) is effective. P and S filed consolidated returns for 1979 through 1981. In 1982, the P-S group sustains a nonlife consolidated net operating loss. The loss is carried back to the consolidated return years 1979, 1980, and 1981 of P and S by using the principles of §§ 1.1502–21A and 1.1502–79A and, because the election in 1982 under section 1504(c)(2) does not result under paragraph (f)(1) of this section in the creation of a new group or the termination of the P-S nonlife group, the loss is absorbed on the consolidated return in those years without regard to whether the loss in 1982 is attributable to P or S and without regard to their contribution to consolidated taxable income in 1979, 1980, or 1981. The portion of the loss not absorbed in 1979, 1980, and 1981 may serve as a nonlife subgroup loss in 1982 that may set off the consolidated partial LICTI of L_1 and L_2 under paragraphs (g)(2) and (m) of this section.

(3) *Transitional rule*—(i) *In general*. The portion of the nonlife consolidated net operating loss deduction in a consolidated return year beginning after December 31, 1980 (referred to as ''post-1980 year'') attributable to net operating losses sustained in separate return years ending before January 1, 1981 (referred to as ''pre-1981 year''), is subject to the rules and limitations in this subparagraph (3).

(ii) *Separate nonlife groups*. To determine the limitation, first, identify for the post-1980 year one or more separate affiliated groups of nonlife companies (as defined in section 1504 without section 1504(c)(2)). For this purpose, a single nonlife company may constitute a separate affiliated group if (A) it is not otherwise a member of a separate group or (B) it has a net operating loss sustained in the pre-1981 year that may be carried over and that year is a separate return limitation year (determined under § 1.1502–1(f) without paragraph (d)(11) of this section).

(iii) *Carryover*. Second, identify the pre-1981 year net operating losses that may be carried over and that are attributable to each separate affiliated group of nonlife companies. The separate return limitation year rules in §§ 1.1502–21A(c) or 1.1502-21(c) (as appropriate) do not apply to any of these carryovers.

(iv) *Limitation*. Third, treat the last taxable year ending before January 1,

1981, as if in that year there was a consolidated return change of ownership of each such separate affiliated group of nonlife companies and apply the consolidated return change of ownership limitation in §1.1502–21A(d) to the losses of each group by treating the members of each separate group as old members.

(v) *Examples*. The following examples illustrate this paragraph (h)(3). In the examples L indicates a life company, another letter indicates a nonlife company, and each corporation uses the calendar year as its taxable year.

Example 1. Throughout all of 1982, P owns all of the stock of S and L_1 and L_1 owns all of the stock of L_2 which in turn owns all of the stock of S_1. Thus, for 1982, there are two nonlife subgroups under this subparagraph (3), P-S and S_1. For 1981, P and S did not file a consolidated return and for 1980 P has a net operating loss of $200,000. Assume that P had no income in 1981. For 1982, the group makes an election under section 1504(c)(2) to file a consolidated return and all corporations are eligible corporations. The consolidated taxable income for the nonlife subgroup for 1982 (determined without the consolidated net operating loss deduction) recomputed by including only items of income and deduction of P and S is $120,000. If $120,000 is the §1.1502–21(d)(2) amount for P and S, then the amount of P's net operating loss for 1980 that may be carried over to P and S for 1982 cannot exceed $120,000.

Example 2. (a) P owns all of the stock of S_1. On January 1, 1979, P purchased all of the stock of L_1 which owns all of the stock of L_2 and S_2. Prior to 1984, all of the corporations filed separate returns. For 1984, the group makes an election under section 1504(c)(2) to file a consolidated return.

(b) 1981, 1982, and 1983 are not treated under paragraph (d)(11) of this section as separate return limitation years of the P, S_1, and S_2 nonlife subgroup. However, P and S_1 will be treated as old members under paragraph (h)(3)(iv) of this section and under §1.1502–21A(d) with respect to their losses in 1979 and 1980 (whether a consolidated return was filed or separate returns were filed) so that the portion of nonlife consolidated taxable income attributable to S_2 may not absorb the losses of P or S_1. The rules that apply to the P-S_1 nonlife subgroup for 1979 and 1980 apply in an identical way to S_2 by treating S_2 as a subgroup separate from the P-S_1 nonlife subgroup. See section 1507(c)(2)(A) of the Tax Reform Act of 1976.

(c) Similarly, L_1 and L_2 are treated as old members under paragraphs (l)(3) and (h)(3)(iv) of this section for losses arising in 1979 and 1980. However, since the L_1—L_2 subgroup is also the life subgroup under paragraph (d)(8) of this section, the limitation in paragraph (h)(3)(iv) of this section does not affect the computation of consolidated partial LICTI for the life subgroup.

(4) *Nonlife consolidated capital gain net income or loss*—(i) *In general*. In applying §§1.1502–22 or 1.1502-22A (as appropriate),the rules in this subparagraph (4) apply in determining for the nonlife subgroup the nonlife consolidated capital gain net income or loss and the portion of the nonlife net capital loss carryovers and carrybacks to the taxable year. In particular, the nonlife consolidated capital gain net income and nonlife consolidated net capital loss are determined under the principles of §§1.1502–22 or 1.1502-22A(a) (as appropriate) by treating the nonlife subgroup as the group.

(ii) *Additional principles*. In applying §§1.1502–22A or 1.1502-22 to nonlife consolidated net capital loss carryovers and carrybacks, the principles set forth in paragraphs (h)(2) (iii) through (v) for applying §§1.1502–21 or 1.1502-21A (as appropriate) to nonlife consolidated net operating loss carryovers and carrybacks shall also apply. Further, the portion of nonlife consolidated net capital loss carryovers attributable to losses sustained in taxable years ending before January 1, 1981, is subject to the limitations in paragraph (h)(3) of this section applied by substituting ''net capital loss'' for the term ''net operating loss'' and ''§1.1502–22A(d)'' for ''§1.1502–21A(d)''.

(iii) *Special rules*. The nonlife consolidated net capital loss is reduced, for purposes of determining the carryovers and carrybacks under §§1.1502–22A(b)(1) or 1.1502-22(b) by the lesser of:

(A) The aggregate of the additional capital loss deductions allowed under section 822(c)(6) or section 832(c)(5), or

(B) The nonlife consolidated taxable income computed without capital gains and losses.

(i) [Reserved]

(j) *Consolidated partial LICTI*. [Reserved]

(k) *Consolidated TII*—(1) *General rule*. [Reserved]

(2) *Separate TII*. [Reserved]

(3) *Company's share of investment yield*. [Reserved]

(4) *Life consolidated capital gain net income*. [Reserved]

(5) *Life consolidated net capital loss carryovers and carrybacks*. The life consolidated net capital loss carryovers and carrybacks for the life subgroup are determined by applying the principles of §§ 1.1502–22 or 1.1502–22A (as appropriate) as modified by the following rules in this subparagraph (5):

(i) Life consolidated net capital loss is first carried back (or apportioned to the life members for separate return years) to be absorbed by life consolidated capital gain net income without regard to any nonlife subgroup capital losses and before the life consolidated net capital loss may serve as a life subgroup capital loss that sets off nonlife consolidated capital gain net income in the year the life consolidated net capital loss arose.

(ii) If a life consolidated net capital loss is not carried back or is not a life subgroup loss that sets off nonlife consolidated capital gain net income in the year the life consolidated net capital loss arose, then it is carried over to the particular year under this paragraph (k)(5) first against life consolidated capital gain net income before it may serve as a life subgroup capital loss that sets off nonlife consolidated capital gain net income in that particular year.

(iii) *Section 818(f)*. Capital losses may not be deducted more than once and capital gain will not be included more than once. See section 818(e) and also section 818(f).

(iv) Capital loss carryovers are subject to the transitional rule in paragraph (k)(6) of this section.

(6) *Transitional rule*. The portion of the life consolidated capital loss carryovers attributable to the net capital losses of the life members sustained in separate return years ending before January 1, 1981, is subject to the same limitations as the capital losses of nonlife members in paragraph (h)(4)(iii) of this section by applying the principles of paragraph (h)(3) of this section to each separate affiliated group of life companies.

(l) *Consolidated GO or LO*—(1) *General rule*. [Reserved]

(2) *Separate GO*. [Reserved]

(3) *Consolidated operations loss deduction*—(i) *General rule*. The consolidated operations loss deduction is an amount equal to the consolidated operations loss carryovers and carrybacks to the taxable year. The provisions of §§ 1.1502–21 or 1.1502–21A (as appropriate) and section 812 apply to the extent not inconsistent with this paragraph (l)(3).

(ii) *Consolidated offset*. For purposes of applying section 812 (b) and (d), the term ''consolidated offset'' means the increase in the consolidated operations loss deduction which reduces consolidated partial LICTI to zero. For setoff of consolidated LO against nonlife consolidated taxable income, see paragraph (n)(2) of this section.

(iii) *Carrybacks*. A consolidated LO is first carried back to be absorbed by GO of a life member under section 809(d)(4) or consolidated partial LICTI (as the case may be under section 818(f)(2)) for prior consolidated return years (or apportioned to the life members for prior separate return years) without regard to any nonlife subgroup losses that were set off against consolidated partial LICTI and before the consolidated LO may serve as a life subgroup loss to be set off against nonlife consolidated taxable income in the year the consolidated LO arose. The election to relinquish the entire carryback period for the consolidated LO of the life subgroup may be made by the common parent of the group. See section 812(b)(3). Furthermore, the election may be made even though the election under section 172(b)(3)(C) and paragraph (h)(2)(iii) of this section is not made.

(iv) *Carryovers*. If a consolidated LO is not carried back or is not applied as a life subgroup loss that set off nonlife consolidated taxable income in the year the consolidated LO arose, then it is carried over to a particular year under this paragraph (l)(3) first against the GO of a life member under section 809(d)(4) or consolidated partial LICTI (as the case may be under section 818(f)(2)) before it may serve as a life subgroup loss that may be set off against nonlife consolidated taxable income for that particular year.

(v) *Transitional rule*. The portion of a consolidated operations loss deduction

that is attributable to LOs sustained in separate return years ending before January 1, 1981, is subject to the same rules and limitations that the nonlife consolidated net operating loss deduction is subject to in paragraph (h)(3) of this section as applied by identifying separate affiliated groups of life companies.

(4) *Life consolidated capital gain net income or loss.* Life consolidated capital gain net income or loss is determined in the same manner as under paragraph (k)(4) of this section. However, a life member's company share is determined under section 809 (a) and (b)(3).

(m) *Consolidated partial LICTI setoff by nonlife subgroup losses*—(1) *In general.* The nonlife subgroup losses consist of the nonlife consolidated net operating loss and the nonlife consolidated net capital loss. Under paragraph (g)(2) of this section, consolidated partial LICTI is set off by the amounts of these two consolidated losses specified in paragraph (m)(2) of this section. The setoff is subject to the rules and limitations in paragraph (m)(3) of this section.

(2) *Amount of setoff*—(i) *Current year.* Consolidated partial LICTI for the current taxable year is set off by the portion of the nonlife consolidated net operating loss and nonlife consolidated net capital loss arising in that year that cannot be carried back under paragraph (h) of this section to prior taxable years (whether consolidated or separate return years) of the nonlife subgroup.

(ii) *Carryovers.* The portion of the offsettable nonlife consolidated net operating loss or nonlife consolidated net capital loss that has not been used as a nonlife subgroup loss setoff against consolidated partial LICTI in the year it arose may be carried over to succeeding taxable years under the principles of §§ 1.1502–21 or 1.1502–21A (as appropriate) (relating to net operating loss deduction) or §§ 1.1502–22 or 1.1502–22A (as appropriate) (relating to net capital loss carryovers). However, in any particular succeeding year, the losses will be used under paragraph (h) of this section in computing nonlife consolidated taxable income before being used in that year as a nonlife subgroup loss that sets off consolidated partial LICTI.

(3) *Nonlife subgroup loss rules and limitations.* The nonlife subgroup losses are subject to the following operating rules and limitations:

(i) *Separate return years.* The carryovers in paragraph (m)(2)(ii) of this section may include net operating losses and net capital losses of the nonlife members arising in separate return years ending after December 31, 1980, that may be carried over to a succeeding year under the principles (including limitations) of §§ 1.1502–21 and 1.1502–22 (or §§ 1.1502–21A and 1.1502–22A, as appropriate). But see subdivision (ix) of this paragraph (m)(3).

(ii) *Capital loss.* Nonlife consolidated net capital loss sets off consolidated partial LICTI only to the extent of life consolidated capital gain net income (as determined under paragraph (l)(4) of this section) and this setoff applies before any nonlife consolidated net operating loss sets off consolidated partial LICTI.

(iii) *Capital gain.* Life consolidated capital gain net income is zero in any taxable year in which the life subgroup has a consolidated LO and, in any taxable year, it may not exceed consolidated partial LICTI.

(iv) *Ordering rule.* Consolidated partial LICTI for a consolidated return year is set off by nonlife subgroup losses for that year before being set off (under paragraph (m)(2)(ii) of this section) by a carryover of a nonlife subgroup loss to that year.

(v) *Setoff at bottom line.* The setoff of nonlife subgroup losses against consolidated partial LICTI does not affect life member deductions that depend in whole or in part on GO or TII. Thus, the setoff does not affect the amount of consolidated partial LICTI (as determined under paragraph (j) of this section) for any taxable year but it merely constitutes an adjustment in arriving at the group's consolidated taxable income under paragraph (g) of this section.

(vi) *Ineligible nonlife member.* (A) The offsetable nonlife consolidated net operating loss that arises in any consolidated return year (that may be set off against consolidated partial LICTI in the current taxable year or in a succeeding taxable year) is the amount computed under paragraph (h)(2)(ii) of

this section reduced by the ineligible NOL. For purposes of this subparagraph (3), the ''ineligible NOL'' is in the year the loss arose the amount of the separate net operating loss (determined under §§1.1502–21(b) of any nonlife member that is ineligible in that year (and not the portion of the nonlife consolidated net operating loss attributable under §§1.1502–21(b) to such a member). (B) The carryovers of offsetable nonlife net operating losses under paragraph (m)(2)(ii) of this section do not include an ineligible NOL arising in a consolidated return year or a loss attributable to an ineligible member arising in a separate return year. See section 1503(c)(2). (C) For absorption within the nonlife subgroup of an ineligible NOL arising in a consolidated return year or a loss of an ineligible member arising in a separate return year which is not a separate return limitation year under paragraph (m)(3)(ix) of this section, see paragraph (m)(3)(vii) of this section.

(vii) *Absorption of ineligible NOL.* (A) If all or a portion of a nonlife member's ineligible NOL (determined under paragraph (m)(3)(vi)(A) of this section) may be carried back or carried over under paragraph (h)(2) of this section to a particular consolidated return year of the nonlife subgroup (absorption year), then notwithstanding §1.1502–21A(b)(3)(ii) or 1.1502–21(b), the amount carried to the absorption year will be absorbed by that member's contribution (to the extent thereof) to nonlife consolidated taxable income for that year.

(B) For purposes of (A) of this subdivision (vii), a member's contribution to nonlife consolidated taxable income for an absorption year is the amount of such income (computed without the portion of the nonlife consolidated net operating loss deduction attributable to taxable years subsequent to the year the loss arose), minus such consolidated taxable income recomputed by excluding both that member's items of income and deductions for the absorption year. The deductions of the member include the prior application of this paragraph (m)(3)(vii) to the absorption of the nonlife consolidated net operating loss deduction for losses arising in taxable years prior to the particular loss year.

(viii) *Election to relinquish carryback.* The offsetable nonlife consolidated net operating loss does not include the amount that could be carried back under paragraph (h) (2) of this section but for the common parent's election under section 172(b)(3)(C) to relinquish the carryback. See section 1503(c)(1).

(ix) *Separate return limitation year.* The offsetable nonlife consolidated net operating and capital loss carryovers do not include any losses attributable to a nonlife member that were sustained (A) in a separate return limitation year (determined without section 1504(b)(2)) of that member (or a predecessor), or (B) in a separate return year ending after December 31, 1980, in which an election was in effect under neither section 1504(c)(2) nor section 243(b)(2). For purposes of this paragraph (m), a separate return limitation year includes a taxable year ending before January 1, 1981. See section 1507(c)(2)(A) of the Tax Reform Act of 1976 and §§1.1502–15 and 1.1502–15A (including applicable exceptions thereto).

(x) *Percentage limitation.* The offsetable nonlife consolidated net operating losses that may be set off against consolidated partial LICTI in a particular year may not exceed a percentage limitation. This limitation is the applicable percentage in section 1503(c)(1) of the lesser of two amounts. The first amount is the sum of the offsetable nonlife consolidated net operating losses under paragraph (m)(2) of this section that may serve in the particular year (determined without this limitation) as a setoff against consolidated partial LICTI. The second amount is consolidated partial LICTI (as defined in paragraph (j) of this section) in the particular year reduced by any nonlife consolidated net capital loss that sets off consolidated partial LICTI in that year.

(xi) *Further limitation.* Any offsetable nonlife consolidated net operating loss remaining after applying the percentage limitation that is carried over to a succeeding taxable year may not be set off against the consolidated partial LICTI attributable to a life member that was not an eligible life member in

the year the loss arose. See section 1503(c)(2).

(xii) *Restoration rule.* The carryback of a consolidated LO or life consolidated net capital loss under paragraph (l) of this section that reduces consolidated partial LICTI (or life consolidated capital gain net income) for a prior year may reduce the amount of nonlife subgroup losses that would offset consolidated partial LICTI in that prior year. Thus, that amount may be carried over under paragraph (h) (2) or (4) of this section from that prior year in determining nonlife consolidated taxable income in a succeeding year or serve as offsetable nonlife subgroup losses in a succeeding year.

(4) *Acquired groups.* [Reserved]

(5) *Illustrations.* The following examples illustrates this paragraph (m). In the examples, L indicates a life company, another letter indicates a nonlife company, and each corporation uses the calendar year as its taxable year.

Example 1. P owns all of the stock of L and S. S owns all of the stock of I, a nonlife member that is an ineligible corporation for 1982 under paragraph (d)(13) of this section. For 1982, the group elects under section 1504(c)(2) to file a consolidated return. For 1982, assume that any nonlife consolidated net operating loss may not be carried back to a prior taxable year. Other facts are summarized in the following table.

	Separate taxable income (loss)
P	$100
S	(100)
I	(100)
Nonlife consolidated net operating loss	(100)

Under paragraph (m)(3)(vi) of this section, P's separate income is considered to absorb the loss of S, an eligible member, first and the offsetable nonlife consolidated net operating loss is zero, *i.e.,* the consolidated net operating loss ($100) reduced by I's loss ($100). The consolidated net operating loss ($100) may be carried over, but since it is entirely attributable to I (an ineligible member) its use is subject to the restrictions in paragraph (m)(3)(vi) of this section. The result would be the same if the group contained two additional members, S_1, an eligible member, and I_1, an ineligible member, where S_1 had a loss of ($100) and I_1 had income of $100.

Example 2. The facts are the same as in example (1) except that for 1982 S's separate net operating loss is $200. Assume further that L's consolidated partial LICTI is $200. Under paragraph (m)(3)(vi) of this section, the offsetable nonlife consolidated net operating loss is $100, *i.e.,* the nonlife consolidated net operating loss computed under paragraph (h)(2)(ii) of this section ($200), reduced by the separate net operating loss of I ($100). The offsetable nonlife consolidated net operating loss that may be set off against consolidated partial LICTI in 1982 is $30, *i.e.,* 30 percent of the lesser of the offsetable $100 or consolidated partial LICTI of $200. See paragraph (m)(3)(x) of this section. The nonlife subgroup may carry $170 to 1983 under paragraph (h)(2) of this section against nonlife consolidated taxable income, *i.e.,* consolidated net operating loss ($200) less amount used in 1982 ($30). Under paragraph (m)(2)(ii) of this section, the offsetable nonlife consolidated net operating loss that may be carried to 1983 is $70, *i.e.,* $100 minus $30. The facts and results are summarized in the table below.

	(Dollars omitted)			
	Facts	Offsetable	Limit	Unused loss
	(a)	(b)	(c)	(d)
1. P	100	.....	.....	.....
2. S.	(200)	(100)	.....	(70)
3. I	(100)	.....	.....	(100)
4. Nonlife subgroup	(200)	(100)	(100)	(170)
5. L	200	.....	200	.....
6. 30% of lower of line 4(c) or 5(c)	.....	.....	30	.....
7. Unused offsetable loss	.....	.....	.....	(70)

Accordingly, under paragrah (g) of this section (assuming no amount is withdrawn from L's surplus accounts), consolidated taxable income is $170, *i.e.,* line 5 (a) minus line 6(c)).

Example 3. The facts are the same as in example (2) with the following additions for 1983. The nonlife subgroup has nonlife consolidated taxable income of $50 (all of which is attributable to I) before the nonlife consolidated net operating loss deduction under paragraph (h)(2) of this section. Consolidated partial LICTI is $100. Under paragraph (h)(2) of this section, $50 of the nonlife consolidated net operating loss carryover ($170) is used in 1983 and, under paragraph (m)(3) (vi) and (vii) of this section, the portion used in 1982 is attributable to I, the ineligible nonlife member. Accordingly, the offsetable nonlife consolidated net operating loss from 1982 under paragraph (m)(3)(ii) of this section is $70, *i.e.,* the unused loss from 1982. The offsetable nonlife consolidated net operating loss in 1983 is $24.50, *i.e.,* 35 percent of the lesser of the offsetable loss of $70 or consolidated partial LICTI of $100. Accordingly, under paragraph (g) of this section (assuming

no amount is withdrawn from L's surplus accounts), consolidated taxable income is $75.50, *i.e.*, consolidated partial LICTI of $100 minus the offsetable loss of $24.50.

Example 4. P owns all of the stock of S and L. For 1982, all corporations are eligible corporations, and the group elects under section 1504(c)(2) to file a consolidated return, the nonlife consolidated net operating loss is $100, and the nonlife consolidated net capital loss is $50. Assume that the losses may not be carried back and the capital losses are not attributable to built-in deductions under paragraph (m)(3)(ix) of this section or under § 1.1502–15A. Other facts and the results are set forth in the following table:

	P-S	L
1. Nonlife consolidated net operating loss	($100)	.....
2. Nonlife consolidated capital loss	(50)	.....
3. Consolidated partial LICTI	.....	$100
4. Life consolidated capital gain net income included in line 3	.....	50
5. Offsetable:		
(a) 30% of lower of line (1) or line (3)–(4)	(15)	.....
(b) Line 2	(50)	.....
(c) Total	(65)	.....
6. Unused losses available to be carried over:		
(a) From line 1 (line 1 minus line 5 (a))	(85)	.....
(b) From line 2 (line 2 minus line 5 (b))	0	.....

Accordingly, under paragraph (g) of this section consolidated taxable income is $35, *i.e.*, line 3 minus line 5(c).

Example 5. The facts are the same as in example (4). Assume further that for 1983 L has an LO that is carried back to 1982 and the LO is large enough to reduce consolidated partial LICTI for 1982 to zero as determined before any setoff for nonlife losses. Under paragraph (m)(3)(xii) of this section, the nonlife consolidated net operating loss of $15 and the nonlife consolidated net capital loss of $50 that were set off in 1982 respectively against consolidated partial LICTI and life consolidated capital gain net income are restored. These restored amounts may consititute part of the nonlife consolidated net operating loss carryover to 1983 under paragraph (h)(2) of this section or part of the nonlife net capital loss carryover to 1983 under paragraph (h)(4) of this section.

Example 6. The facts are the same as in example (5) except that L's LO for 1983 as carried back reduces consolidated partial LICTI in 1982 from $100 to $25. Since consolidated partial LICTI of $100 in 1982 (before the carryback) included life consolidated capital gain net income of $50, under paragraph (m)(3)(iii) of this section, the life consolidated capital gain net income is $25, *i.e.*, $50 but not more than $25. Therefore, under paragraph (m)(3)(ii) of this section, the offsetable nonlife capital loss in 1982 is $25 and, under paragraph (m) (3)(xii) of this section, $25 of the $50 nonlife consolidated net capital loss in 1982 may be carried under paragraph (h)(4) of this section to 1983. No nonlife consolidated net operating loss is used as a setoff against consolidated partial LICTI in 1982 under paragraph (m)(3)(xii) of this section by reason of the carryback of the consolidated LO from 1983 to 1982.

(n) *Nonlife consolidated taxable income set off by life subgroup losses*—(1) In *general.* The life subgroup losses consist of the consolidated LO and the life consolidated net capital loss (as determined under paragraph (l)(4) of this section). Under paragraph (g)(1) of this section, nonlife consolidated taxable income is set off by the amounts of these two consolidated losses specified in paragraph (n)(2) of this section.

(2) *Amount of setoff.* The portion of the consolidated LO or life consolidated net capital loss that may be set off against nonlife consolidated taxable income (determined under paragraph (h) of this section) is determined by applying the rules prescribed in paragraphs (m) (2) and (3) of this section in the following manner:

(i) Substitute the term ''life'' for ''nonlife'', and vice versa.

(ii) Substitute the term ''nonlife consolidated taxable income'' for ''consolidated partial LICTI'', and vice versa.

(iii) Substitute the term ''consolidated LO'' for ''non-life consolidated net operating loss'', ''paragraph (l)'' or ''paragraph (j)'' for ''paragraph (h)'', and ''section 812(b)(3)'' for ''section 172(b)(3)(C)''.

(iv) Paragraphs (m)(3)(vi), (vii), (x), and (xi) of this section do not apply to a consolidated LO.

(v) Capital losses may not be deducted more than once. See section 818(e) and also the requirements in section 818(f).

(vi) The setoff of life subgroup losses against nonlife consolidated taxable income does not affect nonlife member deductions that depend in whole or in part on taxable income.

(3) *Illustrations.* The following examples illustrate this paragraph (n). In the examples, L indicates a life company, another letter indicates a nonlife company, and each corporation uses the calendar year as its taxable year.

Example 1. P, S, L_1 and L_2 constitute a group that elects under section 1504(c)(2) to file a consolidated return for 1982. In 1982, the nonlife subgroup consolidated taxable income is $100 and there is $20 of nonlife consolidated net capital loss that cannot be carried back under paragraph (h) of this section to taxable years (whether consolidated or separate) preceding 1982. The nonlife subgroup has no carryover from years prior to 1982. Consolidated LO is $150 which under paragraph (l) of this section includes life consolidated capital gain net income of $25. The $150 LO is carried back under paragraph (l)(3) of this section to taxable years (whether consolidated or separate) preceding 1982 before it may offset in 1982 nonlife consolidated taxable income. Since life consolidated capital gain net income is zero for 1982, the nonlife capital loss offset is zero.

Example 2. The facts are the same as in example (1). Assume further that no part of the $150 consolidated LO for 1982 can be used by L_1 and L_2 in years prior to 1982. For 1982, $100 of consolidated LO sets off the $100 nonlife consolidated taxable income. The life subgroup carries under paragraph (l)(3) of this section to 1983 $50 of the consolidated LO ($150 minus $100). See paragraph (l)(3)(ii) of this section. The $50 carryover will be used in 1983 against life subgroup income before it may be used in 1983 to setoff nonlife consolidated taxable income.

Example 3. (a) The facts are the same as in example (1), except that for 1982 the nonlife consolidated taxable income is $150 and includes nonlife consolidated capital gain net income of $50, consolidated partial LICTI is $200, and a life consolidated net capital loss is $50. Assume that the $50 life consolidated net capital loss sets off the $50 nonlife consolidated capital gain net income. Consolidated taxable income under paragraph (g) of this section is $300, *i.e.*, nonlife consolidated taxable income ($150) minus the setoff of the life consolidated net capital loss ($50), plus consolidated partial LICTI ($200).

(b) Assume that for 1983 the nonlife consolidated net operating loss is $150. Under paragraph (h)(2) of this section, the loss may be carried back to 1982 against nonlife consolidated taxable income. If P, the common parent, does not elect to relinquish the carryback under section 172(b)(3)(C), the entire $150 must be carried back reducing 1982 nonlife consolidated taxable income to zero and nonlife consolidated capital gain net income to zero. Under paragraph (m)(3)(xii) of this section, the setoff in 1982 of the nonlife consolidated capital gain net income ($50) by the life consolidated net capital loss ($50) is restored. Accordingly, the 1982 life consolidated net capital loss may be carried over by the life subgroup to 1983. Under paragraph (g) of this section, after the carryback consolidated taxable income for 1982 is $200, *i.e.*, nonlife consolidated taxable income ($0) plus consolidated partial LICTI ($200).

Example 4. The facts are the same as in example (3), except that P elects under section 172 (b)(3)(C) to relinquish the carryback of $150 arising in 1983. The setoff in part (a) of example (3) is not restored. However, the offsetable nonlife consolidated net operating loss for 1983 (or that may be carried forward from 1983) is zero. See paragraph (m)(3)(viii) of this section. Nevertheless, the $150 nonlife consolidated net operating loss may be carried forward to be used by the nonlife group.

Example 5. P owns all of the stock of S_1 and of L_1. On January 1, 1978, L_1 purchases all of the stock of L_2. For 1982, the group elects under section 1504(c)(2) to file a consolidated return. For 1982, L_1 is an eligible corporation under paragraph (d)(12) of this section but L_2 is ineligible. Thus, L_1 but not L_2 is a member for 1982. For 1982, L_2 sustains an LO that cannot be carried back. For 1982, L_2 is treated under paragraph (f)(6) of this section as a member of a controlled group of corporations under section 1563 with P, S, and L_1. For 1983, L_2 is eligible and is included on the group's consolidated return. L_2's LO for 1982 that may be carried to 1983 is not treated under paragraph (d)(11) of this section as having been sustained in a separate return limitation year for purposes of computing consolidated partial LICTI of the L_1–L_2 life subgroup for 1983. Furthermore, the portion of L_2's LO not used under paragraph (l)(3) of this section against life subgroup income in 1983 may be included in offsetable consolidated operations loss under paragraph (n)(2) and (m)(3)(i) of this section that reduces in 1983 nonlife consolidated taxable income because L_2's loss in 1982 was not sustained in a separate return limitation year under paragraph (n)(2) and (m)(3)(ix)(A) of this section or in a separate return year (1982) when an election was in effect neither under section 1504(c)(2) nor section 243(b)(2).

(o) *Alternative tax*—(1) *In general.* For purposes of the alternative tax under paragraph (f)(7)(ii) of this section, consolidated net capital gain is the sum of the following two amounts:

(i) The nonlife consolidated net capital gain reduced by any setoff of a life consolidated net capital loss.

(ii) The life consolidated net capital gain reduced by any setoff of a nonlife consolidated net capital loss.

(2) *Net capital gain.* For purposes of this paragraph (o):

(i) Nonlife consolidated net capital gain is computed under §§ 1.1502–41A or 1.1502–22T (as appropriate) except that it may not exceed nonlife consolidated taxable income (computed under paragraph (h) of this section).

(ii) Life consolidated net capital gain is computed under §§1.1502–41A or 1.1502–22T (as appropriate), applied in a manner consistent with paragraph (l)(4) of this section, except that it may not exceed consolidated partial LICTI (as determined under paragraph (j) of this section).

(iii) *Setoffs*. Setoffs are determined under paragraphs (m) or (n) of this section (as the case may be).

(p) *Transitional rule for credit carryovers*. For limitations on credits arising in taxable years ending before January 1, 1981, that may be carried over to taxable years beginning on or after that date, section 1507(c)(2)(A) of the Tax Reform Act of 1976 and the principles in paragraph (h)(3) of this section (relating to limitations on loss carryovers) apply.

(q) *Preemption*. The rules in this section preempt any inconsistent rules in other sections (§1.1502–1 through 1.1502–80) of the consolidated return regulations. For example, the rules in paragraph (m)(3)(vi) apply notwithstanding §§1.1502–21A(b)(3) and 1.1502–79A(a)(3) (or §1.1502–21, as appropriate).

(r) *Other consolidation principles*. The fact that this section treats the life and nonlife members as separate groups in computing, respectively, consolidated partial LICTI (or LO) and nonlife consolidated taxable income (or loss) does not affect the usual rules in §§1.1502–0—1.1502–80 unless this section provides otherwise. Thus, the usual rules in §1.1502–13 (relating to intercompany transactions) apply to both the life and nonlife members by treating them as members of one affiliated group.

(s) *Filing requirements*—(1) *In general*. To file a consolidated income tax return for a life-nonlife consolidated group, the common parent shall—

(i) File the applicable consolidated corporate income tax return: a Form 1120–L, ''U.S. Life Insurance Company Income Tax Return,'' where the common parent is a life insurance company; a Form 1120–PC, ''U.S. Property and Casualty Insurance Company Income Tax Return,'' where the common parent is an insurance company, other than a life insurance company; or a Form 1120, ''U.S. Corporation Income Tax Return,'' where the common parent is any other type of corporation;

(ii) Indicate clearly on the face of this return that such corporate tax return is a life-nonlife return;

(iii) Show any set offs required by paragraphs (g), (m), and (n) of this section;

(iv) Report separately the nonlife consolidated taxable income or loss, determined under paragraph (h) of this section, on a Form 1120 or 1120–PC (whether filed by the common parent or as an attachment to the consolidated return), as the case may be, of all nonlife members of the consolidated group; and

(v) Report separately the consolidated partial Life Insurance Company Taxable Income (as defined by paragraph (d)(3) of this section), determined under paragraph (j) of this section, on a Form 1120–L (whether filed by the common parent or as an attachment to the consolidated return), of all life members of the consolidated group.

(2) *Cross reference*. See §1.1502–75(j), regarding the inclusion in a corporate tax return of the required statements and schedules for subsidiaries.

(t) *Effective/applicability date*. Paragraph (s) of this section applies to any consolidated Federal income tax return due (without extensions) on or after December 21, 2009. However, a consolidated group may apply paragraph (s) of this section to any consolidated Federal income tax return filed on or after December 21, 2009. For returns due before December 21, 2009, see §1.1502–47T as contained in 26 CFR part 1 in effect on April 1, 2009.

(Secs. 1502 and 7805 of the Internal Revenue Code of 1954 (68A Stat. 637, 917; 26 U.S.C. 1502, 7805))

[T.D. 7877, 48 FR 11441, Mar. 18, 1983, as amended by T.D. 7912, 48 FR 40215, Sept. 6, 1983; T.D. 8560, 59 FR 41674, Aug. 15, 1994; T.D. 8597, 60 FR 36679, 36680, July 18, 1995; T.D. 8677, 61 FR 33324, June 27, 1996; T.D. 8823, 64 FR 36100, July 2, 1999; T.D. 9258, 71 FR 23856, Apr. 25, 2006; T.D. 9304, 71 FR 76907, Dec. 22, 2006; T.D. 9342, 72 FR 39736, July 20, 2007; T.D. 9476, 74 FR 68532, Dec. 28, 2009]

§1.1502–55 Computation of alternative minimum tax of consolidated groups.

(a)–(h)(3) [Reserved]

(h)(4) *Separate return year minimum tax credit.* (i)–(ii) [Reserved]

(iii)(A) *Limitation on portion of separate return year minimum tax credit arising in separate return limitation years.* The aggregate of a member's minimum tax credits arising in SRLYs that are included in the consolidated minimum tax credits for all consolidated return years of the group may not exceed—

(*1*) The aggregate for all consolidated return years of the member's contributions to the consolidated section 53(c) limitation for each consolidated return year; reduced by

(*2*) The aggregate of the member's minimum tax credits arising and absorbed in all consolidated return years (whether or not absorbed by the member).

(B) *Computational rules—(1) Member's contribution to the consolidated section 53(c) limitation.* Except as provided in the special rule of paragraph (h)(4)(iii)(B)(*2*) of this section, a member's contribution to the consolidated section 53(c) limitation for a consolidated return year equals the member's share of the consolidated net regular tax liability minus its share of consolidated tentative minimum tax. The group computes the member's shares by applying to the respective consolidated amounts the principles of section 1552 and the percentage method under §1.1502–33(d)(3), assuming a 100% allocation of any decreased tax liability. The group makes proper adjustments so that taxes and credits not taken into account in computing the limitation under section 53(c) are not taken into account in computing the member's share of the consolidated net regular tax, etc. (See, for example, the taxes described in section 26(b) that are disregarded in computing regular tax liability.)

(*2*) *Adjustment for year in which alternative minimum tax is paid.* For a consolidated return year for which consolidated tentative minimum tax is greater than consolidated regular tax liability, the group reduces the member's share of the consolidated tentative minimum tax by the member's share of the consolidated alternative minimum tax for the year. The group determines the member's share of consolidated alternative minimum tax for a year using the same method it uses to determine the member's share of the consolidated minimum tax credits for the year.

(*3*) *Years included in computation.* For purposes of computing the limitation under this paragraph (h)(4)(iii), the consolidated return years of the group include only those years, including the year to which a credit is carried, that the member has been continuously included in the group's consolidated return, but exclude any years after the year to which the credit is carried.

(*4*) *Subgroup principles.* The SRLY subgroup principles under §1.1502–21(c)(2) apply for purposes of this paragraph (h)(4)(iii). The predecessor and successor principles under §1.1502–21(f) also apply for purposes of this paragraph (h)(4)(iii).

(*5*) *Overlap with section 383.* The principles under §1.1502–21(g) apply for purposes of this paragraph (h)(4)(iii). For example, an overlap of this paragraph (h)(4)(iii) and the application of section 383 with respect to a credit carryover occurs if a corporation becomes a member of a consolidated group (the SRLY event) within six months of the change date of an ownership change giving rise to a section 383 credit limitation with respect to that carryover (the section 383 event), with the result that the limitation of this paragraph (h)(4)(iii) does not apply. See §§1.1502–21(g)(2)(ii)(A) and 1.383–1; see also §1.1502–21(g)(4) (subgroup rules).

(C) *Effective date—(1) In general.* This paragraph (h)(4)(iii) generally applies to consolidated return years for which the due date of the income tax return (without extensions) is after March 13, 1998. See §1.1502–3(d)(4) for an optional effective date rule (generally making this paragraph (h)(4)(iii) also applicable to a consolidated return year beginning on or after January 1, 1997, if the due date of the income tax return (without extensions) was on or before March 13, 1998).

(*i*) *Contribution years.* In general, a group does not take into account a consolidated taxable year for which the due date of the income tax return (without extensions) is on or before March 13, 1998, in determining a member's (or subgroup's) contributions to

the consolidated section 53(c) limitation under this paragraph (h)(4)(iii). However, if a consolidated group chooses to apply the optional effective date rule, the consolidated group shall not take into account a consolidated taxable year beginning before January 1, 1997 in determining a member's (or subgroup's) contributions to the consolidated section 53(c) limitation under this paragraph (h)(4)(iii).

(*ii*) *Special subgroup rule*. In the event that the principles of § 1.1502–21(g)(1) do not apply to a particular credit carryover in the current group, then solely for purposes of applying this paragraph (h)(4)(iii) to determine the limitation with respect to that carryover and with respect to which the SRLY register (the aggregate of the member's or subgroup's contribution to consolidated section 53(c) limitation reduced by the aggregate of the member's or subgroup's minimum tax credits arising and absorbed in all consolidated return years) began in a taxable year for which the due date of the return is on or before May 25, 2000, the principles of § 1.1502–21(c)(2) shall be applied without regard to the phrase ''or for a carryover that was subject to the overlap rule described in paragraph (g) of this section or § 1.1502–15(g) with respect to another group (the former group).''

(*2*) *Overlap rule*. Paragraph (h)(4)(iii)(B)(*5*) of this section (relating to overlap with section 383) applies to taxable years for which the due date (without extensions) of the consolidated return is after May 25, 2000. For purposes of paragraph (h)(4)(iii)(B)(*5*) of this section, only an ownership change to which section 383, as amended by the Tax Reform Act of 1986 (100 Stat. 2095), applies and which results in a section 383 credit limitation shall constitute a section 383 event. The optional effective date rule of § 1.1502–3(d)(4) (generally making this paragraph (h)(4)(iii) also applicable to a consolidated return year beginning on or after January 1, 1997, if the due date of the income tax return (without extensions) was on or before March 13, 1998) does not apply with respect to paragraph (h)(4)(iii)(B)(*5*) of this section (relating to the overlap rule).

[T.D. 8884, 65 FR 33759, May 25, 2000]

ADMINISTRATIVE PROVISIONS AND OTHER RULES

§ 1.1502–75 Filing of consolidated returns.

(a) *Privilege of filing consolidated returns*—(1) *Exercise of privilege for first consolidated return year*. A group which did not file a consolidated return for the immediately preceding taxable year may file a consolidated return in lieu of separate returns for the taxable year, provided that each corporation which has been a member during any part of the taxable year for which the consolidated return is to be filed consents (in the manner provided in paragraph (b) of this section) to the regulations under section 1502. If a group wishes to exercise its privilege of filing a consolidated return, such consolidated return must be filed not later than the last day prescribed by law (including extensions of time) for the filing of the common parent's return. Such consolidated return may not be withdrawn after such last day (but the group may change the basis of its return at any time prior to such last day).

(2) *Continued filing requirement*. A group which filed (or was required to file) a consolidated return for the immediately preceding taxable year is required to file a consolidated return for the taxable year unless it has an election to discontinue filing consolidated returns under paragraph (c) of this section.

(b) *How consent for first consolidated year exercised*—(1) *General rule*. The consent of a corporation referred to in paragraph (a)(1) of this section shall be made by such corporation joining in the making of the consolidated return for such year. A corporation shall be deemed to have joined in the making of such return for such year if it files a Form 1122 in the manner specified in paragraph (h)(2) of this section.

(2) *Consent under facts and circumstances*. If a member of the group fails to file Form 1122, the Commissioner may under the facts and circumstances determine that such member has joined in the making of a consolidated return by such group. The

following circumstances, among others, will be taken into account in making this determination:

(i) Whether or not the income and deductions of the member were included in the consolidated return;

(ii) Whether or not a separate return was filed by the member for that taxable year; and

(iii) Whether or not the member was included in the affiliations schedule, Form 851.

If the Commissioner determines that the member has joined in the making of the consolidated return, such member shall be treated as if it had filed a Form 1122 for such year for purposes of paragraph (h)(2) of this section.

(3) *Failure to consent due to mistake.* If any member has failed to join in the making of a consolidated return under either subparagraph (1) or (2) of this paragraph, then the tax liability of each member of the group shall be determined on the basis of separate returns unless the common parent corporation establishes to the satisfaction of the Commissioner that the failure of such member to join in the making of the consolidated return was due to a mistake of law or fact, or to inadvertence. In such case, such member shall be treated as if it had filed a Form 1122 for such year for purposes of paragraph (h)(2) of this section, and thus joined in the making of the consolidated return for such year.

(c) *Election to discontinue filing consolidated returns*—(1) *Good cause*—(i) *In general.* Notwithstanding that a consolidated return is required for a taxable year, the Commissioner, upon application by the common parent, may for good cause shown grant permission to a group to discontinue filing consolidated returns. Any such application shall be made to the Commissioner of Internal Revenue, Washington, DC 20224, and shall be made not later than the 90th day before the due date for the filing of the consolidated return (including extensions of time). In addition, if an amendment of the Code, or other law affecting the computation of tax liability, is enacted and the enactment is effective for a taxable year ending before or within 90 days after the date of enactment, then application for such a taxable year may be made not later than the 180th day after the date of enactment, and if the application is approved the permission to discontinue filing consolidated returns will apply to such taxable year notwithstanding that a consolidated return has already been filed for such year.

(ii) *Substantial adverse change in law affecting tax liability.* Ordinarily, the Commissioner will grant a group permission to discontinue filing consolidated returns if the net result of all amendments to the Code or regulations with effective dates commencing within the taxable year has a substantial adverse effect on the consolidated tax liability of the group for such year relative to what the aggregate tax liability would be if the members of the group filed separate returns for such year. Thus, for example, assume P and S filed a consolidated return for the calendar year 1966 and that the provisions of the Code have been amended by a bill which was enacted by Congress in 1966, but which is first effective for taxable years beginning on or after January 1, 1967. Assume further that P makes a timely application to discontinue filing consolidated returns. In order to determine whether the amendments have a substantial adverse effect on the consolidated tax liability for 1967, relative to what the aggregate tax liability would be if the members of the group filed separate returns for 1967, the difference between the tax liability of the group computed on a consolidated basis and taking into account the changes in the law effective for 1967 and the aggregate tax liability of the members of the group computed as if each such member filed separate returns for such year (also taking into account such changes) shall be compared with the difference between the tax liability of such group for 1967 computed on a consolidated basis without regard to the changes in the law effective in such year and the aggregate tax liability of the members of the group computed as if separate returns had been filed by such members for such year without regard to the changes in the law effective in such year.

(iii) *Other factors.* In addition, the Commissioner will take into account

other factors in determining whether good cause exists for granting permission to discontinue filing consolidated returns beginning with the taxable year, including:

(*a*) Changes in law or circumstances, including changes which do not affect Federal income tax liability,

(*b*) Changes in law which are first effective in the taxable year and which result in a substantial reduction in the consolidated net operating loss (or consolidated unused investment credit) for such year relative to what the aggregate net operating losses (or investment credits) would be if the members of the group filed separate returns for such year, and

(*c*) Changes in the Code or regulations which are effective prior to the taxable year but which first have a substantial adverse effect on the filing of a consolidated return relative to the filing of separate returns by members of the group in such year.

(2) *Discretion of Commissioner to grant blanket permission*—(i) *Permission to all groups*. The Commissioner, in his discretion, may grant all groups permission to discontinue filing consolidated returns if any provision of the Code or regulations has been amended and such amendment is of the type which could have a substantial adverse effect on the filing of consolidated returns by substantially all groups, relative to the filing of separate returns. Ordinarily, the permission to discontinue shall apply with respect to the taxable year of each group which includes the effective date of such an amendment.

(ii) *Permission to a class of groups*. The Commissioner, in his discretion, may grant a particular class of groups permission to discontinue filing consolidated returns if any provision of the Code or regulations has been amended and such amendment is of the type which could have a substantial adverse effect on the filing of consolidated returns by substantially all such groups relative to the filing of separate returns. Ordinarily, the permission to discontinue shall apply with respect to the taxable year of each group within the class which includes the effective date of such an amendment.

(3) *Time and manner for exercising election*. If, under subparagraph (1) or (2) of this paragraph, a group has an election to discontinue filing consolidated returns for any taxable year and such group wishes to exercise such election, then the common parent must file a separate return for such year on or before the last day prescribed by law (including extensions of time) for the filing of the consolidated return for such year. See section 6081 (relating to extensions of time for filing returns).

(d) *When a group remains in existence*—(1) *General rule*. A group remains in existence for a tax year if the common parent remains as the common parent and at least one subsidiary that was affiliated with it at the end of the prior year remains affiliated with it at the beginning of the year, whether or not one or more corporations have ceased to be subsidiaries at any time after the group was formed. Thus, for example, assume that corporation P acquires the sole outstanding share of stock of S on January 1, year 1, and that P and S file a consolidated return for the year 1 calendar year. On May 1, year 2, P acquires the sole outstanding share of stock of S1 and, on July 1, year 2, P sells the S share. The group (consisting originally of P and S) remains in existence in year 2 because P remained the common parent and, S, a subsidiary that was affiliated with P at the end of year 1, remained affiliated with P at the beginning of year 2.

(2) *Common parent no longer in existence*—(i) *Mere change in identity*. For purposes of this paragraph, the common parent corporation shall remain as the common parent irrespective of a mere change in identity, form, or place of organization of such common parent corporation (see section 368(a)(1)(F)).

(ii) *Transfer of assets to subsidiary*. The group shall be considered as remaining in existence notwithstanding that the common parent is no longer in existence if the members of the affiliated group succeed to and become the owners of substantially all of the assets of such former parent and there remains one or more chains of includible corporations connected through stock ownership with a common parent corporation which is an includible corporation and which was a member of the group prior to the date such former parent ceases to exist. For purposes of

applying paragraph (f)(2)(i) of § 1.1502–1 to separate return years ending on or before the date on which the former parent ceases to exist, such former parent, and not the new common parent, shall be considered to be the corporation described in such paragraph.

(iii) *Taxable years.* If a transfer of assets described in subdivision (ii) of this subparagraph is an acquisition to which section 381(a) applies and if the group files a consolidated return for the taxable year in which the acquisition occurs, then for purposes of section 381:

(*a*) The former common parent shall not close its taxable year merely because of the acquisition, and all taxable years of such former parent ending on or before the date of acquisition shall be treated as taxable years of the acquiring corporation, and

(*b*) The corporation acquiring the assets shall close its taxable year as of the date of acquisition, and all taxable years of such corporation ending on or before the date of acquisition shall be treated as taxable years of the transferor corporation.

(iv) *Exception.* With respect to acquisitions occurring before January 1, 1971, subdivision (iii) of this subparagraph shall not apply if the group, in its income tax return, treats the taxable year of the former common parent as having closed as of the date of acquisition.

(3) *Reverse acquisitions*—(i) *In general.* If a corporation (hereinafter referred to as the ''first corporation'') or any member of a group of which the first corporation is the common parent acquires after October 1, 1965:

(*a*) Stock of another corporation (hereinafter referred to as the second corporation), and as a result the second corporation becomes (or would become but for the application of this subparagraph) a member of a group of which the first corporation is the common parent, or

(*b*) Substantially all the assets of the second corporation,

in exchange (in whole or in part) for stock of the first corporation, and the stockholders (immediately before the acquisition) of the second corporation, as a result of owning stock of the second corporation, own (immediately after the acquisition) more than 50 percent of the fair market value of the outstanding stock of the first corporation, then any group of which the first corporation was the common parent immediately before the acquisition shall cease to exist as of the date of acquisition, and any group of which the second corporation was the common parent immediately before the acquisition shall be treated as remaining in existence (with the first corporation becoming the common parent of the group). Thus, assume that corporations P and S comprised group PS (P being the common parent), that P was merged into corporation T (the common parent of a group composed of T and corporation U), and that the shareholders of P immediately before the merger, as a result of owning stock in P, own 90 percent of the fair market value of T's stock immediately after the merger. The group of which P was the common parent is treated as continuing in existence with T and U being added as members of the group, and T taking the place of P as the common parent.

For purposes of determining under (*a*) of this subdivision whether the second corporation becomes (or would become) a member of the group of which the first corporation is the common parent, and for purposes of determining whether the former stockholders of the second corporation own more than 50 percent of the outstanding stock of the first corporation, there shall be taken into account any acquisitions or redemptions of the stock of either corporation which are pursuant to a plan of acquisition described in (*a*) or (*b*) of this subdivision.

(ii) *Prior ownership of stock.* For purposes of subdivision (i) of this subparagraph, if the first corporation, and any members of a group of which the first corporation is the common parent, have continuously owned for a period of at least 5 years ending on the date of the acquisition an aggregate of at least 25 percent of the fair market value of the outstanding stock of the second corporation, then the first corporation (and any subsidiary which owns stock of the second corporation immediately before the acquisition) shall, as a result of owning such stock, be treated as

owning (immediately after the acquisition) a percentage of the fair market value of the first corporation's outstanding stock which bears the same ratio to (*a*) the percentage of the fair market value of all the stock of the second corporation owned immediately before the acquisition by the first corporation and its subsidiaries as (*b*) the fair market value of the total outstanding stock of the second corporation immediately before the acquisition bears to (*c*) the sum of (*1*) the fair market value, immediately before the acquisition, of the total outstanding stock of the first corporation, and (*2*) the fair market value, immediately before the acquisition, of the total outstanding stock of the second corporation (other than any such stock owned by the first corporation and any of its subsidiaries). For example, assume that corporation P owns stock in corporation T having a fair market value of $100,000, that P acquires the remaining stock of T from individuals in exchange for stock of P, that immediately before the acquisition the total outstanding stock of T had a fair market value of $150,000, and that immediately before the acquisition the total outstanding stock of P had a fair market value of $200,000. Assuming P owned at least 25 percent of the fair market value of T's stock for 5 years, then for purposes of this subparagraph, P is treated as owning (immediately after the acquisition) 40 percent of the fair market value of its own outstanding stock, determined as follows:

$$[\$150,000/(\$200,000+\$50,000)]\times 662/3\%=40\%.$$

Thus, if the former individual stockholders of T own, immediately after the acquisition more than 10 percent of the fair market value of the outstanding stock of P as a result of owning stock of T, the group of which T was the common parent is treated as continuing in existence with P as the common parent, and the group of which P was the common parent before the acquisition ceases to exist.

(iii) *Election*. The provisions of subdivision (ii) of this subparagraph shall not apply to any acquisition occurring in a taxable year ending after October 7, 1969, unless the first corporation elects to have such subdivision apply. The election shall be made by means of a statement, signed by any officer who is duly authorized to act on behalf of the first corporation, stating that the corporation elects to have the provisions of §1.1502–75(d)(3)(ii) apply and identifying the acquisition to which such provisions will apply. The statement shall be filed, on or before the due date (including extensions of time) of the return for the group's first consolidated return year ending after the date of the acquisition, with the internal revenue officer with whom such return is required to be filed.

(iv) *Transfer of assets to subsidiary*. This subparagraph shall not apply to a transaction to which subparagraph (2)(ii) of this paragraph applies.

(v) *Taxable years*. If, in a transaction described in subdivision (i) of this subparagraph, the first corporation files a consolidated return for the first taxable year ending after the date of acquisition, then:

(*a*) The first corporation, and each corporation which, immediately before the acquisition, is a member of the group of which the first corporation is the common parent, shall close its taxable year as of the date of acquisition, and each such corporation shall, immediately after the acquisition, change to the taxable year of the second corporation, and

(*b*) If the acquisition is a transaction described in section 381(a)(2), then for purposes of section 381:

(*1*) All taxable years ending on or before the date of acquisition, of the first corporation and each corporation which, immediately before the acquisition, is a member of the group of which the first corporation is the common parent, shall be treated as taxable years of the transferor corporation, and

(*2*) The second corporation shall not close its taxable year merely because of such acquisition, and all taxable years ending on or before the date of acquisition, of the second corporation and each corporation which, immediately before the acquisition, is a member of any group of which the second corporation is the common parent, shall be treated as taxable years of the acquiring corporation.

(vi) *Exception*. With respect to acquisitions occurring before April 17, 1968, subdivision (v) of this subparagraph shall not apply if the parties to the transaction, in their income tax returns, treat subdivision (i) as not affecting the closing of taxable years or the operation of section 381.

(4) [Reserved]

(5) *Coordination with section 833*—(i) *Election to continue old group*. If, solely by reason of the enactment of section 833 (relating to certain Blue Cross or Blue Shield organizations and certain other health insurers), an organization to which section 833 applies (a ''section 833 organization'') became the new common parent of an old group on January 1, 1987, the old group may elect to continue in existence with that section 833 organization as its new common parent, provided all the old groups having the same section 833 organization as their new common parent elect to continue in existence. To revoke this election, see paragraph (d)(5)(x) of this section. To file as a new group, see paragraph (d)(5)(v) of this section.

(ii) *Old group*. For purposes of this paragraph (d)(5), an old group is a group which, for its last taxable year ending in 1986, either filed a consolidated return or was eligible to (but did not) file a consolidated return.

(iii) *Manner of electing to continue*—(A) *Deemed election*. If all the members of all the old groups having the same section 833 organization as their new common parent are included for the first taxable year beginning after December 31, 1986, on the same consolidated (or amended consolidated) return and a Form 1122 was not filed, the old groups are deemed to have elected under paragraph (d)(5)(i) of this section to continue in existence.

(B) *Delayed election*. If a deemed election to continue in existence was not made under paragraph (d)(5)(iii)(A) of this section, all the members of all the old groups having the same section 833 organization as their new common parent may make a delayed election under paragraph (d)(5)(i) of this section to continue in existence by:

(*1*) Filing an appropriate consolidated (or amended consolidated) return or returns for each taxable year beginning after December 31, 1986, (notwithstanding §1.1502–75(a)(1)) on or before January 3, 1991, and

(*2*) On the top of any such return prominently affixing a statement containing the following declaration: ''THIS RETURN'' (or, if applicable, ''AMENDED RETURN'') ''REFLECTS A DELAYED ELECTION TO CONTINUE UNDER §1.1502–75T(d)(5)(iii)(B)''. A delayed election to continue in existence automatically revokes a deemed election to file as a new group which was made under paragraph (d)(5)(vi) of this section.

(iv) *Effects of election to continue in existence*. If an old group or groups elect to continue in existence under paragraph (d)(5)(i) of this section, the following rules apply:

(A) *Taxable years*. Each member that filed returns other than on a calendar year basis shall close its taxable year on December 31, 1986, and change to a calendar year beginning on January 1, 1987. See section 843 and §1.1502–76(a)(1).

(B) *Carryovers from separate return limitation years*. For purposes of applying the separate return limitation year rules to carryovers from taxable years beginning before 1987 to taxable years beginning after 1986, the following rules apply:

(*1*) Any taxable year beginning before 1987 of a corporation that was not a member of an old group (including a section 833 organization) will be treated as a separate return limitation year;

(*2*) Any taxable year beginning before 1987 of a corporation that was a member of an old group that, without regard to this section and the enactment of section 833, was a separate return limitation year will continue to be treated as a separate return limitation year;

(*3*) Any taxable year beginning before 1987 of a member of an old group (other than a separate return limitation year described in paragraph (d)(5)(iv)(B)(*2*) of this section) will not be treated as a separate return limitation year with respect to any corporation that was a member of such group for each day of that taxable year; and

(*4*) Any taxable year beginning before 1987 of a member of an old group will be treated as a separate return limitation year with respect to any corporation

that was not a member of such group for each day of that taxable year (e.g., a corporation that was not a member of an old group, including a section 833 organization, or a corporation that was a member of another old group).

(C) *Five-year rules for life-nonlife groups*. Any life-nonlife election under section 1504(c)(2) in effect for an old group remains in effect. Any old group which was eligible to make a life-nonlife election will remain eligible to make the election. For purposes of section 1503(c), a nonlife member is treated as ineligible under §1.1502–47(d)(13) with respect to a life member, unless both were members of the same affiliated group (determined without regard to the exclusions in section 1504(b) (1) and (2)) for five taxable years immediately preceding the taxable year in which the loss arose. See paragraph (d)(5)(ix) of this section for a tacking rule.

(v) *Election to file as a new group*. If, solely by reason of the enactment of section 833, a section 833 organization became the new common parent of an old group on January 1, 1987, the application of the five-year prohibition on reconsolidation in section 1504(a)(3)(A) to the old group is waived and the old group together with the new section 833 organization common parent may elect to file as a new group provided that all includible corporations elect to file a consolidated (or amended consolidated) return as a new group for the first taxable year beginning after December 31, 1986. To revoke this election, see paragraph (d)(5)(x) of this section.

(vi) *Manner of electing to file as a new group*—(A) *Deemed election*. The old group or groups and the section 833 organization are deemed to have elected under paragraph (d)(5)(v) of this section to file as a new group by filing, for the first taxable year beginning after December 31, 1986, a Form 1122 and a consolidated (or amended consolidated) tax return.

(B) *Delayed election*. If a deemed election to file as a new group was not made pursuant to paragraph (d)(5)(vi)(A) of this section, the old group or groups and the section 833 organization may make a delayed election under paragraph (d)(5)(v) of this section to file as a new group by

(*1*) Filing an appropriate consolidated (or amended consolidated) return or returns for each taxable year beginning after December 31, 1986 (notwithstanding §1.1502–75(a)(1)) on or before January 3, 1991, and

(*2*) On the top of any such return prominently affixing a statement containing the following declaration: ''THIS RETURN'' (or, if applicable, ''AMENDED RETURN'') ''REFLECTS A DELAYED ELECTION TO FILE AS A NEW GROUP UNDER §1.1502–75T (d)(5)(vi)(B)''. A delayed election to file as a new group automatically revokes any deemed election to continue in existence which was made under paragraph (d)(5)(iii) of this section.

(vii) *Effects of election to file as a new group*. If an old group or groups elect to file as a new group under paragraph (d)(5)(v) of this section, the following rules apply:

(A) *Termination*. Each old group is treated as if it terminated on January 1, 1987, and the termination is not treated as resulting from the acquisition by a nonmember of all of the stock of the common parent.

(B) *Taxable years*. Each member that filed returns other than on a calendar year basis shall close its taxable year on December 31, 1986, and change to a calendar year beginning on January 1, 1987. See section 843 and §1.1502–76(a)(1).

(C) *Separate return limitation year and life-nonlife groups*. For purposes of §1.1502–1(f), sections 1503(c) and 1504(c), and §1.1502–47, the group is treated as coming into existence as a new group on January 1, 1987. Thus, for example, paragraphs (d)(5)(iv) (B) and (C) of this section do not apply.

(viii) *Earnings and profits*. All distributions after January 1, 1987 by a corporation, whether or not such corporation was a member of an old group, to an existing Blue Cross or Blue Shield organization (as defined in section 833(c)(2)) out of earnings and profits accumulated before 1987 are deemed made out of earnings and profits accumulated in pre-affiliation years. See §1.1502–32(h)(5).

(ix) *Five-year tacking rules for certain life-nonlife groups.* For purposes of applying §1.1502–47(d) (5) and (12) to any taxable year ending after 1986 to a corporation, whether or not the corporation was a member of an old group,

(A) The determination of whether the corporation was in existence and a member or tentatively treated as a member of a group, for taxable years ending before 1987, is made without regard to the exclusions under section 1504(b) (1) and (2) of any section 833 organization or life insurance company (as the case may be) and

(B) A section 833 organization is not treated as having a change in tax character solely by reason of the loss of its tax-exempt status due to the enactment of section 833.

This paragraph (d)(5)(ix) does not apply if an election to file as a new group under paragraph (d)(5)(v) of this section is made.

(x) *Time to revoke elections made before September 5, 1990.* An election by an old group to continue in existence or to file as a new group that was made (or deemed made) before September 5, 1990, may be revoked by filing an appropriate return (or returns) on or before January 3, 1991. For purposes of this paragraph (d)(5)(x), appropriate returns include separate returns filed by each member of the group or consolidated returns filed in accordance with a delayed election either under paragraph (d)(5)(iii)(B) or (vi)(B) of this section.

(xi) *Examples.* The following examples illustrate this paragraph (d)(5). In these examples, each corporation uses the calendar year as its taxable year.

Example 1. B is a section 833 organization. For several years, B has owned all of the outstanding stock of X, Y, and Z. X has owned all the outstanding stock of X_1 throughout X_1's existence and Y has owned all of the outstanding stock of Y_1 throughout Y_1's existence. For 1986 X and X_1 filed a consolidated federal income tax return but Y and Y_1 filed separate returns. Under paragraph (d)(5)(ii) of this section, X and X_1 and Y and Y_1 each constitute an old group because they either filed a consolidated return or were eligible to file a consolidated return for 1986. The X and Y groups may elect under paragraph (d)(5)(i) of this section to continue in existence. If they elect to continue, under paragraph (d)(5)(iv)(B) of this section, the separate return limitation year rules apply as follows: any taxable year of B or Z beginning before 1987 is treated as a separate return limitation year with respect to each other and to all other members of the group; any taxable year of X or X_1 beginning before 1987 is treated as a separate return limitation year with respect to B, Z, Y and Y_1, but not with respect to each other; and any taxable year of Y or Y_1 beginning before 1987 is treated as a separate return limitation year with respect to B, Z, X and X_1, but not with respect to each other.

Example 2. The facts are the same as in Example 1 except that B is owned by C, another section 833 organization. If the X and Y groups elect to continue, the results are the same as in Example 1, except that, under paragraph (d)(5)(iv)(B)(*1*) of this section, for purposes of applying the separate return limitation year rules, any taxable year of C beginning before 1987 is also treated as a separate return limitation year with respect to all other members of the group.

Example 3. The facts are the same as in Example 1 except that Y purchased Y_1 on January 1, 1985. If the X and Y groups elect to continue, the results are the same as in Example 1, except that, under paragraph (d)(5)(iv)(B)(*2*) of this section, for purposes of applying the separate return limitation year rules, any taxable year of Y_1 beginning before 1985 is treated as a separate return limitation year with respect to Y as well as with respect to all other members of the group.

Example 4. B, a section 833 organization, has owned all the stock of X since November 1984. X has owned all the stock of L, a life insurance company, throughout L's existence. In 1986, X and L properly filed a life-nonlife consolidated return. Under paragraph (d)(5)(i) of this section, the X group elects to continue in existence. Under paragraph (d)(5)(iv)(C) of this section, the life-nonlife election will remain in effect. However, losses of B which arise before 1990 cannot be used to offset the income of L. See section 1503(c)(2) and §1.1502–47(d)(13) and paragraph (d)(5)(iv)(C) of this section. Under paragraph (d)(5)(iv)(B) of this section, the separate return limitation year rules apply as follows: any taxable year of B beginning before 1987 is treated as a separate return limitation year with respect to all other members of the group; and any taxable year of X or L beginning before 1987 is treated as a separate return limitation year with respect to B, but not with respect to each other.

Example 5. The facts are the same as Example 4 except that, on January 1, 1984, B formed L_1, a life insurance company. Under paragraph (d)(5)(ix) of this section and section 1504(c), the first year L_1 is eligible to join in B's life-nonlife election is 1989.

Example 6. The facts are the same as in Example 4 except that B and the X group elect under paragraph (d)(5)(v) of this section to file as a new group. The X group will be considered to have terminated under §1.1502–

75(d)(1) on December 31, 1986. X and L are each separately subject to the separate return limitation year rules of § 1.1502–1(f). The first year L and L_1 are eligible to join the new group in a life-nonlife election is 1992 (five years after the new group is formed). See section 1504(c)(2) and paragraphs (d)(5)(vii)(C) and (ix) of this section.

The provisions contained in this Treasury decision are needed to immediately amend the consolidated return regulations in response to changes made by section 1012 of the Tax Reform Act of 1986. It is therefore found impracticable and contrary to the public interest to issue this Treasury decision with notice and public procedure under section 553(b) of title 5 of the United States Code or subject to the effective date limitations of section 553(d) of title 5, United States Code.

(e) *Failure to include subsidiary*. If a consolidated return is required for the taxable year under the provisions of paragraph (a)(2) of this section, the tax liability of all members of the group for such year shall be computed on a consolidated basis even though:

(1) Separate returns are filed by one or more members of the group, or

(2) There has been a failure to include in the consolidated return the income of any member of the group.

If subparagraph (1) of this paragraph applies, the amounts assessed or paid upon the basis of separate returns shall be considered as having been assessed or paid upon the basis of a consolidated return.

(f) *Inclusion of one or more corporations not members of the group*—(1) *Method of determining tax liability*. If a consolidated return includes the income of a corporation which was not a member of the group at any time during the consolidated return year, the tax liability of such corporation will be determined upon the basis of a separate return (or a consolidated return of another group, if paragraph (a)(2) or (b)(3) of this section applies), and the consolidated return will be considered as including only the income of the corporations which were members of the group during that taxable year. If a consolidated return includes the income of two or more corporations which were not members of the group but which constitute another group, the tax liability of such corporations will be computed in the same manner as if separate returns had been made by such corporations unless the Commissioner upon application approves the making of a consolidated return for the other group or unless under paragraph (a)(2) of this section a consolidated return is required for the other group.

(2) *Allocation of tax liability*. In any case in which amounts have been assessed and paid upon the basis of a consolidated return and the tax liability of one or more of the corporations included in the consolidated return is to be computed in the manner described in subparagraph (1) of this paragraph, the amounts so paid shall be allocated between the group composed of the corporations properly included in the consolidated return and each of the corporations the tax liability of which is to be computed on a separate basis (or on the basis of a consolidated return of another group) in such manner as the corporations which were included in the consolidated return may, subject to the approval of the Commissioner, agree upon or in the absence of an agreement upon the method used in allocating the tax liability of the members of the group under the provisions of section 1552(a).

(g) *Computing periods of limitation*—(1) *Income incorrectly included in consolidated return*. If:

(i) A consolidated return is filed by a group for the taxable year, and

(ii) The tax liability of a corporation whose income is included in such return must be computed on the basis of a separate return (or on the basis of a consolidated return with another group), then for the purpose of computing any period of limitation with respect to such separate return (or such other consolidated return), the filing of such consolidated return by the group shall be considered as the making of a return by such corporation.

(2) *Income incorrectly included in separate returns*. If a consolidated return is required for the taxable year under the provisions of paragraph (a)(2) of this section, the filing of separate returns by the members of the group for such year shall not be considered as the making of a return for the purpose of computing any period of limitation

with respect to such consolidated return unless there is attached to each such separate return a statement setting forth:

(i) The most recent taxable year of the member for which its income was included in a consolidated return, and

(ii) The reasons for the group's belief that a consolidated return is not required for the taxable year.

(h) *Method of filing return and forms*—(1) *Consolidated return made by common parent corporation*. The consolidated return shall be made on Form 1120 for the group by the common parent corporation. The consolidated return, with Form 851 (affiliations schedule) attached, shall be filed with the district director with whom the common parent would have filed a separate return.

(2) *Filing of Form 1122 for first year*. If, under the provisions of paragraph (a)(1) of this section, a group wishes to file a consolidated return for a taxable year, then a Form 1122 (''Authorization and Consent of Subsidiary Corporation To Be Included in a Consolidated Income Tax Return'') must be executed by each subsidiary. For taxable years beginning before January 1, 2003, the executed Forms 1122 must be attached to the consolidated return for the taxable year. For taxable years beginning after December 31, 2002, the group must attach either executed Forms 1122 or unsigned copies of the completed Forms 1122 to the consolidated return. If the group submits unsigned Forms 1122 with its return, it must retain the signed originals in its records in the manner required by §1.6001–1(e). Form 1122 is not required for a taxable year if a consolidated return was filed (or was required to be filed) by the group for the immediately preceding taxable year.

(3) *Persons qualified to execute returns and forms*. Each return or form required to be made or prepared by a corporation must be executed by the person authorized under section 6062 to execute returns of separate corporations.

(i) [Reserved]

(j) *Statements and schedules for subsidiaries*. The statement of gross income and deductions and the schedules required by the instructions on the return shall be prepared and filed in columnar form so that the details of the items of gross income, deductions, and credits for each member may be readily audited. Such statements and schedules shall include in columnar form a reconciliation of surplus for each corporation, and a reconciliation of consolidated surplus. Consolidated balance sheets as of the beginning and close of the taxable year of the group, taken from the books of the members, shall accompany the consolidated return and shall be prepared in a form similar to that required for reconciliation of surplus.

(k) *Cross-reference*. See §1.338(h)(10)–1(d)(7) for special rules regarding filing consolidated returns when a section 338(h)(10) election is made for a target acquired from a selling consolidated group.

(l) *Effective/applicability dates*. Paragraph (d)(1) of this section applies to taxable years for which the due date of the original return (without regard to extensions) is on or after September 17, 2008.

[T.D. 6894, 31 FR 11794, Sept. 8, 1966]

EDITORIAL NOTE: For FEDERAL REGISTER citations affecting §1.1502–75, see the List of CFR Sections Affected, which appears in the Finding Aids section of the printed volume and at *www.fdsys.gov*.

§ 1.1502–76 Taxable year of members of group.

(a) *Taxable year of members of group*. The consolidated return of a group must be filed on the basis of the common parent's taxable year, and each subsidiary must adopt the common parent's annual accounting period for the first consolidated return year for which the subsidiary's income is includible in the consolidated return. If any member is on a 52–53-week taxable year, the rule of the preceding sentence shall, with the advance consent of the Commissioner, be deemed satisfied if the taxable years of all members of the group end within the same 7-day period. Any request for such consent shall be filed with the Commissioner of Internal Revenue, Washington, DC 20224, not later than the 30th day before the due date (not including extensions of time) for the filing of the consolidated return.

(b) *Items included in the consolidated return*—(1) *General rules*—(i) *In general*.

A consolidated return must include the common parent's items of income, gain, deduction, loss, and credit for the entire consolidated return year, and each subsidiary's items for the portion of the year for which it is a member. If the consolidated return includes the items of a corporation for only a portion of its tax year determined without taking this section into account, items for the portion of the year not included in the consolidated return must be included in a separate return (including the consolidated return of another group). The rules of this paragraph (b) must be applied to prevent the duplication or elimination of the corporation's items.

(ii) *The day a corporation becomes or ceases to be a member*—(A) *End of the day rule.* (*1*) *In general.* If a corporation (S), other than one described in paragraph (b)(1)(ii)(A)(*2*) of this section, becomes or ceases to be a member during a consolidated return year, it becomes or ceases to be a member at the end of the day on which its status as a member changes, and its tax year ends for all Federal income tax purposes at the end of that day. Appropriate adjustments must be made if another provision of the Internal Revenue Code or the regulations thereunder contemplates the event occurring before or after S's change in status. For example, S's items restored under §1.1502–13 immediately before it becomes a nonmember are taken into account in determining the basis of S's stock under §1.1502–32. On the other hand, if a section 338(g) election is made in connection with S becoming a member, the deemed asset sale under that section takes place before S becomes a member. See §1.338–10(a)(5) (deemed sale excluded from purchasing corporation's consolidated return.)

(*2*) *Special rule for former S corporations.* If S becomes a member in a transaction other than in a qualified stock purchase for which an election under section 338(g) is made, and immediately before becoming a member an election under section 1362(a) was in effect, then S will become a member at the beginning of the day the termination of its S corporation election is effective. S's tax year ends for all Federal income tax purposes at the end of the preceding day. This paragraph (b)(1)(ii)(A)(*2*) applies to transactions occurring after November 10, 1999.

(B) *Next day rule.* If, on the day of S's change in status as a member, a transaction occurs that is properly allocable to the portion of S's day after the event resulting in the change, S and all persons related to S under section 267(b) immediately after the event must treat the transaction for all Federal income tax purposes as occurring at the beginning of the following day. A determination as to whether a transaction is properly allocable to the portion of S's day after the event will be respected if it is reasonable and consistently applied by all affected persons. In determining whether an allocation is reasonable, the following factors are among those to be considered—

(*1*) Whether income, gain, deduction, loss, and credit are allocated inconsistently (e.g., to maximize a seller's stock basis adjustments under §1.1502–32);

(*2*) If the item is from a transaction with respect to S stock, whether it reflects ownership of the stock before or after the event (e.g., if a member transfers encumbered land to nonmember S in exchange for additional S stock in a transaction to which section 351 applies and the exchange results in S becoming a member of the consolidated group, the applicability of section 357(c) to the exchange must be determined under §1.1502–80(d) by treating the exchange as occurring after the event; on the other hand, if S is a member but has a minority shareholder and becomes a nonmember as a result of its redemption of stock with appreciated property, S's gain under section 311 is treated as from a transaction occurring before the event);

(*3*) Whether the allocation is inconsistent with other requirements under the Internal Revenue Code and regulations promulgated thereunder (e.g., if a section 338(g) election is made in connection with a group's acquisition of S, the deemed asset sale must take place before S becomes a member and S's gain or loss with respect to its assets must be taken into account by S as a nonmember (but see §1.338–1(d)), or if S

realizes discharge of indebtedness income that is excluded from gross income under section 108(a) on the day it becomes a nonmember, the discharge of indebtedness income must be treated as realized by S as a member (see § 1.1502–28(b)(11))); and

(*4*) Whether other facts exist, such as a prearranged transaction or multiple changes in S's status, indicating that the transaction is not properly allocable to the portion of S's day after the event resulting in S's change.

(C) *Successor corporations.* For purposes of this paragraph (b)(1)(ii), any reference to a corporation includes a reference to a successor or predecessor as the context may require. A corporation is a successor if the basis of its assets is determined, directly or indirectly, in whole or in part, by reference to the basis of the assets of another corporation (the predecessor). For example, if a member forms S, S is treated as a member from the beginning of its existence.

(iii) *Group structure changes.* If the common parent ceases to be the common parent but the group remains in existence, adjustments must be made in accordance with the principles of § 1.1502–75(d)(2) and (3).

(2) *Determination of items included in separate and consolidated returns*—(i) *In general.* The returns for the years that end and begin with S becoming (or ceasing to be) a member are separate tax years for all Federal income tax purposes. The returns are subject to the rules of the Internal Revenue Code applicable to short periods, as if S ceased to exist on becoming a member (or first existed on becoming a nonmember). For example, cost recovery deductions under section 168 must be allocated for short periods. On the other hand, annualization under section 443 is not required of S solely because it has a short year as a result of becoming a member. (Similarly, section 443 applies with respect to a consolidated return only to the extent that the group's return is for a short period and section 443 applies without taking this paragraph (b) into account.)

(ii) *Ratable allocation of a year's items*—(A) *Application.* Although the periods ending and beginning with S's change in status are different tax years, items (other than extraordinary items) may be ratably allocated between the periods if—

(*1*) S is not required to change its annual accounting period or its method of accounting as a result of its change in status (e.g., because its stock is sold between consolidated groups that have the same annual accounting periods); and

(*2*) An irrevocable ratable allocation election is made under paragraph (b)(2)(ii)(D) of this section.

(B) *General rule*—(*1*) *Allocation within original year.* Under a ratable allocation election, paragraph (b)(2) of this section applies by allocating to each day of S's original year (S's tax year determined without taking this section into account) an equal portion of S's items taken into account in the original year, except that extraordinary items must be allocated to the day that they are taken into account. All persons affected by the election must take into account S's extraordinary items and the ratable allocation of S's remaining items in a manner consistent with the election.

(*2*) *Items to be allocated.* Under ratable allocation, the items to be allocated and their timing, location, character, and source are generally determined by treating the original year as a single tax year, and the items are not subject to the rules of the Internal Revenue Code applicable to short periods (unless the original year is a short period). However, the years ending and beginning with S's change in status are treated as different tax years (and as short periods) with respect to any item carried to or from these years (e.g., a net operating loss carried under section 172) and with respect to the application of section 481.

(*3*) *Multiple applications.* If this paragraph (b) applies more than once with respect to an original year, adjustments must be made in accordance with the principles of this paragraph (b). For example, if S becomes a member of two different consolidated groups during the same original year and ratable allocation is elected with respect to both groups, ratable allocation is generally determined for both groups by treating the original year as

a single tax year; however, if ratable allocation is elected only with respect to the first group, the ratable allocation is determined by treating the original year as a short period that does not include the period that S is a member of the second group. Ratable allocation is not a method of accounting, and ratable allocation with respect to one application of this paragraph (b) to S does not require ratable allocation to be subsequently applied with respect to S.

(C) *Extraordinary items.* An extraordinary item is—

(*1*) Any item from the disposition or abandonment of a capital asset as defined in section 1221 (determined without the application of any other rules of law);

(*2*) Any item from the disposition or abandonment of property used in a trade or business as defined in section 1231(b) (determined without the application of any holding period requirement);

(*3*) Any item from the disposition or abandonment of an asset described in section 1221(1), (3), (4), or (5), if substantially all the assets in the same category from the same trade or business are disposed of or abandoned in one transaction (or series of related transactions);

(*4*) Any item from assets disposed of in an applicable asset acquisition under section 1060(c);

(*5*) Any item carried to or from any portion of the original year (e.g., a net operating loss carried under section 172), and any section 481(a) adjustment;

(*6*) The effects of any change in accounting method initiated by the filing of the appropriate form after S's change in status;

(*7*) Any item from the discharge or retirement of indebtedness (e.g., cancellation of indebtedness income or a deduction for retirement at a premium);

(*8*) Any item from the settlement of a tort or similar third-party liability;

(*9*) Any compensation-related deduction in connection with S's change in status (including, for example, deductions from bonus, severance, and option cancellation payments made in connection with S's change in status);

(*10*) Any dividend income from a nonmember that S controls within the meaning of section 304 at the time the dividend is taken into account;

(*11*) Any deemed income inclusion from a foreign corporation, or any deferred tax amount on an excess distribution from a passive foreign investment company under section 1291;

(*12*) Any interest expense allocable under section 172(h) to a corporate equity reduction transaction causing this paragraph (b) to apply;

(*13*) Any credit, to the extent it arises from activities or items that are not ratably allocated (e.g., the rehabilitation credit under section 47, which is based on placement in service); and

(*14*) Any item which, in the opinion of the Commissioner, would, if ratably allocated, result in a substantial distortion of income in any consolidated return or separate return in which the item is included.

(D) *Election—(1) Statement.* The election to ratably allocate items under this paragraph (b)(2)(ii) must be made in a separate statement entitled, ''THIS IS AN ELECTION UNDER § 1.1502–76(b)(2)(ii) TO RATABLY ALLOCATE THE YEAR'S ITEMS OF [INSERT NAME AND EMPLOYER IDENTIFICATION NUMBER OF THE MEMBER].'' The election must be filed by including a statement on or with the returns including the items for the years ending and beginning with S's change in status. If two or more members of the same consolidated group, as a consequence of the same plan or arrangement, cease to be members of that group and remain affiliated as members of another consolidated group, an election under this paragraph (b)(2)(ii)(D)(*1*) may be made only if it is made by each such member. Each statement must also indicate that an agreement, as described in paragraph (b)(2)(ii)(D)(*2*) of this section, has been entered into. Each party signing the agreement must retain either the original or a copy of the agreement as part of its records. See § 1.6001–1(e).

(*2*) *Agreement.* For each election under this paragraph (b)(2)(ii), the member and the common parent of each affected group must sign and date an agreement. The agreement must—

(*i*) Identify the extraordinary items, their amounts, and the separate or consolidated returns in which they are included;

(*ii*) Identify the aggregate amount to be ratably allocated, and the portion of the amount included in the separate and consolidated returns; and

(*iii*) Include the name and employer identification number of the common parent (if any) of each group that must take the items into account.

(iii) *Ratable allocation of a month's items*. If ratable allocation under paragraph (b)(2)(ii) of this section is not elected (e.g., because S is required to change its annual accounting period), this paragraph (b)(2)(iii) may be applied to ratably allocate only S's items taken into account in the month of its change in status, but only if the allocation is consistently applied by all affected persons. The ratable allocation is made by applying the principles of paragraph (b)(2)(ii) of this section under any reasonable method. For example, S may close its books both at the end of the preceding month and at the end of the month of the change, and allocate only its items (other than extraordinary items) from the month of the change. See paragraph (b)(1)(ii)(B) of this section for factors to be considered in determining whether the method is reasonable.

(iv) *Taxes*. To the extent properly taken into account during the member's tax year (determined without the application of this paragraph (b)), Federal, state, local, and foreign taxes are allocated under paragraph (b)(2) of this section on the basis of the items or activities to which the taxes relate. Thus, income tax is allocated based on the inclusion of the income (determined under the principles of this paragraph (b)) to which the tax relates. For example, if a calendar-year domestic corporation has $100 of foreign source dividend income (determined in accordance with United States tax accounting principles but without taking this paragraph (b) into account) that is passive income for purposes of section 904, and $60 of the income is allocated under this paragraph (b) to the period of the calendar year after it becomes a member of a consolidated group, then 60% of the corporation's deemed paid foreign tax credit associated with its dividend income for the calendar year is taken into account in computing the group's passive basket consolidated foreign tax credit. Similarly, property taxes relate to the ownership of property and are allocated over the period that the property is owned. This paragraph (b)(2)(iv) applies without regard to any determination or allocation by another taxing jurisdiction.

(v) *Acquisition of S corporation*. If a corporation is acquired in a transaction to which paragraph (b)(1)(ii)(A)(*2*) of this section applies, then paragraphs (b)(2)(ii) and (iii) of this section do not apply and items of income, gain, loss, deduction, and credit are assigned to each short taxable year on the basis of the corporation's normal method of accounting as determined under section 446. This paragraph (b)(2)(v) applies to transactions occurring after November 10, 1999.

(vi) *Passthrough entities*—(A) *In general*. If S is a partner in a partnership or an owner of a similar interest with respect to which items of the entity are taken into account by S, S is treated, solely for purposes of determining the year to which the entity's items are allocated under paragraph (b)(2) of this section, as selling or exchanging its entire interest in the entity immediately before S's change in status.

(B) *Treatment as a conduit*. For purposes of this paragraph (b)(2), if a member (together with other members) would be treated under section 318(a)(2) as owning an aggregate of at least 50% of any stock owned by the passthrough entity, the method that is used to determine the inclusion of the entity's items in the consolidated or separate return must be the same method that is used to determine the inclusion of the member's items in the consolidated or separate return.

(C) *Exception for certain foreign entities*. This paragraph (b)(2)(v) does not apply to any foreign corporation generating the deemed inclusion of income, or to any passive foreign investment company generating a deferred tax amount on an excess distribution under section 1291.

(3) *Anti-avoidance rule*. If any person acts with a principal purpose contrary to the purposes of this paragraph (b),

to substantially reduce the Federal income tax liability of any person, adjustments must be made as necessary to carry out the purposes of this section.

(4) *Determination of due date for separate return.* Paragraph (c) of this section contains rules for the filing of the separate return referred to in this paragraph (b). In applying paragraph (c) of this section, the due date for the filing of S's separate return shall also be determined without regard to the ending of the tax year under paragraph (b)(1)(ii) of this section or the deemed cessation of its existence under paragraph (b)(2)(i) of this section.

(5) *Examples.* For purposes of the examples in this paragraph (b), unless otherwise stated, P and X are common parents of calendar-year consolidated groups, P owns all of the only class of T's stock, T owns no stock of lower-tier members, all persons use the accrual method of accounting, the facts set forth the only corporate activity, all transactions are between unrelated persons, tax liabilities are disregarded, and any election required under paragraph (b)(2) of this section is properly made. The principles of this paragraph (b) are illustrated by the following examples.

Example 1. Items allocated between consolidated and separate returns. (a) *Facts.* P and S are the only members of the P group. P sells all of S's stock to individual A on June 30, and therefore S becomes a nonmember on July 1 of Year 2.

(b) *Analysis.* Under paragraph (b)(1) of this section, the P group's consolidated return for Year 2 includes P's income for the entire tax year and S's income for the period from January 1 to June 30, and S must file a separate return for the period from July 1 to December 31.

(c) *Acquisition of another subsidiary before end of tax year.* The facts are the same as in paragraph (a) of this *Example 1,* except that on July 31 P acquires all the stock of T (which filed a separate return for its year ending on November 30 of Year 1) and T therefore becomes a member on August 1 of Year 2. Under §1.1502–75(d) and paragraph (b)(1) of this section, the P group's consolidated return for Year 2 includes P's income for the entire year, S's income from January 1 to June 30, and T's income from August 1 to December 31. S must file a separate return that includes its income from July 1 to December 31, and T must file a separate return that includes its income from December 1 of Year 1 to July 31 of Year 2. (If P had acquired T after December 31, the P group that included S is a different group from the P group that includes T, and, for example, the P group that includes T must make a separate election under section 1501 and §1.1502–75 if consolidated returns are to be filed.)

Example 2. Group structure change. (a) *Facts.* P owns all of the stock of S and T. Shortly after the beginning of Year 1, P merges into T in a reorganization described in section 368(a)(1)(A) (and in section 368(a)(1)(D)), and P's shareholders receive T's stock in exchange for all of P's stock. The P group is treated under §1.1502–75(d)(2)(ii) as remaining in existence with T as its common parent.

(b) *Analysis.* Under paragraph (b)(1) of this section, the P group's return must include the common parent's items for the entire consolidated return year and, if the common parent ceases to be the common parent but the group remains in existence, appropriate adjustments must be made. Consequently, although P did not exist for all of Year 1, P's items for the portion of Year 1 ending with the merger are treated as the items of the common parent that must be included in the P group's return for Year 1.

(c) *Reverse acquisition.* Assume instead that X acquires all of P's assets in exchange for more than 50% of X's stock in a reorganization described in section 368(a)(1)(D). The reorganization constitutes a reverse acquisition under §1.1502–75(d)(3), with the X group terminating and the P group surviving with X as its common parent. Consequently, P's items for the portion of Year 1 ending with the acquisition are treated as the items of the common parent that must be included in the P group's return for Year 1, and X's items are treated for purposes of paragraph (b)(1) of this section as the items of a subsidiary included in the P group's return for the portion of Year 1 for which X is a member.

Example 3. Ratable allocation. (a) *Facts.* P sells all of T's stock to X, and T becomes a nonmember on July 1 of Year 1. T engages in the production and sale of merchandise throughout Year 1 and is required to use inventories. The sale is treated as causing T's tax year to end on June 30, and the periods beginning and ending with the sale are treated as two tax years for Federal income tax purposes.

(b) *Analysis.* If ratable allocation under paragraph (b)(2)(ii) of this section is not elected, T must perform an inventory valuation as of the acquisition and also as of the end of Year 1. If ratable allocation is elected, T must perform an inventory valuation only as of the close of Year 1, and T's income from inventory is ratably allocated, along with T's other items that are not extraordinary items, between the P and X consolidated returns.

(c) *Merger into nonmember*. Assume instead that T merges into a wholly owned subsidiary of X in a reorganization described in section 368(a)(2)(D), and P receives 10% of X's stock in exchange for all of T's stock. Under paragraph (b)(2)(ii)(B) of this section, because T's tax year ends on June 30 under section 381(b)(1), T's original year determined without taking paragraph (b) of this section into account also ends on June 30. Consequently, a ratable allocation under paragraph (b)(2)(ii) of this section is the same as an allocation based on closing the books.

Example 4. Net operating loss. P sells all of T's stock to X, T becomes a nonmember on June 30 of Year 1, and ratable allocation under paragraph (b)(2)(ii) of this section is elected. Under ratable allocation, the X group has a $100 consolidated net operating loss for Year 1, all of which is attributable to T. However, because of extraordinary items, T has $100 of income for the portion of Year 1 that T is a member of the P group. Under paragraph (b)(2)(ii)(B)(*2*) of this section, T's loss may be carried back from the X group to the portion of Year 1 that T was a member of the P group. See also section 172 and § 1.1502–21(b). Under paragraph (b)(2)(ii)(C)(*5*) of this section, any item carried to or from any portion of the original year is an extraordinary item, and the loss therefore is not taken into account again in determining the ratable allocation under paragraph (b)(2)(ii) of this section.

Example 5. Employee benefit plans. (a) *Facts*. P sells all of T's stock to X, and T becomes a nonmember on June 30 of Year 1. On March 15 of Year 2, T contributes $100 to its retirement plan, which is a qualified plan under section 401(a). T is not required to make quarterly contributions to the plan for Year 1 under section 412(m). The contribution is made on account of T's taxable period beginning on July 1 of Year 1, and is deemed in accordance with section 404(a)(6) to have been made on the last day of T's taxable period beginning on July 1 of Year 1. Ratable allocation under paragraph (b)(2)(ii) of this section is not elected.

(b) *Analysis*. Under paragraph (b) of this section, the sale is treated as causing T's tax year to end on June 30, and the period beginning on July 1 is treated as a separate annual accounting period for all Federal income tax purposes. T's income from January 1 to June 30 is included in the P group's Year 1 return, and T's income from July 1 to December 31 is included in the X group's Year 1 return. Thus, the $100 contribution is deductible by T for the period of Year 1 that it is a member of the X group, subject to the applicable limitations of section 404, if a contribution on the last day of that period would otherwise be deductible.

(c) The facts are the same as in paragraph (a) of this *Example 5*, except that, in accordance with section 404(a)(6), $40 of the $100 contribution is made on account of T's taxable period beginning on January 1 of Year 1 and is deemed to be made on the last day of T's taxable period beginning on January 1 of Year 1. The remaining $60 is made on account of T's taxable period beginning on July 1 of Year 1 and is deemed to be made on the last day of T's taxable period beginning on July 1 of Year 1. As in paragraph (b) of this *Example 5*, under paragraph (b) of this section, the sale is treated as causing T's tax year to end on June 30, and the period beginning on July 1 is treated as a separate annual accounting period for all Federal income tax purposes. The $40 portion of the contribution is deductible by T for the period of Year 1 that it is a member of the P group, subject to the applicable limitations of section 404 and provided that a $40 contribution on the last day of that period would otherwise be deductible for that period, and the $60 portion is deductible by T for the period of Year 1 that it is a member of the X group, subject to the same conditions.

(d) *Ratable allocation*. The facts are the same as in paragraph (a) of this *Example 5*, except that P, T, and X elect ratable allocation under paragraph (b)(2)(ii) of this section and T's deduction for the retirement plan contribution is not an extraordinary item. T's deduction may be ratably allocated, subject to the applicable limitations of section 404, and is allowable only if a contribution on the last day of Year 1 otherwise would be deductible for any period in the year. (The results would be the same if S were an unaffiliated corporation when acquired by X, and the due date of its last separate return (including extensions) were before the pension contribution was made on March 15 of Year 2.)

Example 6. Allocation of partnership items. (a) *Facts*. P sells all of T's stock to X, and T becomes a nonmember on June 30 of Year 1. T has a 10% interest in the capital and profits of a calendar-year partnership.

(b) *Analysis*. Under paragraph (b)(2)(vi)(A) of this section, T is treated, solely for purposes of determining T's tax year in which the partnership's items are included, as selling or exchanging its entire interest in the partnership as of P's sale of T's stock. Thus, the deemed disposition is not taken into account under section 708, it does not result in gain or loss being recognized by T, and T's holding period is unaffected. However, under section 706(a), in determining T's income, T is required to include its distributive share of partnership items for the partnership's year ending within or with T's tax year. Under section 706(c)(2), the partnership's tax year is treated as closing with respect to T for this purpose as of P's sale of T's stock. The allocation of T's distributive share of partnership items must be made under § 1.706–1(c)(2)(ii).

(c) *Controlled partnership.* The facts are the same as in paragraph (a) of this *Example 6*, except that T has a 75% interest in the capital and profits of the partnership. Under paragraph (b)(2)(vi)(B) of this section, T's distributive share of the partnership items is treated as T's items for purposes of paragraph (b)(2) of this section. Thus, if ratable allocation under paragraph (b)(2)(ii) of this section is not elected, T's distributive share of the partnership's items must be determined under §1.706–1(c)(2)(ii) by an interim closing of the partnership's books. Similarly, if ratable allocation is elected for T's items that are not extraordinary items, T's distributive share of the partnership's nonextraordinary items must also be ratably allocated under §1.706–1(c)(2)(ii).

Example 7. Acquisition of S corporation. (a) *Facts.* Z is a small business corporation for which an election under section 1362(a) was in effect at all times since Year 1. At all times, Z had only 100 shares of stock outstanding, all of which were owned by individual A. On July 1 of Year 3, P acquired all of the Z stock. P does not make an election under section 338(g) with respect to its purchase of the Z stock.

(b) *Analysis.* As a result of P's acquisition of the Z stock, Z's election under section 1362(a) terminates. See sections 1361(b)(1)(B) and 1362(d)(2). Z is required to join in the filing of the P consolidated return. See §1.1502–75. Z's tax year ends for all Federal income tax purposes on June 30 of Year 3. If no extension of time is sought, Z must file a separate return for the period from January 1 through June 30 of Year 3 on or before March 15 of Year 4. See paragraph (b)(4) of this section. Z will become a member of the P consolidated group as of July 1 of Year 3. See paragraph (b)(1)(ii)(A)(*2*) of this section. P group's Year 3 consolidated return will include Z's items from July 1 to December 31 of Year 3.

(6) *Effective date*—(i) *General rule.* Except as provided in paragraphs (b)(1)(ii)(A)(2) and (b)(2)(v) of this section, this paragraph (b) applies to corporations becoming or ceasing to be members of consolidated groups on or after January 1, 1995.

(ii) *Prior law.* For prior transactions, see prior regulations under section 1502 as in effect with respect to the transaction. See, e.g., §1.1502–76(b) and (d) as contained in the 26 CFR part 1 edition revised as of April 1, 1994. However, §1.1502–76(b)(5) and (6) as contained in the 26 CFR part 1 edition revised as of April 1, 1994 do not apply with respect to corporations becoming or ceasing to be members of consolidated groups on or after January 1, 1995. If both this paragraph (b) and prior law may apply to determine the inclusion of any amount in a return, appropriate adjustments must be made to prevent the omission or duplication of the amount.

(c) *Time for making separate returns for periods not included in consolidated return*—(1) *Consolidated return filed by due date for separate return.* If the group has filed a consolidated return on or before the due date for the filing of a subsidiary's separate return (including extensions of time and determined without regard to any change of its taxable year required under paragraph (a) of this section), then the separate return for any portion of the subsidiary's taxable year for which its income is not included in the consolidated return of the group must be filed no later than the due date of such consolidated return (including extensions of time).

(2) *Consolidated return not filed by due date for separate return.* If the group has not filed a consolidated return on or before the due date for the filing of a subsidiary corporation's separate return (including extensions of time and determined without regard to any change of its taxable year required under paragraph (a) of this section), then on or before such due date such subsidiary shall file a separate return either for the portion of its taxable year for which its income would not be included in a consolidated return if such a return were filed, or for its complete taxable year. However, if a separate return is filed for such portion of its taxable year and the group subsequently does not file a consolidated return, such subsidiary corporation shall file a substituted return for its complete taxable year not later than the due date (including extensions of time) prescribed for the filing of the common parent's return. On the other hand, if the return is filed for the subsidiary's complete taxable year and the group later files a consolidated return, such subsidiary must file an amended return not later than the due date (including extensions of time) for the filing of the consolidated return of the group. Such amended return shall be for that portion of such subsidiary's taxable year which is not included in the consolidated return. If, under this subparagraph, a substituted return must be

filed, then the return previously filed shall not be considered a return within the meaning of section 6011. If, under this subparagraph, a substituted or amended return must be filed, then, for purposes of sections 6513(a) and 6601(a), the last date prescribed for payment of tax shall be the due date (not including extensions of time) for the filing of the subsidiary's separate return (determined without regard to this subparagraph and without regard to any change of its taxable year required under paragraph (a) of this section).

(3) *Examples*. The provisions of this paragraph may be illustrated by the following examples:

Example 1. Corporation P, which filed a separate return for the calendar year 1966, acquires all of the stock of corporation S as of the close of December 31, 1966. Corporation S reports its income on the basis of a fiscal year ending March 31. On June 15, 1967, the due date for the filing of a separate return by S (assuming no extensions of time), a consolidated return has not been filed for the group (P and S). On such date S may either file a return for the period April 1, 1966, through December 31, 1966, or it may file a return for the complete fiscal year ending March 31, 1967. If S files a return for the short period ending December 31, 1966, and if the group elects not to file a consolidated return for the calendar year 1967, S, on or before March 15, 1968 (the due date of P's return, assuming no extensions of time), must file a substituted return for the complete fiscal year ending March 31, 1967, in lieu of the return previously filed for the short period. Interest is computed from June 15, 1967. If, however, S files a return for the complete fiscal year ending March 31, 1967, and the group elects to file a consolidated return for the calendar year 1967, then S must file an amended return covering the period from April 1, 1966, through December 31, 1966, in lieu of the return previously filed for the complete fiscal year. Interest is computed from June 15, 1967.

Example 2. Assume the same facts as in example (1) except that corporation P acquires all of the stock of corporation S at the close of September 30, 1967, and that P files a consolidated return for the group for 1967 on March 15, 1968 (not having obtained any extensions of time). Since a consolidated return has been filed on or before the due date (June 15, 1968) for the filing of the separate return for the taxable year ending March 31, 1968, the return of S for the short taxable year beginning April 1, 1967, and ending September 30, 1967, should be filed no later than March 15, 1968.

(d) *Effective/applicability date*—(1) *Taxable years of members of group effective date*. (i) *In general*. Paragraph (a) of this section applies to any original consolidated Federal income tax return due (without extensions) after July 20, 2007.

(ii) *Prior law*. For original consolidated Federal income tax returns due (without extensions) after April 25, 2006, and on or before July 20, 2007, see § 1.1502–76T as contained in 26 CFR part 1 in effect on April 1, 2007. For original consolidated Federal income tax returns due (without extensions) on or before April 25, 2006, see § 1.1502–76 as contained in 26 CFR part 1 in effect on April 1, 2006.

(2) *Election to ratably allocate items effective date*—(i) *In general*. Paragraph (b)(2)(ii)(D) of this section applies to any original consolidated Federal income tax return due (without extensions) after July 20, 2007.

(ii) *Prior law*. For original consolidated Federal income tax returns due (without extensions) after May 30, 2006, and on or before July 20, 2007, see § 1.1502–76T as contained in 26 CFR part 1 in effect on April 1, 2007. For original consolidated Federal income tax returns due (without extensions) on or before May 30, 2006, see § 1.1502–76 as contained in 26 CFR part 1 in effect on April 1, 2006.

[T.D. 6894, 31 FR 11794, Sept. 8, 1966]

EDITORIAL NOTE: For FEDERAL REGISTER citations affecting § 1.1502–76, see the List of CFR Sections Affected, which appears in the Finding Aids section of the printed volume and at *www.fdsys.gov*.

§ 1.1502–77 Agent for the group.

(a) *Agent for the group*—(1) *Sole agent*. Except as provided in paragraphs (e) and (f)(2) of this section, one entity (the agent) is the sole agent that is authorized to act in its own name regarding all matters relating to the federal income tax liability for the consolidated return year for each member of the group and any successor or transferee of a member (and any subsequent successors and transferees thereof). The identity of that agent is determined under the rules of paragraph (c) of this section.

(2) *Agent for each consolidated return year*. Agency for the group is established for each consolidated return year and is not affected by the status or membership of the group in later years. Thus, subject to the rules of paragraph (c) of this section, the agent will generally remain agent for that consolidated return year regardless of whether one or more subsidiaries later cease to be members of the group, whether the group files a consolidated return for any subsequent year, whether the agent ceases to be the agent or a member of the group in any subsequent year, or whether the group continues pursuant to § 1.1502–75(d) with a new common parent in any subsequent year.

(3) *Communications under this section*. Any designation, notification, objection, request, or other communication made to or by the Commissioner pursuant to paragraphs (c) and (f)(2) of this section must be made in accordance with procedures prescribed by the Commissioner in the Internal Revenue Bulletin (see § 601.601(d)(2)(ii) of this chapter), forms, instructions, or other appropriate guidance.

(b) *Definitions*. The following definitions apply for purposes of this section only—

(1) *Successor*. A *successor* is an individual or entity (including a disregarded entity as defined in paragraph (b)(3) of this section) that is primarily liable, pursuant to applicable law (including, for example, by operation of a state or federal merger statute), for the tax liability of a corporation that was a member of the group but is no longer in existence under applicable law. The determination of tax liability is made without regard to § 1.1502–1(f)(4) or § 1.1502–6(a). (For inclusion of a successor in references to a subsidiary or member, see paragraph (b)(5)(iii) of this section.)

(2) *Entity*. The term *entity* includes any corporation, limited liability company, or partnership formed under any state, federal, or foreign jurisdiction. The term entity includes a disregarded entity (as defined in paragraph (b)(3) of this section). The term entity does not include an entity that has terminated even if it is in a winding up period under the law under which it is organized.

(3) *Disregarded entity*. The term *disregarded entity* includes any of the following types of entities that are disregarded as separate from their owners—

(i) Qualified real estate investment trust subsidiaries (within the meaning of section 856(i)(2));

(ii) Qualified subchapter S subsidiaries (within the meaning of section 1361(b)(3)(B)); and

(iii) Eligible entities with a single owner (within the meaning of § 301.7701–3 of this chapter).

(4) *Default successor*. A successor to the agent is the *default successor* if it is an entity (whether domestic or foreign) that is the sole successor to the agent. A partnership is treated as a sole successor with primary liability notwithstanding that one or more partners may also be primarily liable by virtue of being partners.

(5) *Member or subsidiary*. All references to a member or subsidiary for a consolidated return year include—

(i) Each corporation that was a member of the group during any part of such year (except that any reference to a subsidiary does not include the common parent);

(ii) Each corporation whose income was included in the consolidated return for such year, notwithstanding that the tax liability of such corporation should have been computed on the basis of a separate return, or as a member of another consolidated group, under the provisions of § 1.1502–75; and

(iii) Except as indicated otherwise, a successor of any of the foregoing corporations.

(6) *Completed year*. A *completed year* is a consolidated return year that has ended, or will end at the time of the referenced event.

(7) *Current year*. A *current year* is a consolidated return year that is not a completed year.

(c) *Identity of the agent*—(1) *In general*. Except as otherwise provided in this section, the agent for a current year is the common parent and the agent for a completed year is the common parent at the close of the completed year or its default successor, if any. Except as specifically provided otherwise in this

paragraph (c), any entity that is an agent pursuant to paragraph (c)(3) of this section (agent following group structure change), paragraph (c)(5) of this section (agent designated by agent terminating without default successor), paragraph (c)(6) of this section (agent designated by Commissioner), or paragraph (c)(7) of this section (agent designated by resigning agent) of this section (and any entity that subsequently serves as agent) acts as an agent for and under the same terms and conditions that apply to a common parent. For example, such an agent would generally be able to designate an agent if it terminates without a default successor; however, an entity that became agent pursuant to a designation by the Commissioner under paragraphs (c)(6)(i)(A)(*2*), (*3*), or (*4*) of this section is not permitted to designate an agent if it terminates without a default successor. Other special rules described in this paragraph (c) apply.

(2) *Purported agent.* If any entity files a consolidated return, or takes any other action related to the tax liability for the consolidated return year, purporting to be the agent but is subsequently determined not to have been the agent with respect to the claimed group, that entity is treated, to the extent necessary to avoid prejudice to the Commissioner, as if it were the agent.

(3) *New common parent after a group structure change.* If the group continues in existence after a group structure change (as described in §1.1502–33(f)(1)), the former common parent is the agent until the group structure change, and the new common parent becomes the agent after the group structure change. Following the group structure change, the new common parent is the agent with respect to the entire current year (including the period before the group structure change) and the former common parent is no longer the agent for that year. However, actions taken by the former common parent as the agent before the group structure change are not nullified when the new common parent becomes the agent with respect to the entire consolidated return year. Following the group structure change, the new common parent continues as the agent for succeeding years subject to the rules of this section.

(4) *Notification by default successor*—(i) *In general.* Failure to provide notice to the Commissioner pursuant to this paragraph (c)(4)(i) does not invalidate an entity's status as the default successor. However, until the Commissioner receives notification in writing that an entity is the default successor—

(A) Any notice of deficiency or other communication mailed to the predecessor agent, even if no longer in existence, is considered as having been properly mailed to the agent; and

(B) The Commissioner is not required to act on any communication (including, for example, a claim for refund) submitted on behalf of the group by any person (including the default successor) other than the predecessor agent.

(ii) *Conversions and continuances.* For purposes of the notice requirements under paragraph (c)(4)(i) of this section, any entity that results from the agent's conversion or continuance by operation of state law and that qualifies as a default successor under paragraph (b)(4) of this section is treated as a default successor for purposes of the notice provisions of paragraph (c)(4)(i) of this section, even if applicable state or local law may treat the converted or continued entity as not ceasing to exist.

(5) *Designation by terminating agent*—(i) *In general.* Prior to the termination of its existence without a default successor, an agent may designate an entity described in paragraph (c)(5)(ii) of this section to act as agent for any completed year. This designation is effective upon the termination of the designating agent's existence. However, this paragraph (c)(5) does not apply to, and no designation can be made by, an agent that was designated by the Commissioner under paragraphs (c)(6)(i)(A)(*2*), (*3*), or (*4*) of this section, or any successor of such an agent; in such a case, the terminating agent should request that the Commissioner designate an agent pursuant to paragraph (c)(6)(i)(B) of this section.

(ii) *Permissible agents*—(A) The terminating agent may designate as agent a member of the group during any part of

the completed year, or an entity (whether domestic or foreign) that is a successor of such a member, including an entity that will become a successor at the time the agent's existence terminates.

(B) The terminating agent may not designate as agent any entity that was previously replaced as agent by the Commissioner pursuant to paragraphs (c)(6)(i)(A)(*2*), (*3*), or (*4*) of this section, or any successor of such an agent. However, the terminating agent may submit a request pursuant to paragraph (c)(6)(i)(B) of this section that the Commissioner designate such an entity as agent.

(iii) *Notification of designation*. The terminating agent must notify the Commissioner in writing of its designation of an entity as agent pursuant to paragraph (c)(5)(i) of this section and provide a statement executed by the designated entity acknowledging that it will serve as the agent for each specified completed year for which it is designated as the agent. If the designated entity was not itself a member of the group during any specified year (because it is a successor of a member), the notification must include a statement acknowledging that the designated entity is or will be primarily liable for the tax liability for the specified completed year as a successor of a member.

(iv) *Failure to designate an agent*. If the agent terminates without a default successor, and no agent is designated pursuant to this paragraph (c)(5)—

(A) Any notice of deficiency or other communication mailed to the agent, even if no longer in existence, is considered as having been properly mailed to the agent; and

(B) The Commissioner is not required to act on any communication (including, for example, a claim for refund) submitted on behalf of the group by any person.

(6) *Designation by the Commissioner*—(i) *In general*. The Commissioner has the authority to designate an entity to act as the agent under the circumstances prescribed in this paragraph (c)(6)(i). The designated agent for a completed year must be an entity described in paragraph (c)(5)(ii)(A) of this section when the designation becomes effective. The designated agent for a current year must be a member of the group when the designation becomes effective. If, pursuant to this paragraph (c)(6), the Commissioner replaces the common parent or another entity as the agent, the common parent or other entity, or any successor thereof, may not later act as the agent unless so designated by the Commissioner.

(A) *On Commissioner's own accord*. With or without a request from any member of the group, the Commissioner may designate an entity to act as the agent if—

(*1*) The agent's existence terminates, other than in a group structure change, without there being a default successor and without any designation made under paragraph (c)(5)(i) of this section;

(*2*) An agent previously designated by the Commissioner is no longer a member of the group in the current year and does not have a default successor that is a member of the group;

(*3*) The Commissioner believes that the agent or its default successor exists but such entity has either not timely responded to the Commissioner's notices (sent to the last known address on file for the entity or left at the usual place of business for such entity) or has failed to perform its obligations as agent as prescribed by the Internal Revenue Code (Code) or regulations promulgated thereunder; or

(*4*) The agent is or becomes a foreign entity as a result of any action or transaction (including, for example, a continuance into a foreign jurisdiction or certain inversion transactions subject to section 7874 in which a foreign parent is treated as a domestic corporation).

(B) *Written request from any member*. At the request of any member, in a circumstance not described in paragraph (c)(6)(i)(A) of this section, the Commissioner may, but is not required to, replace an agent previously designated under this paragraph (c)(6).

(ii) *Notification by Commissioner*. The Commissioner will notify the designated entity in writing of the Commissioner's designation of the entity as agent pursuant to paragraph (c)(6)(i) of this section, and the designation will

be effective as prescribed by the Commissioner. The designated entity should give notice of the designation by the Commissioner pursuant to paragraph (c)(6)(i) of this section to each member of the group during any part of the consolidated return year. However, a failure by the designated entity to notify any such member of the group does not invalidate the designation by the Commissioner.

(iii) *Term and effect of designation.* Unless otherwise provided by the Commissioner in the designation, any agent designated by the Commissioner pursuant to paragraph (c)(6)(i) of this section (new agent) is the agent with respect to the entire consolidated return year for which it is designated and successive years, subject to the rules of this section. An agent immediately preceding a new agent (former agent) ceases to be the agent for a particular consolidated return year once the new agent has been designated for that year, but the designation of the new agent does not nullify actions taken on behalf of the group by the former agent while it was agent. If there is more than one new agent designated by the Commissioner for a consolidated return year, the new agent that is designated last in time by the Commissioner is the agent with respect to the entire consolidated return year. A designation pursuant to this paragraph (c)(6) is effective as prescribed by the Commissioner in such designation or the Internal Revenue Bulletin (see § 601.601(d)(2)(ii) of this chapter), forms, instructions, or other appropriate guidance.

(iv) *Request by member of the group where agent previously designated by the Commissioner is no longer a member.* If an agent at any time after it is designated as agent by the Commissioner pursuant to paragraph (c)(6)(i) of this section is no longer a member of the group for any current year, and its default successor, if any, is not a member of the group at that time, a member of the group, including the agent that will cease to be a member, should request, in writing, that the Commissioner designate a member of the group to be the new agent pursuant to paragraph (c)(6)(i)(A)(*2*) of this section. Until such a request is made—

(A) Any notice of deficiency or other communication mailed to the agent, even if no longer a member, is considered as having been properly mailed to the agent; and

(B) The Commissioner is not required to act on any communication (including, for example, a claim for refund) submitted on behalf of the group by any person.

(7) *Agent resigns*—(i) *In general.* The agent may resign for a completed year if—

(A) It provides written notice to the Commissioner that it no longer intends to be the agent for that completed year;

(B) An entity described in paragraph (c)(5)(ii)(A) of this section consents, in writing, to be the agent with respect to that completed year;

(C) Immediately after its resignation takes effect, the resigning agent will not be the agent for the current year; and

(D) The Commissioner does not object to the agent's resignation.

(ii) *Notification by agent that replaces agent that resigns.* If the Commissioner does not object to the agent's resignation, the agent that replaces the agent that resigns should give written notice that it is the new agent to each member of the group for any part of the completed year for which it is designated the agent.

(8) *Transactions under the Code.* Notwithstanding section 338(a)(2), a target corporation for which an election is made under section 338 is not deemed to terminate for purposes of this section.

(d) *Examples of matters subject to agency.* With respect to any consolidated return year for which it is the agent—

(1) The agent makes any election (or similar choice of a permissible option) that is available to a subsidiary in the computation of its separate taxable income, and any change in an election (or similar choice of a permissible option) previously made by or for a subsidiary, including, for example, a request to change a subsidiary's method or period of accounting;

(2) All correspondence concerning the income tax liability for the consolidated return year is carried on directly with the agent;

(3) The agent files for all extensions of time, including extensions of time for payment of tax under section 6164, and any extension so filed is considered as having been filed by each member;

(4) The agent gives waivers, gives bonds, and executes closing agreements, offers in compromise, and all other documents, and any waiver or bond so given, or agreement, offer in compromise, or any other document so executed, is considered as having also been given or executed by each member;

(5) The agent files claims for refund, and any refund is made directly to and in the name of the agent and discharges any liability of the Government to any member with respect to such refund;

(6) The agent takes any action on behalf of a member of the group with respect to a foreign corporation including, for example, elections by, and changes to the method of accounting of, a controlled foreign corporation in accordance with § 1.964–1(c)(3);

(7) Notices of claim disallowance are mailed only to the agent, and the mailing to the agent is considered as a mailing to each member;

(8) Notices of deficiencies are mailed only to the agent (except as provided in paragraph (f)(3) of this section), and the mailing to the agent is considered as a mailing to each member;

(9) Notices of final partnership administrative adjustment under section 6223 with respect to any partnership in which a member of the group is a partner may be mailed to the agent, and, if so, the mailing to the agent is considered as a mailing to each member that is a partner entitled to receive such notice (for other rules regarding partnership proceedings, see paragraph (f)(2)(iii) of this section);

(10) The agent files petitions and conducts proceedings before the United States Tax Court, and any such petition is considered as also having been filed by each member;

(11) Any assessment of tax may be made in the name of the agent, and an assessment naming the agent is considered as an assessment with respect to each member; and

(12) Notice and demand for payment of taxes is given only to the agent, and such notice and demand is considered as a notice and demand to each member.

(e) *Matters reserved to subsidiaries.* Except as provided in this paragraph (e) and paragraph (f)(2) of this section, no subsidiary (unless it is or becomes an agent pursuant to paragraph (c) of this section) has authority to act for or to represent itself in any matter related to the tax liability for the consolidated return year. The following matters, however, are reserved exclusively to each subsidiary—

(1) The making of the consent required by § 1.1502–75(a)(1);

(2) Any action with respect to the subsidiary's liability for a federal tax other than the income tax imposed by chapter 1 of the Code (including, for example, employment taxes under chapters 21 through 25 of the Code, and miscellaneous excise taxes under chapters 31 through 47 of the Code); and

(3) The making of an election to be treated as a Domestic International Sales Corporation under § 1.992–2.

(f) *Dealings with members*—(1) *Identifying members in notice of a lien.* Notwithstanding any other provisions of this section, any notice of a lien, any levy, or any other proceeding to collect the amount of any assessment, after the assessment has been made, must name the entity from which such collection is to be made.

(2) *Direct dealing with a member*—(i) *Several liability.* The Commissioner may, upon issuing to the agent written notice that expressly invokes the authority of this provision, deal directly with any member of the group with respect to its liability under § 1.1502–6 for the consolidated tax of the group, in which event such member has sole authority to act for itself with respect to that liability. However, if the Commissioner believes or has reason to believe that the existence of the agent has terminated without an agent being identified under this section, the Commissioner may, if the Commissioner deems it advisable, deal directly with any member with respect to that member's liability under § 1.1502–6 without issuing notice to any other entity.

(ii) *Information requests.* The Commissioner may, upon issuing to the agent written notice, request information

relevant to the consolidated tax liability from any member of the group. However, if the Commissioner believes or has reason to believe that the existence of the agent has terminated without an agent being identified under this section, the Commissioner may request such information from any member of the group without issuing notice to any other entity.

(iii) *Members as partners in partnerships subject to the provisions of the Code.* Except as otherwise provided in this paragraph (f)(2)(iii), the general rule of paragraph (a)(1) of this section applies so that the agent is the agent for any subsidiary member that for any part of the consolidated return year is a partner in a partnership subject to the provisions of sections 6221 through 6234 of the Code (as originally enacted by the Tax Equity and Fiscal Responsibility Act of 1982 and subsequently amended) and the accompanying regulations (TEFRA partnership). However—

(A) Any subsidiary or any disregarded entity owned by a subsidiary that is designated as tax matters partner of a TEFRA partnership will act in its own name and perform its responsibilities under sections 6221 through 6234 and the accompanying regulations without requiring any action by the agent (but see paragraph (d)(9) of this section regarding the mailing of a final partnership administrative adjustment to the agent); and

(B) The Commissioner may at any time communicate directly with a subsidiary or a disregarded entity owned by a subsidiary that is a partner in a TEFRA partnership, without having to deal with each member separately pursuant to paragraph (f)(2)(i) of this section, whenever the Commissioner determines that such direct communication will facilitate the conduct of an examination, appeal, or settlement with respect to the partnership.

(3) *Copy of notice of deficiency to entity that has ceased to be a member of the group.* A subsidiary that ceases to be a member of the group during or after a consolidated return year may file a written notice of that fact with the Commissioner and request a copy of any notice of deficiency with respect to the tax for a consolidated return year during which it was a member, or a copy of any notice and demand for payment of such deficiency, or both. Such filing does not limit the scope of the agency of the agent provided for in this section. Any failure by the Commissioner to comply with such request does not limit the subsidiary's tax liability under § 1.1502–6.

(g) *Examples.* Unless otherwise indicated, all entities are domestic and have a calendar year taxable year, and each of P, S, S–1, S–2, S–3, T, V, W, W–1, Y, Z, and Z–1 is a corporation. For none of the consolidated return years at issue does the Commissioner exercise the authority under paragraph (f)(2) of this section to deal with any member separately. Any surviving entity in a merger is either a successor as described in paragraph (b)(1) of this section, or a default successor as described in paragraph (b)(4) of this section, as the case may be. Except as otherwise indicated, no agent will be replaced under paragraph (c)(6) of this section or will resign under paragraph (c)(7) of this section, and all communications to and from the Commissioner are made in accordance with procedures prescribed by the Commissioner.

Example 1. Disposition of all group members where the agent remains the agent. (i) *Facts.* As of January 1 of Year 1, P is the common parent and agent for the P consolidated group, consisting of P and its two subsidiaries, S and S–1. P files consolidated returns for the P group in Years 1 and 2. On December 31 of Year 1, P sells all the stock of S–1 to X. On December 31 of Year 2, P distributes all the stock of S to P's shareholders. P files a separate return for Year 3.

(ii) *Analysis.* Although the consolidated group terminates after Year 2 under § 1.1502–75(d)(1) and P is no longer the common parent nor the agent for years after Year 2, P remains the agent for the P group for Years 1 and 2 under paragraph (a)(2) of this section. Accordingly, for as long as P remains in existence, P is the agent for the P group under paragraphs (a)(1) and (2) and (c)(1) of this section for Years 1 and 2.

Example 2. Acquisition of the agent by another group where the agent remains the agent. (i) *Facts.* The facts are the same as in *Example 1*, except on January 1 of Year 3, all of the outstanding stock of P is acquired by Y, which is the common parent and agent of the Y consolidated group. P thereafter joins in the Y group's consolidated return as a member of the Y group.

(ii) *Analysis.* Although P is a member of the Y group in Year 3 and succeeding years, P remains the agent for the P group for Years 1 and 2 under paragraph (a)(2) of this section. Accordingly, for as long as P remains in existence, P is the agent for the P group under paragraphs (a)(1) and (2) and (c)(1) of this section for Years 1 and 2.

Example 3. Reverse triangular merger of the agent where the agent remains the agent. (i) *Facts.* As of January 1 of Year 1, P is the common parent and agent for the P consolidated group consisting of P and its two subsidiaries, S and S–1. P files consolidated returns for the P group in Years 1 and 2. On March 1 of Year 3, W–1, a subsidiary of W, merges into P in a reverse triangular merger qualifying as a reorganization under section 368(a)(1)(A) and (a)(2)(E). P survives the merger with W–1. The transaction constitutes a reverse acquisition under § 1.1502–75(d)(3)(i) because P's shareholders receive more than 50 percent of W's stock in exchange for all of P's stock. The transaction is therefore a group structure change as described in paragraph (c)(3) of this section.

(ii) *Analysis.* Because the transaction constitutes a reverse acquisition that results in a group structure change, the P group is treated as remaining in existence with W as its common parent and agent. Under paragraphs (a)(1) and (2) and (c)(1) of this section, P remains the agent for the P group for Years 1 and 2 for as long as P remains in existence, even though the P group continues with W as its new common parent pursuant to § 1.1502–75(d)(3)(i). Until the merger of W–1 and P on March 1 of Year 3, P is the agent for the P group for Year 3. From the time of that merger, W, as common parent of the P group, becomes the agent for the P group with respect to all of Year 3 (including the period through March 1) and succeeding consolidated return years. The actions taken by P before the merger as agent for the P group for Year 3 are not nullified by the fact that W becomes the agent for all of Year 3.

Example 4. Reverse triangular merger of the agent—subsequent distribution of agent where the agent remains the agent. (i) *Facts.* The facts are the same as in *Example 3,* except that on April 1 of Year 4, in a transaction unrelated to the March 1, Year 3 reverse acquisition, P distributes the stock of its subsidiaries S and S–1 to W, and W then distributes the stock of P to the W shareholders.

(ii) *Analysis.* Although P is no longer a member of the P group after the Year 4 distribution, P remains the agent for the P group under paragraphs (a)(1) and (2) and (c)(1) of this section for Years 1 and 2 for as long as P remains in existence.

Example 5. Agent Resigns. (i) *Facts.* The facts are the same as in *Example 4,* except that on August 1 of Year 4, P provides written notice to the Commissioner that it resigns as the agent for Years 1 and 2. Included with the written notice is a statement executed by either S or S–1 consenting to be the agent for the P group for Years 1 and 2.

(ii) *Analysis.* Pursuant to paragraph (c)(7) of this section, because P is not the agent in Year 4, the current year, it will not be the agent immediately after its resignation takes effect. Accordingly, if the Commissioner does not object to P's resignation, P may resign with respect to Years 1 and 2, both of which are completed years, and either S or S–1, each an entity described in paragraph (c)(5)(ii)(A) of this section, can be the agent for the P group for Years 1 and 2 if it consents in writing. W cannot be the agent for the P group for Years 1 and 2 because it is not an entity described in paragraph (c)(5)(ii)(A) of this section with respect to the P group for Years 1 and 2.

Example 6. Qualified stock purchase and section 338 election where the agent remains the agent. (i) *Facts.* As of January 1 of Year 1, P is the common parent and agent for the P consolidated group consisting of P and its two subsidiaries, S and S–1. P files consolidated returns for the P group in Years 1 and 2. On March 31 of Year 2, V purchases the stock of P in a qualified stock purchase (within the meaning of section 338(d)(3)), and V makes a timely election pursuant to section 338(g) with respect to P.

(ii) *Analysis.* Although section 338(a)(2) provides that P is treated as a new corporation as of the beginning of the day after the acquisition date for purposes of subtitle A, paragraph (c)(8) of this section provides that P's existence is not deemed to terminate for purposes of this section notwithstanding the general rule of section 338(a)(2). Accordingly, new P is the agent for the P group for Year 1 and the period ending March 31 of Year 2 regardless of the election under section 338(g).

Example 7. Change in the agent's federal income tax classification to a partnership and the resulting partnership continues as the agent. (i) *Facts.* P, a State M limited liability partnership with two partners that is formed on January 1 of Year 1, elects pursuant to § 301.7701–3(c) of this chapter to be an association taxable as a corporation for federal income tax purposes effective on the date of formation. P is the common parent and agent for the P consolidated group consisting of P and its two subsidiaries, S and S–1. P files consolidated returns for the P group in Years 1 through 6. On January 1 of Year 7, P elects pursuant to § 301.7701–3(c) of this chapter to be treated as a partnership. P remains in existence under applicable law.

(ii) *Analysis.* The P group terminates and P is no longer the common parent of a consolidated group after its election to be treated as a partnership for federal income tax purposes. Because P remains in existence under applicable law, P is the agent for the P group under paragraphs (a)(1) and (2) and (c)(1) of

this section for Years 1 through 6. If P merged into a foreign partnership instead of converting to a partnership, the foreign partnership would be P's default successor and agent for the P group for Years 1 through 6. See paragraphs (b)(4) and (c)(1) of this section.

Example 8. Forward triangular merger of agent—successor as default successor. (i) *Facts.* As of January 1 of Year 1, P is the common parent and agent for the P consolidated group consisting of P and its two subsidiaries, S and S–1. P files a consolidated return for the P group for Year 1. On January 1 of Year 3, P merges with and into Z–1, a subsidiary of Z, in a forward triangular merger qualifying as a reorganization under section 368(a)(1)(A) and (a)(2)(D). The transaction constitutes a reverse acquisition under §1.1502–75(d)(3)(i) resulting in a group structure change as described in paragraph (c)(3) of this section because P's shareholders receive more than 50 percent of Z's stock in exchange for all of P's stock. Z–1, the corporation that survives the merger and the successor of P, is the default successor for the P group for Years 1 and 2.

(ii) *Analysis.* Although Z is the new common parent for the P group (which continues pursuant to §1.1502–75(d)(3)(i)) for consolidated return years after the merger, and, as a consequence, Z is the new agent as a result of this group structure change, P may not designate an agent for Years 1 or 2 because Z–1 is P's default successor and the agent for the P group for Years 1 and 2. Z–1 must file the P group's consolidated return for Year 2. See paragraphs (b)(4) and (c)(1) of this section.

Example 9. Merger of the agent into a disregarded entity in exchange for stock of owner in a transaction qualifying as a reorganization under the Code where successor is the default successor. (i) *Facts.* As of January 1 of Year 1, P is the common parent and agent for the P consolidated group consisting of P and its two subsidiaries, S and S–1. P files a consolidated return for the P group in Year 1. On January 1 of Year 2, the shareholders of P form Y, a State M corporation. On the same date, Y forms Y–1, a State M limited liability company that is a disregarded entity (as defined in paragraph (b)(3) of this section) for federal income tax purposes, and P merges into Y–1 under State M law. In the merger, the P shareholders receive all of the Y stock. Y (through Y–1) is treated as acquiring the assets of P in a transaction qualifying as a reorganization of P into Y under section 368(a)(1)(F), and the P group continues under §1.1502–75(d)(2) with Y as the common parent and, as a consequence, the transaction is treated as a group structure change as described in paragraph (c)(3) with Y as the P group's agent for Year 2. In Year 4, the Commissioner seeks to extend the period of limitations on assessment with respect to Year 1 of the P group. In Year 5, the Commissioner seeks to extend the period of limitations on assessment with respect to Year 2 of the Y group (formerly the P group).

(ii) *Analysis.* (A) *Year 1 extension.* As a result of the January 1, Year 2 merger, Y–1 is the default successor of P, and the agent for the P group for Year 1. See paragraphs (b)(4) and (c)(1) of this section. Therefore, Y–1 is the only party that can sign the extension with respect to the P group for Year 1.

(B) *Year 2 extension.* Because the January 1, Year 2 merger qualified as a reorganization under section 368(a)(1)(F), the P group remains in existence with Y as the common parent. Therefore, Y, the common parent of the P group after the merger, is the P group's agent for all of Year 2 (see paragraph (c)(3) of this section) and is the only party that can sign the extension with respect to the P group for that year and in succeeding years. See paragraphs (a)(1) and (2) and (c)(1) of this section.

Example 10. Designation of agent where there is no default successor. (i) *Facts.* P is incorporated under the laws of State X. Fifty percent of its stock is owned at all times by A, an individual, and 50 percent by BCD, a partnership. On January 1 of Year 1, P forms two subsidiaries, S and T, and becomes the common parent of the P group. P files consolidated returns for the P group beginning in Year 1 and is the agent for the P consolidated group beginning on January 1 of Year 1. On November 30 of Year 3, P dissolves under X law. Under X law, A and BCD are primarily liable for the federal income tax liability of dissolved corporation P. State X law allows the officers of a dissolved corporation to perform certain actions incident to the winding up of its affairs after its dissolution, including the filing of tax returns.

(ii) *Analysis.* Upon P's dissolution, there is no default successor to P, pursuant to paragraph (b)(4) of this section, because there are two successors. Prior to its dissolution on November 30 of Year 3, pursuant to paragraph (c)(5)(i) of this section, P may designate an agent for the P group for Years 1 and 2 and the short taxable year ending on November 30 of Year 3, to be effective upon P's dissolution. P may designate S or T, pursuant to paragraph (c)(5)(ii)(A) of this section (because they are members of the former group), or BCD (because it is an entity that is a successor to P pursuant to paragraph (b)(1) of this section). P cannot designate A pursuant to paragraph (c)(5)(ii) of this section, because A is not an entity. Under paragraph (b)(2) of this section, the officers of P cannot designate an agent for the P group after P dissolves on November 30 of Year 3, notwithstanding the winding up provisions of State X law. Accordingly, P should designate an agent prior to its dissolution to ensure that there is an agent authorized to file the short Year 3 consolidated return. If P

does not designate an agent prior to dissolution under paragraph (c)(5)(i) of this section, the Commissioner may designate an agent under paragraph (c)(6)(i)(A)(*1*) of this section from among S, T, or BCD, upon their request or otherwise. If any of S, T, A, or BCD realizes that P has dissolved without designating an agent, it should request, in writing, a designation of an agent by the Commissioner as soon as possible.

Example 11. Commissioner designates a new agent. (i) *Agent fails to fulfill its obligations.* (A) *Facts.* P is the common parent and agent for the P consolidated group consisting of P and its two subsidiaries, S–1 and S–2, each a State Y corporation. P files a consolidated return for the P group in Year 1. In Year 2, S–3, also a State Y corporation, joins the P group. The P group continues as a consolidated group in Years 2, 3, and 4. As of Year 4, P has failed to file the P group consolidated returns for Years 2 and 3.

(B) *Analysis.* (*1*) *Scope of designation.* Because P failed to perform its obligations as agent as prescribed by federal tax law, the Commissioner may, under the authority of paragraph (c)(6)(i)(A)(*3*) of this section, on his own accord, with or without a written request from a member, designate another entity described in paragraph (c)(6)(i) of this section to act as the agent for not just Years 2 and 3, but any of Years 1 through 4.

(*2*) *Year 1 designation.* The Commissioner may designate either S–1 or S–2, both of which are entities described in paragraphs (c)(6)(i) and (c)(5)(ii)(A) of this section, to act as the agent for the P group for Year 1. Because S–3 was not a member of the group in Year 1, it is not an entity described in paragraphs (c)(6)(i) and (c)(5)(ii)(A) of this section for Year 1 and therefore cannot be the agent for Year 1. Unless otherwise provided in the designation, the designation of either S–1 or S–2 will also be effective for Years 2, 3, and 4 and all succeeding consolidated return years of the group.

(*3*) *Year 2 designation.* The Commissioner may designate either S–1, S–2, or S–3, all of which are entities described in paragraph (c)(5)(ii)(A) of this section, to act as the agent for the P group for Year 2. Unless otherwise provided in the designation, the designation of either S–1, S–2, or S–3 will also be effective for Years 3 and 4 and all succeeding consolidated return years of the group.

(*4*) *Year 3 designation.* The Commissioner may designate any of S–1, S–2, or S–3 as the agent for Year 3. Unless otherwise provided in the designation, the designation of either S–1, S–2, or S–3 will also be effective for Year 4 and all succeeding consolidated return years of the group.

(*5*) *Year 4 designation.* The Commissioner may designate any of S–1, S–2, or S–3 as the agent for Year 4. Unless otherwise provided in the designation, the designation of either S–1, S–2, or S–3 will also be effective for all succeeding consolidated return years of the group.

(ii) *Member requests replacement of designated agent.* (A) *Facts.* The facts are the same as in paragraph (i)(A) of this *Example 11,* except that in Year 4 the Commissioner designates S–1 as agent for Years 1 and succeeding years to replace P for P's failure to fulfill its obligations. After receiving notification that S–1 has been designated, S–3 submits a request in Year 4, pursuant to paragraph (c)(6)(i)(B) of this section, that the Commissioner designate S–2 as the agent because S–1 does not have ready access to the group's books and records, which are located in another state and are in the possession of S–2.

(B) *Analysis.* In light of S–3's request, the Commissioner may, under the authority of paragraph (c)(6)(i)(B) of this section, designate either S–2 (for all or any years) or S–3 (for any year or years other than Year 1) as agent in lieu of the previously designated agent, S–1. However, notwithstanding S–3's request, the Commissioner is not required to replace S–1 as agent for any of the consolidated return years for which S–1 was designated.

Example 12. Designated agent ceases to be a member of the group. (i) *Facts.* The facts are the same as in paragraph (ii)(A) of *Example 11,* except that in Year 4 no member requests that the Commissioner replace S–1, which accordingly continues to be the agent for the P group in Year 5 pursuant to paragraph (c)(6)(iii) of this section. On May 2 of Year 5, S–1 converts under State Y law into S–1 LLC, a limited liability company that is an entity that is treated as a disregarded entity (as defined in paragraph (b)(3) of this section) and, as a consequence, is no longer a member of the P group after the conversion.

(ii) *Analysis for completed years.* S–1 LLC, the disregarded entity resulting from the conversion, becomes S–1's default successor. As such, S–1 LLC is the agent for Years 1–4.

(iii) *Analysis for current and succeeding years.* S–1 is an agent designated by the Commissioner pursuant to paragraph (c)(6)(i)(A)(*3*) of this section. Because S–1 is no longer a member of the P group after May 2 of Year 5, S–1 is the agent for the P group for Year 5 only while it remains a member (see paragraphs (c)(6)(i) and (iii) of this section). According to paragraph (c)(6)(i) of this section, although S–1 LLC is S–1's default successor, it is not a member of the group for the current year and therefore cannot be its agent. Furthermore, S–1 cannot designate an agent for Year 5 under paragraph (c)(5)(i) of this section because that paragraph pertains only to designations for completed years for which there is no default successor. In addition, S–1 cannot designate an agent for Year 5 under paragraph (c)(5)(i) of this section because S–1 was previously designated by the

Commissioner under paragraph (c)(6)(i)(A)(*3*) of this section.

(iv) *Member's notice to Commissioner for Commissioner to designate a member of the group for a current year.* A member of the group in Year 5 should request that the Commissioner designate, pursuant to paragraphs (c)(6)(i)(A)(*2*) and (c)(6)(iv) of this section, another member of the P group to be the agent of the group for Year 5. The Commissioner may then, pursuant to paragraph (c)(6)(i)(A)(*2*) of this section, designate either S–2, S–3, or P to be the agent for the P group and, once so designated, that member will be, effective on May 3 of Year 5, the agent for all of Year 5 and for succeeding years (subject to the rules of this section) pursuant to paragraph (c)(6)(iii) of this section. No actions taken by S–1 on behalf of the P group through May 2, Year 5, are nullified by the Commissioner's designation of another agent even though the agent so designated will be the agent for all of Year 5.

Example 13. Fraudulent conveyance of assets. (i) *Facts.* As of January 1 of Year 1, P is the common parent and agent for the P consolidated group consisting of P and its two subsidiaries, S and S–1. On March 15 of Year 2, P files a consolidated return that includes the income of S and S–1 for Year 1. On December 1 of Year 2, S–1 transfers assets having a fair market value of $100x to U in exchange for $10x. This transfer of assets for less than fair market value constitutes a fraudulent conveyance under applicable state law. On March 1 of Year 5, P executes a waiver extending to December 31 of Year 6 the period of limitations on assessment with respect to the P group's Year 1 consolidated return. On February 1 of Year 6, the Commissioner issues a notice of deficiency to P asserting a deficiency of $30x for the P group's Year 1 consolidated tax liability. P does not file a petition for redetermination in the Tax Court, and the Commissioner makes a timely assessment against the P group. P, S, and S–1 are all insolvent and are unable to pay the deficiency. On February 1 of Year 8, the Commissioner sends a notice of transferee liability to U, which does not file a petition in the Tax Court. On August 1 of Year 8, the Commissioner assesses the amount of the P group's deficiency against U. Under section 6901(c), the Commissioner may assess U's transferee liability within one year after the expiration of the period of limitations against the transferor, S–1. By operation of section 6213(a) and 6503(a), the issuance of the notice of deficiency to P and the expiration of the 90-day period for filing a petition in the Tax Court have the effect of further extending by 150 days the P group's limitations period on assessment from the previously extended date of December 31 of Year 6 to May 30 of Year 7.

(ii) *Analysis.* Pursuant to paragraph (a)(1) of this section, the waiver executed by P on March 1 of Year 5 to extend the period of limitations on assessment to December 31 of Year 6 and the further extension of the P group's limitations period to May 30 of Year 7 (by operation of sections 6213(a) and 6503(a)) have the derivative effect of extending the period of limitations on assessment of U's transferee liability to May 30 of Year 8. By operation of section 6901(f), the issuance of the notice of transferee liability to U and the expiration of the 90-day period for filing a petition in the Tax Court have the effect of further extending the limitations period on assessment of U's liability as a transferee by 150 days, from May 30 of Year 8 to October 27 of Year 8. Accordingly, the Commissioner may send a notice of transferee liability to U at any time on or before May 30 of Year 8 and assess the unpaid liability against U at any time on or before October 27 of Year 8. The result would be the same even if S–1 ceased to exist before March 1 of Year 5, the date P executed the waiver.

Example 14. Consent to extend the statute of limitations for a partnership where a member of the consolidated group is a partner of such partnership subject to the provisions of the Code and the tax matters partner is not a member of the group. (i) *Facts.* P is the common parent and agent for the P consolidated group consisting of P and its two subsidiaries, S and S–1. The P group has a November 30 fiscal year end and P files consolidated returns for the P group for the years ending November 30, Year 1 and November 30, Year 2. S–1 is a partner in the PRS partnership, which is subject to the provisions of sections 6221 through 6234. PRS has a calendar year end and A, an individual, is the tax matters partner of the PRS partnership. PRS files a partnership return for the year ending December 31, Year 1. On January 10, Year 5, A, as the tax matters partner for the PRS partnership, executes a consent to extend the period for assessment of partnership items of PRS for all partners, and the Commissioner co-executes the consent on the same day for the year ending December 31, Year 1.

(ii) *Analysis.* A's consent to extend the statute of limitations for the partnership items of PRS partnership for the year ending December 31, Year 1, extends the statute of limitations with respect to the partnership items for all members of the P group, including P, S, and S–1 for the consolidated return year ending November 30, Year 2. This is because S–1 is a partner in the PRS partnership for which A, the tax matters partner for the PRS partnership, consents, pursuant to section 6229(b)(1)(B), to extend the statute of limitations for the year ending December 31, Year 1. However, under paragraph (f)(2)(iii) of this section, such agreement with respect to the statute of limitations for the PRS partnership for the year ending December 31, Year 1 does not obviate the need to obtain a

consent from P, the agent for the P consolidated group, to extend the statute of limitations for the P consolidated group for the P group's consolidated return years ending November 30, Year 1 and November 30, Year 2 regarding any items other than partnership items or affected items of the PRS partnership.

Example 15. Contacting subsidiary member in order to facilitate the conduct of an examination, appeal, or settlement where a member of the consolidated group is a partner of a partnership subject to the provisions of the Code. (i) *Facts.* P is the common parent and agent for the P consolidated group consisting of P and its two subsidiaries, S and S–1. The P group has a November 30 fiscal year end, and P files consolidated returns for the P group for the years ending November 30, Year 1 and November 30, Year 2. S–1 is a partner in the PRS partnership, which is subject to the provisions of sections 6221 through 6234. PRS has a calendar year end and A, an individual, is the tax matters partner of the PRS partnership. PRS files a partnership return for the year ending December 31, Year 1. The Commissioner, on January 10, Year 4, in the course of an examination of the PRS partnership for the year ending December 31, Year 1, seeks to obtain information in the course of that examination to resolve the audit.

(ii) *Analysis.* Because the direct contact with a subsidiary member of a consolidated group that is a partner in a partnership subject to the provisions under sections 6221 through 6234 may facilitate the conduct of an examination, appeal, or settlement, the Commissioner, under paragraph (f)(2)(iii) of this section, may communicate directly with either S–1, P, or A regarding the PRS partnership without breaking agency pursuant to paragraph (f)(2)(i) of this section. However, if the Commissioner were instead seeking to execute a settlement agreement with respect to S–1 as a partner with respect to its liability as a partner in PRS partnership, P would need to execute such settlement agreement for all members of the group including the partner subsidiary.

(h) *Cross-reference.* For further rules applicable to groups that include insolvent financial institutions, see § 301.6402–7 of this chapter.

(i) [Reserved]

(j) *Effective/applicability date*—(1) *In general.* The rules of this section apply to consolidated return years beginning on or after April 1, 2015. For prior years beginning before June 28, 2002, see § 1.1502–77A. For prior years beginning on or after June 28, 2002, and before April 1, 2015, see § 1.1502–77B.

(2) *Application of this section to prior years.* Notwithstanding paragraph (j)(1) of this section, an agent may apply the rules of paragraph (c)(7) of this section to resign as agent for a completed year that began before April 1, 2015.

[T.D. 9715, 80 FR 17318, Apr. 1, 2015]

§ 1.1502–78 Tentative carryback adjustments.

(a) *General rule.* If a group has a consolidated net operating loss, a consolidated net capital loss, or a consolidated unused business credit for any taxable year, then any application under section 6411 for a tentative carryback adjustment of the taxes for a consolidated return year or years preceding such year shall be made by the common parent corporation for the carryback year (or the agent determined under § 1.1502–77(c) or § 1.1502–77B(d) for the carryback year) to the extent such loss or unused business credit is not apportioned to a corporation for a separate return year pursuant to § 1.1502–21(b), 1.1502–22(b), or 1.1502–79(c). In the case of the portion of a consolidated net operating loss or consolidated net capital loss or consolidated unused business credit to which the preceding sentence does not apply and that is to be carried back to a corporation that was not a member of a consolidated group in the carryback year, the corporation to which such loss or credit is attributable shall make any application under section 6411. In the case of a net capital loss or net operating loss or unused business credit arising in a separate return year that may be carried back to a consolidated return year, after taking into account the application of § 1.1502–21(b)(3)(ii)(B) with respect to any net operating loss arising in another consolidated group, the common parent for the carryback year (or the agent determined under § 1.1502–77(c) or § 1.1502–77B(d) for the carryback year) shall make any application under section 6411.

(b) *Special rules*—(1) *Payment of refund.* Any refund allowable under an application referred to in paragraph (a) of this section shall be made directly to and in the name of the corporation filing the application, except that in all cases where a loss is deducted from

the consolidated taxable income or a credit is allowed in computing the consolidated tax liability for a consolidated return year, any refund shall be made directly to and in the name of the common parent corporation for the carryback year (or the agent determined under §1.1502–77(c) or §1.1502–77B(d) for the carryback year). The payment of any such refund shall discharge any liability of the Government with respect to such refund.

(2) *Several liability*. If a group filed a consolidated return for a taxable year for which there was an adjustment by reason of an application under section 6411, and if a deficiency is assessed against such group under section 6213(b)(3), then each member of such group shall be severally liable for such deficiency including any interest or penalty assessed in connection with such deficiency.

(3) *Groups that include insolvent financial institutions*. For further rules applicable to groups that include insolvent financial institutions, see §301.6402–7 of this chapter.

(c) *Examples*. The provisions of paragraphs (a) and (b) of this section may be illustrated by the following examples:

Example 1. Corporations P, S, and S–1 filed a consolidated return for the calendar year 2003. P, S, and S–1 also filed a consolidated return for the calendar year 2006. The group incurred a consolidated net operating loss in 2006 attributable to S–1 which may be carried back to 2003 as a consolidated net operating loss carryback. If a tentative carryback adjustment is desired, P, the common parent for the carryback year, must file an application under section 6411 and any refund will be made to P.

Example 2. Assume the same facts as in example (1) except that P, S, and S–1 filed separate returns for the calendar year 2006, even though they were members of the same group for such year. P incurred a net operating loss in 1969 which may be carried back to 2003. If a tentative carryback adjustment is desired, P must file an application under section 6411 and any refund from such application will be made to P.

Example 3. Corporations X, Y, and Z filed a consolidated return for the calendar year 2003. Z ceased to be a member of the group in 2004. Z filed a separate return for 2005 while X and Y filed a consolidated return for such year. The group incurred a consolidated net operating loss in 2005 attributable to Y, which may be carried back to 2003. Z also incurred a net operating loss for 2005 which may be carried back to 2003. If a tentative carryback adjustment is claimed with respect to the consolidated net operating loss, X, the common parent, must file an application under section 6411. If a tentative carryback adjustment is desired with respect to Z's loss, X must file an application. Any refunds attributable to either application will be made to X. If an assessment is made under section 6213(b)(3) to recover an excessive tentative allowance made with respect to calendar year 2003, X, Y, and Z are severally liable for such assessment.

Example 4. Corporations L and M filed a consolidated return for the calendar year 2003. Corporation N filed a separate return for such year. Later, N became a member of the group and filed a consolidated return with the group for the calendar year 2005. The group incurred a consolidated net operating loss in 2005 attributable to N which may be carried back to N's separate return for 2003. If a tentative carryback adjustment is desired, N must file an application under section 6411 and any refund will be made directly to N.

(d) *Adjustments of overpayments of estimated income tax*. If a group paid its estimated income tax on a consolidated basis, then any application under section 6425 for an adjustment of overpayment of estimated income tax shall be made by the common parent corporation. If the members of a group paid estimated income taxes on a separate basis, then any application under section 6425 shall be made by the member of the group which claims an overpayment on a separate basis. Any refund allowable under an application under section 6425 shall be made directly to and in the name of the corporation filing the application.

(e) *Time for filing application*—(1) *General rule*. The provisions of section 6411(a) apply to the filing of an application for a tentative carryback adjustment by a consolidated group.

(2) *Special rule for new members*—(i) *New member*. A new member is a corporation that, in the preceding taxable year, did not qualify as a member, as defined in §1.1502–1(b), of the consolidated group that it now joins.

(ii) *End of taxable year*. Solely for the purpose of complying with the twelve-month requirement for making an application for a tentative carryback adjustment under section 6411(a), the separate return year of a qualified new member shall be treated as ending on

the same date as the end of the current taxable year of the consolidated group that the qualified new member joins.

(iii) *Qualified new member*. A new member of a consolidated group qualifies for purposes of the provisions of this paragraph (e)(2) if, immediately prior to becoming a new member, either—

(A) It was the common parent of a consolidated group; or

(B) It was not required to join in the filing of a consolidated return.

(iv) *Examples*. The provisions of this paragraph (e)(2) may be illustrated by the following examples:

Example 1. Individual A owns 100 percent of the stock of X, a corporation that is not a member of a consolidated group and files separate tax returns on a calendar year basis. On January 31 of year 1, X becomes a member of the Y consolidated group, which also files returns on a calendar year basis. X is a qualified new member as defined in paragraph (e)(2)(iii)(B) of this section because, immediately prior to becoming a new member of the Y consolidated group, X was not required to join in the filing of a consolidated return. As a result of its becoming a new member of Group Y, X's separate return for the short taxable year (January 1 of year 1 through January 31 of year 1) is due September 15 of year 2 (with extensions). See §1.1502–76(c). Group Y's consolidated return is also due September 15 of year 2 (with extensions). See §1.1502–76(c). Solely for the purpose of complying with the twelve-month requirement for making an application for a tentative carryback adjustment under section 6411(a), X's taxable year for the separate return year is treated as ending on December 31 of year 1. X's application for a tentative carryback adjustment is therefore due on or before December 31 of year 2.

Example 2. Assume the same facts as in *Example 1* except that immediately prior to becoming a new member of Group Y, X was a member of the Z consolidated group. Because X was required to join in the filing of the consolidated return for Group Z, X is not a qualified new member as defined in paragraph (e)(2)(iii) of this section. X's items for the one-month period will be included in the consolidated return for Group Z. Group Z's application for a tentative carryback adjustment, if any, continues to be due within 12 months of the end of its taxable year, which is not affected by X's change in status as a new member of Group Y.

(f) *Effective date*—(1) *In general*. This section applies to taxable years to which a loss or credit may be carried back and for which the due date (without extensions) of the original return is after June 28, 2002, except that the provisions of paragraph (e)(2) apply for applications by new members of consolidated groups for tentative carryback adjustments resulting from net operating losses, net capital losses, or unused business credits arising in separate return years of new members that begin on or after January 1, 2001.

(2) *Prior law*. For taxable years to which a loss or credit may be carried back and for which the due date (without extensions) of the original return is on or before June 28, 2002, *see* §1.1502–78 in effect prior to June 28, 2002, as contained in 26 CFR part 1 revised April 1, 2002.

[T.D. 6894, 31 FR 11794, Sept. 3, 1966, as amended by T.D. 7059, 35 FR 14546, Sept. 17, 1970; T.D. 7246, 38 FR 767, Jan. 4, 1973; T.D. 8387, 56 FR 67489, Dec. 31, 1991; T.D. 8446, 57 FR 53034, Nov. 6, 1992; T.D. 8677, 61 FR 33324, June 27, 1996; T.D. 8823, 64 FR 36100, July 2, 1999; T.D. 8950, 66 FR 33463, June 22, 2001; T.D. 9002, 67 FR 43544, June 28, 2002; 67 FR 77678, Dec. 19, 2002; T.D. 9715, 80 FR 17324, Apr. 1, 2015]

§1.1502–79 Separate return years.

(a) *Carryover and carryback of consolidated net operating losses to separate return years*. For losses arising in consolidated return years beginning before January 1, 1997, see §1.1502–79A(a). For later years, see §1.1502–21(b).

(b) *Carryover and carryback of consolidated net capital loss to separate return years*. For losses arising in consolidated return years beginning before January 1, 1997, see §1.1502–79A(b). For later years, see §1.1502–22(b).

(c) *Carryover and carryback of consolidated unused investment credit to separate return years*—(1) *In general*. If a consolidated unused investment credit can be carried under the principles of section 46(b) and paragraph (b) of §1.1502–3 to a separate return year of a corporation (or could have been so carried if such corporation were in existence) which was a member of the group in the year in which such unused credit arose, then the portion of such consolidated unused credit attributable to such corporation (as determined under subparagraph (2) of this paragraph)

shall be apportioned to such corporation (and any successor to such corporation in a transaction to which section 381(a) applies) under the principles of §1.1502–21(b) (or §§1.1502–79A(a)(1) and (2), as appropriate) and shall be an investment credit carryover or carryback to such separate return year.

(2) *Portion of consolidated unused investment credit attributable to a member*—(i) *Investment credit carryback.* In the case of a consolidated unused credit which is an investment credit carryback, the portion of such consolidated unused credit attributable to a member of the group is an amount equal to such consolidated unused credit multiplied by a fraction, the numerator of which is the credit earned of such member for the consolidated unused credit year, and the denominator of which is the consolidated credit earned for such unused credit year.

(ii) *Investment credit carryover.* In the case of a consolidated unused credit which is an investment credit carryover, the portion of such consolidated unused credit attributable to a member of the group is an amount equal to such consolidated unused credit multiplied by a fraction, the numerator of which is the credit earned with respect to any section 38 property placed in service in the consolidated unused credit year and owned by such member (whether or not placed in service by such member) at the close of the last day as of which the taxable income of such member is included in a consolidated return filed by the group, and the denominator of which is the consolidated credit earned for such unused credit year.

(d) *Carryover and carryback of consolidated unused foreign tax*—(1) *In general.* If a consolidated unused foreign tax can be carried under the principles of section 904(d) and paragraph (e) of §1.1502–4 to a separate return year of a corporation (or could have been so carried if such corporation were in existence) which was a member of the group in the year in which such unused foreign tax arose, then the portion of such consolidated unused foreign tax attributable to such corporation (as determined under subparagraph (2) of this paragraph) shall be apportioned to such corporation (and any successor to such corporation in a transaction to which section 381(a) applies) under the principles of §1.1502–21(b) (or §§1.1502–79A(a)(1) and (2), as appropriate) and shall be deemed paid or accrued in such separate return year to the extent provided in section 904(d).

(2) *Portion of consolidated unused foreign tax attributable to a member.* The portion of a consolidated unused foreign tax for any year attributable to a member of a group is an amount equal to such consolidated unused foreign tax multipled by a fraction, the numerator of which is the foreign taxes paid or accrued for such year (including those taxes deemed paid or accrued, other than by reason of section 904(d)) to each foreign country or possession (or to all foreign countries or possessions if the overall limitation is effective) by such member, and the denominator of which is the aggregate of all such taxes paid or accrued for such year (including those taxes deemed paid or accrued, other than by reason of section 904(d)) to each such foreign country or possession (or to all foreign countries or possessions if the overall limitation is effective) by all the members of the group.

(e) *Carryover of consolidated excess charitable contributions to separate return years*—(1) *In general.* If the consolidated excess charitable contributions for any taxable year can be carried under the principles of section 170(b)(2) and paragraph (b) of §1.1502–24 to a separate return year of a corporation (or could have been so carried if such corporation were in existence) which was a member of the group in the year in which such excess contributions arose, then the portion of such consolidated excess charitable contributions attributable to such corporation (as determined under subparagraph (2) of this paragraph) shall be apportioned to such corporation (and any successor to such corporation in a transaction to which section 381(a) applies) under the principles of §1.1502–21(b) (or §§1.1502–79A(a)(1) and (2), as appropriate) and shall be a charitable contribution carryover to such separate return year.

(2) *Portion of consolidated excess charitable contributions attributable to a member*. The portion of the consolidated excess charitable contributions attributable to a member of a group is an amount equal to such consolidated excess contributions multiplied by a fraction, the numerator of which is the charitable contributions paid by such member for the taxable year, and the denominator of which is the aggregate of all such charitable contributions paid for such year by all the members of the group.

[T.D. 6894, 31 FR 11794, Sept. 8, 1966, as amended by T.D. 7728, 45 FR 72650, Nov. 3, 1980; T.D. 8294, 55 FR 9438, Mar. 14, 1990; T.D. 8319, 55 FR 49038, Nov. 26, 1990; T.D. 8364, 56 FR 47402, Sept. 19, 1991; T.D. 8597, 60 FR 36710, July 18, 1995; T.D. 8677, 61 FR 33324, 33325, 33334, June 27, 1996; T.D. 8823, 64 FR 36100, July 2, 1999]

§ 1.1502–80 Applicability of other provisions of law.

(a) *In general*—(1) *Application of other provisions*. The Internal Revenue Code (Code), or other law, shall be applicable to the group to the extent the regulations do not exclude its application. To the extent not excluded, other rules operate in addition to, and may be modified by, these regulations. Thus, for example, in a transaction to which section 381(a) applies, the acquiring corporation will succeed to the tax attributes described in section 381(c). Furthermore, sections 269 and 482 apply for any consolidated return year. However, in a recognition transaction otherwise subject to section 1001, for example, the rules of section 1001 continue to apply, but may be modified by the intercompany transaction regulations under § 1.1502–13.

(2) *No duplicative adjustments*. Nothing in these regulations shall be interpreted or applied to require an adjustment, inclusion, or other item to the extent it would have the effect of duplicating any other adjustment, inclusion, or other item required under the Code or other rule of law, including other provisions of these regulations.

(3) *Application of single-entity principles*. If two or more adjustments, inclusions, or other items are subject to paragraph (a)(2) of this section, the determination of which adjustment, inclusion, or other item is treated as applied or taken into account is made by taking into account the purposes of the provisions and applying single-entity principles as appropriate.

(4) *Effective/applicability dates*. This paragraph (a) is applicable with respect to transactions and determinations on or after September 17, 2008.

(b) *Non-applicability of section 304*. Section 304 does not apply to any acquisition of stock of a corporation in an intercompany transaction or to any intercompany item from such transaction occurring on or after July 24, 1991.

(c) *Deferral of section 165*—(1) *General rule*. Subsidiary stock is not treated as worthless under section 165 until immediately before the earlier of the time—

(i) The stock is worthless within the meaning of § 1.1502–19(c)(1)(iii); or

(ii) The subsidiary for any reason ceases to be a member of the group.

(2) *Cross reference*. See § 1.1502–36 for additional rules relating to worthlessness of subsidiary stock on or after September 17, 2008.

(3) *Effective/applicability date*. This paragraph (c) applies to taxable years for which the original consolidated Federal income tax return is due (without extensions) after July 18, 2007. However, taxpayers may apply this paragraph (c) to taxable years beginning on or after January 1, 1995.

(d) *Non-applicability of section 357(c)*—(1) *In general*. Section 357(c) does not apply to any transaction to which § 1.1502–13, § 1.1502–13T, § 1.1502–14, or § 1.1502–14T applies, if it occurs in a consolidated return year beginning on or after January 1, 1995. For example, P, S, and T are members of a consolidated group, P owns all of the stock of S and T with bases of $30 and $20, respectively, S has a $30 basis in its assets and $40 of liabilities, and S merges into T in a transaction described in section 368(a)(1)(A) (and in section 368(a)(1)(D)); section 357(c) does not apply to the merger, P's basis in T's stock increases to $50 ($30 plus $20), and T succeeds to S's $30 basis in the assets transferred subject to the $40 liability. Similarly, if S instead transferred its assets and liabilities to a newly formed subsidiary in a transaction to which section 351 applies, section 357(c) does

not apply and S's basis in the subsidiary's stock is a $10 excess loss account. This paragraph (d) does not apply to a transaction if the transferor or transferee becomes a nonmember as part of the same plan or arrangement. The transferor (or transferee) is treated as becoming a nonmember once it is no longer a member of a consolidated group that includes the transferee (or transferor). For purposes of this paragraph (d), any reference to a transferor or transferee includes, as the context may require, a reference to a successor or predecessor.

(2) *Prior period transactions*. If, in a tax year beginning before January 1, 1995, a member's stock with an excess loss account is transferred in a transaction to which §1.1502–13, §1.1502–13T, §1.1502–14, or §1.1502–14T applies, paragraph (d)(1) of this section applies to the stock transfer to the extent that the income, gain, deduction, or loss (if any) is not taken into account in a tax year beginning before January 1, 1995. For example, if P, S, and T, are members of a consolidated group, T's stock has an excess loss account, and P transfers the T stock to S in 1993 in a transaction to which section 351 and §1.1502–13 apply, section 357(c) applies to the transfer only to the extent P's gain is taken into account in tax years beginning before January 1, 1995.

(e) *Non-applicability of section 163(e)(5)*. Section 163(e)(5) does not apply to any intercompany obligation (within the meaning of §1.1502–13(g)) issued in a consolidated return year beginning on or after July 12, 1995.

(f) *Non-applicability of section 1031*. Section 1031 does not apply to any intercompany transaction occurring in consolidated return years beginning on or after July 12, 1995.

(g) *Special rules for liquidations to which section 332 applies*. Notwithstanding the general rule of section 381, if multiple members (distributee members) acquire assets of a corporation in a liquidation to which section 332 applies (regardless of whether any single member owns stock in the liquidating corporation meeting the requirements of section 1504(a)(2)), such members succeed to and take into account the items of the liquidating corporation (including items described in section 381(c), but excluding intercompany items under §1.1502–13) as provided in this paragraph (g) to the extent not otherwise prohibited by any applicable provision of law. This paragraph (g) does not apply to the intercompany items of the liquidating corporation. See §1.1502–13(j)(2)(ii).

(1) *Income offset items and deferred income*. Except as otherwise provided in this paragraph (g)(1), each distributee member succeeds to and takes into account the items of the liquidating corporation that could be used to offset the income of the group or any member (including deferred deductions, net operating loss carryovers, and capital loss carryovers) (income offset items) to the extent that such items would have been reflected in investment adjustments to the stock of the liquidating corporation owned by such distributee member under §1.1502–32(c) if, immediately prior to the liquidation, any stock of the liquidating corporation owned by nonmembers had been redeemed and then such items had been taken into account. However, each distributee member succeeds to the full amount of any deferred deduction or deferred income item attributable to the particular property or business operations distributed to such distributee in the liquidation to the extent that such item is not taken into account in the determination of the income or loss of the liquidating corporation with regard to the liquidation under chapter 1 of the Internal Revenue Code (Code). If the liquidating corporation is not a member of the group at the time of the liquidation, the rules of this paragraph (g)(1) are applied as if the liquidating corporation had been a member of the group.

(2) *Accounting for deferred income items*. Solely for the purpose of determining whether deferred income items of a liquidating corporation are taken into account under applicable principles of law as a result of a liquidation to which section 332 applies, the transfer of property to, and the assumption of liabilities by, a distributee member that does not own stock in the liquidating corporation meeting the requirements of section 1504(a)(2) without regard to the application of §1.1502–34 immediately prior to the liquidation is

not treated as part of a transaction to which section 381(a) applies. In addition, section 332(a) does not apply in determining the recognition or nonrecognition of any income realized by the distributee member under applicable principles of law on account of consideration received (or deemed received) on the assumption of the liquidating corporation's obligation or liability attributable to any deferred income item.

(3) *Credits and earnings and profits.* Each distributee member succeeds to and takes into account a percentage of each credit of the liquidating corporation equal to the value of the stock of the liquidating corporation owned by such distributee at the time of the liquidation divided by the total value of all the stock of the liquidating corporation owned by members of the group at the time of the liquidation. Except to the extent that the distributee member's earnings and profits already reflect the liquidating corporation's earnings and profits, each distributee member succeeds to and takes into account under the principles of §1.1502–32(c) the earnings and profits, or deficit in earnings and profits, of the liquidating corporation (determined after taking into account the amount of earnings and profits properly applicable to distributions to non-member shareholders under §1.381(c)(2)–1(c)(2)). If the liquidating corporation is not a member of the group at the time of the liquidation, the rules of this paragraph (g)(3) are applied as if the liquidating corporation had been a member of the group.

(4) *Other items.* With regard to items to which neither paragraph (g)(1) nor (g)(3) of this section applies, a distributee member that, immediately prior to the liquidation, owns stock in the liquidating corporation meeting the requirements of section 1504(a)(2) without regard to the application of §1.1502–34 succeeds to the items of the liquidating corporation in accordance with section 381 and other applicable principles. A distributee member that, immediately prior to the liquidation, does not own stock in the liquidating corporation meeting the requirements of section 1504(a)(2) without regard to the application of §1.1502–34 succeeds to the items of the liquidating corporation to the extent that it would have succeeded to those items if it had purchased, in a taxable transaction, the assets or businesses of the liquidating corporation that it received in the liquidation and had assumed the liabilities that it assumed in the liquidation.

(5) *Determination of the items of a liquidating subsidiary.* For purposes of this section, the items of a liquidating subsidiary include the amount of any consolidated tax attribute attributable to the liquidating subsidiary that is determined pursuant to the principles of §1.1502–21(b)(2)(iv). In addition, if the liquidating subsidiary is a member of a separate return limitation year subgroup, the amount of a tax attribute that arose in a separate return limitation year that is attributable to that member shall also be determined pursuant to the principles of §1.1502–21(b)(2)(iv).

(6) *Examples.* The following examples illustrate the application of this paragraph (g):

Example 1. Liquidation—80 percent distributee. (i) *Facts.* X has only common stock outstanding. On January 1 of year 1, X acquired equipment with a 10-year recovery period and elected to depreciate the equipment using the straight-line method of depreciation. On January 1 of year 7, M1 and M2 own 80 percent and 20 percent, respectively, of X's stock. X is a domestic corporation but is not a member of the group that includes M1 and M2. On that date, X distributes all of its assets to M1 and M2 in complete liquidation. The equipment is distributed to M1. Under section 334(b), M1's basis in the equipment is the same as it would be in X's hands. After computing its tax liability for the taxable year that includes the liquidation, X has net operating losses of $100, business credits of $40, and earnings and profits of $80.

(ii) *Succession to items described in section 381(c).* (A) *Losses.* Under paragraph (g)(1) of this section, each distributee member succeeds to X's items that could be used to offset the income of the group or any member to the extent that such items would have been reflected in investment adjustments to the stock of X it owned under §1.1502–32(c) if, immediately prior to the liquidation, such items had been taken into account. Accordingly, M1 and M2 succeed to $80 and $20, respectively, of X's net operating loss.

(B) *Credits and earnings and profits.* Under paragraph (g)(3) of this section, because, immediately prior to the liquidation, M1 and M2 hold 80 percent and 20 percent, respectively, of the value of the stock of X, M1 and

M2 succeed to $32 and $8, respectively, of X's $40 of business credits. In addition, because M1's and M2's earnings and profits do not reflect X's earnings and profits, X's earnings and profits are allocated to M1 and M2 under the principles of §1.1502–32(c). Therefore, M1 and M2 succeed to $64 and $16, respectively, of X's earnings and profits.

(C) *Depreciation of equipment's basis.* Under paragraph (g)(4) of this section, because M1 owns stock in X meeting the requirements of section 1504(a)(2) without regard to the application of §1.1502–34, M1 is required to continue to depreciate the equipment using the straight-line method of depreciation over the remaining recovery period of 4.5 years (assuming X used a half-year convention).

Example 2. Liquidation-no 80 percent distributee. (i) *Facts.* The facts are the same as in *Example 1* except that M1 and M2 own 60 percent and 40 percent, respectively, of X's stock. In addition, on January 1 of year 6, X entered into a long-term contract with Y, an unrelated party. The total contract price is $1000, and X estimates the total allocable contract costs to be $500. At the time of the liquidation, X had received $250 in progress payments under the contract and incurred costs of $125. X accounted for the contract under the percentage of completion method described in section 460(b). In the liquidation, M1 assumes X's contract obligations and rights.

(ii) *Succession to items described in section 381(c).* (A) *Losses.* Under paragraph (g)(1) of this section, each distributee member succeeds to X's items that could be used to offset the income of the group or any member to the extent that such items would have been reflected in investment adjustments to the stock of X it owned under §1.1502–32(c) if, immediately prior to the liquidation, such items had been taken into account. Accordingly, M1 and M2 succeed to $60 and $40, respectively, of X's net operating loss.

(B) *Credits and earnings and profits.* Under paragraph (g)(3) of this section, because, immediately prior to the liquidation, M1 and M2 hold 60 percent and 40 percent, respectively, of the value of the stock of X, M1 and M2 succeed to $24 and $16, respectively, of X's $40 of business credits. In addition, because M1's and M2's earnings and profits do not reflect X's earnings and profits, X's earnings and profits are allocated to M1 and M2 under the principles of §1.1502–32(c). Therefore, M1 and M2 succeed to $48 and $32, respectively, of X's earnings and profits.

(C) *Depreciation of equipment's basis.* Under section 334(a), M1's basis in the equipment is its fair market value at the time of the distribution. Pursuant to section 168(i)(7), to the extent that M1's basis in the equipment does not exceed X's adjusted basis in the equipment at the time of the transfer, M1 is required to continue to depreciate the equipment using the straight-line method of depreciation over the remaining recovery period of 4.5 years (assuming X used a half-year convention). Any portion of M1's basis in the equipment that exceeds X's adjusted basis in the equipment at the time of the transfer is treated as being placed in service by M1 in the year of the transfer. Thus, M1 may choose any applicable depreciation method, recovery period, and convention under section 168 for such excess basis.

(D) *Method of accounting for long-term contract.* Under paragraph (g)(4) of this section, M1 does not succeed to X's method of accounting for the contract. Rather, under §1.460–4(k)(2), M1 is treated as having entered into a new contract on the date of the liquidation. Under §1.460–4(k)(2)(iii), M1 must evaluate whether the new contract should be classified as a long-term contract within the meaning of §1.460–1(b) and account for the contract under a permissible method of accounting.

Example 3. Liquidation—deferred items. (i) *Facts.* X has only common stock outstanding, and M1 and M2 (who are members of the same group) own 80 percent and 20 percent, respectively, of X's stock. X operates two divisions, each of which defers prepaid subscription income pursuant to an election under section 455. X distributes all of its assets in complete liquidation. M1 receives all of the assets of Division 1, including prepaid subscription income, and assumes X's liability to furnish or deliver the newspaper, magazine, or other periodical to which the prepaid subscription income received by M1 relates. M2 receives all of the assets of Division 2, including prepaid subscription income, and assumes X's liability to furnish or deliver the newspaper, magazine, or other periodical to which the prepaid subscription income received by M2 relates.

(ii) *Acceleration of deferred income items and succession to other deferred items.* Under paragraph (g)(1) of this section, M1 succeeds to the full amount of the deferred prepaid subscription income of X attributable to Division 1. Under applicable law, X does not recognize the deferred prepaid subscription income attributable to Division 1 because X's liability to furnish or deliver the newspaper, magazine, or other periodical ends as a result of a transaction to which section 381(a) applies. Under paragraph (g)(2) of this section, solely for purposes of determining whether the deferred income items of X attributable to Division 2 are taken into account as a result of the liquidation, the distribution of property to M2 is not treated as a transaction to which section 381(a) applies. Therefore, under applicable law, X's deferred prepaid subscription income attributable to Division 2 is taken into account in the determination of X's income or loss with regard to the liquidation. Further, under paragraph (g)(2) of this section, section 332(a) does not

apply in determining the recognition or nonrecognition of any income that M2 realizes on account of consideration received (or deemed received) on its assumption of X's liability to furnish or deliver the newspaper, magazine, or other periodical to which the prepaid subscription income relates.

(7) *Effective/applicability date.* This paragraph (g) applies to transactions occurring after April 14, 2008.

(h) *Non-applicability of section 362(e)(2)*—(1) *General rule.* Section 362(e)(2) does not apply to any intercompany transaction occurring on or after September 17, 2008. Taxpayers may apply this paragraph (h) to intercompany transactions occurring on or after October 22, 2004, and in such case, any election made under section 362(e)(2)(C) will have no effect. The purpose of this paragraph (h) is to facilitate the application of the consolidated return provisions addressing the duplication of loss between members of a consolidated group.

(2) *Anti-abuse rule*—(i) *General rule.* If a taxpayer engages in a transaction to which section 362(e)(2) would apply but for the application of paragraph (h)(1) of this section, and acts with a view to prevent the consolidated return provisions from properly addressing loss duplication, appropriate adjustments will be made to clearly reflect the income of the group.

(ii) *Example.* The following example illustrates the principle of the anti-abuse rule in this paragraph (h)(2).

Example. (A) *Facts.* P, the common parent of a consolidated group, owns the four outstanding shares of S stock (Share 1 through Share 4) with an aggregate basis of $0 and value of $80. S owns Asset 1 with a basis of $0 and a value of $80. With a view to prevent the consolidated return provisions from addressing the duplication of loss, P transfers Asset 2 with a basis of $100 and a value of $20 to S in exchange for an additional share of S stock (Share 5) in a transaction to which section 351 applies. P later sells Share 5 to X, an unrelated person, for $20 at a time when S's basis in Asset 2 was still $100. The sale is a transfer of a loss share and therefore subject to § 1.1502–36.

(B) *Analysis.* Although the sale would be subject to § 1.1502–36, that section would not prevent the stock loss or reduce S's attributes (to prevent duplication of the stock loss) because neither § 1.1502–36(b) nor § 1.1502–36(c) would adjust the basis of the transferred share (because there are no investment adjustments) and § 1.1502–36(d) would not reduce S's attributes (because S's aggregate inside loss is $0). However, because P acted with a view to prevent the consolidated return provisions from addressing the duplication of the loss on Asset 2, P's transfer of Asset 2 to S is subject to the anti-abuse rule in this paragraph (h)(2). Accordingly, effective immediately before the transfer of Share 5 to X, either P's basis in Share 5 or S's basis in Asset 2 must be adjusted to reflect what it would have been had section 362(e)(2) been applied at the time P transferred Asset 2 to S (taking into account the interim facts and circumstances). Accordingly, S must either reduce its basis in Asset 2 by $80 to $20 (eliminating the duplicated loss) or P must reduce its basis in Share 5 by $80 to $20 (eliminating the duplicated loss).

(C) *Transfer of all S shares.* Assume the same facts as those in paragraph (A) of this *Example,* except that P sells all five S shares to X. Although P's transfer of Asset 2 to S results in the duplication of an $80 loss, because all the shares are transferred, the transaction does not prevent the consolidated return provisions from properly addressing loss duplication. P's $80 duplicated loss is offset by an $80 duplicated gain, and the group recognizes the offsetting stock gain and loss. Accordingly, this paragraph (h)(2) does not apply to P's transfer of Asset 2 to S.

[T.D. 8402, 57 FR 9385, Mar. 18, 1992]

EDITORIAL NOTE: For FEDERAL REGISTER citations affecting § 1.1502–80, see the List of CFR Sections Affected, which appears in the Finding Aids section of the printed volume and at *www.fdsys.gov.*

§ 1.1502–81T Alaska Native Corporations.

(a) *General Rule.* The application of section 60(b)(5) of the Tax Reform Act of 1984 and section 1804(e)(4) of the Tax Reform Act of 1986 (relating to Native Corporations established under the Alaska Native Claims Settlement Act (43 U.S.C. 1601 *et seq.*)) is limited to the use on a consolidated return of losses and credits of a Native Corporation, and of a corporation all of whose stock is owned directly by a Native Corporation, during any taxable year (beginning after the effective date of such sections and before 1992), or any part thereof, against the income and tax liability of a corporation affiliated with the Native Corporation. Thus, no other tax saving, tax benefit, or tax loss is intended to result from the application of section 60(b)(5) of the Tax Reform Act of 1984 and section 1804(e)(4) of the

Tax Reform Act of 1986 to any person (whether or not such person is a member of an affiliated group of which a Native Corporation is the common parent). In particular, except as approved by the Secretary, no positive adjustment under §1.1502–32(b) will be made with respect to the basis of stock of a corporation that is affiliated with a Native Corporation through application of section 60(b)(5) of the Tax Reform Act of 1984 and section 1804(e)(4) of the Tax Reform Act of 1986.

(b) *Effective Dates*. This section applies to taxable years beginning after December 31, 1984.

[T.D. 8130, 52 FR 8448, Mar. 18, 1987, as amended by T.D. 8560, 59 FR 41675, Aug. 15, 1994]

§ 1.1502–90 Table of contents.

The following list contains the major headings in §§1.1502-91 through 1.1502–99:

§ 1.1502–91 Application of section 382 with respect to a consolidated group.

(a) Determination and effect of an ownership change.
(1) In general.
(2) Special rule for post-change year that includes the change date.
(3) Cross-reference.
(b) Definitions and nomenclature.
(c) Loss group.
(1) Defined.
(2) Coordination with rule that ends separate tracking.
(3) Example.
(d) Loss subgroup.
(1) Net operating loss carryovers.
(2) Net unrealized built-in loss.
(3) Loss subgroup parent.
(4) Election to treat loss subgroup parent requirement as satisfied.
(5) Principal purpose of avoiding a limitation.
(6) Special rules.
(7) Examples.
(e) Pre-change consolidated attribute.
(1) Defined.
(2) Example.
(f) Pre-change subgroup attribute.
(1) Defined.
(2) Example.
(g) Net unrealized built-in gain and loss.
(1) In general.
(2) Members included.
(i) Consolidated group with a net operating loss.
(ii) Determination whether a consolidated group has a net unrealized built-in loss.
(iii) Loss subgroup with net operating loss carryovers.
(iv) Determination whether subgroup has a net unrealized built-in loss.
(v) Separate determination of section 382 limitation for recognized built-in losses and net operating losses.
(3) Coordination with rule that ends separate tracking.
(4) Acquisitions of built-in gain or loss assets.
(5) Indirect ownership.
(6) Common parent not common parent for five years.
(h) Recognized built-in gain or loss.
(1) In general. [Reserved]
(2) Disposition of stock or an intercompany obligation of a member.
(3) Intercompany transactions.
(4) Exchanged basis property.
(i) [Reserved]
(j) Predecessor and successor corporations.

§ 1.1502–92 Ownership change of a loss group or a loss subgroup.

(a) Scope.
(b) Determination of an ownership change.
(1) Parent change method.
(i) Loss group.
(ii) Loss subgroup.
(iii) Special rule if election regarding section 1504(a)(1) relationship is made.
(2) Examples.
(3) Special adjustments.
(i) Common parent succeeded by a new common parent.
(ii) Newly created loss subgroup parent.
(iii) Examples.
(4) End of separate tracking of certain losses.
(c) Supplemental rules for determining ownership change.
(1) Scope.
(2) Cause for applying supplemental rule.
(3) Operating rules.
(4) Supplemental ownership change rules.
(i) Additional testing dates for the common parent (or loss subgroup parent).
(ii) Treatment of subsidiary stock as stock of the common parent (or loss subgroup parent).
(iii) Different testing periods.
(iv) Disaffiliation of a subsidiary.
(v) Subsidiary stock acquired first.
(vi) Anti-duplication rule.
(5) Examples.
(d) Testing period following ownership change under this section.
(e) Information statements.
(1) Common parent of a loss group.
(2) Abbreviated statement with respect to loss subgroups.

§ 1.1502–93 Consolidated section 382 limitation (or subgroup section 382 limitation).

(a) Determination of the consolidated section 382 limitation (or subgroup section 382 limitation).
(1) In general.
(2) Coordination with apportionment rule.
(b) Value of the loss group (or loss subgroup).
(1) Stock value immediately before ownership change.
(2) Adjustment to value.
(i) In general.
(ii) Anti-duplication.
(3) Examples.
(c) Recognized built-in gain of a loss group or loss subgroup.
(1) In general.
(2) Adjustments.
(d) Continuity of business.
(1) In general.
(2) Example.
(e) Limitations of losses under other rules.

§ 1.1502–94 Coordination with section 382 and the regulations thereunder when a corporation becomes a member of a consolidated group.

(a) Scope.
(1) In general.
(2) Successor corporation as new loss member.
(3) Coordination in the case of a loss subgroup.
(4) End of separate tracking of certain losses.
(5) Cross-reference.
(b) Application of section 382 to a new loss member.
(1) In general.
(2) Adjustment to value.
(3) Pre-change separate attribute defined.
(4) Examples.
(c) Built-in gains and losses.
(d) Information statements.

§ 1.1502–95 Rules on ceasing to be a member of a consolidated group (or loss subgroup).

(a) In general.
(1) Consolidated group.
(2) Election by common parent.
(3) Coordination with §§1.1502–91 through 1.1502–93.
(b) Separate application of section 382 when a member leaves a consolidated group.
(1) In general.
(2) Effect of a prior ownership change of the group.
(3) Application in the case of a loss subgroup.
(4) Examples.
(c) Apportionment of a consolidated section 382 limitation.
(1) In general.
(2) Amount which may be apportioned.
(i) Consolidated section 382 limitation.
(ii) Net unrealized built-in gain.
(3) Effect of apportionment on the consolidated group.
(i) Consolidated section 382 limitation.
(ii) Net unrealized built-in gain.
(4) Effect on corporations to which an apportionment is made.
(i) Consolidated section 382 limitation.
(ii) Net unrealized built-in gain.
(5) Deemed apportionment when loss group terminates.
(6) Appropriate adjustments when former member leaves during the year.
(7) Examples.
(d) Rules pertaining to ceasing to be a member of a loss subgroup.
(1) In general.
(2) Exceptions.
(3) Examples.
(e) Allocation of net unrealized built-in loss.
(1) In general.
(2) Amount of allocation.
(i) In general.
(ii) Transferred basis property and deferred gain or loss.
(iii) Assets for which gain or loss has been recognized.
(iv) Exchanged basis property.
(v) Two or more members depart during the same year.
(vi) Anti-abuse rule.
(3) Effect of the allocation on the consolidated group.
(4) Effect on corporations to which the allocation is made.
(5) Subgroup principles.
(6) Apportionment of consolidated section 382 limitation (or subgroup section 382 limitation).
(i) In general.
(ii) Special rule for former members that become members of the same consolidated group.
(7) Examples.
(8) Reporting requirements.
(i) Common parent.
(ii) Former member.
(iii) Exception.
(f) Filing the election to apportion the section 382 limitation and net unrealized built-in gain.
(1) Form of the election to apportion.
(i) Statement.
(ii) Agreement.
(2) Signing the agreement.
(3) Filing the election.
(i) Filing by the common parent.
(ii) Filing by the former member.
(4) Revocation of election.
(g) Effective/applicability date.

§ 1.1502–96 Miscellaneous rules.

(a) End of separate tracking of losses.
(1) Application.
(2) Effect of end of separate tracking.
(i) Net operating loss carryovers.

(ii) Net unrealized built-in losses.
(iii) Common parent not common parent for five years.
(3) Continuing effect of end of separate tracking.
(i) In general.
(ii) Example.
(4) Special rule for testing period.
(5) Limits on effects of end of separate tracking.
(b) Ownership change of subsidiary.
(1) Ownership change of a subsidiary because of options or plan or arrangement.
(2) Effect of the ownership change.
(i) In general.
(ii) Pre-change losses.
(3) Coordination with §§1.1502–91, 1.1502–92, and 1.1502–94.
(4) Example.
(c) Continuing effect of an ownership change.
(d) Losses reattributed under §1.1502–36(d)(6).
(1) In general.
(2) Deemed section 381(a) transaction.
(3) Rules relating to owner shifts.
(i) In general.
(ii) Examples.
(4) Rules relating to the section 382 limitation.
(i) Reattributed loss is a pre-change separate attribute of a new loss member.
(ii) Reattributed loss is a pre-change subgroup attribute.
(iii) Potential application of section 382(l)(1).
(iv) Duplication or omission of value.
(v) Special rule for continuity of business requirement.
(5) Election to reattribute section 382 limitation.
(i) Effect of election.
(ii) Examples.
(e) Time and manner of making election under §1.1502–91(d)(4).
(1) In general.
(2) Election statement.

§ 1.1502–97 Special rules under section 382 for members under the jurisdiction of a court in a title 11 or similar case. [Reserved]

§ 1.1502–98 Coordination with section 383.

§ 1.1502–99 Effective dates.

(a) Effective date.
(b) Special rules.
(1) Election to treat subgroup parent requirement as satisfied.
(2) Principal purpose of avoiding a limitation.
(3) Ceasing to be a member of a loss subgroup.
(i) Ownership change of a loss subgroup.
(ii) Expiration of 5-year period.
(4) Reattribution of net operating loss carryovers under §1.1502–36(d)(6).
(5) Election to apportion net unrealized built-in gain.
(c) Testing period may include a period beginning before June 25, 1999.
(1) In general.
(2) Transition rule for net unrealized built-in losses.

[T.D. 8824, 64 FR 36128, July 2, 1999, as amended by T.D. 9304, 71 FR 76907, Dec. 22, 2006; T.D. 9329, 72 FR 32805, June 14, 2007; T.D. 9424, 73 FR 53986, Sept. 17, 2008]

§ 1.1502–91 Application of section 382 with respect to a consolidated group.

(a) *Determination and effect of an ownership change*—(1) *In general.* This section and §§1.1502–92 and 1.1502–93 set forth the rules for determining an ownership change under section 382 for members of consolidated groups and the section 382 limitations with respect to attributes described in paragraphs (e) and (f) of this section. These rules generally provide that an ownership change and the section 382 limitation are determined with respect to these attributes for the group (or loss subgroup) on a single entity basis and not for its members separately. Following an ownership change of a loss group (or a loss subgroup) under §1.1502–92, the amount of consolidated taxable income for any post-change year which may be offset by pre-change consolidated attributes (or pre-change subgroup attributes) shall not exceed the consolidated section 382 limitation (or subgroup section 382 limitation) for such year as determined under §1.1502–93.

(2) *Special rule for post-change year that includes the change date.* If the post-change year includes the change date, section 382(b)(3)(A) is applied so that the consolidated section 382 limitation (or subgroup section 382 limitation) does not apply to the portion of consolidated taxable income that is allocable to the period in the year on or before the change date. See generally §1.382–6 (relating to the allocation of income and loss). The allocation of consolidated taxable income for the post-change year that includes the change date must be made before taking into account any consolidated net operating loss deduction (as defined in §1.1502–21(a)).

(3) *Cross-reference.* See §§1.1502–94 and 1.1502–95 for rules that apply section 382

to a corporation that becomes or ceases to be a member of a group or loss subgroup.

(b) *Definitions and nomenclature.* For purposes of this section and §§ 1.1502–92 through 1.1502–99, unless otherwise stated:

(1) The definitions and nomenclature contained in section 382 and the regulations thereunder (including the nomenclature and assumptions relating to the examples in § 1.382–2T(b)) and this section and §§ 1.1502–92 through 1.1502–99 apply.

(2) In all examples, all groups file consolidated returns, all corporations file their income tax returns on a calendar year basis, the only 5-percent shareholder of a corporation is a public group, the facts set forth the only owner shifts during the testing period, no election is made under paragraph (d)(4) of this section, and each asset of a corporation has a value equal to its adjusted basis.

(3) As the context requires, references to §§ 1.1502–91 through 1.1502–96 include references to corresponding provisions of §§ 1.1502–A through 1.1502–96A. For example, a reference to an ownership change under § 1.1502–92 in § 1.1502–95(b) can include a reference to an ownership change under § 1.1502–92A.

(c) *Loss group*—(1) *Defined.* A loss group is a consolidated group that—

(i) Is entitled to use a net operating loss carryover to the taxable year that did not arise (and is not treated under § 1.1502–21(c) as arising) in a SRLY;

(ii) Has a consolidated net operating loss for the taxable year in which a testing date of the common parent occurs (determined by treating the common parent as a loss corporation); or

(iii) Has a net unrealized built-in loss (determined under paragraph (g) of this section by treating the date on which the determination is made as though it were a change date).

(2) *Coordination with rule that ends separate tracking.* A consolidated group may be a loss group because a member's losses that arose in (or are treated as arising in) a SRLY are treated as described in paragraph (c)(1)(i) of this section. See § 1.1502–96(a).

(3) *Example.* The following example illustrates the principles of this paragraph (c):

Example. Loss group. (i) L and L1 file separate returns and each has a net operating loss carryover arising in Year 1 that is carried over to Year 2. A owns 40 shares and L owns 60 shares of the 100 outstanding shares of L1 stock. At the close of Year 1, L buys the 40 shares of L1 stock from A. For Year 2, L and L1 file a consolidated return. The following is a graphic illustration of these facts:

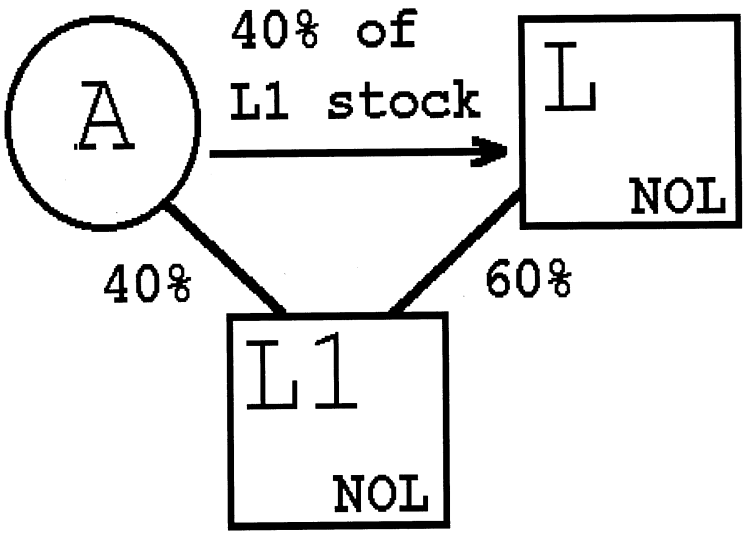

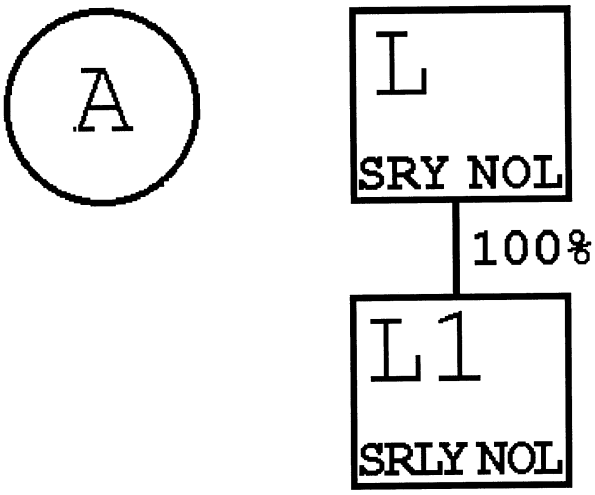

(ii) L and L1 become a loss group at the beginning of Year 2 because the group is entitled to use the Year 1 net operating loss carryover of L, the common parent, which did not arise (and is not treated under §1.1502–21(c) as arising) in a SRLY. See §1.1502–94 for rules relating to the application of section 382 with respect to L1's net operating loss

carryover from Year 1 which did arise in a SRLY.

(d) *Loss subgroup*—(1) *Net operating loss carryovers*. Two or more corporations that become members of a consolidated group (the current group) compose a loss subgroup if—

(i) They were affiliated with each other in another group (the former group), whether or not the group was a consolidated group;

(ii) They bear the relationship described in section 1504(a)(1) to each other through a loss subgroup parent immediately after they become members of the current group (or are deemed to bear that relationship as a result of an election described in paragraph (d)(4) of this section); and

(iii) At least one of the members carries over a net operating loss that did not arise (and is not treated under §1.1502–21(c) as arising) in a SRLY with respect to the former group.

(2) *Net unrealized built-in loss*. Two or more corporations that become members of a consolidated group compose a loss subgroup if they—

(i) Have been continuously affiliated with each other for the 5 consecutive year period ending immediately before they become members of the group;

(ii) Bear the relationship described in section 1504(a)(1) to each other through a loss subgroup parent immediately after they become members of the current group (or are deemed to bear that relationship as a result of an election described in paragraph (d)(4) of this section); and

(iii) Have a net unrealized built-in loss (determined under paragraph (g) of this section on the day they become members of the group by treating that day as though it were a change date).

(3) *Loss subgroup parent*. A loss subgroup parent is the corporation that bears the same relationship to the other members of the loss subgroup as a common parent bears to the members of a group.

(4) *Election to treat loss subgroup parent requirement as satisfied*—(i) *In general*. Solely for purposes of paragraphs (d)(1)(i) and (2)(ii) of this section, two or more corporations that become members of a consolidated group at the same time and that were affiliated with each other immediately before becoming members of the group are deemed to bear a section 1504(a)(1) relationship to each other immediately after they become members of the group if the common parent of that group makes an election under this paragraph (d)(4) with respect to those members. See §1.1502–96(e) for the time and manner of making the election.

(ii) *Members included*. An election under this paragraph (d)(4) includes all corporations that become members of the current group at the same time and that were affiliated with each other immediately before they become members of the current group.

(iii) *Each member included treated as loss subgroup parent*. If the members to which this election applies are a loss subgroup described in paragraph (d)(1) or (2) of this section, then each member is treated as a loss subgroup parent. See §1.1502–92(b)(1)(iii) for special rules relating to an ownership change of a loss subgroup if the election under this paragraph (d)(4) is made.

(5) *Principal purpose of avoiding a limitation*. The corporations described in paragraphs (d)(1) or (2) of this section do not compose a loss subgroup if any one of them is formed, acquired, or availed of with a principal purpose of avoiding the application of, or increasing any limitation under, section 382. Instead, §1.1502–94 applies with respect to the attributes of each such corporation. Any member excluded from a loss subgroup, if excluded with a principal purpose of so avoiding or increasing any section 382 limitation, is treated as included in the loss subgroup. This paragraph (d)(5) does not apply solely because, in connection with becoming members of the group, the members of a group (or loss subgroup) are rearranged (or, in the case of the preceding sentence, are not rearranged) to bear a relationship to the other members described in section 1504(a)(1).

(6) *Special rules*. See §1.1502–95(d) for rules concerning when a corporation ceases to be a member of a loss subgroup, and for certain exceptions that may apply if a member does not continue to satisfy the loss subgroup parent requirement within the current group. See also §1.1502–96(a) for a special rule regarding the end of separate tracking of SRLY losses of a member

that has an ownership change or that has been a member of a group for at least 5 consecutive years.

(7) *Examples*. The following examples illustrate the principles of this paragraph (d):

Example 1. Loss subgroup. (i) P owns all the L stock and L owns all the L1 stock. The P group has a consolidated net operating loss arising in Year 1 that is carried to Year 2. On May 2, Year 2, P sells all the stock of L to A, and L and L1 thereafter file consolidated returns. A portion of the Year 1 consolidated net operating loss is apportioned under §1.1502–21(b) to each of L and L1, which they carry over to Year 2. The following is a graphic illustration of these facts:

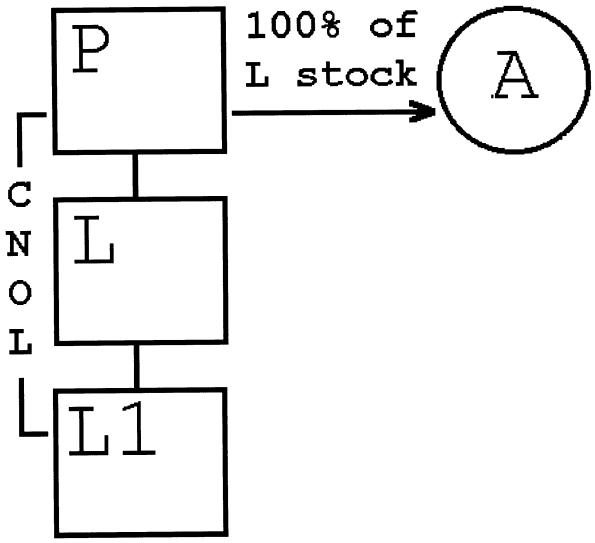

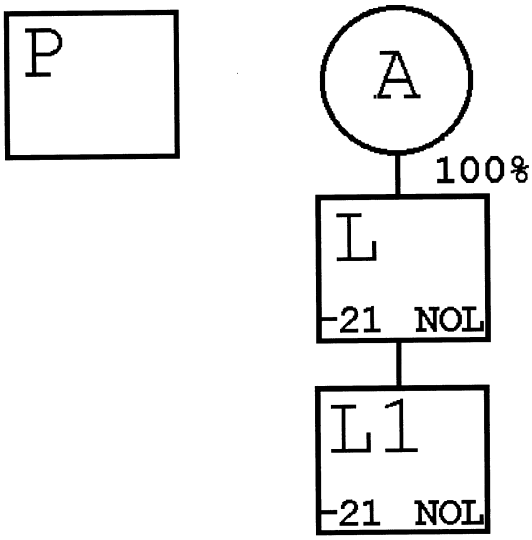

(ii) (a) L and L1 compose a loss subgroup within the meaning of paragraph (d)(1) of this section because—

(A) They were affiliated with each other in the P group (the former group);

(B) They bear a relationship described in section 1504(a)(1) to each other through a

loss subgroup parent (L) immediately after they became members of the L group; and

(C) At least one of the members (here, both L and L1) carries over a net operating loss to the L group (the current group) that did not arise in a SRLY with respect to the P group.

(b) Under paragraph (d)(3) of this section, L is the loss subgroup parent of the L loss subgroup.

Example 2. Loss subgroup—section 1504(a)(1) relationship. (i) P owns all the stock of L and L1. L owns all the stock of L2. L1 and L2 own 40 percent and 60 percent of the stock of L3, respectively. The P group has a consolidated net operating loss arising in Year 1 that is carried over to Year 2. On May 22, Year 2, P sells all the stock of L and L1 to P1, the common parent of another consolidated group. The Year 1 consolidated net operating loss is apportioned under §1.1502–21(b), and each of L, L1, L2, and L3 carries over a portion of such loss to the first consolidated return year of the P1 group ending after the acquisition. The following is a graphic illustration of these facts:

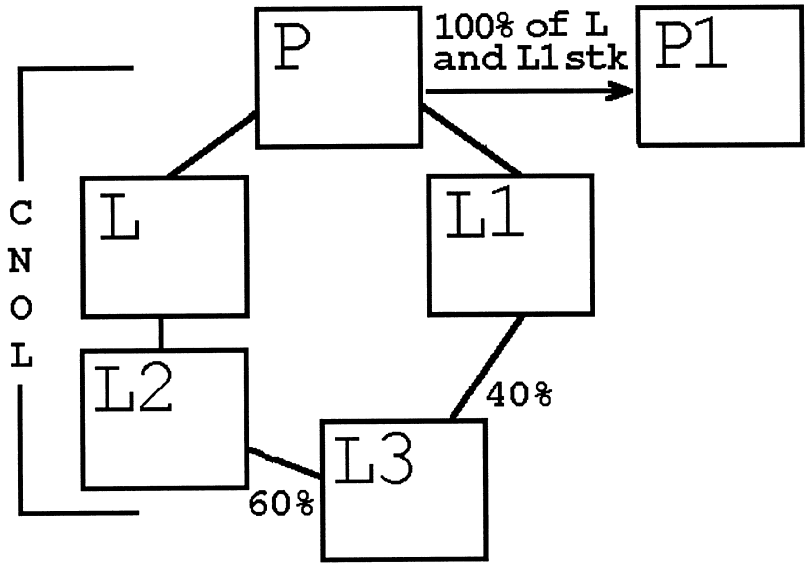

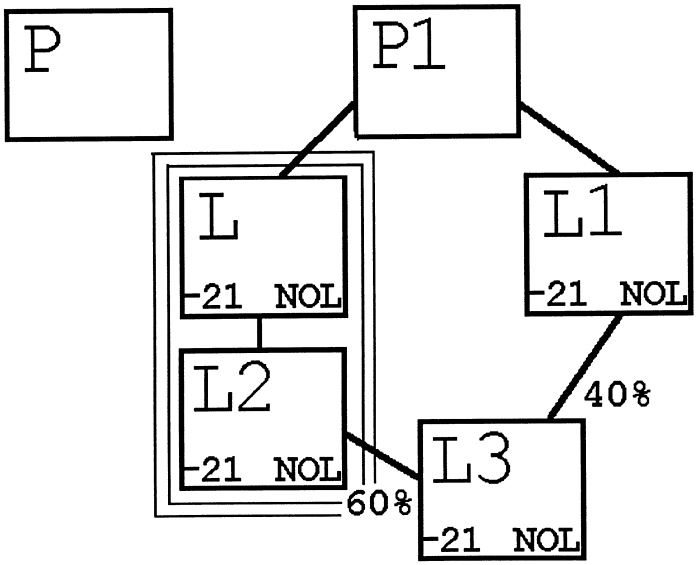

(ii) L and L2 compose a loss subgroup within the meaning of paragraph (d)(1) of this section. Neither L1 nor L3 is included in a loss subgroup because neither bears a relationship described in section 1504(a)(1) through a loss subgroup parent to any other member of the former group immediately after becoming members of the P1 group.

Example 3. Loss subgroup—section 1504(a)(1) relationship. The facts are the same as in *Example 2,* except that the stock of L1 is transferred to L in connection with the sale of the L stock to P1. L, L1, L2, and L3 compose a loss subgroup within the meaning of paragraph (d)(1) of this section because—

(i) They were affiliated with each other in the P group (the former group);

(ii) They bear a relationship described in section 1504(a)(1) to each other through a loss subgroup parent (L) immediately after they become members of the P1 group; and

(iii) At least one of the members (here, each of L, L1, L2, and L3) carries over a net operating loss to the P1 group (the current group).

Example 4. Loss subgroup—elective section 1504(a)(1) relationship. The facts are the same as in *Example 2,* except that P1 makes the election under paragraph (d)(4) of this section. The election includes L, L1, L2, and L3 (even though L and L2 would compose a loss subgroup without regard to the election) because they become members of the current group (the P1 group) at the same time and were affiliated with each other in the P group immediately before they became members of the P1 group. As a result of the election, L, L1, L2, and L3 are treated as satisfying the requirement that they bear the relationship described in section 1504(a)(1) to each other through a loss subgroup parent immediately after they become members of the P1 group. L, L1, L2, and L3 compose a loss subgroup within the meaning of paragraph (d)(1) of this section.

(e) *Pre-change consolidated attribute*—(1) *Defined.* A pre-change consolidated attribute of a loss group is—

(i) Any loss described in paragraph (c)(1)(i) or (ii) of this section (relating to the definition of loss group) that is allocable to the period ending on or before the change date; and

(ii) Any recognized built-in loss of the loss group.

(2) *Example.* The following example illustrates the principle of this paragraph (e):

Example. Pre-change consolidated attribute. (i) The L group has a consolidated net operating loss arising in Year 1 that is carried over to Year 2. The L loss group has an ownership change at the beginning of Year 2.

(ii) The net operating loss carryover of the L loss group from Year 1 is a pre-change consolidated attribute because the L group was entitled to use the loss in Year 2 and therefore the loss was described in paragraph (c)(1)(i) of this section. Under paragraph (a)(2)(i) of this section, the amount of consolidated taxable income of the L group for Year 2 that may be offset by this loss carryover may not exceed the consolidated section 382 limitation of the L group for that year. See §1.1502–93 for rules relating to the computation of the consolidated section 382 limitation.

(f) *Pre-change subgroup attribute*—(1) *Defined.* A pre-change subgroup attribute of a loss subgroup is—

(i) Any net operating loss carryover described in paragraph (d)(1)(iii) of this section (relating to the definition of loss subgroup); and

(ii) Any recognized built-in loss of the loss subgroup.

(2) *Example.* The following example illustrates the principle of this paragraph (f):

Pre-change subgroup attribute. (i) P is the common parent of a consolidated group. P owns all the stock of L, and L owns all the stock of L1. L2 is not a member of an affiliated group, and has a net operating loss arising in Year 1 that is carried over to Year 2. On December 11, Year 2, L1 acquires all the stock of L2, causing an ownership change of L2. During Year 2, the P group has a consolidated net operating loss that is carried over to Year 3. On November 2, Year 3, M acquires all the L stock from P. M, L, L1, and L2 thereafter file consolidated returns. All of the P group Year 2 consolidated net operating loss is apportioned under §1.1502–21(b) to L and L2, which they carry over to the M group.

(ii)(a) L, L1, and L2 compose a loss subgroup because—

(1) They were affiliated with each other in the P group (the former group);

(2) They bear a relationship described in section 1504(a)(1) to each other through a loss subgroup parent (L) immediately after they became members of the L group; and

(3) At least one of the members (here, both L and L2) carries over a net operating loss to the M group (the current group) that is described in paragraph (d)(1)(iii) of this section.

(b) For this purpose, L2's loss from Year 1 that was a SRLY loss with respect to the P group (the former group) is described in paragraph (d)(1)(iii) of this section because L2 had an ownership change on becoming a member of the P group (see §1.1502–96(a)) on December 11, Year 2. Starting on December 12, Year 2, the P group no longer separately tracked owner shifts of the stock of L1 with respect to the Year 1 loss. M's acquisition results in an ownership change of L, and therefore the L loss subgroup under §1.1502–92(a)(2). See §1.1502–93 for rules governing the computation of the subgroup section 382 limitation.

(iii) In the M group, L2's Year 1 loss continues to be subject to a section 382 limitation resulting from the ownership change that occurred on December 11, Year 2. See § 1.1502–96(c).

(g) *Net unrealized built-in gain and loss*—(1) *In general*. The determination whether a consolidated group (or loss subgroup) has a net unrealized built-in gain or loss under section 382(h)(3) is based on the aggregate amount of the separately computed net unrealized built-in gains or losses of each member that is included in the group (or loss subgroup) under paragraph (g)(2) of this section, including items of built-in income and deduction described in section 382(h)(6). Thus, for example, amounts deferred under section 267, or under § 1.1502–13 (other than amounts deferred with respect to the stock of a member (or an intercompany obligation) included in the group (or loss subgroup) under paragraph (g)(2) of this section) are built-in items. The threshold requirement under section 382(h)(3)(B) applies on an aggregate basis and not on a member-by-member basis. The separately computed amount of a member included in a group or loss subgroup does not include any unrealized built-in gain or loss on stock (including stock described in section 1504(a)(4) and § 1.382–2T(f)(18)(ii) and (iii)) of another member included in the group or loss subgroup (or an intercompany obligation). However, a member of a group or loss subgroup includes in its separately computed amount the unrealized built-in gain or loss on stock (but not on an intercompany obligation) of another member not included in the group or loss subgroup. If a member is not included in the determination whether a group (or subgroup) has a net unrealized built-in loss under paragraph (g)(2)(ii) or (iv) of this section, that member is not included in the loss group or loss subgroup. See § 1.1502–94(c) (relating to built-in gain or loss of a new loss member) and § 1.1502–96(a) (relating to the end of separate tracking of certain losses).

(2) *Members included*—(i) *Consolidated group with a net operating loss*. The members included in the determination whether a consolidated group described in paragraph (c)(1)(i) or (ii) of this section (relating to loss groups with net operating losses) has a net unrealized built-in gain are all members of the consolidated group on the day that the determination is made.

(ii) *Determination whether a consolidated group has a net unrealized built-in loss*. The members included in the determination whether a consolidated group is a loss group described in paragraph (c)(1)(iii) of this section are—

(A) The common parent and all other members that have been affiliated with the common parent for the 5 consecutive year period ending on the day that the determination is made;

(B) Any other member that has a net unrealized built-in loss determined under paragraph (g)(1) of this section on the date that the determination is made, and that is neither a new loss member described in § 1.1502–94(a)(1)(ii) nor a member of a loss subgroup described in paragraph (d)(2) of this section;

(C) Any new loss member described in § 1.1502–94(a)(1)(ii) that has a net unrealized built-in gain determined under paragraph (g)(1) of this section on the day that the determination is made; and

(D) The members of a loss subgroup described in paragraph (d)(2) of this section if the members of the subgroup have, in the aggregate, a net unrealized built-in gain on the day that the determination is made.

(iii) *Loss subgroup with net operating loss carryovers*. The members included in the determination whether a loss subgroup described in paragraph (d)(1) of this section (relating to loss subgroups with net operating loss carryovers) has a net unrealized built-in gain are all members of the loss subgroup on the day that the determination is made.

(iv) *Determination whether subgroup has a net unrealized built-in loss*. The members included in the determination whether a subgroup has a net unrealized built-in loss are those members described in paragraphs (d)(2)(i) and (ii) of this section.

(v) *Separate determination of section 382 limitation for recognized built-in losses and net operating losses*. In determining

whether a loss group described in paragraph (c)(1)(i) or (ii) of this section (relating to loss groups that have net operating loss carryovers) has a net unrealized built-in gain which, if recognized, increases the consolidated section 382 limitation, the group includes, under paragraph (g)(2)(i) of this section, all of its members on the day the determination is made. Under paragraph (g)(2)(ii) of this section, however, for purposes of determining whether a group has a net unrealized built-in loss described in paragraph (c)(1)(iii) of this section, not all members of the consolidated group may be included. Thus, a consolidated group may have recognized built-in gains that increase the amount of consolidated taxable income that may be offset by its pre-change net operating loss carryovers that did not arise (and are not treated as arising) in a SRLY, and also may have recognized built-in losses the absorption of which is limited. Similar results may obtain for loss subgroups under paragraphs (g)(2)(iii) and (iv) of this section. See §1.1502–93(c)(2) for rules prohibiting the use of recognized built-in gains to increase the amount of consolidated taxable income that can be offset by recognized built-in losses.

(3) *Coordination with rule that ends separate tracking*. See §1.1502–96(a) for special rules relating to members (or loss subgroups) that have an ownership change within six months before, on, or after becoming a member of the group.

(4) *Acquisitions of built-in gain or loss assets*. A member of a consolidated group (or loss subgroup) may not, in determining its separately computed net unrealized built-in gain or loss, include any gain or loss with respect to assets acquired with a principal purpose to affect the amount of its net unrealized built-in gain or loss. A group (or loss subgroup) may not, in determining its net unrealized built-in gain or loss, include any gain or loss of a member acquired with a principal purpose to affect the amount of its net unrealized built-in gain or loss.

(5) *Indirect ownership*. A member's separately computed net unrealized built-in gain or loss is adjusted to the extent necessary to prevent any duplication of unrealized gain or loss attributable to the member's indirect ownership interest in another member through a nonmember if the member has a 5-percent or greater ownership interest in the nonmember.

(6) *Common parent not common parent for five years*. If the common parent has become the common parent of an existing group within the previous 5 year period in a transaction described in §1.1502–75(d)(2)(ii) or (3), appropriate adjustments must be made in applying paragraph (g)(2)(ii)(A) of this section so that corporations that have not been members of the group for five years are not included. In such a case, references to the common parent in paragraph (g)(2)(ii)(A) of this section are to the former common parent. Thus, members of the group remaining in existence (including the new common parent) that have not been affiliated with the former common parent (or that have not been members of that group) for the five consecutive year period ending on the day that the determination is made are not included under paragraph (g)(2)(ii)(A) of this section. See, however, §1.1502–96(a)(2) for special rules relating to members (or loss subgroups) that have an ownership change within six months before, on, or after the time that the member becomes a member of the group.

(h) *Recognized built-in gain or loss*—(1) *In general*. [Reserved]

(2) *Disposition of stock or an intercompany obligation of a member*. Gain or loss recognized by a member on the disposition of stock (including stock described in section 1504(a)(4) and §1.382–2T(f)(18)(ii) and (iii)) of another member is treated as a recognized gain or loss for purposes of section 382(h)(2) (unless disallowed) even though gain or loss on such stock was not included in the determination of a net unrealized built-in gain or loss under paragraph (g)(1) of this section. Gain or loss recognized by a member with respect to an intercompany obligation is treated as recognized gain or loss only to the extent (if any) the transaction gives rise to aggregate income or loss within the consolidated group. The first sentence of this paragraph (h)(2) is applicable on or after September 17, 2008.

(3) *Intercompany transactions*. Gain or loss that is deferred under provisions such as section 267 and §1.1502–13 is

treated as recognized built-in gain or loss only to the extent taken into account by the group during the recognition period. See also § 1.1502–13(c)(7) *Example 10*.

(4) *Exchanged basis property*. If the adjusted basis of any asset is determined, directly or indirectly, in whole or in part, by reference to the adjusted basis of another asset held by the member at the beginning of the recognition period, the asset is treated, with appropriate adjustments, as held by the member at the beginning of the recognition period.

(i) [Reserved]

(j) *Predecessor and successor corporations*. A reference in this section and §§ 1.1502–92 through 1.1502–99 to a corporation, member, common parent, loss subgroup parent, or subsidiary includes, as the context may require, a reference to a predecessor or successor corporation as defined in § 1.1502–1(f)(4). For example, the determination whether a successor satisfies the continuous affiliation requirement of paragraph (d)(2)(i) or (g)(2)(ii) of this section is made by reference to its predecessor.

[T.D. 8824, 64 FR 36129, July 2, 1999, as amended by T.D. 9048, 68 FR 12291, Mar. 14, 2003; T.D. 9187, 70 FR 10326, Mar. 3, 2005; T.D. 9254, 71 FR 13018, Mar. 14, 2006; T.D. 9424, 73 FR 53984, Sept. 17, 2008]

§ 1.1502–92 Ownership change of a loss group or a loss subgroup.

(a) *Scope*. This section provides rules for determining if there is an ownership change for purposes of section 382 with respect to a loss group or a loss subgroup. See § 1.1502–94 for special rules for determining if there is an ownership change with respect to a new loss member and § 1.1502–96(b) for special rules for determining if there is an ownership change of a subsidiary.

(b) *Determination of an ownership change*—(1) *Parent change method*—(i) *Loss group*. A loss group has an ownership change if the loss group's common parent has an ownership change under section 382 and the regulations thereunder. Solely for purposes of determining whether the common parent has an ownership change—

(A) The losses described in § 1.1502–91(c) are treated as net operating losses (or a net unrealized built-in loss) of the common parent; and

(B) The common parent determines the earliest day that its testing period can begin by reference to only the attributes that make the group a loss group under § 1.1502–91(c).

(ii) *Loss subgroup*. A loss subgroup has an ownership change if the loss subgroup parent has an ownership change under section 382 and the regulations thereunder. The principles of § 1.1502–95(b) (relating to ceasing to be a member of a consolidated group) apply in determining whether the loss subgroup parent has an ownership change. Solely for purposes of determining whether the loss subgroup parent has an ownership change—

(A) The losses described in § 1.1502–91(d) are treated as net operating losses (or a net unrealized built-in loss) of the loss subgroup parent;

(B) The day that the members of the loss subgroup become members of the group (or a loss subgroup) is treated as a testing date within the meaning of § 1.382–2(a)(4); and

(C) The loss subgroup parent determines the earliest day that its testing period can begin under § 1.382–2T(d)(3) by reference to only the attributes that make the members a loss subgroup under § 1.1502–91(d).

(iii) *Special rule if election regarding section 1504(a)(1) relationship is made*—(A) *Ownership change of deemed loss subgroup parent is an ownership change of loss subgroup*. If the common parent makes an election under § 1.1502–91(d)(4), each of the members in the loss subgroup is treated as the loss subgroup parent for purposes of determining whether the loss subgroup has an ownership change under section 382 and the regulations thereunder on or after the day the members become members of the group.

(B) *Exception*. Paragraph (b)(1)(iii)(A) of this section does not apply to cause an ownership change of a loss subgroup if a deemed loss subgroup parent has an ownership change upon (or after) ceasing to be a member of the current group.

(2) *Examples*. The following examples illustrate the principles of this paragraph (b):

Example 1. Loss group—ownership change of the common parent. (i) A owns all the L stock. L owns 80 percent and B owns 20 percent of the L1 stock. For Year 1, the L group has a consolidated net operating loss that resulted from the operations of L1 and that is carried over to Year 2. The value of the L stock is $1000. The total value of the L1 stock is $600 and the value of the L1 stock held by B is $120. The L group is a loss group under §1.1502–91(c)(1) because it is entitled to use its net operating loss carryover from Year 1. On August 15, Year 2, A sells 51 percent of the L stock to C. The following is a graphic illustration of these facts:

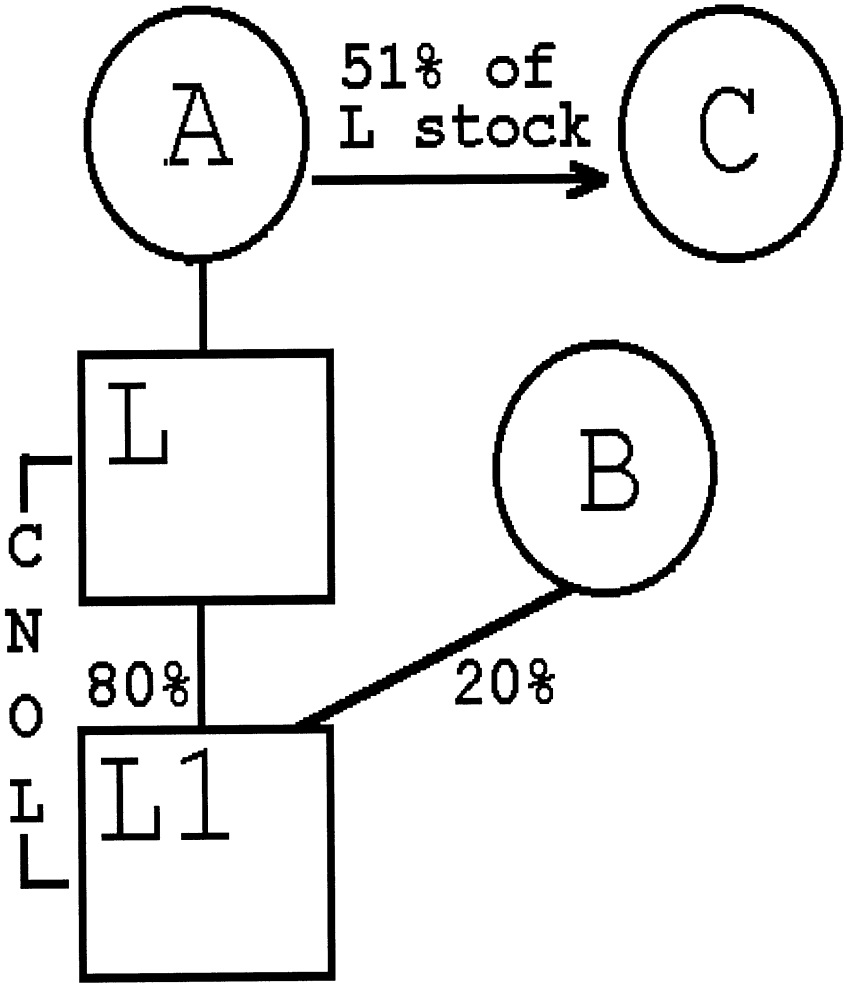

(ii) Under paragraph (b)(1)(i) of this section, section 382 and the regulations thereunder are applied to L to determine whether it (and therefore the L loss group) has an ownership change with respect to its net operating loss carryover from Year 1 attributable to L1 on August 15, Year 2. The sale of the L stock to C causes an ownership change of L under §1.382–2T and of the L loss group under paragraph (b)(1)(i) of this section. The amount of consolidated taxable income of the L loss group for any post-change

taxable year that may be offset by its pre-change consolidated attributes (that is, the net operating loss carryover from Year 1 attributable to L1) may not exceed the consolidated section 382 limitation for the L loss group for the taxable year.

Example 2. Loss group—owner shifts of subsidiaries disregarded. (i) The facts are the same as in *Example 1*, except that on August 15, Year 2, A sells only 49 percent of the L stock to C and, on December 12, Year 3, in an unrelated transaction, B sells the 20 percent of the L1 stock to D. A's sale of the L stock to C does not cause an ownership change of L under §1.382-2T nor of the L loss group under paragraph (b)(1)(i) of this section. The following is a graphic illustration of these facts:

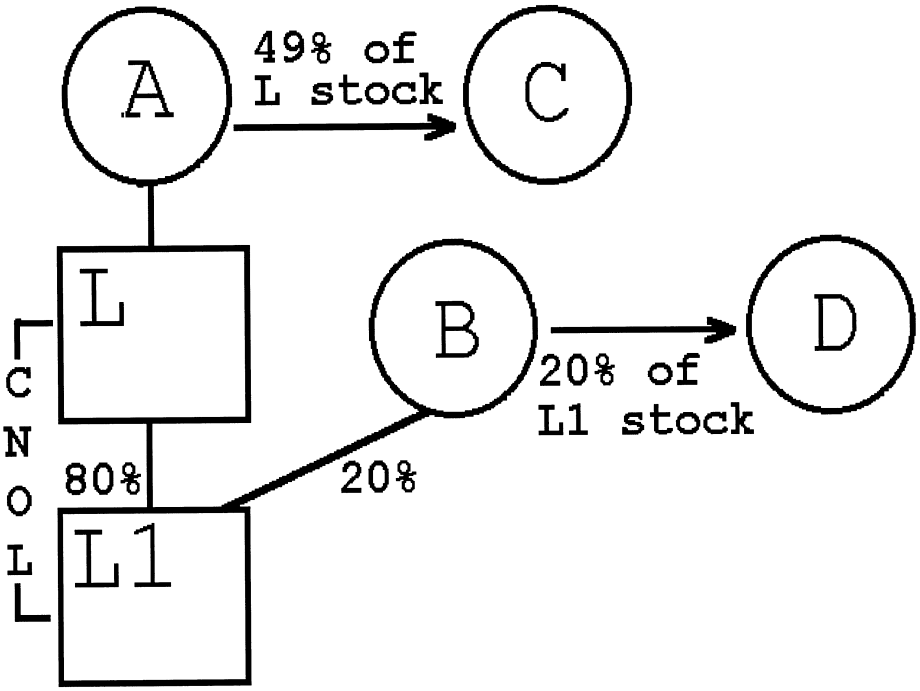

(ii) B's subsequent sale of L1 stock is not taken into account for purposes of determining whether the L loss group has an ownership change under paragraph (b)(1)(i) of this section, and, accordingly, there is no ownership change of the L loss group. See paragraph (c) of this section, however, for a supplemental ownership change method that would apply to cause an ownership change if the purchases by C and D were pursuant to a plan or arrangement and certain other conditions are satisfied.

Example 3. Loss subgroup—ownership change of loss subgroup parent controls. (i) P owns all the L stock. L owns 80 percent and A owns 20 percent of the L1 stock. The P group has a consolidated net operating loss arising in Year 1 that is carried over to Year 2. On September 9, Year 2, P sells 51 percent of the L stock to B, and L1 is apportioned a portion of the Year 1 consolidated net operating loss under §1.1502–21(b), which it carries over to its next taxable year. L and L1 file a consolidated return for their first taxable year ending after the sale to B. The following is a graphic illustration of these facts:

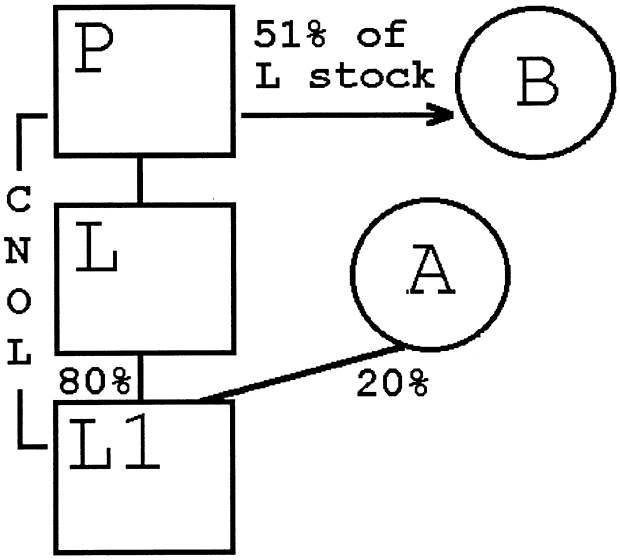

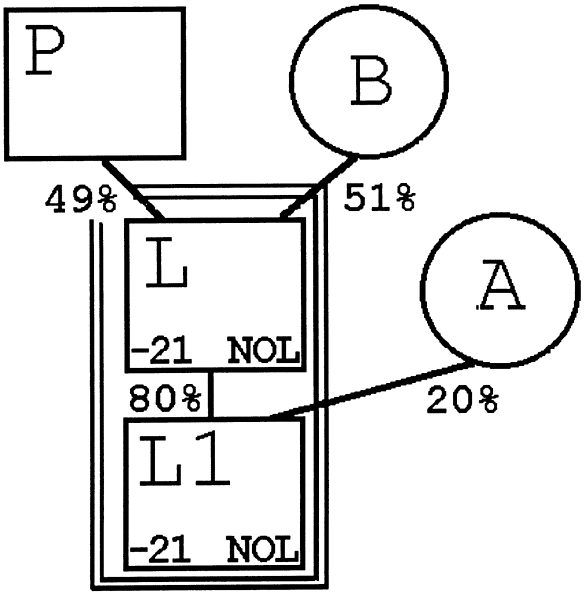

(ii) Under §1.1502–91(d)(1), L and L1 compose a loss subgroup on September 9, Year 2, the day that they become members of the L group. Under paragraph (b)(1)(ii) of this section, section 382 and the regulations thereunder are applied to L to determine whether it (and therefore the L loss subgroup) has an ownership change with respect to the portion

of the Year 1 consolidated net operating loss that is apportioned to L1 on September 9, Year 2. L has an ownership change resulting from P's sale of 51 percent of the L stock to A. Therefore, the L loss subgroup has an ownership change with respect to that loss.

Example 4. Loss group and loss subgroup—contemporaneous ownership changes. (i) A owns all the stock of corporation M, M owns 35 percent and B owns 65 percent of the L stock, and L owns all the L1 stock. The L group has a consolidated net operating loss arising in Year 1 that is carried over to Year 2. On May 19, Year 2, B sells 45 percent of the L stock to M for cash. M, L, and L1 thereafter file consolidated returns. L and L1 are each apportioned a portion of the Year 1 consolidated net operating loss, which they carry over to the M group's Year 2 and Year 3 consolidated return years. The M group has a consolidated net operating loss arising in Year 2 that is carried over to Year 3. On June 9, Year 3, A sells 70 percent of the M stock to C. The following is a graphic illustration of these facts:

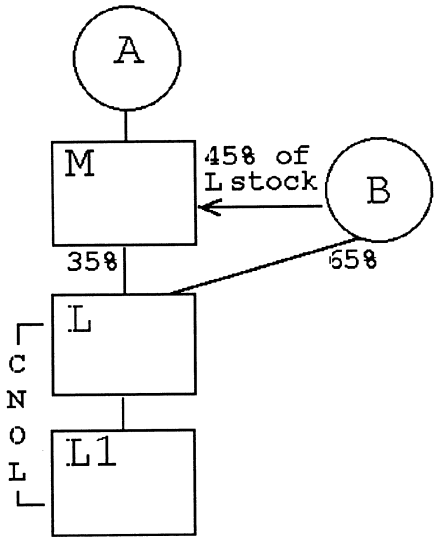

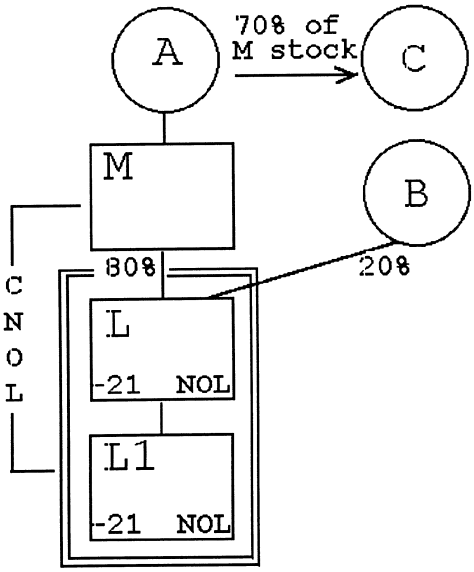

(ii) Under §1.1502–91(d)(1), L and L1 compose a loss subgroup on May 19, Year 2, the day they become members of the M group. Under paragraph (b)(1)(ii) of this section, section 382 and the regulations thereunder are applied to L to determine whether L (and therefore the L loss subgroup) has an ownership change with respect to the loss

carryovers from Year 1 on May 19, Year 2, a testing date because of B's sale of L stock to M. The sale of L stock to M results in only a 45 percentage point increase in A's ownership of L stock. Thus, there is no ownership change of L (or the L loss subgroup) with respect to those loss carryovers under paragraph (b)(1)(ii) of this section on that day.

(iii) June 9, Year 3, is also a testing date with respect to the L loss subgroup because of A's sale of M stock to C. The sale results in a 56 percentage point increase in C's ownership of L stock, and L has an ownership change. Therefore, the L loss subgroup has an ownership change on that day with respect to the loss carryovers from Year 1.

(iv) Paragraph (b)(1)(i) of this section requires that section 382 and the regulations thereunder be applied to M to determine whether M (and therefore the M loss group) has an ownership change with respect to the net operating loss carryover from Year 2 on June 9, Year 3, a testing date because of A's sale of M stock to C. The sale results in a 70 percentage point increase in C's ownership of M stock, and M has an ownership change. Therefore, the M loss group has an ownership change on that day with respect to that loss carryover.

Example 5. Deemed subgroup parent. (i) P owns all the stock of L and L1 and 80 percent of the stock of T. A owns the remaining 20 percent of the stock of T. L1 owns all the stock of L2. P1, which owns 60 percent of the stock of P, acquires, at the beginning of Year 2, the T, L, and L1 stock owned by P, and T, L, L1, and L2 become members of the P1 group. The P group has a consolidated net operating loss arising in Year 1 that is carried over to Year 2. L, L1, and L2 are each apportioned a portion of the Year 1 consolidated net operating loss under §1.1502–21(b), which they carry over to the P1 group's Year 2 and Year 3 consolidated return years. P1 makes the election described in §1.1502–91(d)(4) to treat T, L, L1 and L2 as meeting the section 1504(a)(1) requirement of §1.1502–91(d)(1)(ii). As a result of the election, T, L, L1 and L2 compose a loss subgroup and T, L, L1, and L2 are each treated as the loss subgroup parent for purposes of this paragraph (b). Because of P1's indirect ownership of T, L, L1, and L2 prior to P1's acquisition of the T, L, and L1 stock, P1's acquisition does not cause an ownership change of the loss subgroup.

(ii) On February 2, Year 3, L1 sells all of the stock of L2 to B. Although L2 is treated as a loss subgroup parent, the determination whether the loss subgroup comprised of T, L, and L1 has an ownership change under this paragraph (b) is made without regard to the sale of L2 because L2's ownership change occurred upon ceasing to be a member of the P1 group. See §1.1502–95(b) to determine the application of section 382 to L2 when L2 ceases to be a member of the P1 group and the T, L, L1 and L2 loss subgroup.

(iii) On March 26, Year 3, A sells her 20 percent minority stock interest in T to C . C's purchase, together with the 32 percentage point owner shift effected by P1's acquisition of the T stock at the beginning of Year 2, causes an ownership change of T, and therefore of the loss subgroup comprised of T, L, and L1.

(3) *Special adjustments*—(i) *Common parent succeeded by a new common parent.* For purposes of determining if a loss group has an ownership change, if the common parent of a loss group is succeeded or acquired by a new common parent and the loss group remains in existence, the new common parent is treated as a continuation of the former common parent with appropriate adjustments to take into account shifts in ownership of the former common parent during the testing period (including shifts that occur incident to the common parent's becoming the former common parent). A new common parent may be a continuation of the former common parent even if, under §1.1502–91(g)(2)(ii), the new common parent is not included in determining whether the group has a net unrealized built-in loss.

(ii) *Newly created loss subgroup parent.* For purposes of determining if a loss subgroup has an ownership change, if the member that is the loss subgroup parent has not been the loss subgroup parent for at least 3 years as of a testing date, appropriate adjustments must be made to take into account owner shifts of members of the loss subgroup so that the structure of the loss subgroup does not have the effect of avoiding an ownership change under section 382. (See paragraph (b)(3)(iii), *Example 3* of this section.)

(iii) *Examples.* The following examples illustrate the principles of this paragraph (b)(3):

Example 1. New common parent acquires old common parent. (i) A, who owns all the L stock, sells 30 percent of the L stock to B on August 26, Year 1. L owns all the L1 stock. The L group has a consolidated net operating loss arising in Year 1 that is carried over to Year 3. On July 16, Year 2, A and B transfer their L stock to a newly created holding company, HC, in exchange for 70 percent and 30 percent, respectively, of the HC stock. HC, L, and L1 thereafter file consolidated returns. Under the principles of §1.1502–75(d),

the L loss group is treated as remaining in existence, with HC taking the place of L as the new common parent of the loss group. The following is a graphic illustration of these facts:

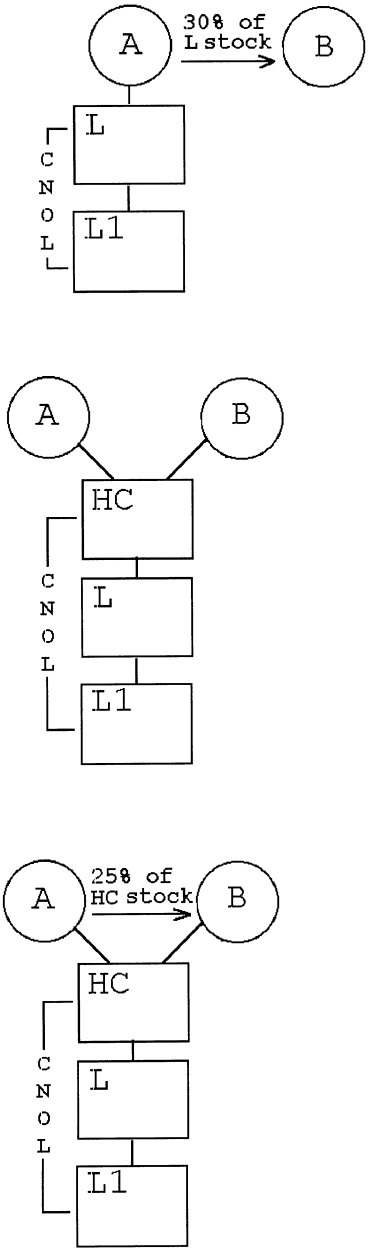

(ii) On November 11, Year 3, A sells 25 percent of the HC stock to B. For purposes of determining if the L loss group has an ownership change under paragraph (b)(1)(i) of this section on November 11, Year 3, HC is treated as a continuation of L under paragraph (b)(4)(i) of this section because it acquired L and became the common parent without terminating the L loss group. Accordingly, HC's testing period commences on January 1, Year 1, the first day of the taxable year of the L loss group in which the consolidated net operating loss that is carried over to Year 3 arose (see §1.382–2T(d)(3)(i)). Immediately after the close of November 11, Year 3, B's percentage ownership interest in the common parent of the loss group (HC) has increased by 55 percentage points over its lowest percentage ownership during the testing period (zero percent). Accordingly, HC and the L loss group have an ownership change on that day.

Example 2. New common parent in case in which common parent ceases to exist. (i) A, B, and C each own one-third of the L stock. L owns all the L1 stock. The L group has a consolidated net operating loss arising in Year 2 that is carried over to Year 3. On November 22, Year 3, L is merged into P, a corporation owned by D, and L1 thereafter files consolidated returns with P. A, B, and C, as a result of owning stock of L, own 90 percent of P's stock after the merger. D owns the remaining 10 percent of P's stock. The merger of L into P qualifies as a reverse acquisition of the L group under §1.1502–75(d)(3)(i), and the L loss group is treated as remaining in existence, with P taking the place of L as the new common parent of the L group. The following is a graphic illustration of these facts:

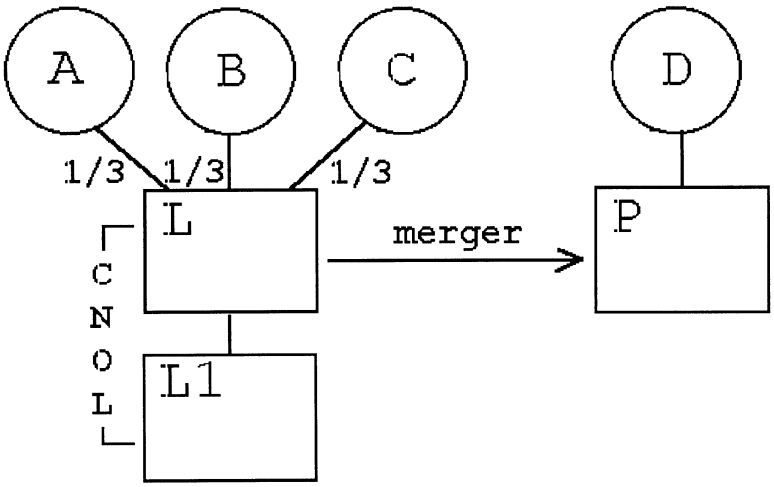

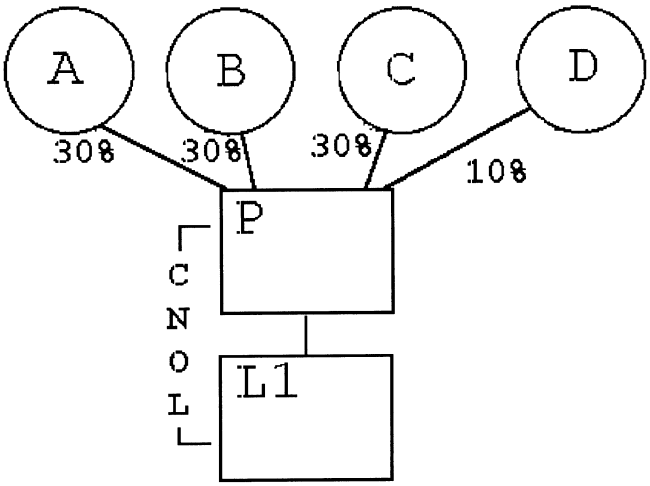

(ii) For purposes of determining if the L loss group has an ownership change on November 22, Year 3, the day of the merger, P is treated as a continuation of L so that the testing period for P begins on January 1, Year 2, the first day of the taxable year of the L loss group in which the consolidated net operating loss that is carried over to

Year 3 arose. Immediately after the close of November 22, Year 3, D is the only 5-percent shareholder that has increased his ownership interest in P during the testing period (from zero to 10 percentage points).

(iii) The facts are the same as in paragraph (i) of this *Example 2*, except that A has held 23⅓ shares (23⅓ percent) of L's stock for five years, and A purchased an additional 10 shares of L stock from E two years before the merger. Immediately after the close of the day of the merger (a testing date), A's ownership interest in P, the common parent of the L loss group, has increased by 6⅔ percentage points over A's lowest percentage ownership during the testing period (23⅓ percent to 30 percent).

(iv) The facts are the same as in (i) of this *Example 2*, except that P has a net operating loss arising in Year 1 that is carried to the first consolidated return year ending after the day of the merger. Solely for purposes of determining whether the L loss group has an ownership change under paragraph (b)(1)(i) of this section, the testing period for P commences on January 1, Year 2. P does not determine the earliest day for its testing period by reference to its net operating loss carryover from Year 1, which §§1.1502–1(f)(3) and 1.1502–75(d)(3)(i) treat as arising in a SRLY. See §1.1502–94 to determine the application of section 382 with respect to P's net operating loss carryover.

Example 3. Newly acquired loss subgroup parent. (i) P owns all the L stock and L owns all the L1 stock. The P group has a consolidated net operating loss arising in Year 1 that is carried over to Year 3. On January 19, Year 2, L issues a 20 percent stock interest to B. On February 5, Year 3, P contributes its L stock to a newly formed subsidiary, HC, in exchange for all the HC stock, and distributes the HC stock to its sole shareholder A. HC, L, and L1 thereafter file consolidated returns. A portion of the P group's Year 1 consolidated net operating loss is apportioned to L and L1 under §1.1502–21(b) and is carried over to the HC group's year ending after February 5, Year 3. HC, L, and L1 compose a loss subgroup within the meaning of §1.1502–91(d) with respect to the net operating loss carryovers from Year 1. The following is a graphic illustration of these facts:

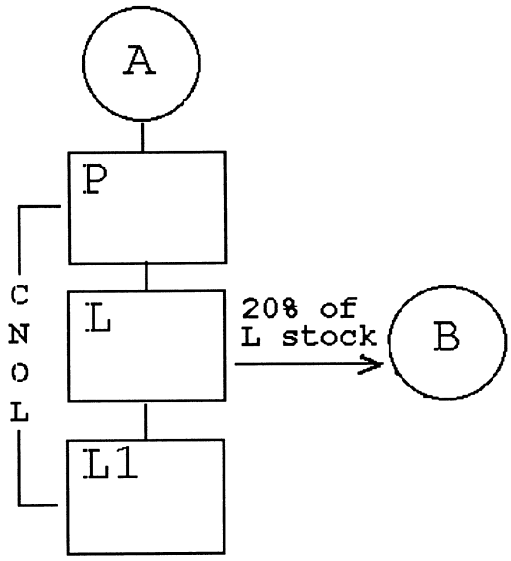

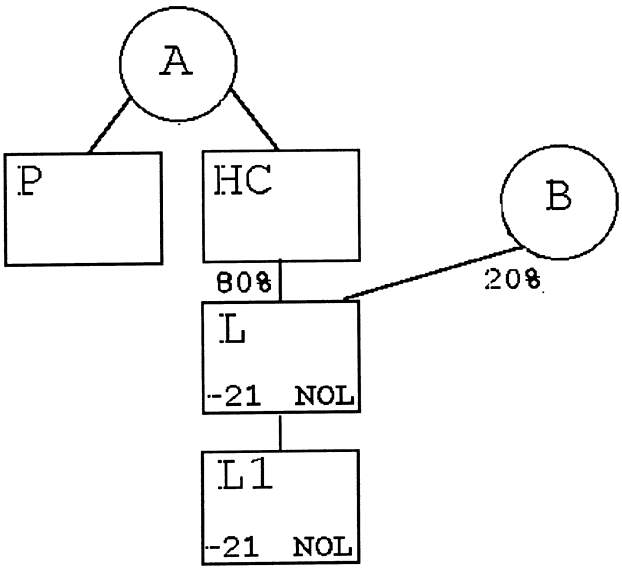

(ii) February 5, Year 3, is a testing date for HC as the loss subgroup parent with respect to the net operating loss carryovers of L and L1 from Year 1. See paragraph (b)(1)(ii)(B) of this section. For purposes of determining whether HC has an ownership change on the testing date, appropriate adjustments must be made with respect to the changes in the

percentage ownership of the stock of HC because HC was not the loss subgroup parent for at least 3 years prior to the day on which it became a member of the HC loss subgroup (a testing date). The appropriate adjustments include adjustments so that HC succeeds to the owner shifts of other members of the former group. Thus, HC succeeds to the owner shift of L that resulted from the sale of the 20 percent interest to B in determining whether the HC loss subgroup has an ownership change on February 5, Year 3, and on any subsequent testing date that includes January 19, Year 2.

(4) *End of separate tracking of certain losses.* If § 1.1502–96(a) (relating to the end of separate tracking of attributes) applies to a loss subgroup, then, while one or more members that were included in the loss subgroup remain members of the consolidated group, there is an ownership change with respect to their attributes described in § 1.1502–96(a)(2) only if the consolidated group is a loss group and has an ownership change under paragraph (b)(1)(i) of this section (or such a member has an ownership change under § 1.1502–96(b) (relating to ownership changes of subsidiaries)). If, however, the loss subgroup has had an ownership change before § 1.1502–96(a) applies, see § 1.1502–96(c) for the continuing application of the subgroup's section 382 limitation with respect to its pre-change subgroup attributes.

(c) *Supplemental rules for determining ownership change*—

(1) *Scope.* This paragraph (c) contains a supplemental rule for determining whether there is an ownership change of a loss group (or loss subgroup). It applies in addition to, and not instead of, the rules of paragraph (b) of this section. Thus, for example, if the common parent of the loss group has an ownership change under paragraph (b) of this section, the loss group has an ownership change even if, by applying this paragraph (c), the common parent would not have an ownership change. This paragraph (c) does not apply in determining an ownership change of a loss subgroup for which an election under § 1.1502–91(d)(4) is made.

(2) *Cause for applying supplemental rule.* This paragraph (c) applies to a loss group (or loss subgroup) if—

(i) Any 5-percent shareholder of the common parent (or loss subgroup parent) increases its percentage ownership interest in the stock of both—

(A) A subsidiary of the loss group (or loss subgroup) other than by a direct or indirect acquisition of stock of the common parent (or loss subgroup parent); and

(B) The common parent (or loss subgroup parent);

(ii) Those increases occur within a 3 year period ending on any day of a consolidated return year or, if shorter, the period beginning on the first day following the most recent ownership change of the loss group (or loss subgroup); and

(iii) Either—

(A) The common parent (or loss subgroup parent) has actual knowledge of the increase in the 5-percent shareholder's ownership interest in the stock of the subsidiary (or has actual knowledge of the plan or arrangement described in paragraph (c)(3)(i) of this section) before the date that the group's income tax return is filed for the taxable year that includes the date of that increase; or

(B) At any time during the period described in paragraph (c)(2)(ii) of this section, the 5-percent shareholder of the common parent is also a 5-percent shareholder of the subsidiary (determined without regard to paragraph (c)(3)(i) of this section) whose percentage increase in the ownership of the stock of the subsidiary would be taken into account in determining if the subsidiary has an ownership change (determined as if the subsidiary was a loss corporation and applying the principles of § 1.382–2T(k), including the principles relating to duty to inquire).

(3) *Operating rules.* Solely for purposes of this paragraph (c)—

(i) A 5-percent shareholder of the common parent (or loss subgroup parent) is treated as increasing its ownership interest in the stock of a subsidiary to the extent, if any, that another person or persons increases its percentage ownership interest in the stock of a subsidiary pursuant to a plan or arrangement under which the 5-percent shareholder increases its percentage ownership interest in the common parent (or loss subgroup parent);

(ii) The rules in section 382(l)(3) and §§ 1.382–2T(h) and 1.382–4(d) (relating to

constructive ownership) apply with respect to the stock of the subsidiary by treating such stock as stock of a loss corporation; and

(iii) In the case of a loss subgroup, a subsidiary includes any member of the loss subgroup other than the loss subgroup parent. (A loss subgroup parent is, however, a subsidiary of the loss group of which it is a member.)

(4) *Supplemental ownership change rules.* The determination whether the common parent (or loss subgroup parent) has an ownership change is made by applying paragraph (b)(1) of this section as modified by the following additional rules:

(i) *Additional testing dates for the common parent (or loss subgroup parent).* A testing date for the common parent (or loss subgroup parent) also includes—

(A) Each day on which there is an increase in the percentage ownership of stock of a subsidiary as described in paragraph (c)(2) of this section; and

(B) The first day of the first consolidated return year for which the group is a loss group (or the members compose a loss subgroup).

(ii) *Treatment of subsidiary stock as stock of the common parent (or loss subgroup parent).* The common parent (or loss subgroup parent) is treated as though it had issued to the person acquiring (or deemed to acquire) the subsidiary stock an amount of its own stock (by value) that equals the value of the subsidiary stock represented by the percentage increase in that person's ownership of the subsidiary (determined on a separate entity basis). Similar principles apply if the increase in percentage ownership interest is effected by a redemption or similar transaction.

(iii) *Different testing periods.* Stock treated as issued under paragraph (c)(4)(ii) of this section on a testing date is not treated as so issued for purposes of applying the ownership change rules of this paragraph (c) and paragraph (b)(1) of this section in a testing period that does not include that testing date.

(iv) *Disaffiliation of a subsidiary.* If a deemed issuance of stock under paragraph (c)(4)(ii) of this section would not cause the loss group (or loss subgroup) to have an ownership change before the day (if any) on which the subsidiary ceases to be a member of the loss group (or subgroup), then paragraph (c)(4) of this section shall not apply.

(v) *Subsidiary stock acquired first.* If an increase of subsidiary stock described in paragraph (c)(2)(i)(A) of this section occurs before the date that the 5-percent shareholder increases its percentage ownership interest in the stock of the common parent (or loss subgroup parent), then the deemed issuance of stock is treated as occurring on that later date, but in an amount equal to the value of the subsidiary stock on the date it was acquired.

(vi) *Anti-duplication rule.* If two or more 5-percent shareholders are treated as increasing their percentage ownership interests pursuant to the same plan or arrangement described in paragraph (c)(3)(i) of this section, appropriate adjustments must be made so that the amount of stock treated as issued is not taken into account more than once.

(5) *Examples.* The following examples illustrate the principles of this paragraph (c):

Example 1. Stock of the common parent under supplemental rules. (i) A owns all the L stock. L is not a member of an affiliated group and has a net operating loss carryover arising in Year 1 that is carried over to Year 6. On September 20, Year 6, L transfers all of its assets and liabilities to a newly created subsidiary, S, in exchange for S stock. L and S thereafter file consolidated returns. On November 23, Year 6, B contributes cash to L in exchange for a 45 percent ownership interest in L and contributes cash to S for a 20 percent ownership interest in S.

(ii) During the 3 year period ending on November 23, Year 6, B is a 5% shareholder of L and of S that increases its ownership interest in L and S during that period. Under paragraph (c)(4)(ii) of this section, the determination whether L (the common parent of a loss group) has an ownership change on November 23, Year 6 (or, subject to paragraph (c)(4)(iv) of this section, on any testing date in the testing period which includes November 23, Year 6), is made by applying paragraph (b)(1)(i) of this section and by treating the value of B's 20 percent ownership interest in S as if it were L stock issued to B. Because B is a 5% shareholder of both L and S during the 3 year period ending on November 23, Year 6, and B's increase in its percentage ownership in the stock of S would be taken into account in determining if S (if it were a loss corporation) had an ownership change,

it is not relevant whether L has actual knowledge of B's acquisition of S stock.

Example 2. Plan or arrangement—public offering of subsidiary stock. (i) A owns all the stock of L and L owns all the stock of L1. The L group has a consolidated net operating loss arising in Year 1 that resulted from the operations of L1 and that is carried over to Year 2. On October 7, Year 2, A sells 49 percent of the L stock to B. As part of a plan that includes the sale of L stock, A causes a public offering of L1 stock on November 6, Year 2. L has actual knowledge of the plan. The following is a graphic illustration of these facts:

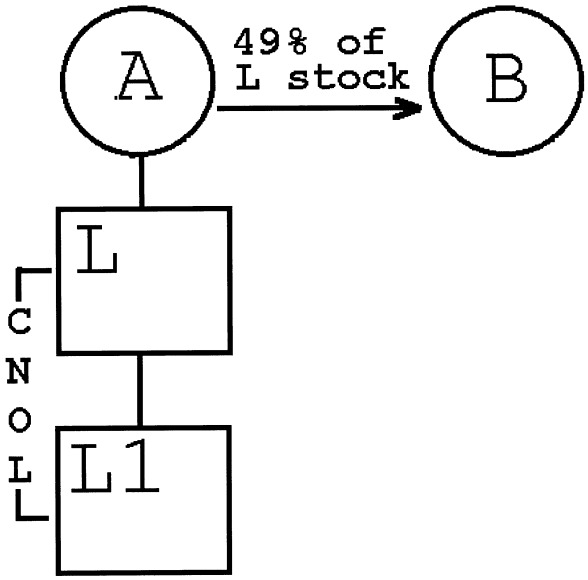

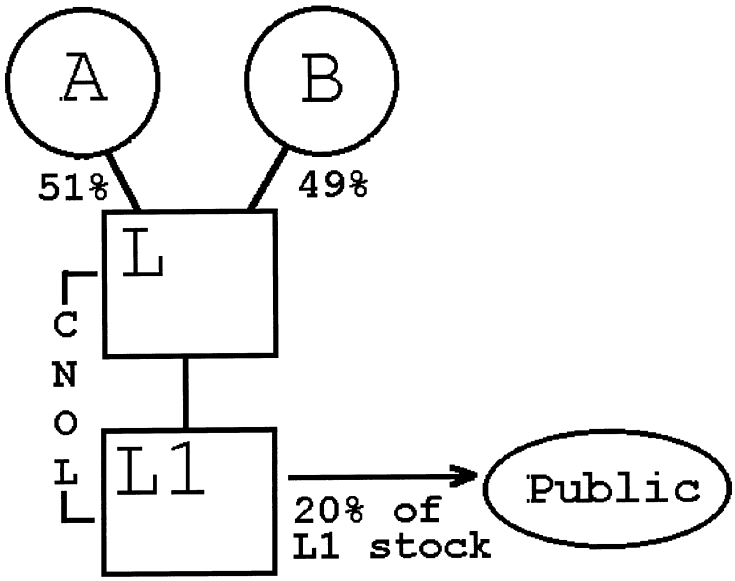

(ii) A's sale of the L stock to B does not cause an ownership change of the L loss group on October 7, Year 2, under the rules of §1.382–2T and paragraph (b)(1)(i) of this section.

(iii) Because the issuance of L1 stock to the public occurs as part of the same plan as

B's acquisition of L stock, and L has knowledge of the plan, paragraph (c)(4) of this section applies to determine whether the L loss group has an ownership change on November 6, Year 2 (or, subject to paragraph (c)(4)(iv) of this section, on any testing date for which the testing period includes November 6, Year 2).

(d) *Testing period following ownership change under this section.* If a loss group (or a loss subgroup) has had an ownership change under this section, the testing period for determining a subsequent ownership change with respect to pre-change consolidated attributes (or pre-change subgroup attributes) begins no earlier than the first day following the loss group's (or loss subgroup's) most recent change date.

(e) *Information statements*—(1) *Common parent of a loss group.* The common parent of a loss group must file the information statement required by §1.382–11(a) for a consolidated return year because of any owner shift, equity structure shift, or other transaction described in §1.382–2T(a)(2)(i)—

(i) With respect to the common parent and with respect to any subsidiary stock subject to paragraph (c) of this section; and

(ii) With respect to an ownership change described in §1.1502–96(b) (relating to ownership changes of subsidiaries).

(2) *Abbreviated statement with respect to loss subgroups.* The common parent of a consolidated group that has a loss subgroup during a consolidated return year must file the information statement required by §1.382–11(a) because of any owner shift, equity structure shift, or other transaction described in §1.382–2T(a)(2)(i) with respect to the loss subgroup parent and with respect to any subsidiary stock subject to paragraph (c) of this section. Instead of filing a separate statement for each loss subgroup parent, the common parent (which is treated as a loss corporation) may file the single statement described in paragraph (e)(1) of this section. In addition to the information concerning stock ownership of the common parent, the single statement must identify each loss subgroup parent and state which loss subgroups, if any, have had ownership changes during the consolidated return year. The loss subgroup parent is, however, still required to maintain the records necessary to determine if the loss subgroup has an ownership change. This paragraph (e)(2) applies with respect to the attributes of a loss subgroup until, under §1.1502–96(a), the attributes are no longer treated as described in §1.1502–91(d) (relating to the definition of loss subgroup). After that time, the information statement described in paragraph (e)(1) of this section must be filed with respect to those attributes.

[T.D. 8824, 64 FR 36137, July 2, 1999, as amended by T.D. 9264, 71 FR 30608, May 30, 2006; T.D. 9329, 72 FR 32807, June 14, 2007]

§1.1502–93 Consolidated section 382 limitation (or subgroup section 382 limitation).

(a) *Determination of the consolidated section 382 limitation (or subgroup section 382 limitation)*—(1) *In general.* Following an ownership change, the consolidated section 382 limitation (or subgroup section 382 limitation) for any post-change year is an amount equal to the value of the loss group (or loss subgroup), as defined in paragraph (b) of this section, multiplied by the long-term tax-exempt rate that applies with respect to the ownership change, and adjusted as required by section 382 and the regulations thereunder. See, for example, section 382(b)(2) (relating to the carryforward of unused section 382 limitation), section 382(b)(3)(B) (relating to the section 382 limitation for the post-change year that includes the change date), section 382(h) (relating to recognized built-in gains and section 338 gains), and section 382(m)(2) (relating to short taxable years). For special rules relating to the recognized built-in gains of a loss group (or loss subgroup), see paragraph (c)(2) of this section.

(2) *Coordination with apportionment rule.* For special rules relating to apportionment of a consolidated section 382 limitation (or a subgroup section 382 limitation) or net unrealized built-in gain when one or more corporations cease to be members of a loss group (or a loss subgroup) and to aggregation of amounts so apportioned, see §1.1502–95(c).

(b) *Value of the loss group (or loss subgroup)*—(1) *Stock value immediately before ownership change.* Subject to any adjustment under paragraph (b)(2) of

this section, the value of the loss group (or loss subgroup) is the value, immediately before the ownership change, of the stock of each member, other than stock that is owned directly or indirectly by another member. For this purpose—

(i) Ownership is determined under § 1.382–2T;

(ii) A member is considered to indirectly own stock of another member through a nonmember only if the member has a 5-percent or greater ownership interest in the nonmember; and

(iii) Stock includes stock described in section 1504(a)(4) and § 1.382–2T(f)(18)(ii) and (iii).

(2) *Adjustment to value*—(i) *In general.* The value of the loss group (or loss subgroup), as determined under paragraph (b)(1) of this section, is adjusted under any rule in section 382 or the regulations thereunder requiring an adjustment to such value for purposes of computing the amount of the section 382 limitation. See, for example, section 382(e)(2) (redemptions and corporate contractions), section 382(l)(1) (certain capital contributions) and section 382(l)(4) (ownership of substantial nonbusiness assets). For purposes of section 382(e)(2), redemptions and corporate contractions that do not effect a transfer of value outside of the loss group (or loss subgroup) are disregarded. For purposes of section 382(l)(1), capital contributions between members of the loss group (or loss subgroup) (or a contribution of stock to a member made solely to satisfy the loss subgroup parent requirement of paragraph (d)(1)(ii) or (2)(ii) of this section), are not taken into account. Also, the substantial nonbusiness asset test of section 382(l)(4) is applied on a group (or subgroup) basis, and is not applied separately to its members.

(ii) *Anti-duplication.* Appropriate adjustments must be made to the extent necessary to prevent any duplication of the value of the stock of a member, even though corporations that do not file consolidated returns may not be required to make such an adjustment. In making these adjustments, the group (or loss subgroup) may apply the principles of § 1.382–8 (relating to controlled groups of corporations) in determining the value of a loss group (or loss subgroup) even if that section would not apply if separate returns were filed. Also, the principles of § 1.382–5(d) (relating to successive ownership changes and absorption of a section 382 limitation) may apply to adjust the consolidated section 382 limitation (or subgroup section 382 limitation) of a loss group (or loss subgroup) to avoid a duplication of value if there are simultaneous (rather than successive) ownership changes.

(3) *Examples.* The following examples illustrate the principles of this paragraph (b):

Example 1. Basic case. (i) L, L1, and L2 compose a loss group. L has outstanding common stock, the value of which is $100. L1 has outstanding common stock and preferred stock that is described in section 1504(a)(4). L owns 90 percent of the L1 common stock, and A owns the remaining 10 percent of the L1 common stock plus all the preferred stock. The value of the L1 common stock is $40, and the value of the L1 preferred stock is $30. L2 has outstanding common stock, 50 percent of which is owned by L and 50 percent by L1. The L group has an ownership change. The following is a graphic illustration of these facts:

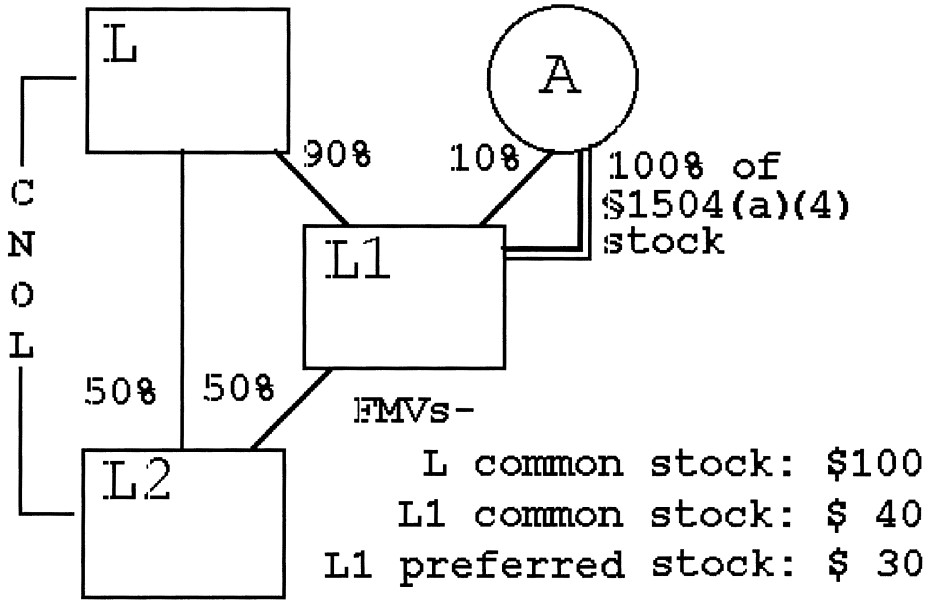

(ii) Under paragraph (b)(1) of this section, the L group does not include the value of the stock of any member that is owned directly or indirectly by another member in computing its consolidated section 382 limitation. Accordingly, the value of the stock of the loss group is $134, the sum of the value of—

(a) The common stock of L ($100);

(b) The 10 percent of the L1 common stock ($4) owned by A; and

(c) The L1 preferred stock ($30) owned by A.

Example 2. Indirect ownership. (i) L and L1 compose a consolidated group. L's stock has a value of $100. L owns 80 shares (worth $80) and corporation M owns 20 shares (worth $20) of the L1 stock. L also owns 79 percent of the stock of corporation M. The L group has an ownership change. The following is a graphic illustration of these facts:

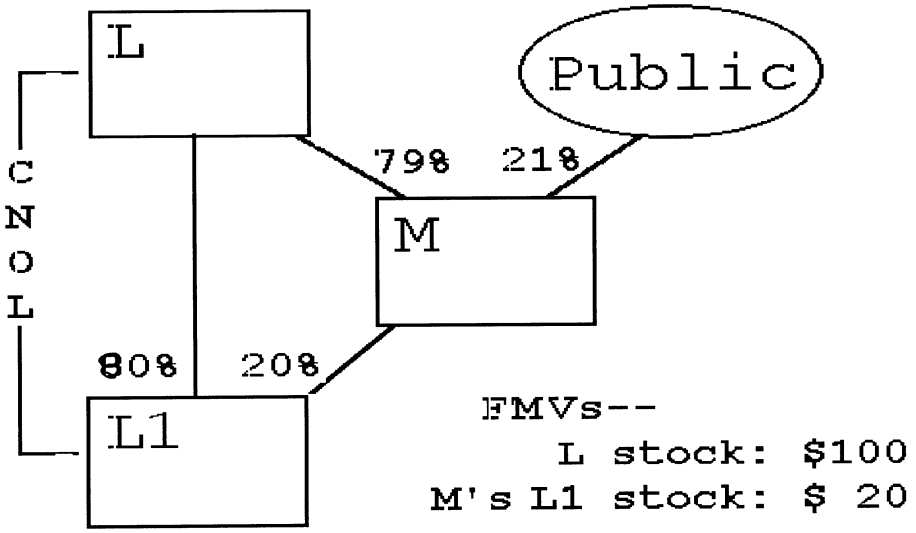

(ii) Under paragraph (b)(1) of this section, because of L's more than 5 percent ownership interest in M, a nonmember, L is considered to indirectly own 15.8 shares of the L1 stock held by M (79% × 20 shares). The value of the L loss group is $104.20, the sum of the values of—

(a) The L stock ($100); and

(b) The L1 stock not owned directly or indirectly by L (21% × $20, or $4.20).

(c) *Recognized built-in gain of a loss group or loss subgroup*—(1) *In general.* If a loss group (or loss subgroup) has a net unrealized built-in gain, any recognized built-in gain of the loss group (or loss subgroup) is taken into account under section 382(h) in determining the consolidated section 382 limitation (or subgroup section 382 limitation).

(2) *Adjustments.* Appropriate adjustments must be made so that any recognized built-in gain of a member that increases more than one section 382 limitation (whether consolidated, subgroup, or separate) does not effect a duplication in the amount of consolidated taxable income that can be offset by pre-change net operating losses. For example, a consolidated section 382 limitation that is increased by recognized built-in gains is reduced to the extent that pre-change net operating losses of a loss subgroup absorb additional consolidated taxable income because the same recognized built-in gains caused an increase in that loss subgroup's section 382 limitation. In addition, recognized built-in gain may not increase the amount of consolidated taxable income that can be offset by recognized built-in losses.

(d) *Continuity of business*—(1) *In general.* A loss group (or a loss subgroup) is treated as a single entity for purposes of determining whether it satisfies the continuity of business enterprise requirement of section 382(c)(1).

(2) *Example.* The following example illustrates the principle of this paragraph (d):

Example. Continuity of business enterprise. L owns all the stock of two subsidiaries, L1 and L2. The L group has an ownership change. It has pre-change consolidated attributes attributable to L2. Each of the members has historically conducted a separate line of business. Each line of business is approximately equal in value. One year after the ownership change, L discontinues its separate business and the business of L2. The separate business of L1 is continued for the remainder of the 2 year period following the ownership change. The continuity of business enterprise requirement of section 382(c)(1) is met even though the separate businesses of L and L2 are discontinued.

(e) *Limitations of losses under other rules.* If a section 382 limitation for a

post-change year exceeds the consolidated taxable income that may be offset by pre-change attributes for any reason, including the application of the limitation of § 1.1502–21(c), the amount of the excess is carried forward under section 382(b)(2) (relating to the carryforward of unused section 382 limitation).

[T.D. 8824, 64 FR 36153, July 2, 1999]

§ 1.1502–94 Coordination with section 382 and the regulations thereunder when a corporation becomes a member of a consolidated group.

(a) *Scope*—(1) *In general*. This section applies section 382 and the regulations thereunder to a corporation that is a new loss member of a consolidated group. A corporation is a new loss member if it—

(i) Carries over a net operating loss that arose (or is treated under § 1.1502–21(c) as arising) in a SRLY with respect to the current group, and that is not described in § 1.1502–91(d)(1); or

(ii) Has a net unrealized built-in loss (determined under paragraph (c) of this section immediately before it becomes a member of the current group by treating that day as a change date) that is not taken into account under § 1.1502–91(d)(2) in determining whether two or more corporations compose a loss subgroup.

(2) *Successor corporation as new loss member*. A new loss member also includes any successor to a corporation that has a net operating loss carryover arising in a SRLY and that is treated as remaining in existence under § 1.382–2(a)(1)(ii) following a transaction described in section 381(a).

(3) *Coordination in the case of a loss subgroup*. For rules regarding the determination of whether there is an ownership change of a loss subgroup with respect to a net operating loss or a net unrealized built-in loss described in § 1.1502–91(d) (relating to the definition of loss subgroup) and the computation of a subgroup section 382 limitation following such an ownership change, see §§ 1.1502–92 and 1.1502–93.

(4) *End of separate tracking of certain losses*. If § 1.1502–96(a) (relating to the end of separate tracking of attributes) applies to a new loss member, then, while that member remains a member of the consolidated group, there is an ownership change with respect to its attributes described in § 1.1502–96(a)(2) only if the consolidated group is a loss group and has an ownership change under § 1.1502–92(b)(1)(i) (or that member has an ownership change under § 1.1502–96(b) (relating to ownership changes of subsidiaries)). If, however, the new loss member has had an ownership change before § 1.1502–96(a) applies, see § 1.1502–96(c) for the continuing application of the section 382 limitation with respect to the member's pre-change losses.

(5) *Cross-reference*. See section 382(a) and § 1.1502–96(c) for the continuing effect of an ownership change after a corporation becomes or ceases to be a member.

(b) *Application of section 382 to a new loss member*—(1) *In general*. Section 382 and the regulations thereunder apply to a new loss member to determine, on a separate entity basis, whether and to what extent a section 382 limitation applies to limit the amount of consolidated taxable income that may be offset by the new loss member's pre-change separate attributes. For example, if an ownership change with respect to the new loss member occurs under section 382 and the regulations thereunder, the amount of consolidated taxable income for any post-change year that may be offset by the new loss member's pre-change separate attributes shall not exceed the section 382 limitation as determined separately under section 382(b) with respect to that member for such year. If the post-change year includes the change date, section 382(b)(3)(A) is applied so that the section 382 limitation of the new loss member does not apply to the portion of the taxable income for such year that is allocable to the period in such year on or before the change date. See generally § 1.382–6 (relating to the allocation of income and loss).

(2) *Adjustment to value*. Appropriate adjustments must be made to the extent necessary to prevent any duplication of the value of the stock of a member, even though corporations that do not file consolidated returns may not be required to make such an adjustment. For example, the principles of

§ 1.1502–93(b)(2)(ii) (relating to adjustments to value) apply in determining the value of a new loss member.

(3) *Pre-change separate attribute defined*. A pre-change separate attribute of a new loss member is—

(i) Any net operating loss carryover of the new loss member described in paragraph (a)(1) of this section; and

(ii) Any recognized built-in loss of the new loss member.

(4) *Examples*. The following examples illustrate the principles of this paragraph (b):

Example 1. Basic case. (i) A and P each own 50 percent of the L stock. On December 19, Year 6, P purchases 30 percent of the L stock from A for cash. L has net operating losses arising in Year 1 and Year 2 that it carries over to Year 6 and Year 7. The following is a graphic illustration of these facts:

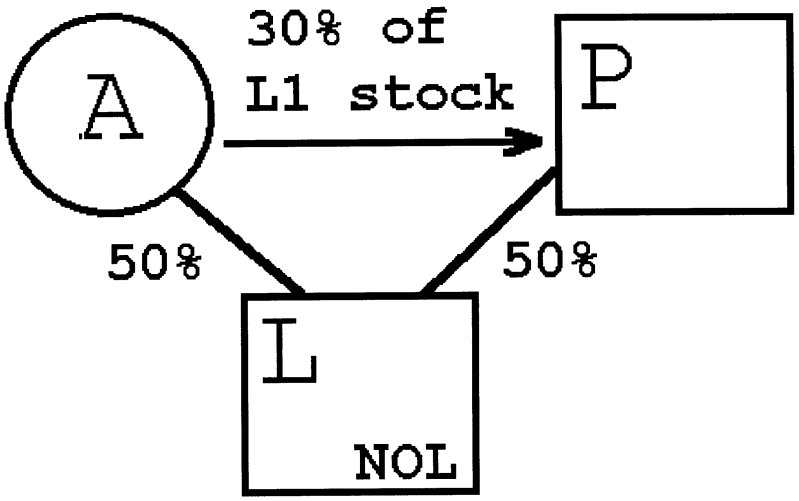

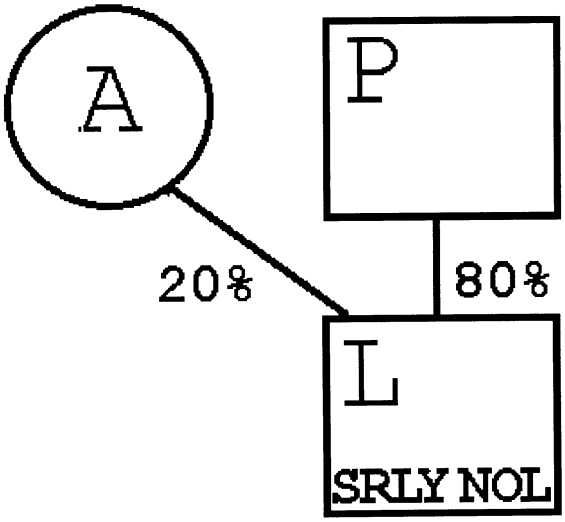

(ii) L is a new loss member because it has net operating loss carryovers that arose in a SRLY with respect to the P group and L is not a member of a loss subgroup under § 1.1502–91(d). Under section 382 and the regulations thereunder, L is a loss corporation on December 19, Year 6, that day is a testing

date for L, and the testing period for L commences on December 20, Year 3.

(iii) P's purchase of L stock does not cause an ownership change of L on December 19, Year 6, with respect to the net operating loss carryovers from Year 1 and Year 2 under section 382 and §1.382–2T. The use of the loss carryovers, however, is subject to limitation under §1.1502–21(c).

Example 2. Multiple new loss members. (i) The facts are the same as in *Example 1*, and, on December 31, Year 6, L purchases all the stock of L1 from B for cash. L1 has a net operating loss of $40 arising in Year 3 that it carries over to Year 7. The following is a graphic illustration of these facts:

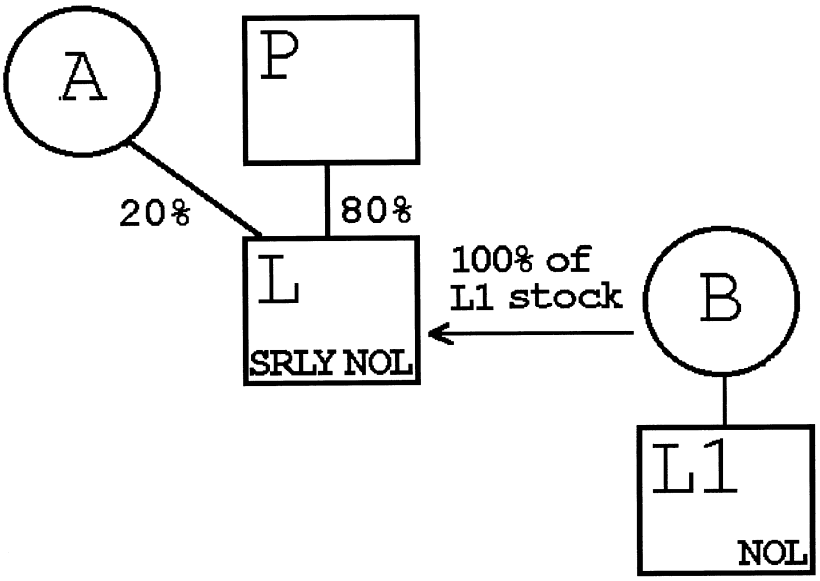

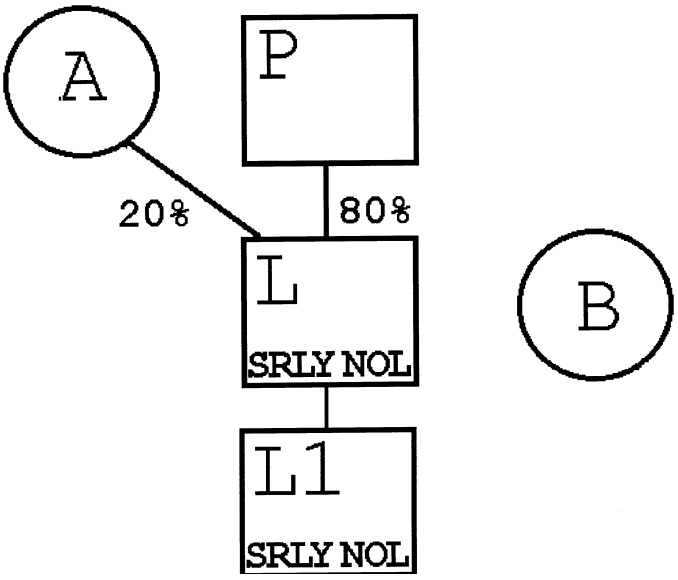

(ii) L1 is a new loss member because it has a net operating loss carryover from Year 3 that arose in a SRLY with respect to the P group and L1 is not a member of a loss subgroup under § 1.1502–91(d)(1).

(iii) L's purchase of all the stock of L1 causes an ownership change of L1 on December 31, Year 6, under section 382 and §1.382–2T. Accordingly, a section 382 limitation based on the value of the L1 stock immediately before the ownership change limits the amount of consolidated taxable income of the P group for any post-change year that may be offset by L1's loss from Year 3.

(iv) L1's ownership change upon becoming a member of the P group is an ownership change described in §1.1502–96(a). Thus, starting on January 1, Year 7, the P group no longer separately tracks owner shifts of the stock of L1 with respect to L1's loss from Year 3, and the P group is a loss group because L1's Year 3 loss is treated as a loss described in §1.1502–91(c).

Example 3. Ownership changes of new loss members. (i) The facts are the same as in Example 2, and, on July 30, Year 7, C purchases all the stock of P for cash.

(ii) L is a new loss member on July 30, Year 7, because its Year 1 and Year 2 losses arose in SRLYs with respect to the P group and it is not a member of a loss subgroup under §1.1502–91(d)(1). The testing period for L commences on August 1, Year 4. C's purchase of all the P stock causes an ownership change of L on July 30, Year 7, under section 382 and §1.382–2T with respect to its Year 1 and Year 2 losses. Accordingly, a section 382 limitation based on the value of the L stock immediately before the ownership change limits the amount of consolidated taxable income of the P group for any post-change year that may be offset by L's Year 1 and Year 2 losses. See §1.1502–21(c) for rules relating to an additional limitation.

(iii) The P group is a loss group on July 30, Year 7, because it is entitled to use L1's loss from Year 3, and such loss is no longer treated as a loss of a new loss member starting the day after L1's ownership change on December 31, Year 6. See §§1.1502–96(a) and 1.1502–91(c)(2). C's purchase of all the P stock causes an ownership change of P, and therefore the P loss group, on July 30, Year 7, with respect to L1's Year 3 loss. Accordingly, a consolidated section 382 limitation based on the value of the P stock immediately before the ownership change limits the amount of consolidated taxable income of the P group for any post-change year that may be offset by L1's Year 3 loss.

(c) *Built-in gains and losses.* As the context may require, the principles of §§1.1502–91(g) and (h) and 1.1502–93(c) (relating to built-in gains and losses) apply to a new loss member on a separate entity basis. See §1.1502–91(g)(4). See §1.1502–13 (including *Example 10* of §1.1502–13(c)(7)) for rules relating to the treatment of intercompany transactions.

(d) *Information statements.* The common parent of a consolidated group that has a new loss member subject to paragraph (b)(1) of this section during a consolidated return year must file the information statement required by §1.382–11(a) because of any owner shift, equity structure shift, or other transaction described in §1.382–2T(a)(2)(i). Instead of filing a separate statement for each new loss member, the common parent may file a single statement described in §1.382–11(a) with respect to the stock ownership of the common parent (which is treated as a loss corporation). In addition to the information concerning stock ownership of the common parent, the single statement must identify each new loss member and state which new loss members, if any, have had ownership changes during the consolidated return year. The new loss member is, however, required to maintain the records necessary to determine if it has an ownership change. This paragraph (d) applies with respect to the attributes of a new loss member until an event occurs which ends separate tracking under §1.1502–96(a). After that time, the information statement described in §1.1502–92(e)(1) must be filed with respect to these attributes.

[T.D. 8824, 64 FR 36155, July 2, 1999, as amended by T.D. 9264, 71 FR 30608, May 30, 2006; T.D. 9329, 72 FR 32807, June 14, 2007]

§ 1.1502–95 Rules on ceasing to be a member of a consolidated group (or loss subgroup).

(a) *In general*—(1) *Consolidated group.* This section provides rules for applying section 382 on or after the day that a member ceases to be a member of a consolidated group (or loss subgroup). The rules concern how to determine whether an ownership change occurs with respect to losses of the member, and how a consolidated section 382 limitation (or subgroup section 382 limitation) and a loss group's (or loss subgroup's) net unrealized built-in gain or loss is apportioned to the member. As the context requires, a reference in this section to a loss group, a member, or a corporation also includes a reference to a loss subgroup, and a reference to a consolidated section 382 limitation also

includes a reference to a subgroup section 382 limitation.

(2) *Election by common parent.* Only the common parent (not the loss subgroup parent) may make the election under paragraph (c) of this section to apportion a consolidated section 382 limitation (or subgroup section 382 limitation) or a loss group's (or loss subgroup's) net unrealized built-in gain.

(3) *Coordination with §§ 1.1502–91 through 1.1502–93.* For rules regarding the determination of whether there is an ownership change of a loss subgroup and the computation of a subgroup section 382 limitation following such an ownership change, see §§ 1.1502–91 through 1.1502–93.

(b) *Separate application of section 382 when a member leaves a consolidated group*—(1) *In general.* Except as provided in §§ 1.1502–91 through 1.1502–93 (relating to rules applicable to loss groups and loss subgroups), section 382 and the regulations thereunder apply to a corporation on a separate entity basis after it ceases to be a member of a consolidated group (or loss subgroup). Solely for purposes of determining whether a corporation has an ownership change—

(i) Any portion of a consolidated net operating loss that is apportioned to the corporation under § 1.1502–21(b) is treated as a net operating loss of the corporation beginning on the first day of the taxable year in which the loss arose;

(ii) The testing period may include the period during which (or before which) the corporation was a member of the group (or loss subgroup); and

(iii) Except to the extent provided in § 1.1502–96(d) (relating to reattributed losses), the day it ceases to be a member of a consolidated group is treated as a testing date of the corporation within the meaning of § 1.382–2(a)(4).

(2) *Effect of a prior ownership change of the group.* If a loss group has had an ownership change under § 1.1502–92 before a corporation ceases to be a member of a consolidated group (the former member)—

(i) Any pre-change consolidated attribute that is subject to a consolidated section 382 limitation continues to be treated as a pre-change loss with respect to the former member after it is apportioned to the former member and, if any net unrealized built-in loss is allocated to the former member under paragraph (e) of this section, any recognized built-in loss of the former member is a pre-change loss of the member;

(ii) The section 382 limitation with respect to such pre-change attribute is zero unless the common parent, under paragraph (c) of this section, apportions to the former member all or part of the consolidated section 382 limitation applicable to such attribute. The limitation applicable to a pre-change attribute other than a recognized built-in loss may be increased to the extent that the common parent has apportioned all or part of the loss group's net unrealized built-in gain to the former member, and the former member recognizes built-in gain during the recognition period;

(iii) The testing period for determining a subsequent ownership change with respect to such pre-change attribute (or such net unrealized built-in loss, if any) begins no earlier than the first day following the loss group's most recent change date; and

(iv) As generally provided under section 382, an ownership change of the former member that occurs on or after the day it ceases to be a member of a loss group may result in an additional, lesser limitation amount with respect to such losses.

(3) *Application in the case of a loss subgroup.* If two or more former members are included in the same loss subgroup immediately after they cease to be members of a consolidated group, the principles of paragraphs (b), (c) and (e) of this section apply to the loss subgroup. Therefore, for example, an apportionment by the common parent under paragraph (c) of this section is made to the loss subgroup rather than separately to its members. If the common parent of the consolidated group apportions all or part of a limitation (or net unrealized built-in gain) separately to one or more former members that are included in a loss subgroup because the common parent of the acquiring group makes an election under § 1.1502–91(d)(4) with respect to those members, the aggregate of those separate amounts is treated as the amount

apportioned to the loss subgroup. Such separate apportionment may occur, for example, because the election under §1.1502–91(d)(4) has not been filed at the time that the election of apportionment is made under paragraph (f) of this section.

(4) *Examples*. The following examples illustrate the principles of this paragraph (b):

Example 1. Treatment of departing member as a separate corporation throughout the testing period. (i) A owns all the L stock. L owns all the stock of L1 and L2. The L group has a consolidated net operating loss arising in Year 1 that is carried over to Year 3. On January 12, Year 2, A sells 30 percent of the L stock to B. On February 7, Year 3, L sells 40 percent of the L2 stock to C, and L2 ceases to be a member of the group. A portion of the Year 1 consolidated net operating loss is apportioned to L2 under §1.1502–21(b) and is carried to L2's first separate return year, which ends December 31, Year 3. The following is a graphic illustration of these facts:

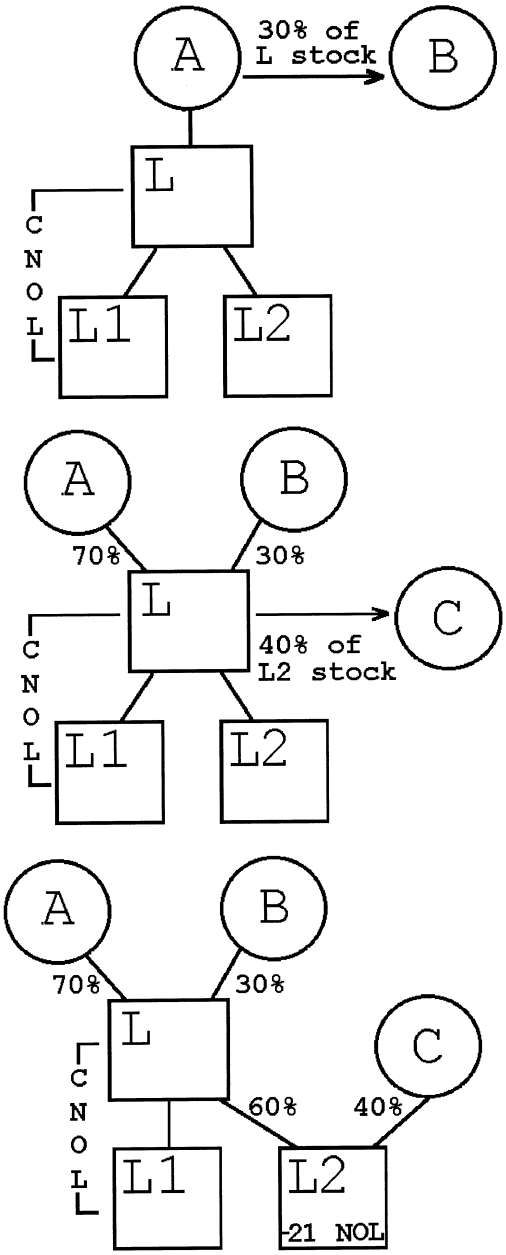

(ii) Under paragraph (b)(1) of this section, L2 is a loss corporation on February 7, Year 3. Under paragraph (b)(1)(iii) of this section, February 7, Year 3, is a testing date. Under paragraph (b)(1)(ii) of this section, the testing period for L2 with respect to this testing date commences on January 1, Year 1, the first day of the taxable year in which the

portion of the consolidated net operating loss apportioned to L2 arose. Therefore, in determining whether L2 has an ownership change on February 7, Year 3, B's purchase of 30 percent of the L stock and C's purchase of 40 percent of the L2 stock are each owner shifts. L2 has an ownership change under section 382(g) and §1.382–2T because B and C have increased their ownership interests in L2 by 18 and 40 percentage points, respectively, during the testing period.

Example 2. Effect of prior ownership change of loss group. (i) L owns all the L1 stock and L1 owns all the L2 stock. The L loss group had an ownership change under §1.1502–92 in Year 2 with respect to a consolidated net operating loss arising in Year 1 and carried over to Year 2 and Year 3. The consolidated section 382 limitation computed solely on the basis of the value of the stock of L is $100. On December 31, Year 2, L1 sells 25 percent of the stock of L2 to B. L2 is apportioned a portion of the Year 1 consolidated net operating loss which it carries over to its first separate return year ending after December 31, Year 2. L2's separate section 382 limitation with respect to this loss is zero unless L elects to apportion all or a part of the consolidated section 382 limitation to L2. (See paragraph (c) of this section for rules regarding the apportionment of a consolidated section 382 limitation.) L apportions $50 of the consolidated section 382 limitation to L2, and the remaining $50 of the consolidated section 382 limitation stays with the loss group composed of L and L1.

(ii) On December 31, Year 3, L1 sells its remaining 75 percent stock interest in L2 to C, resulting in an ownership change of L2. L2's section 382 limitation computed on the change date with respect to the value of its stock is $30. Accordingly, L2's section 382 limitation for post-change years ending after December 31, Year 3, with respect to its pre-change losses, including the consolidated net operating losses apportioned to it from the L group, is $30, adjusted for a short taxable year, carryforward of unused limitation, or any other adjustment required under section 382.

(c) *Apportionment of a consolidated section 382 limitation*—(1) *In general.* The common parent may elect to apportion all or any part of a consolidated section 382 limitation to a former member (or loss subgroup). The common parent also may elect to apportion all or any part of the loss group's net unrealized built-in gain to a former member (or loss subgroup).

(2) *Amount which may be apportioned*—(i) *Consolidated section 382 limitation.* The common parent may apportion all or part of each element of the consolidated section 382 limitation determined under §1.1502–93. For this purpose, the consolidated section 382 limitation consists of two elements—

(A) The value element, which is the element of the limitation determined under section 382(b)(1) (relating to value multiplied by the long-term tax-exempt rate) without regard to such adjustments as those described in section 382(b)(2) (relating to the carryforward of unused section 382 limitation), section 382(b)(3)(B)(relating to the section 382 limitation for the post-change year that includes the change date), section 382(h)(relating to built-in gains and section 338 gains), and section 382(m)(2)(relating to short taxable years); and

(B) The adjustment element, which is so much (if any) of the limitation for the taxable year during which the former member ceases to be a member of the consolidated group that is attributable to a carryover of unused limitation under section 382(b)(2) or to recognized built-in gains under 382(h).

(ii) *Net unrealized built-in gain.* The aggregate amount of the loss group's net unrealized built-in gain that may be apportioned to one or more former members that cease to be members during the same consolidated return year cannot exceed the loss group's excess, immediately after the close of that year, of net unrealized built-in gain over recognized built-in gain, determined under section 382(h)(1)(A)(ii) (relating to a limitation on recognized built-in gain). For this purpose, net unrealized built-in gain apportioned to former members in prior consolidated return years is treated as recognized built-in gain in those years.

(3) Effect of apportionment on the consolidated group—(i) Consolidated section 382 limitation. The value element of the consolidated section 382 limitation for any post-change year ending after the day that a former member (or loss subgroup) ceases to be a member(s) is reduced to the extent that it is apportioned under this paragraph (c). The consolidated section 382 limitation for the post-change year in which the former member (or loss subgroup) ceases to be a member(s) is also

reduced to the extent that the adjustment element for that year is apportioned under this paragraph (c).

(ii) *Net unrealized built-in gain*. The amount of the loss group's net unrealized built-in gain that is apportioned to the former member (or loss subgroup) is treated as recognized built-in gain for a prior taxable year ending in the recognition period for purposes of applying the limitation of section 382(h)(1)(A)(ii) to the loss group's recognition period taxable years beginning after the consolidated return year in which the former member (or loss subgroup) ceases to be a member.

(4) *Effect on corporations to which an apportionment is made*—(i) *Consolidated section 382 limitation*. The amount of the value element that is apportioned to a former member (or loss subgroup) is treated as the amount determined under section 382(b)(1) for purposes of determining the amount of that corporation's (or loss subgroup's) section 382 limitation for any taxable year ending after the former member (or loss subgroup) ceases to be a member(s). Appropriate adjustments must be made to the limitation based on the value element so apportioned for a short taxable year, carryforward of unused limitation, or any other adjustment required under section 382. The adjustment element apportioned to a former member (or loss subgroup) is treated as an adjustment under section 382(b)(2) or section 382(h), as appropriate, for the first taxable year after the member (or members) ceases to be a member (or members).

(ii) *Net unrealized built-in gain*. For purposes of determining the amount by which the former member's (or loss subgroup's) section 382 limitation for any taxable year beginning after the former member (or loss subgroup) ceases to be a member(s) is increased by its recognized built-in gain—

(A) The amount of net unrealized built-in gain apportioned to a former member (or loss subgroup) is treated as if it were an amount of net unrealized built-in gain determined under section 382(h)(1)(A)(i)(without regard to the threshold of section 382(h)(3)(B)) with respect to such member or loss subgroup, and that amount is not reduced under section 382(h)(1)(A)(ii) by the loss group's recognized built-in gain;

(B) The former member's (or loss subgroup's) 5 year recognition period begins on the loss group's change date;

(C) In applying section 382(h)(1)(A)(ii), the former member (or loss subgroup) takes into account only its prior taxable years that begin after it ceases to be a member of the loss group; and

(D) The former member's (or loss subgroup's) recognized built-in gain on the disposition of an asset is determined under section 382(h)(2)(A), treating references to the change date in that section as references to the loss group's change date.

(5) *Deemed apportionment when loss group terminates*. If a loss group terminates, to the extent the consolidated section 382 limitation or net unrealized built-in gain is not apportioned under paragraph (c)(1) of this section, the consolidated section 382 limitation or net unrealized built-in gain is deemed to be apportioned to the loss subgroup that includes the common parent, or, if there is no loss subgroup that includes the common parent immediately after the loss group terminates, to the common parent. A loss group terminates on the first day of the first taxable year that is a separate return year with respect to each member of the former loss group.

(6) *Appropriate adjustments when former member leaves during the year*. Appropriate adjustments are made to the consolidated section 382 limitation for the consolidated return year during which the former member (or loss subgroup) ceases to be a member(s) to reflect the inclusion of the former member in the loss group for a portion of that year.

(7) *Examples*. The following examples illustrate the principles of this paragraph (c):

Example 1. Consequence of apportionment. (i) L owns all the L1 stock and L1 owns all the L2 stock. The L group has a $200 consolidated net operating loss arising in Year 1 that is carried over to Year 2. At the close of December 31, Year 1, the group has an ownership change under §1.1502–92. The ownership change results in a consolidated section 382 limitation of $10 based on the value of the stock of the group. On August 29, Year 2, L1 sells 30 percent of the stock of L2 to A. L2 is

apportioned $90 of the group's $200 consolidated net operating loss under § 1.1502–21(b). L, the common parent, elects to apportion $6 of the consolidated section 382 limitation to L2. The following is a graphic illustration of these facts:

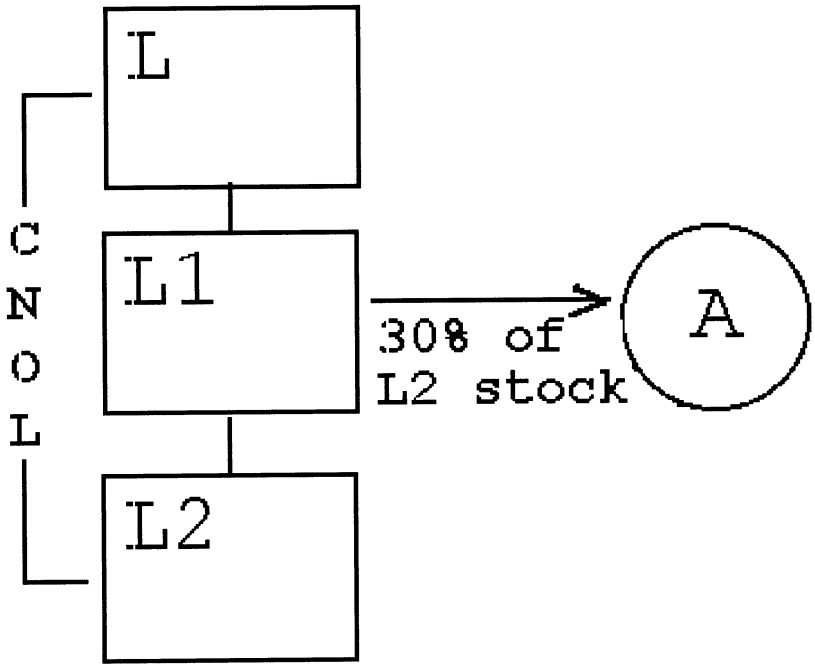

(ii) For its separate return years ending after December 31, Year 2, L2's section 382 limitation with respect to the $90 of the group's net operating loss apportioned to it is $6, adjusted, as appropriate, for any short taxable year, unused section 382 limitation, or other adjustment. For its consolidated return year ending December 31, Year 2 the L group's consolidated section 382 limitation with respect to the remaining $110 of pre-change consolidated attribute is $4 ($10 minus the $6 value element apportioned to L2), adjusted, as appropriate, for any short taxable year, unused section 382 limitation, or other adjustment.

(iii) For the L group's consolidated return year ending December 31, Year 2, the value element of its consolidated section 382 limitation is increased by $4 (rounded to the nearest dollar), to account for the period during which L2 was a member of the L group ($6, the consolidated section 382 limitation apportioned to L2, times 241/365, the ratio of the number of days during Year 2 that L2 is a member of the group to the number of days in the group's consolidated return year). See paragraph (c)(6) of this section. Therefore, the value element of the consolidated section 382 limitation for Year 2 of the L group is $8 (rounded to the nearest dollar).

(iv) The section 382 limitation for L2's short taxable year ending December 31, Year 2, is $2 (rounded to the nearest dollar), which is the amount that bears the same relationship to $6, the value element of the consolidated section 382 limitation apportioned to L2, as the number of days during that short taxable year, 124 days, bears to 365. See § 1.382–5(c).

Example 2. Consequence of no apportionment. The facts are the same as in *Example 1*, except that L does not elect to apportion any portion of the consolidated section 382 limitation to L2. For its separate return years ending after August 29, Year 2, L2's section 382 limitation with respect to the $90 of the group's pre-change consolidated attribute apportioned to L2 is zero under paragraph (b)(2)(ii) of this section. Thus, the $90 consolidated net operating loss apportioned to L2 cannot offset L2's taxable income in any of its separate return years ending after August 29, Year 2. For its consolidated return

years ending after August 29, Year 2, the L group's consolidated section 382 limitation with respect to the remaining $110 of pre-change consolidated attribute is $10, adjusted, as appropriate, for any short taxable year, unused section 382 limitation, or other adjustment.

Example 3. Apportionment of adjustment element. The facts are the same as in *Example 1,* except that L2 ceases to be a member of the L group on August 29, Year 3, and the L group has a $4 carryforward of an unused consolidated section 382 limitation (under section 382(b)(2)) to the Year 3 consolidated return year. The carryover of unused limitation increases the consolidated section 382 limitation for the Year 3 consolidated return year from $10 to $14. L may elect to apportion all or any portion of the $10 value element and all or any portion of the $4 adjustment element to L2.

(d) *Rules pertaining to ceasing to be a member of a loss subgroup*—(1) *In general.* A corporation ceases to be a member of a loss subgroup on the earlier of—

(i) The first day of the first taxable year for which it files a separate return; or

(ii) The first day that it ceases to bear a relationship described in section 1504(a)(1) to the loss subgroup parent (treating for this purpose the loss subgroup parent as the common parent described in section 1504(a)(1)(A)).

(2) *Exceptions.* Paragraph (d)(1)(ii) of this section does not apply to a member of a loss subgroup while that member remains a member of the current group—

(i) If an election under §1.1502–91(d)(4)(relating to treating the subgroup parent requirement as satisfied) applies to the members of the loss subgroup;

(ii) Starting on the day after the change date (but not earlier than the date the loss subgroup becomes a member of the group), if there is an ownership change of the loss subgroup within six months before, on, or after becoming members of the group; or

(iii) Starting the day after the period of 5 consecutive years following the day that the loss subgroup become members of the group during which the loss subgroup has not had an ownership change.

(3) *Examples.* The principles of this paragraph (d) are illustrated by the following examples:

Example 1. Basic case. (i) P owns all the L stock, L owns all the L1 stock and L1 owns all the L2 stock. The P group has a consolidated net operating loss arising in Year 1 that is carried over to Year 2. On December 11, Year 2, P sells all the stock of L to corporation M. Each of L, L1, and L2 is apportioned a portion of the Year 1 consolidated net operating loss, and thereafter each joins with M in filing consolidated returns. Under §1.1502–92, the L loss subgroup has an ownership change on December 11, Year 2. The L loss subgroup has a subgroup section 382 limitation of $100. The following is a graphic illustration of these facts:

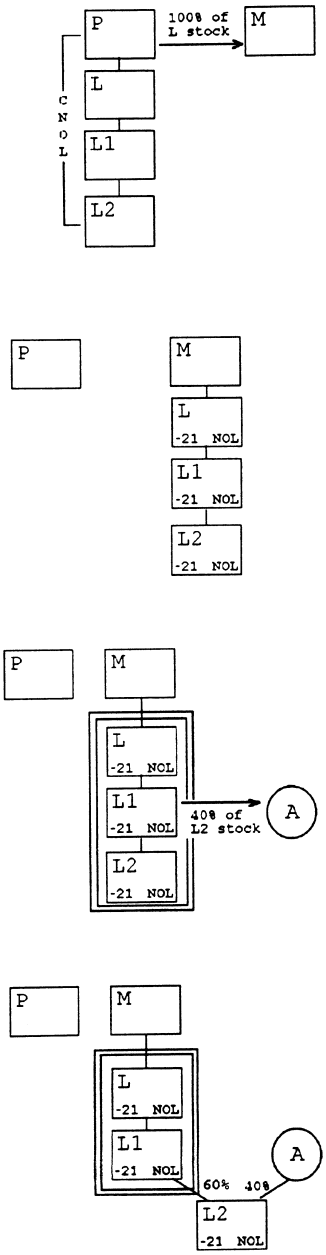

(ii) On May 22, Year 3, L1 sells 40 percent of the L2 stock to A. L2 carries over a portion of the P group's net operating loss from Year 1 to its separate return year ending December 31, Year 3. Under paragraph (d)(1) of this section, L2 ceases to be a member of the L loss subgroup on May 22, Year 3, which is both (1) the first day of the first taxable year

for which it files a separate return and (2) the day it ceases to bear a relationship described in section 1504(a)(1) to the loss subgroup parent, L. The net operating loss of L2 that is carried over from the P group is treated as a pre-change loss of L2 for its separate return years ending after May 22, Year 3. Under paragraphs (a)(2) and (b)(2) of this section, the separate section 382 limitation with respect to this loss is zero unless M elects to apportion all or a part of the subgroup section 382 limitation of the L loss subgroup to L2.

Example 2. Formation of a new loss subgroup. The facts are the same as in *Example 1*, except that A purchases 40 percent of the L1 stock from L rather than purchasing L2 stock from L1. L1 and L2 file a consolidated return for their first taxable year ending after May 22, Year 3, and each of L1 and L2 carries over a part of the net operating loss of the P group that arose in Year 1. Under paragraph (d)(1) of this section, L1 and L2 cease to be members of the L loss subgroup on May 22, Year 3. The net operating losses carried over from the P group are treated as pre-change subgroup attributes of the loss subgroup composed of L1 and L2. The subgroup section 382 limitation with respect to those losses is zero unless M elects to apportion all or part of the subgroup section 382 limitation of the L loss subgroup to the L1 loss subgroup. The following is a graphic illustration of these facts:

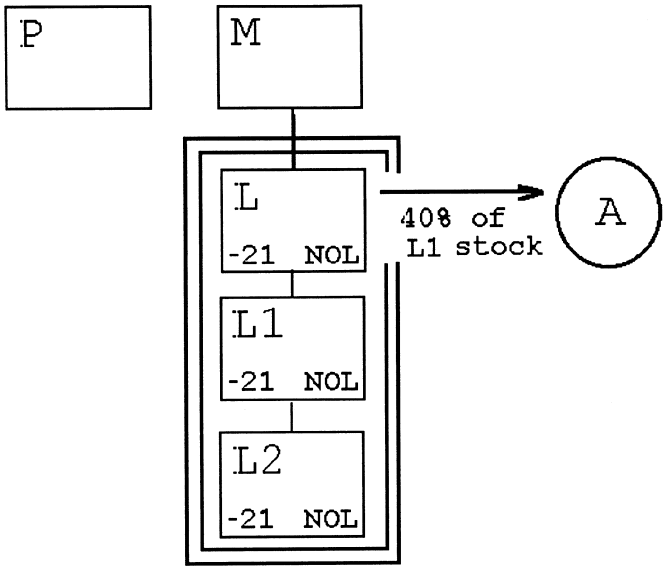

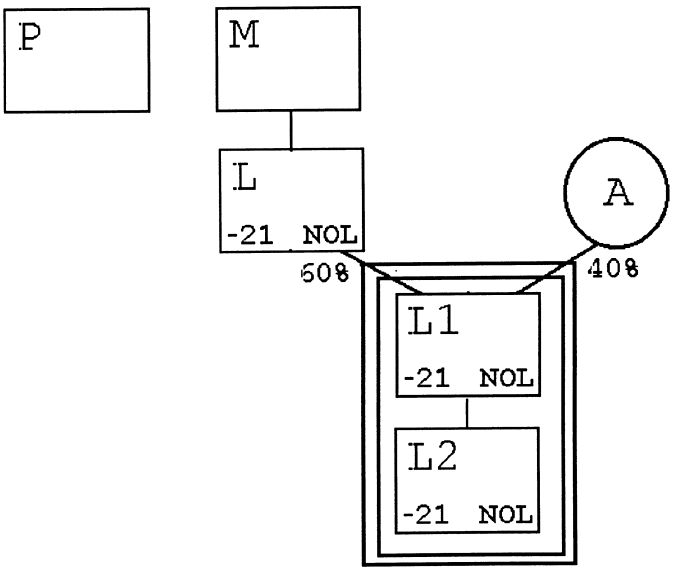

Example 3. Ownership change upon becoming members of the group. (i) A owns all the stock of P, and P owns all the stock of L1 and L2. The P group has a consolidated net operating loss arising in Year 1 that is carried over to Year 3 and Year 4. Corporation M acquires all the stock of P on November 11, Year 3, and P, L1, and L2 thereafter file consolidated

returns with M. M's acquisition results in an ownership change of the P loss subgroup under §1.1502–92(b)(1)(ii).

(ii) P distributes the L2 stock to M on October 7, Year 4, and L2 ceases to bear the relationship described in section 1504(a)(1) to P, the P loss subgroup parent. However, under paragraph (d)(2) of this section, L2 does not cease to be a member of the P loss subgroup because the P loss subgroup had an ownership change upon becoming members of the M group and L2 remains in the M group.

Example 4. Ceasing to bear a section 1504 (a)(1) to the loss subgroup parent. (i) A owns all the stock of P, and P owns all the stock of L1 and L2. The P group has a consolidated net operating loss arising in Year 1 that is carried over to Year 7. At the close of Year 2, X acquires all of the stock of P, causing an ownership change of the loss subgroup composed of P, L1 and L2 under §1.1502–92(b)(1)(ii). In Year 4, M, which is owned by the same person that owns X, acquires all of the stock of P, and the M acquisition does not cause a second ownership change of the P loss subgroup.

(ii) P distributes the L2 stock to M on February 3, Year 6 (less than 5 years after the P loss subgroup became members of the M group) and L2 ceases to bear the relationship described in section 1504(a)(1) to P, the loss subgroup parent. Thus, the section 382 limitation from the Year 2 ownership change that applies with respect to the pre-change attributes attributable to L2 is zero except to the extent M elects to apportion all or part of the P loss subgroup section 382 limitation to L2.

Example 5. Relationship through a successor. The facts are the same as in *Example 3,* except that M's acquisition of the P stock does not result in an ownership change of the P loss subgroup, and, instead of P's distributing the stock of L2, L2 merges into L1 on October 7, Year 4. L1 (as successor to L2 in the merger within the meaning of §1.1502–1(f)(4)) continues to bear a relationship described in section 1504(a)(1) to P, the loss subgroup parent. Thus, L2 does not cease to be a member of the P loss subgroup as a result of the merger.

Example 6. Reattribution of net operating loss carryover under §1.1502–36(d)(6). The facts are the same as in *Example 3,* except that, instead of distributing the L2 stock to M, P sells that stock to B, and, under §1.1502–36(d)(6), M reattributes $10 of L2's net operating loss carryover to itself. Under §1.1502–36(d)(6)(iv)(A), M succeeds to the reattributed loss as if the loss were succeeded to in a transaction to which section 381(a) applies. M, as successor to L2, does not cease to be a member of the P loss subgroup.

(e) *Allocation of net unrealized built-in loss*—(1) *In general.* This paragraph (e) provides rules for the allocation of a loss group's (or loss subgroup's) net unrealized built-in loss if a member ceases to be a member of a loss group (or loss subgroup). This paragraph (e) applies if—

(i) A loss group (or loss subgroup) has a net unrealized built-in loss on a change date; and

(ii) Immediately after the close of the consolidated return year in which the departing member ceases to be a member, the amount of the loss group's (or loss subgroup's) excess of net unrealized built-in loss over recognized built-in loss, determined under section 382(h)(1)(B)(ii) (relating to a limitation on recognized built-in loss), is greater than zero. (The amount of such excess is referred to as the remaining NUBIL balance.) In applying section 382(h)(1)(B)(ii) for this purpose, net unrealized built-in loss allocated to departing members in prior consolidated return years is treated as recognized built-in loss in those years.

(2) *Amount of allocation*—(i) *In general.* The amount of net unrealized built-in loss allocated to a departing member is equal to the remaining NUBIL balance, multiplied by a fraction. The numerator of the fraction is the amount of the built-in loss, taken into account on the change date under §1.1502–91(g), in the assets held by the departing member immediately after the member ceases to be a member of the loss group (or loss subgroup). The denominator of the fraction is the sum of the numerator, plus the amount of the built-in loss, taken into account under §1.1502–91(g) on the change date, in the assets held by the loss group (or loss subgroup) immediately after the close of the taxable year in which the departing member ceases to be a member. (Fluctuations in value of the assets between the change date and the date that the member ceases to be a member of the group (or loss subgroup), or the close of the taxable year in which the member ceases to be a member of the loss group, are disregarded.) Because the amount of built-in loss on the change date with respect to a departing member's assets is taken into account (rather than that member's separately computed net unrealized built-in loss

on the change date), a departing member can be apportioned all or part of the loss group's net unrealized built-in loss, even if the departing member had a separately computed net unrealized built-in gain on the change date. Amounts taken into account under section 382(h)(6)(C) (relating to certain deduction items) are treated as if they were assets in determining the numerator and denominator of the fraction.

(ii) *Transferred basis property and deferred gain or loss.* For purposes of paragraph (b)(2)(i) of this section, assets held by the departing member immediately after it ceases to be a member of the group (or by other members immediately after the close of the taxable year) include—

(A) Assets held at that time that are transferred basis property that was held by any member of the group (or loss subgroup) on the change date; and

(B) Assets held at that time by any member of the consolidated group with respect to which gain or loss of the group member or loss subgroup member at issue has been deferred in an intercompany transaction and has not been taken into account.

(iii) *Assets for which gain or loss has been recognized.* For purposes of paragraph (b)(2)(i) of this section, assets held by the departing member immediately after it ceases to be a member of the group (or by other members immediately after the close of the taxable year) do not include assets with respect to which gain or loss has previously been recognized and taken into account during the recognition period (including gain or loss recognized in an intercompany transaction and taken into account immediately before the member leaves the group). Appropriate adjustments must be made if gain or loss on an asset has been only partially recognized and taken into account.

(iv) *Exchanged basis property.* The rules of § 1.1502–91(h) apply for purposes of this paragraph (e) (disregarding stock received from the departing member or another member that is a member immediately after the close of the taxable year).

(v) *Two or more members depart during the same year.* If two or more members cease to be members during the same consolidated return year, appropriate adjustments must be made to the denominator of the fraction for each departing member by treating the other departing members as if they had not ceased to be members during that year and as if the assets held by those other departing members immediately after they cease to be members of the group (or loss subgroup) are assets held by the group immediately after the close of the taxable year.

(vi) *Anti-abuse rule.* If assets are transferred between members or a member ceases to be a member with a principal purpose of causing or affecting the allocation of amounts under this paragraph (e), appropriate adjustments must be made to eliminate any benefit of such acquisition, disposition, or allocation.

(3) *Effect of allocation on the consolidated group.* The amount of the net unrealized built-in loss that is allocated to the former member is treated as recognized built-in loss for a prior taxable year ending in the recognition period for purposes applying the limitation of section 382(h)(1)(B)(ii) to a loss group's (or loss subgroup's) recognition period taxable years beginning after the consolidated return year in which the former member ceases to be a member.

(4) *Effect on corporations to which the allocation is made.* For purposes of determining the amount of the former member's recognized built-in losses in any taxable year beginning after the former member ceases to be a member—

(i) The amount of the loss group's (or loss subgroup's) net unrealized built-in loss that is allocated to the former member is treated as if it were an amount of net unrealized built-in loss determined under section 382(h)(1)(B)(i)(without regard to the threshold of section 382(h)(3)(B)) with respect to such member or loss subgroup, and that amount is not reduced under section 382(h)(1)(B)(ii) by the loss group's (or loss subgroup's) recognized built-in losses;

(ii) The former member's 5 year recognition period begins on the loss group's (or loss subgroup's) change date;

(iii) In applying section 382(h)(1)(B)(ii), the former member

takes into account only its prior taxable years that begin after it ceases to be a member of the loss group (or loss subgroup); and

(iv) The former member's recognized built-in loss on the disposition of an asset is determined under section 382(h)(2)(B), treating references to the change date in that section as references to the loss group's (or loss subgroup's) change date.

(5) *Subgroup principles.* If two or more former members are members of the same consolidated group (the second group) immediately after they cease to be members of the current group, the principles of paragraphs (e)(1), (2) and (4) of this section apply to those former members on an aggregate basis. Thus, for example, the amount of net unrealized built-in loss allocated to those members is based on the assets held by those members immediately after they cease to be members of the current group and the limitation of section 382(h)(1)(B)(ii) on recognized built-in losses is applied by taking into account the aggregate amount of net unrealized built-in loss allocated to the former members and the aggregate recognized losses of those members in taxable years beginning after they cease to be members of the current group. If one or more of such members cease to be members of the second group, the principles of this paragraph (e) are applied with respect to those members to allocate to them all or part of any remaining unrecognized amount of net unrealized built-in loss allocated to the members that became members of the second group.

(6) *Apportionment of consolidated section 382 limitation (or subgroup section 382 limitation)*—(i) *In general.* For rules relating to the apportionment of a consolidated section 382 limitation (or subgroup section 382 limitation) to a former member, see paragraph (c) of this section.

(ii) *Special rule for former members that become members of the same consolidated group.* If recognized built-in losses of one or more former members would be subject to a consolidated section 382 limitation (or subgroup section 382 limitation) if recognized immediately before the member (or members) cease to be members of the group, an apportionment of that limitation may be made, under paragraph (c) of this section, to a loss subgroup that includes such member (or members), and the recognized built-in losses (if any) of that member (or members) will be subject to that apportioned limitation. If two or more of such former members are not included in a loss subgroup immediately after they cease to be members of the group (for example, because they do not have net operating loss carryovers or, in the aggregate, a net unrealized built-in loss), but are members of the same consolidated group, an apportionment of the consolidated section 382 limitation (or subgroup section 382 limitation) may be made to them as if they were a loss subgroup.

(7) *Examples.* The following examples illustrate the principles of this paragraph (e):

Example 1. Basic allocation case. (i) P owns all of the stock of L1 and L2. On September 4, Year 1, A purchases all of the P stock, causing an ownership change of the P group. On that date P has two assets (other than the L1 and L2 stock), asset 1 with an adjusted basis of $40 and a fair market value of $15 and asset 2 with an adjusted basis of $50 and a fair market value of $100. L1 has two assets, asset 3 , with a fair market value of $50 and an adjusted basis of $100, and asset 4, with an adjusted basis of $125 and a fair market value of $75. L2 has two assets, asset 5, with a fair market value of $150 and an adjusted basis of $100, and asset 6, with an adjusted basis of $90 and a fair market value of $40. Thus, the P loss group has a net unrealized built-in loss of $75.

(ii) On March 19, Year 3, P sells all of the L2 stock to M. At that time, asset 5, which has appreciated in value, has a fair market value of $250 and an adjusted basis of $100. Asset 6, which has declined in value, has an adjusted basis of $90 and a fair market value of $10.

(iii) On April 8, Year 3, P sells asset 1, and has a recognized built-in loss of $25 that is subject to the P group's section 382 limitation. On November 11, Year 4, L2 sells asset 6 for its then fair market value, $10, recognizing a loss of $80. On June 3, Year 5, L1 sells asset 4, recognizing a loss of $50.

(iv) Immediately after the close of Year 3, the P loss group's remaining NUBIL balance is $50 ($75 net unrealized built-in loss reduced by the $25 recognized built-in loss of P). The portion of the remaining NUBIL balance that is allocated to L2 is $17 (rounded to the nearest dollar). Seventeen dollars is the

product obtained by multiplying $50 (the remaining NUBIL balance) by $50/$150. The numerator of the fraction ($50) is the amount of built-in loss in asset 6, taken into account on the change date under § 1.1502–91(g). The denominator ($150) is the sum of the numerator ($50) and the amount of built-in loss in assets 3 and 4, taken into account on the change date under § 1.1502–91(g) ($100). The built-in loss in asset 1 is not included in the denominator of the fraction because it is not held by the P group immediately after the close of Year 3.

(v) Seventeen dollars of L2's $80 loss on the sale of asset 6 is a recognized built-in loss and subject to a section 382 limitation of zero, unless P apportions some or all of the P group's consolidated section 382 limitation to L2 (adjusted for a short taxable year, carryover of unused limitation, or any other adjustment required under section 382).

(vi) Thirty-three dollars of L1's $50 loss on the sale of asset 4 is subject to the P group's consolidated section 382 limitation, reduced by the amount of such limitation apportioned to L2, and adjusted for any short taxable year, a carryforward of unused limitation, or other adjustment. (In applying section 382(h)(1)(B)(ii) with respect to Year 5, the P group's net unrealized built-in loss is reduced by P's $25 recognized built-in loss in Year 3 and the $17 of net unrealized built-in loss allocated to L2, thus limiting the P group's recognized built-in loss in Year 5 to $33.)

Example 2. Two members depart in the same year. The facts are the same as in *Example 1*, except that P sells all of the stock of L1 to C on November 1, Year 3. The amount of net unrealized built-in loss apportioned to L2 (rounded to the nearest dollar) is $17 ($50 remaining NUBIL balance × $50/$150). The amount of net unrealized built-in loss apportioned to L1 (rounded to the nearest dollar) is $33 ($50 remaining NUBIL balance × $100/$150).

(8) *Reporting requirements*—(i) *Common Parent*. Except as provided in paragraph (e)(8)(iii) of this section, if a net unrealized built-in loss is allocated under paragraph (e) of this section, the common parent must include a statement entitled, ''STATEMENT OF NET UNREALIZED BUILT-IN LOSS ALLOCATION PURSUANT TO § 1.1502–95(e),'' on or with its income tax return for the taxable year in which the former member(s) (or a new loss subgroup that includes that member) ceases to be a member. The statement must include—

(A) The name and employer identification number of the departing member;

(B) The amount of the remaining NUBIL balance for the taxable year in which the member departs;

(C) The amount of the net unrealized built-in loss allocated to the departing member; and

(D) A representation that the common parent has delivered a copy of the statement to the former member (or the common parent of the group of which the former member is a member) on or before the day the group files its income tax return for the consolidated return year that the former member ceases to be a member.

(ii) *Former member*. Except as provided in paragraph (e)(8)(iii) of this section, the former member must include a statement on or with its first income tax return (or the first return in which the former member joins) that is filed after the close of the consolidated return year of the group of which the former member (or a new loss subgroup that includes that member) ceases to be a member. The statement will be identical to the statement filed by the common parent under paragraph (e)(8)(i) of this section except that instead of including the information described in paragraph (e)(8)(i)(A) of this section the former member must provide the name, employer identification number and tax year of the former common parent, and instead of the representation described in paragraph (e)(8)(i)(D) of this section the former member must represent that it has received and retained the copy of the statement delivered by the common parent as part of its records. See § 1.6001–1(e).

(iii) *Exception*. This paragraph (e)(8) does not apply if the required information (other than the amount of the remaining NUBIL balance) is included in a statement of election under paragraph (f) of this section (relating to apportioning a section 382 limitation).

(f) *Filing the election to apportion the section 382 limitation and net unrealized built-in gain*—(1) *Form of the election to apportion*—(i) *Statement*. An election under paragraph (c) of this section must be made in the form set forth in this paragraph (f)(1)(i). The election must be made by the common parent and the party described in paragraph (f)(2) of this section. It must be filed in

accordance with paragraph (f)(3) of this section and be entitled, ''THIS IS AN ELECTION UNDER §1.1502–95 TO APPORTION ALL OR PART OF THE [INSERT THE CONSOLIDATED SECTION 382 LIMITATION, THE SUBGROUP SECTION 382 LIMITATION, THE LOSS GROUP'S NET UNREALIZED BUILT-IN GAIN, OR THE LOSS SUBGROUP'S NET UNREALIZED BUILT-IN GAIN, AS APPROPRIATE] IN THE AMOUNT OF [INSERT THE AMOUNT OF THE LOSS LIMITATION OR NET UNREALIZED BUILT-IN GAIN] TO [INSERT NAME(S) AND EMPLOYER IDENTIFICATION NUMBER(S) OF THE CORPORATION (OR THE CORPORATIONS THAT COMPOSE A NEW LOSS SUBGROUP) TO WHICH ALLOCATION IS MADE].'' The statement must also indicate that an agreement, as described in paragraph (f)(1)(ii) of this section, has been entered into.

(ii) *Agreement*. Both the common parent and the party described in paragraph (f)(2) of this section must sign and date the agreement. The agreement must include, as appropriate—

(A) The date of the ownership change that resulted in the consolidated section 382 limitation (or subgroup section 382 limitation) or the loss group's (or loss subgroup's) net unrealized built-in gain;

(B) The amount of the departing member's (or loss subgroup's) pre-change net operating loss carryovers and the taxable years in which they arose that will be subject to the limitation that is being apportioned to that member (or loss subgroup);

(C) The amount of any net unrealized built-in loss allocated to the departing member (or loss subgroup) under paragraph (e) of this section, which, if recognized, can be a pre-change attribute subject to the limitation that is being apportioned;

(D) If a consolidated section 382 limitation (or subgroup section 382 limitation) is being apportioned, the amount of the consolidated section 382 limitation (or subgroup section 382 limitation) for the taxable year during which the former member (or new loss subgroup) ceases to be a member of the consolidated group (determined without regard to any apportionment under this section);

(E) If any net unrealized built-in gain is being apportioned, the amount of the loss group's (or loss subgroup's) net unrealized built-in gain (as determined under paragraph (c)(2)(ii) of this section) that may be apportioned to members that ceased to be members during the consolidated return year;

(F) The amount of the value element and adjustment element of the consolidated section 382 limitation (or subgroup section 382 limitation) that is apportioned to the former member (or new loss subgroup) pursuant to paragraph (c) of this section;

(G) The amount of the loss group's (or loss subgroup's) net unrealized built-in gain that is apportioned to the former member (or new loss subgroup) pursuant to paragraph (c) of this section;

(H) If the former member is allocated any net unrealized built-in loss under paragraph (e) of this section, the amount of any adjustment element apportioned to the former member that is attributable to recognized built-in gains (determined in a manner that will enable both the group and the former member to apply the principles of §1.1502–93(c)); and

(I) The name and employer identification number of the common parent making the apportionment.

(2) *Signing the agreement*. The agreement must be signed by both the common parent and the former member (or, in the case of a loss subgroup, the common parent and the loss subgroup parent) by persons authorized to sign their respective income tax returns. If the allocation is made to a loss subgroup for which an election under §1.1502–91(d)(4) is made, and not separately to its members, the agreement under this paragraph (f) must be signed by the common parent and any member of the new loss subgroup by persons authorized to sign their respective income tax returns. Each party signing the agreement must retain either the original or a copy of the agreement as part of its records. See §1.6001–1(e).

(3) *Filing of the election*—(i) *Filing by the common parent*. The election must be filed by the common parent of the group that is apportioning the consolidated section 382 limitation (or the subgroup section 382 limitation) or the

loss group's net unrealized built-in gain (or loss subgroup's net unrealized built-in gain) by including the statement on or with its income tax return for the taxable year in which the former member (or new loss subgroup) ceases to be a member.

(ii) *Filing by the former member*. An identical statement must be included on or with the first return of the former member (or the first return in which the former member, or the members of a new loss subgroup, join) that is filed after the close of the consolidated return year of the group of which the former member (or the members of a new loss subgroup) ceases to be a member.

(4) *Revocation of election*. An election statement made under paragraph (c) of this section is revocable only with the consent of the Commissioner.

(g) *Effective/applicability date*. Paragraphs (e)(8) and (f) of this section apply to any original consolidated Federal income tax return due (without extensions) after June 14, 2007. For original consolidated Federal income tax returns due (without extensions) after May 30, 2006, and on or before June 14, 2007, see § 1.1502–95T as contained in 26 CFR part 1 in effect on April 1, 2007. For original consolidated Federal income tax returns due (without extensions) on or before May 30, 2006, see § 1.1502–95 as contained in 26 CFR part 1 in effect on April 1, 2006.

[T.D. 8824, 64 FR 36159, July 2, 1999, as amended by T.D. 9264, 71 FR 30604, 30608, May 30, 2006; T.D. 9329, 72 FR 32805, 32807, June 14, 2007; T.D. 9424, 73 FR 53985, Sept. 17, 2008]

§ 1.1502–96 Miscellaneous rules.

(a) *End of separate tracking of losses*—(1) *Application*. This paragraph (a) applies to a member (or a loss subgroup) with a net operating loss carryover that arose (or is treated under § 1.1502–21(c) as arising) in a SRLY, or a member (or loss subgroup) with a net unrealized built-in loss determined at the time that the member (or loss subgroup) becomes a member of the consolidated group if there is—

(i) An ownership change of the member (or loss subgroup) within six months before, on, or after becoming a member of the group; or

(ii) A period of 5 consecutive years following the day that the member (or loss subgroup) becomes a member of a group during which the member (or loss subgroup) has not had an ownership change.

(2) *Effect of end of separate tracking*—(i) *Net operating loss carryovers*. If this paragraph (a) applies with respect to a member (or loss subgroup) with a net operating loss carryover, then, starting on the day after the earlier of the change date (but not earlier than the day the member (or loss subgroup) becomes a member of the consolidated group) or the last day of the 5 consecutive year period described in paragraph (a)(1)(ii) of this section, such loss carryover is treated as described in § 1.1502–91(c)(1)(i). The preceding sentence also applies for purposes of determining whether there is an ownership change with respect to such loss carryover following such change date or 5 consecutive year period. Thus, for example, starting the day after the change date (but not earlier than the day the member (or loss subgroup) becomes a member of the consolidated group) or the end of the 5 consecutive year period—

(A) The consolidated group which includes the new loss member or loss subgroup is no longer required to separately track owner shifts of the stock of the new loss member or subgroup parent to determine if an ownership change occurs with respect to the loss carryover of the new loss member or members included in the loss subgroup;

(B) The group is a loss group because the member's loss carryover is treated as a loss described in § 1.1502–91(c)(1)(i);

(C) There is an ownership change with respect to such loss carryover only if the group has an ownership change; and

(D) If the group has an ownership change, such loss carryover is a prechange consolidated attribute subject to the loss group's consolidated section 382 limitation.

(ii) *Net unrealized built-in losses*. If this paragraph (a) applies with respect to a new loss member described in § 1.1502–94(a)(1)(ii) (or a loss subgroup described in § 1.1502–91(d)(2)) then, starting on the day after the earlier of the change date (but not earlier than

the day the member (or loss subgroup) becomes a member of the group) or the last day of the 5 consecutive year period described in paragraph (a)(1)(ii) of this section, the member (or members of the loss subgroup) are treated, for purposes of applying § 1.1502–91(g)(2)(ii), as if they have been affiliated with the common parent for 5 consecutive years. Starting on that day, the member's (or the members of the loss subgroup's) separately computed net unrealized built-in loss is included in the determination whether the group has a net unrealized built-in loss, and there is an ownership change with respect to the member's separately computed net unrealized built-in loss only if the group (including the member) has a net unrealized built-in loss and has an ownership change. Thus, for example, starting the day after the change date (but not earlier than the day the member (or loss subgroup) becomes a member of the consolidated group), or the end of the 5 consecutive period

(A) The consolidated group which includes the new loss member or loss subgroup is no longer required to separately track owner shifts of the stock of the new loss member or subgroup parent to determine if an ownership change occurs with respect to the net unrealized built-in loss of the new loss member or members of the loss subgroup;

(B) The group includes the member's (or the loss subgroup members') separately computed net unrealized built-in loss in determining whether it is a loss group under § 1.1502–91(c)(1)(iii);

(C) There is an ownership change with respect to such net unrealized built-in loss only if the group is a loss group and has an ownership change; and

(D) If the group has an ownership change, the member's separately computed net unrealized built-in loss and its assets are taken into account in determining the group's pre-change consolidated attributes described in § 1.1502–91(e)(1) (relating to recognized built-in losses) that are subject to the group's consolidated section 382 limitation.

(iii) *Common parent not common parent for five years.* If the common parent has become the common parent of an existing group within the previous 5-year period in a transaction described in § 1.1502–75(d)(2)(ii) or (3), appropriate adjustments must be made in applying paragraphs (a)(2)(ii) and (3) of this section. In such a case, as the context requires, references to the common parent are to the former common parent.

(3) *Continuing effect of end of separate tracking*—(i) *In general.* As the context may require, a current group determines which of its members are included in a loss subgroup on any testing date by taking into account the application of this section in the former group. See the example in § 1.1502–91(f)(2). For this purpose, corporations that are treated under paragraph (a)(2)(ii) of this section as having been affiliated with the common parent of the former group for 5 consecutive years are also treated as having been affiliated with any other members that have been (or are treated as having been) affiliated with the common parent. The corporations are treated as having been affiliated with such other members for the same period of time that those members have been (or are treated as having been) affiliated with the common parent. If two or more corporations become members of the group at the same time, but paragraph (a)(1) of this section does not apply to every such corporation, then immediately after the corporations become members of the group, the corporations to which paragraph (a)(1) of this section applied are treated as not having been previously affiliated, for purposes of applying this paragraph (a)(3), with the corporations to which paragraph (a)(2)(ii) of this section did not apply.

(ii) *Example.* The following example illustrates the principles of this paragraph (a)(3):

Example. (i) L has owned all the stock of L1 for three years. At the close of December 31, Year 1, the M group purchases all the L stock, and L and L1 become members of the M group. Other than the stock of L1, L has one asset (the L loss asset) with a net unrealized built-in loss of $200 on this date. L1 has one asset with a net unrealized built-in gain of $50 (the L1 gain asset). L and L1 do not compose a loss subgroup because they do not meet the five year affiliation requirement of § 1.1502–91(d)(2)(i). L is a new loss member, and M's purchase of L causes an

ownership change of L. At the close of December 31, Year 4, at a time when L1 has been affiliated with the M group for three years and has been affiliated with L for six years, the S group purchases all the M stock. On this date, the L loss asset has a net unrealized built-in loss of $300, the L1 gain asset has a net unrealized built-in gain of $80, and M, the common parent of the M group, has one asset with a net unrealized built-in gain of $200.

(ii) Paragraph (a)(1) of this section applies to L because L is a new loss member described in §1.1502–94(a)(1)(ii) that has an ownership change upon becoming a member of the M group on December 31, Year 1. Accordingly, L is treated as having been affiliated with M for 5 consecutive years, and the L loss asset with a net unrealized built-in loss of $300 is included in the determination whether the M group has a net unrealized built-in loss.

(iii) The S group determines which of its members are included in a loss subgroup by taking into account application of paragraph (a) of this section in the M group. For this purpose, application of paragraph (a) of this section causes L to be treated as having been affiliated with M (or as having been a member of the M group) for 5 consecutive years as of January 1, Year 2. Therefore, the S group includes L in the determination whether the M subgroup acquired by S on December 31, Year 4, has a net unrealized built-in loss.

(iv) Because paragraph (a)(1) of this section applied to L when L became a member of the M group, but did not apply to L1, L is treated as not having been affiliated with L1 before L and L1 joined the M group. Also, L1 is not included in the determination whether the M subgroup has a net unrealized built-in loss because L1 has not been continuously affiliated with members of the M group for the five consecutive year period ending immediately before they become members of the S group. See §1.1502–91(g)(2).

(4) *Special rule for testing period.* For purposes of determining the beginning of the testing period for a loss group, the member's (or loss subgroup's) net operating loss carryovers (or net unrealized built-in loss) described in paragraph (a)(2) of this section are considered to arise—

(i) In a case described in paragraph (a)(1)(i) of this section, in a taxable year that begins not earlier than the later of the day following the change date or the day that the member becomes a member of the group; and

(ii) In a case described in paragraph (a)(1)(ii) of this section, in a taxable year that begins 3 years before the end of the 5 consecutive year period.

(5) *Limits on effects of end of separate tracking.* The rule contained in this paragraph (a) applies solely for purposes of §§1.1502–91 through 1.1502–95 and this section (other than paragraph (b)(2)(ii)(B) of this section (relating to the definition of pre-change attributes of a subsidiary)) and §1.1502–98, and not for purposes of other provisions of the consolidated return regulations. However, the rule contained in this paragraph (a) does apply in §§1.1502–15(g), 1.1502–21(g) and 1.1502–22(g) for purposes of determining the composition of loss subgroups defined in §1.1502–91(d). See also paragraph (c) of this section for the continuing effect of an ownership change with respect to pre-change attributes.

(b) *Ownership change of subsidiary*—(1) *Ownership change of a subsidiary because of options or plan or arrangement.* Notwithstanding §1.1502–92, a subsidiary may have an ownership change for purposes of section 382 with respect to its attributes which a group or loss subgroup includes in making a determination under §1.1502–91(c)(1) (relating to the definition of loss group) or §1.1502–91(d) (relating to the definition of loss subgroup). The subsidiary has such an ownership change if it has an ownership change under the principles of §1.1502–95(b) and section 382 and the regulations thereunder (determined on a separate entity basis by treating the subsidiary as not being a member of a consolidated group) in the event of—

(i) The deemed exercise under §1.382–4(d) of an option or options (other than an option with respect to stock of the common parent) held by a person (or persons acting pursuant to a plan or arrangement) to acquire more than 20 percent of the stock of the subsidiary; or

(ii) An increase by 1 or more 5-percent shareholders, acting pursuant to a plan or arrangement to avoid an ownership change of a subsidiary, in their percentage ownership interest in the subsidiary by more than 50 percentage points during the testing period of the subsidiary through the acquisition (or deemed acquisition pursuant to §1.382–4(d)) of ownership interests in the subsidiary and in higher-tier members with respect to the subsidiary.

(2) *Effect of the ownership change*—(i) *In general*. If a subsidiary has an ownership change under paragraph (b)(1) of this section, the amount of consolidated taxable income for any post-change year that may be offset by the pre-change losses of the subsidiary shall not exceed the section 382 limitation for the subsidiary. For purposes of this limitation, the value of the subsidiary is determined solely by reference to the value of the subsidiary's stock.

(ii) *Pre-change losses*. The pre-change losses of a subsidiary are—

(A) Its allocable part of any consolidated net operating loss which is attributable to it under §1.1502–21(b) (determined on the last day of the consolidated return year that includes the change date) that is not carried back and absorbed in a taxable year prior to the year including the change date;

(B) Its net operating loss carryovers that arose (or are treated under §1.1502–21(c) as having arisen) in a SRLY; and

(C) Its recognized built-in loss with respect to its separately computed net unrealized built-in loss, if any, determined on the change date.

(3) *Coordination with §§1.1502–91, 1.1502–92, and 1.1502–94*. If an increase in percentage ownership interest causes an ownership change with respect to an attribute under this paragraph (b) and under §1.1502–92 on the same day, the ownership change is considered to occur only under §1.1502–92 and not under this paragraph (b). See §1.1502–94 for anti-duplication rules relating to value.

(4) *Example*. The following example illustrates paragraph (b)(1)(ii) of this section:

Example. Plan to avoid an ownership change of a subsidiary. (i) L owns all the stock of L1, L1 owns all the stock of L2, L2 owns all the stock of L3, and L3 owns all the stock of L4. The L group has a consolidated net operating loss arising in Year 1 that is carried over to Year 2. L has assets other than its L1 stock with a value of $900. L1, L2, and L3 own no assets other than their L2, L3, and L4 stock. L4 has assets with a value of $100. During Year 2, A, B, C, and D, acting pursuant to a plan to avoid an ownership change of L4, acquire the following ownership interests in the members of the L loss group: (A) on September 11, Year 2, A acquires 20 percent of the L1 stock from L and B acquires 20 percent of the L2 stock from L1; and (B) on September 20, Year 2, C acquires 20 percent of the stock of L3 from L2 and D acquires 20 percent of the stock of L4 from L3.

(ii) The acquisitions by A, B, C, and D pursuant to the plan have increased their respective percentage ownership interests in L4 by approximately 10, 13, 16, and 20 percentage points, for a total of approximately 59 percentage points during the testing period. This more than 50 percentage point increase in the percentage ownership interest in L4 causes an ownership change of L4 under paragraph (b)(2) of this section.

(c) *Continuing effect of an ownership change*. A loss corporation (or loss subgroup) that is subject to a limitation under section 382 with respect to its pre-change losses continues to be subject to the limitation regardless of whether it becomes a member or ceases to be a member of a consolidated group. See §1.382–5(d) (relating to successive ownership changes and absorption of a section 382 limitation).

(d) *Losses reattributed under §1.1502–36(d)(6)*—(1) *In general*. This paragraph (d) contains rules relating to net operating carryovers, capital loss carryovers, and deferred deductions (collectively, loss or losses) that are reattributed to the common parent under §1.1502–36(d)(6). References in this paragraph (d) to a subsidiary are references to the subsidiary (or lower-tier subsidiary) whose loss is reattributed to the common parent.

(2) *Deemed section 381(a) transaction*. Under §1.1502–36(d)(6)(iv)(A), the common parent succeeds to the reattributed losses as if the losses were succeeded to in a transaction to which section 381(a) applies. In general, §§1.1502–91 through 1.1502–95, this section, and §1.1502–98 are applied to the reattributed losses in accordance with that characterization. See generally, §1.382–2(a)(1)(ii) (relating to distributor or transferor loss corporations in transactions under section 381), §1.1502–1(f)(4) (relating to the definition of predecessor and successor) and §1.1502–91(j) (relating to predecessor and successor corporations). For example, if the reattributed loss is a pre-change attribute subject to a section 382 limitation, it remains subject to that limitation following the reattribution. In certain cases, the limitation applicable

to the reattributed loss is zero unless the common parent apportions all or part of the limitation to itself. (See paragraph (d)(4) of this section.)

(3) *Rules relating to owner shifts*—(i) *In general*. Any owner shift of the subsidiary (including any deemed owner shift resulting from section 382(g)(4)(D) or 382(l)(3)) in connection with the disposition of the stock of the subsidiary is not taken into account in determining whether there is an ownership change with respect to the reattributed loss. However, any owner shift with respect to the successor corporation that is treated as continuing in existence under §1.382–2(a)(1)(ii) must be taken into account for such purpose if such owner shift is effected by the reattribution and an owner shift of the stock of the subsidiary not held directly or indirectly by the common parent would have been taken into account if such shift had occurred immediately before the reattribution. See paragraph (d)(3)(ii) *Example 2* of this section.

(ii) *Examples*. The following examples illustrate the principles of this paragraph (d)(3):

Example 1. No owner shift for reattributed loss. (i) *Facts*. P, the common parent of a consolidated group, owns 60% of the stock of L, and B owns the remaining 40%. L has a net operating loss carryover of $100 from year 1 that it carries over to years 2, 3, and 4. At the beginning of year 2, P purchases 40% of the L stock from B, which does not cause an ownership change of L. On December 31, year 3, P sells all of the L stock to M. Pursuant to §1.1502–36(d)(6), P reattributes $10 of L's $100 net operating loss carryover to itself, and L carries $90 of its net operating loss carryover to its year 4.

(ii) *Analysis*. The sale of the L stock to M does not cause an owner shift that is taken into account in determining if there is an ownership change with respect to the $10 reattributed loss. Following the reattribution, §1.1502–94(b) continues to apply to determine if there is an ownership change with respect to the $10 reattributed loss, until, under paragraph (a) of this section, the loss is treated as described in §1.1502–91(c)(1)(i). In applying §1.1502–94(b), the 40 percentage point increase by the P shareholders prior to the reattribution is taken into account. The sale of the L stock to M does cause an ownership change of L with respect to the $90 of its net operating loss that it carries over to year 4.

Example 2. Owner shift for reattributed loss. The facts are the same as in *Example 1*, except that P only purchases 20% of the L stock from B and sells 80% of the L stock to M. L is a new loss member, and, under §1.1502–94(b)(1), an owner shift of the stock of L not held directly or indirectly by the common parent (the 20% of L stock still held by B) would have been taken into account if such shift had occurred immediately before the reattribution. Following the reattribution, §1.1502–94(b) continues to apply to determine if there is an ownership change with respect to the $10 reattributed loss, until, under paragraph (a) of this section, the loss is treated as described in §1.1502–91(c)(1)(i). With respect to the $10 reattributed loss, the P shareholders have increased their percentage ownership interest by 40 percentage points. The P shareholders have increased their ownership interests by 20 percentage points as a result of P's purchase of stock from B, and, under §1.382–2(a)(1)(ii), are treated as increasing their interests by an additional 20 percentage points as a result of the reattribution. (The acquisition of the L stock by M does not, however, effect an owner shift for the $10 of reattributed loss.) The sale of the L stock to M causes an ownership change of L with respect to the $90 of net operating loss that L carries over to Year 4.

(4) *Rules relating to the section 382 limitation*—(i) *Reattributed loss is a pre-change separate attribute of a new loss member*. If the reattributed loss is a pre-change separate attribute of a new loss member that is subject to a separate section 382 limitation prior to the disposition of subsidiary stock, the common parent's limitation with respect to that loss is zero, except to the extent that the common parent apportions to itself, under paragraph (d)(5) of this section, all or part of such limitation. A separate section 382 limitation is the limitation described in §1.1502–94(b) that applies to a pre-change separate attribute.

(ii) *Reattributed loss is a pre-change subgroup attribute*. If the reattributed loss is a pre-change subgroup attribute subject to a subgroup section 382 limitation prior to the disposition of subsidiary stock, and, immediately after the reattribution, the common parent is not a member of the loss subgroup, the section 382 limitation with respect to that loss is zero, except to the extent that the common parent apportions to itself, under paragraph (d)(5) of this section, all or part of the subgroup section 382 limitation. See, however,

§ 1.1502–95(d)(3) *Example 6*, for an illustration of a case where the common parent, as successor to the subsidiary, is a member of the loss subgroup immediately after the reattribution.

(iii) *Potential application of section 382(l)(1)*. In general, the value of the stock of the common parent is used to determine the section 382 limitation for an ownership change with respect to the reattributed loss that occurs at the time of, or after, the reattribution. For example, if the loss is a pre-change consolidated attribute, the value of the stock of the common parent is used to determine the section 382 limitation, and no adjustment to that value is required because of the deemed section 381(a) transaction. However, if the loss is a pre-change separate attribute of a new loss member (or is a pre-change attribute of a loss subgroup member and the common parent was not the loss subgroup parent immediately before the reattribution), the deemed section 381(a) transaction is considered to constitute a capital contribution with respect to the new loss member (or loss subgroup member) for purposes of section 382(l)(1). Accordingly, if that section applies because the deemed capital contribution is (or is considered under section 382(l)(1)(B) to be) part of a plan described in section 382(l)(1)(A), the value of the stock of the common parent after the deemed section 381(a) transaction must be adjusted to reflect the capital contribution. Ordinarily, this will require the value of the stock of the common parent to be reduced to an amount that represents the value of the stock of the subsidiary (or loss subgroup of which the subsidiary was a member) when the reattribution occurred.

(iv) *Duplication or omission of value*. In determining any section 382 limitation with respect to the reattributed loss and with respect to other pre-change losses, appropriate adjustments must be made so that value is not improperly omitted or duplicated as a result of the reattribution. For example, if the subsidiary has an ownership change upon its departure, and the common parent (as successor) has an ownership change with respect to the reattributed pre-change separate attribute upon its reattribution under paragraph (d)(3)(i) of this section, proper adjustments must be made so that the value of the subsidiary is not taken into account more than once in determining the section 382 limitation for the reattributed loss and the loss that is not reattributed.

(v) *Special rule for continuity of business requirement*. If the reattributed loss is a pre-change attribute of new loss member and the reattribution occurs within the two-year period beginning on the change date, then, starting immediately after the reattribution, the continuity of business requirement of section 382(c)(1) is applied with respect to the business enterprise of the common parent. Similar principles apply if the reattributed loss is a pre-change subgroup attribute and, on the day after the reattribution, the common parent is not a member of the loss subgroup.

(5) *Election to reattribute section 382 limitation*—(i) *Effect of election*. The common parent may elect to apportion to itself all or part of any separate section 382 limitation or subgroup section 382 limitation to which the loss is subject immediately before the reattribution. However, no net unrealized built-in gain of the member (or loss subgroup) whose loss is reattributed can be apportioned to the common parent. The principles of § 1.1502–95(c) apply to the apportionment, treating, as the context requires, references to the former member as references to the common parent, and references to the consolidated section 382 limitation as references to the separate section 382 limitation (or subgroup section 382 limitation) that is being apportioned. Thus, for example, the common parent can reattribute to itself all or part of the value element or adjustment element of the limitation, and any part of such element that is apportioned requires a corresponding reduction in such element of the separate section 382 limitation of the subsidiary whose loss is reattributed (or in the subgroup section 382 limitation if the reattributed loss is a pre-change subgroup attribute). Appropriate adjustments must be made to the separate section 382 limitation (or subgroup section 382 limitation) for the consolidated return year in which the reattribution is made

to reflect that the reattributed loss is an attribute acquired by the common parent during the year in a transaction to which section 381(a) applies. The election is made by the common parent as part of the election to reattribute the loss. See §1.1502–36(e)(5)(x) for the time and manner of making the election.

(ii) *Examples*. The following examples illustrate the principles of this paragraph (d)(5):

Example 1. Consequence of apportionment. (i) Facts. P, the common parent of a consolidated group, purchases all of the stock of L on December 31, year 1. L carries over a net operating loss arising in year 1 to each of the next 5 taxable years. The purchase of the L stock causes an ownership change of L, and results in a separate section 382 limitation of $10 for L's net operating loss carryover based on the value of the L stock. On July 2, year 3, P sells 30% of the L stock to A. Under §1.1502–36(d)(6), P elects to reattribute to itself $110 of L's $200 net operating loss carryover. P also elects to apportion to itself $6 of the $10 value element of the separate section 382 limitation.

(ii) *Analysis*. (A) *P's separate section 382 limitation*. For the consolidated return years ending after December 31, year 3, P's separate section 382 limitation with respect to the reattributed net operating loss carryover is $6, adjusted as appropriate for any short taxable year, unused section 382 limitation, or other adjustment. For the P group's consolidated return year ending December 31, year 3, the separate section 382 limitation for L's net operating loss carryover is $8, the sum of $5 and $3. Five dollars of the limitation is the amount that bears the same relationship to $10 as the number of days in the period ending with the deemed section 381(a) transaction, 183 days, bears to 365. Three dollars of the limitation is the amount that bears the same relationship to $6 as the number of days in the period between July 3 and December 31, 182, bears to 365.

(B) *L's separate section 382 limitation*. For L's taxable years ending after December 31, year 3, L's separate section 382 limitation for its $90 of net operating loss carryover that was not reattributed to P is $4, adjusted as appropriate for any short taxable year, unused section 382 limitation, or other adjustment. For L's short taxable year ending December 31, year 3, the section 382 limitation for its $90 of net operating loss carryover is $2, the amount that bears the same relationship to $4 (the portion of the value element that was not apportioned to P), as the number of days during the short taxable year, 182 days, bears to 365. See §1.382–5(c).

Example 2. No apportionment required for consolidated pre-change attribute. (i) *Facts*. P, the common parent of a consolidated group, forms L. For year 1, L has an operating loss of $70 that is not absorbed and is included in the group's consolidated net operating loss that is carried over to subsequent years. On January 1 of year 3, A buys all of the P stock and the P group has an ownership change. The consolidated section 382 limitation based on the value of the P stock is $10.

(ii) *Analysis*. On April 13 of year 4, P sells all of the stock of L to B and, under §1.1502–36(d)(6), elects to reattribute to itself $45 of L's net operating loss carryover. Following the reattribution, the $45 portion of the year 1 net operating loss carryover retains its character as a pre-change consolidated attribute, and remains subject to so much of the $10 consolidated section 382 limitation as P does not elect to apportion to L under §1.1502–95(c).

(e) *Time and manner of making election under §1.1502–91(d)(4)*—(1) *In general*. This paragraph (e) prescribes the time and manner of making the election under §1.1502–91(d)(4), relating to treating two or more corporations as treating the section 1504(a)(1) requirement of §1.1502–91(d)(1)(ii) and (d)(2)(ii) as satisfied.

(2) *Election statement*. An election under §1.1502–91(d)(4) must be made by the common parent. The election must be made in the form of the following statement: ''THIS IS AN ELECTION UNDER §1.1502–91(d)(4) TO TREAT THE FOLLOWING CORPORATIONS AS MEETING THE REQUIREMENTS OF §1.1502–91 (d)(1)(ii) AND (d)(2)(ii) IMMEDIATELY AFTER THEY BECAME MEMBERS OF THE GROUP.'' [List separately the name of each corporation, its E.I.N., and the date that it became a member of the group]. If separate elections are being made for corporations that became members at different times or that were acquired from different affiliated groups, provide a separate statement and list for each election.

(3) The election statement must be filed by the common parent with its income tax return for the consolidated return year in which the members with respect to which the election is made become members of the group. Such election must be filed on or before the due date for such income tax return, including extensions.

(4) An election made under this paragraph (e) is irrevocable.

[T.D. 8824, 64 FR 36170, July 2, 1999, as amended by T.D. 9424, 73 FR 53985, Sept. 17, 2008]

§ 1.1502–97 Special rules under section 382 for members under the jurisdiction of a court in a title 11 or similar case. [Reserved]

§ 1.1502–98 Coordination with section 383.

The rules contained in §§1.1502–91 through 1.1502–96 also apply for purposes of section 383, with appropriate adjustments to reflect that section 383 applies to credits and net capital losses. For example, subgroups with respect to the carryover of general business credits, minimum tax credits, unused foreign tax, and net capital loss are determined by applying the principles of §1.1502–91(d)(1). Similarly, in the case of net capital losses, general business credits, and excess foreign taxes that are pre-change attributes, §1.383–1 applies the principles of §§1.1502–91 through 1.1502–96. For example, if a loss group has an ownership change under §1.1502–92 and has a carryover of unused general business credits from a pre-change consolidated return year to a post-change consolidated return year, the amount of the group's regular tax liability for the post-change year that can be offset by the carryover cannot exceed the consolidated section 383 credit limitation for that post-change year, determined by applying the principles of §§1.383–1(c)(6) and 1.1502–93 (relating to the computation of the consolidated section 382 limitation).

[T.D. 8824, 64 FR 36174, July 2, 1999, as amended by T.D. 8884, 65 FR 33760, May 25, 2000]

§ 1.1502–99 Effective/applicability dates.

(a) *In general*. Except as provided in paragraphs (b) and (c) of this section, §§1.1502–91 through 1.1502–96 and §1.1502–98 apply to any testing date on or after June 25, 1999. Sections 1.1502–94 through 1.1502–96 also apply to a corporation that becomes a member of a group or ceases to be a member of a group (or loss subgroup) on any date on or after June 25, 1999.

(b) *Special rules*—(1) *Election to treat subgroup parent requirement as satisfied*. Section 1.1502–91(d)(4), §1.1502–91(d)(7), Example 4, §1.1502–92(b)(1)(iii), §1.1502–92(b)(2), Example 5, the last two sentences of §1.1502–95(b)(3), §1.1502–95(d)(2)(i), and §1.1502–96(e)(all of which relate to the election under §1.1502–91(d)(4) to treat the loss subgroup parent requirement as satisfied) apply to corporations that become members of a consolidated group in taxable years for which the due date of the income tax return (without extensions) is after June 25, 1999.

(2) *Principal purpose of avoiding a limitation*. The third sentence of §1.1502–91(d)(5) (relating to members excluded from a loss subgroup) applies to corporations that become members of a consolidated group on or after June 25, 1999.

(3) *Ceasing to be a member of a loss subgroup*—(i) *Ownership change of a loss subgroup*. Section 1.1502–95(d)(2)(ii) and §1.1502–95(d)(3), Example 3 apply to corporations that cease to bear a relationship described in section 1504(a)(1) to a loss subgroup parent in taxable years for which the due date of the income tax return (without extensions) is after June 25, 1999.

(ii) *Expiration of 5-year period*. Section 1.1502–95(d)(2)(iii) applies with respect to the day after the last day of any 5 consecutive year period described in that section that ends in a taxable year for which the due date of the income tax return (without extensions) is after June 25, 1999.

(4) *Reattribution of losses under §1.1502–36(d)(6)*. Section 1.1502–96(d) applies to reattributions of net operating loss carryovers, capital loss carryovers, and deferred deductions in connection with a transfer of stock to which §1.1502–36 applies, and the election under §1.1502–96(d)(5) (relating to an election to reattribute section 382 limitation) can be made with an election under §1.1502–36(d)(6) to reattribute a loss to the common parent that is filed at the time and in the manner provided in §1.1502–36(e)(5)(x).

(5) *Election to apportion net unrealized built-in gain*. In the case of corporations that cease to be members of a loss group (or loss subgroup) before June 25, 1999 in a taxable year for which the due

date of the income tax return (without extensions) is after June 25, 1999, §1.1502–95(a), (b), (c), and (f) apply to those corporations if the common parent makes the election described in the second sentence of paragraph (c)(1) of §1.1502–95 in the time and manner prescribed in paragraph (f) of §1.1502–95.

(c) *Testing period may include a period beginning before June 25, 1999*—

(1) *In general*. A testing period for purposes of §§1.1502–91 through 1.1502–96 and 1.1502–98 may include a period beginning before June 25, 1999. Thus, for example, in applying §1.1502–92(b)(1)(i)(relating to the determination of an ownership change of a loss group), the determination of the lowest percentage of ownership interest of any 5-percent shareholder of the common parent during a testing period ending on a testing date occurring on or after June 25, 1999 takes into account the period beginning before June 25, 1999, except to the extent that the period is more than 3 years before the testing date or is otherwise before the beginning of the testing period. See §1.1502–92(b)(1).

(2) *Transition rule for net unrealized built-in loss*. A loss group (or loss subgroup) that has a net unrealized built-in loss on a testing date on or after June 25, 1999 may apply §1.1502–91A(g) (and §1.1502–96A(a) as it relates to §1.1502–91A(g)) for the period ending on the day before June 25, 1999 to determine under §1.382–2T(d)(ii)(A) the earliest date that its testing period begins (treating the day before June 25, 1999 as the end of a taxable year.) Thus, for example, if a consolidated group with no net operating losses has a net unrealized built-in loss determined under §1.1502–91(g) on a testing date after June 25, 1999, but, under §1.1502–91A(g), does not have a net unrealized built-in loss for the period ending on the day before June 25, 1999, the group's testing period begins no earlier than June 25, 1999.

[T.D. 8824, 64 FR 36174, July 2, 1999, as amended by T.D. 9424, 73 FR 53986, Sept. 17, 2008]

§ 1.1502–100 Corporations exempt from tax.

(a) *In general*—(1) *Computation of tax liability*. The tax liability for a consolidated return year of a group of two or more corporations described in section 1504(e) which are exempt from taxation under section 501 (hereinafter referred to in this section as ''exempt group'') shall be determined on a consolidated basis by applying the provisions of subchapter F of chapter 1 of the code in the manner provided in this section. See section 1504(e) for tax-exempt corporations eligible to file a consolidated return.

(2) *Applicability of other consolidated return provisions*. The provisions of §1.1502–1 through §1.1502–80 shall be applicable to an exempt group to the extent they are not inconsistent with the provisions of this section or the provisions of subchapter F of chapter 1 of the Code. For purposes of applying the provisions of §1.1502–1 through §1.1502–80 to an exempt group, the following substitutions shall be made:

(i) The term ''exempt group'' shall be substituted for the term ''group'',

(ii) The terms ''unrelated business taxable income'', ''separate unrelated business taxable income'', and ''consolidated unrelated business taxable income'' shall be substituted for the terms ''taxable income'', ''separate taxable income'', and ''consolidated taxable income'', and

(iii) The term ''consolidated liability for tax determined under §1.1502–2'' (or an equivalent term) shall mean the consolidated liability for tax of an exempt group determined under paragraph (b) of this section.

(b) *Consolidated liability for tax*. The tax liability for a consolidated return year of an exempt group is the tax imposed by section 511(a) or section 1201(a) on the consolidated unrelated business taxable income for the year (determined under paragraph (c) of this section), and by allowing the credits and surtax exemption provided in §1.1502–2.

(c) *Consolidated unrelated business taxable income*. The consolidated unrelated business taxable income for a consolidated return year shall be determined by taking into account:

(1) The separate unrelated business taxable income of each member of the exempt group (determined under paragraph (d) of this section);

(2) Any consolidated net operating loss deduction (determined under

§ 1.1502–21A or 1.1502–21 (as appropriate) subject to the limitations provided in section 512(b)(6);

(3) Any consolidated charitable contribution deduction (determined under § 1.1502–24) subject to the limitations provided in section 512(b)(10); and

(4) Any consolidated net gain or net loss from the disposition of debt-financed property (as defined in section 514(b)) taken into account as provided by section 514(a), or from the cutting of timber to which section 631 applies.

(d) *Separate unrelated business taxable income.* The separate unrelated business taxable income of a member of an exempt group shall be computed in accordance with the provisions of section 512 covering the determination of unrelated business taxable income of separate corporations, except that:

(1) The provisions of paragraphs (a) through (k) and (o) of § 1.1502–12 shall apply; and

(2) No charitable contributions deduction shall be taken into account under section 512(b)(10).

See sections 511(c) and 512(a)(3)(C) for special rules applicable to organizations described in section 501(c)(2).

[T.D. 7595, 44 FR 10382, Feb. 20, 1979, as amended by T.D. 8677, 61 FR 33325, June 27, 1996; T.D. 8823, 64 FR 36101, July 2, 1999]

§ 1.1503–1 Computation and payment of tax.

(a) *General rule.* In any case in which a consolidated return is filed or required to be filed, the tax shall be determined, computed, assessed, collected, and adjusted in accordance with the regulations prescribed under section 1502 promulgated prior to the last date prescribed by law for the filing of such return.

(b) *Limitation.* If the affiliated group includes one or more Western Hemisphere trade corporations (as defined in section 921) or one or more regulated public utilities (as defined in section 1503 (c)), the increase in tax described in section 1503 (a) shall be applied in a manner provided in the regulations under section 1502.

[T.D. 6500, 25 FR 12105, Nov. 26, 1960, as amended by T.D. 7244, 37 FR 28897, Dec. 30, 1972]

§ 1.1503–2 Dual consolidated loss.

(a) *Purpose and scope.* This section provides rules for the application of section 1503(d), concerning the determination and use of dual consolidated losses. Paragraph (b) of this section provides a general rule prohibiting a dual consolidated loss from offsetting the taxable income of a domestic affiliate. Paragraph (c) of this section provides definitions of the terms used in this section. Paragraph (d) of this section provides rules for calculating the amount of a dual consolidated loss and for adjusting the basis of stock of a dual resident corporation. Paragraph (e) of this section contains an anti-avoidance provision. Paragraph (f) of this section applies the rules of paragraph (d) of this section to the computation of foreign tax credit limitations. Paragraph (g) of this section provides certain exceptions to the limitation rule of paragraph (b) of this section. Finally, paragraph (h) of this section provides the effective date of the regulations and a provision for the retroactive application of the regulations to qualifying taxpayers.

(b) *In general*—(1) *Limitation on the use of a dual consolidated loss to offset income of a domestic affiliate.* Except as otherwise provided in this section, a dual consolidated loss of a dual resident corporation cannot offset the taxable income of any domestic affiliate in the taxable year in which the loss is recognized or in any other taxable year, regardless of whether the loss offsets income of another person under the income tax laws of a foreign country and regardless of whether the income that the loss may offset in the foreign country is, has been, or will be subject to tax in the United States. Pursuant to paragraph (c) (1) and (2) of this section, the same limitation shall apply to a dual consolidated loss of a separate unit of a domestic corporation as if the separate unit were a wholly owned subsidiary of such corporation.

(2) *Limitation on the use of a dual consolidated loss to offset income of a successor-in-interest.* A dual consolidated loss of a dual resident corporation also cannot be used to offset the taxable income of another corporation by means of a transaction in which the other corporation succeeds to the tax attributes

of the dual resident corporation under section 381 of the Code. Similarly, a dual consolidated loss of a separate unit of a domestic corporation cannot be used to offset income of the domestic corporation following the termination, liquidation, sale, or other disposition of the separate unit. However, if a dual resident corporation transfers its assets to another corporation in a transaction subject to section 381, and the acquiring corporation is a dual resident corporation of the same foreign country of which the transferor dual resident corporation is a resident, or a domestic corporation that carries on the business activities of the transferor dual resident corporation as a separate unit, then income generated by the transferee dual resident corporation, or separate unit, may be offset by the carryover losses of the transferor dual resident corporation. In addition, if a domestic corporation transfers a separate unit to another domestic corporation in a transaction subject to section 381, the income generated by the separate unit following the transfer may be offset by the carryover losses of the separate unit.

(3) *Application of rules to multiple tiers of separate units.* If a separate unit of a domestic corporation is owned indirectly through another separate unit, the principles of paragraph (b) (1) and (2) of this section shall apply as if the upper-tier separate unit were a subsidiary of the domestic corporation and the lower-tier separate unit were a lower-tier subsidiary.

(4) *Examples.* The following examples illustrate the application of this paragraph (b).

Example 1. P, a domestic corporation, owns all of the outstanding stock of DRC, a domestic corporation. P and DRC file a consolidated U.S. income tax return. DRC is managed and controlled in Country W, a country that determines the tax residence of corporations according to their place of management and control. Therefore, DRC is a dual resident corporation and any net operating loss it incurs is a dual consolidated loss. In Years 1 through 3, DRC incurs dual consolidated losses. Under this paragraph (b), the dual consolidated losses may not be used to offset P's income on the group's consolidated U.S. income tax return. At the end of Year 3, DRC sells all of its assets and discontinues its business operations. DRC is then liquidated into P, pursuant to the provisions of section 332. Normally, under section 381, P would succeed to, and be permitted to utilize, DRC's net operating loss carryovers. However, this paragraph (b) prohibits the dual consolidated losses of DRC from reducing P's income for U.S. tax purposes. Therefore, DRC's net operating loss carryovers will not be available to offset P's income.

Example 2. The facts are the same as in *Example 1*, except that DRC does not sell its assets and, following the liquidation of DRC, P continues to operate DRC's business as a separate unit (e.g., a branch). DRC's loss carryovers are available to offset P's income generated by the assets previously owned by DRC and now held by the separate unit.

(c) *Definitions.* The following definitions shall apply for purposes of this section.

(1) *Domestic corporation.* The term ''domestic corporation'' has the meaning assigned to it by section 7701(a) (3) and (4). The term also includes any corporation otherwise treated as a domestic corporation by the Code, including, but not limited to, sections 269B, 953(d), and 1504 (d). For purposes of this section, any separate unit of a domestic corporation, as defined in paragraph (c) (3) and (4) of this section, shall be treated as a separate domestic corporation.

(2) *Dual resident corporation.* A dual resident corporation is a domestic corporation that is subject to the income tax of a foreign country on its worldwide income or on a residence basis. A corporation is taxed on a residence basis if it is taxed as a resident under the laws of the foreign country. An S corporation, as defined in section 1361, is not a dual resident corporation. For purposes of this section, any separate unit of a domestic corporation, as defined in paragraph (c) (3) and (4) of this section, shall be treated as a dual resident corporation. Unless otherwise indicated, any reference in this section to a dual resident corporation refers also to a separate unit.

(3) *Separate unit*—(i) The term ''separate unit'' shall mean any of the following:

(A) A foreign branch, as defined in §1.367(a)-6T(g) (or a successor regulation), that is owned either directly by a domestic corporation or indirectly by a domestic corporation through ownership of a partnership or trust interest (regardless of whether the partnership or trust is a United States person);

(B) an interest in a partnership; or

(C) an interest in a trust.

(ii) If two or more foreign branches located in the same foreign country are owned by a single domestic corporation and the losses of each branch are made available to offset the income of the other branches under the tax laws of the foreign country, within the meaning of paragraph (c)(15)(ii) of this section, then the branches shall be treated as one separate unit.

(4) *Hybrid entity separate unit.* The term ''separate unit'' includes an interest in an entity that is not taxable as an association for U.S. income tax purposes but is subject to income tax in a foreign country as a corporation (or otherwise at the entity level) either on its worldwide income or on a residence basis.

(5) *Dual consolidated loss*—(i) *In general.* The term ''dual consolidated loss'' means the net operating loss (as defined in section 172(c) and the regulations thereunder) of a domestic corporation incurred in a year in which the corporation is dual resident corporation. The dual consolidated loss shall be computed under paragraph (d)(1) of this section. The fact that a particular item taken into account in computing a dual resident corporation's net operating loss is not taken into account in computing income subject to a foreign country's income tax shall not cause such item to be excluded from the calculation of the dual consolidated loss.

(ii) *Exceptions.* A dual consolidated loss shall not include the following—

(A) A net operating loss incurred by a dual resident corporation in a foreign country whose income tax laws—

(*1*) Do not permit the dual resident corporation to use its losses, expenses or deductions to offset the income of any other person that is recognized in the same taxable year in which the losses, expenses or deductions are incurred; and

(*2*) Do not permit the losses, expenses or deductions of the dual resident corporation to be carried over or back to be used, by any means, to offset the income of any other person in other taxable years; or

(B) A net operating loss incurred during that portion of the taxable year prior to the date on which the domestic corporation becomes a dual resident corporation or subsequent to the date on which the domestic corporation ceases to be a dual resident corporation. For purposes of determining the amount of the net operating loss incurred in that portion of the taxable year prior to the date on which the domestic corporation becomes a dual resident corporation or subsequent to the date on which the domestic corporation ceases to be a dual resident corporation, in no event shall more than the aggregate of the equal daily portion of the net operating loss commensurate with the portion of the taxable year during which the domestic corporation was not a dual resident corporation be allocated to that portion of the taxable year in which the domestic corporation was not a dual resident corporation.

(iii) *Dual consolidated losses of separate units that are partnership interests, including interests in hybrid entities.* [Reserved]

(6) *Subject to tax.* For purposes of determining whether a domestic corporation is subject to the income tax of a foreign country on its income, the fact that the corporation has no actual income tax liability to the foreign country for a particular taxable year shall not be taken into account.

(7) *Foreign country.* For purposes of this section, possessions of the United States shall be considered foreign countries.

(8) *Consolidated group.* The term ''consolidated group'' means an affiliated group, as defined in section 1504(a), with which a dual resident corporation or domestic owner files a consolidated U.S. income tax return.

(9) *Domestic owner.* The term ''domestic owner'' means a domestic corporation that owns one or more separate units.

(10) *Affiliated dual resident corporation or affiliated domestic owner.* The term ''affiliated dual resident corporation'' or ''affiliated domestic owner'' means a dual resident corporation or domestic owner that is a member of a consolidated group.

(11) *Unaffiliated dual resident corporation or unaffiliated domestic owner.* The

term ''unaffiliated dual resident corporation'' or ''unaffiliated domestic owner'' means a dual resident corporation or domestic owner that is an unaffiliated domestic corporation.

(12) *Successor-in-interest*. The term ''successor-in-interest'' means an acquiring corporation that succeeds to the tax attributes of an acquired corporation by means of a transaction subject to section 381.

(13) *Domestic affiliate*. The term ''domestic affiliate'' means any member of an affiliated group, without regard to the exceptions contained in section 1504(b) (other than section 1504(b)(3)) relating to includible corporations.

(14) *Unaffiliated domestic corporation*. The term ''unaffiliated domestic corporation'' means a domestic corporation that is not a member of an affiliated group.

(15) *Use of loss to offset income of a domestic affiliate or another person*—(i) A dual consolidated loss shall be deemed to offset income of a domestic affiliate in the year it is included in the computation of the consolidated taxable income of a consolidated group. The fact that no tax benefit results from the inclusion of the dual consolidated loss in the computation of the group's consolidated taxable income in the taxable year shall not be taken into account.

(ii) Except as provided in paragraph (c)(15)(iii) of this section, a loss, expense, or deduction taken into account in computing a dual consolidated loss shall be deemed to offset income of another person under the income tax laws of a foreign country in the year it is made available for such offset. The fact that the other person does not have sufficient income in that year to benefit from such an offset shall not be taken into account. However, where the laws of a foreign country provide an election that would enable a dual resident corporation or separate unit to use its losses, expenses, or deductions to offset income of another person, the losses, expenses, or deductions shall be considered to offset such income only if the election is made.

(iii) The losses, expenses, or deductions taken into account in computing a dual resident corporation's or separate unit's dual consolidated loss shall not be deemed to offset income of another person under the income tax laws of a foreign country for purposes of this section, if under the laws of the foreign country the losses, expenses, or deductions of the dual resident corporation or separate unit are used to offset the income of another dual resident corporation or separate unit within the same consolidated group (or income of another separate unit that is owned by the unaffiliated domestic owner of the first separate unit). If the losses, expenses, or deductions of a dual resident corporation or separate unit are made available under the laws of a foreign country to offset the income of other dual resident corporations or separate units within the same consolidated group (or other separate units owned by the unaffiliated domestic owner of the first separate unit), as well as the income of another person, and the laws of the foreign country do not provide applicable rules for determining which person's income is offset by the losses, expenses, or deductions, then for purposes of this section, the losses, expenses or deductions shall be deemed to offset the income of the other dual resident corporations or separate units, to the extent of such income, before being considered to offset the income of the other person.

(iv) Except to the extent paragraph (g)(1) of this section applies, where the income tax laws of a foreign country deny the use of losses, expenses, or deductions of a dual resident corporation to offset the income of another person because the dual resident corporation is also subject to income taxation by another country on its worldwide income or on a residence basis, the dual resident corporation shall be treated as if it actually had offset its dual consolidated loss against the income of another person in such foreign country.

(16) *Examples*. The following examples illustrate this paragraph (c).

Example 1. X, a member of a consolidated group, conducts business through a branch in Country Y. Under Country Y's income tax laws, the branch is taxed as a permanent establishment and its losses may be used under the Country Y form of consolidation to offset the income of Z, a Country Y affiliate of X. In Year 1, the branch of X incurs an overall loss that would be treated as a net operating loss if the branch were a separate domestic corporation. Under paragraph (c)(3) of this

section, the branch of X is treated as a separate domestic corporation and a dual resident corporation. Thus, under paragraph (c)(5), its loss constitutes a dual consolidated loss. Unless X qualifies for an exception under paragraph (g) of this section, paragraph (b) of this section precludes the use of the branch's loss to offset any income of X not derived from the branch operations or any income of a domestic affiliate of X.

Example 2. A and B are members of a consolidated group. FC is a Country X corporation that is wholly owned by B. A and B organize a partnership, P, under the laws of Country X. P conducts business in Country X and its business activity constitutes a foreign branch within the meaning of paragraph (c)(3)(i)(A) of this section. P also earns U.S. source income that is unconnected with the branch operations and, therefore, is not subject to tax by Country X. Under the laws of Country X, the branch can consolidate with FC. The interests in P held by A and B are each treated as a dual resident corporation. The branch is also treated as a separate dual resident corporation. Unless an exception under paragraph (g) of this section applies, any dual consolidated loss incurred by P's branch cannot offset the U.S. source income earned by P or any other income of A or B.

Example 3. X is classified as a partnership for U.S. income tax purposes. A, B, and C are the sole partners of X. A and B are domestic corporations and C is a Country Y corporation. For U.S. income tax purposes, each partner has an equal interest in each item of partnership profit or loss. Under Country Y's law, X is classified as a corporation and its income and losses may be used under the Country Y form of consolidation to offset the income of companies that are affiliates of X. Under paragraph (c)(3) and (4) of this section, the partnership interests held by A and B are treated as separate domestic corporations and as dual resident corporations. Unless an exception under paragraph (g) of this section applies, losses allocated to A and B can only be used to offset profits of X allocated to A and B, respectively.

Example 4. P, a domestic corporation, files a consolidated U.S. income tax return with its two wholly-owned domestic subsidiaries, DRC1 and DRC2. Each subsidiary is also treated as a Country Y resident for Country Y tax purposes. Thus, DRC1 and DRC2 are dual resident corporations. DRC1 owns FC, a Country Y corporation. Country Y's tax laws permit affiliated resident corporations to file a form of consolidated return. In Year 1, DRC1 incurs a $200 net operating loss for both U.S. and Country Y tax purposes, while DRC2 recognizes $200 of income under the tax laws of each country. FC also earns $200 of income for Country Y tax purposes. DRC1, DRC2, and FC file a Country Y consolidated return. However, Country Y has no applicable rules for determining which income is offset by DRC1's $200 loss. Under paragraph (c)(15)(iii) of this section, the loss shall be treated as offsetting DRC2's $200 of income. Because DRC1 and DRC2 are members of the same consolidated group, for purposes of this section, the offset of DRC1's loss against the income of DRC2 is not considered a use of the loss against the income of another person under the laws of a foreign country.

Example 5. DRC, a domestic corporation, files a consolidated U.S. income tax return with its parent, P. DRC is also subject to tax in Country Y on its worldwide income. Therefore, DRC is a dual resident corporation and any net operating loss incurred by DRC is a dual consolidated loss. Country Y's tax laws permit corporations that are subject to tax on their worldwide income to use the Country Y form of consolidation, thus enabling eligible corporations to use their losses to offset income of affiliates. However, to prevent corporations like DRC from offsetting losses against income of affiliates in Country Y and then again offsetting the losses against income of foreign affiliates under the tax laws of another country, Country Y prevents a corporation that is also subject to the income tax of another country on its worldwide income or on a residence basis from using the Country Y form of consolidation. There is no agreement, as described in paragraph (g)(1) of this section, between the United States and Country Y. Because of Country Y's statute, DRC will be treated as having actually offset its losses against the income of affiliates in Country Y under paragraph (c)(15)(iv) of this section. Therefore, DRC will not be able to file an agreement described in paragraph (g)(2) of this section and offset its losses against the income of P or any other domestic affiliate.

(d) *Special rules for accounting for dual consolidated losses*—(1) *Determination of amount of dual consolidated loss*—(i) *Dual resident corporation that is a member of a consolidated group.* For purposes of determining whether a dual resident corporation that is a member of a consolidated group has a dual consolidated loss for the taxable year, the dual resident corporation shall compute its taxable income (or loss) in accordance with the rules set forth in the regulations under section 1502 governing the computation of consolidated taxable income, taking into account only the dual resident corporation's items of income, gain, deduction, and loss for the year. However, for purposes of this computation, the following items shall not be taken into account:

(A) Any net capital loss of the dual resident corporation; and

(B) Any carryover or carryback losses.

(ii) *Dual resident corporation that is a separate unit of a domestic corporation.* For purposes of determining whether a separate unit has a dual consolidated loss for the taxable year, the separate unit shall compute its taxable income (or loss) as if it were a separate domestic corporation and a dual resident corporation in accordance with the provisions of paragraph (d)(1)(i) of this section, using only those items of income, expense, deduction, and loss that are otherwise attributable to such separate unit.

(2) *Effect of a dual consolidated loss.* For any taxable year in which a dual resident corporation or separate unit has a dual consolidated loss to which paragraph (b) of this section applies, the following rules shall apply.

(i) If the dual resident corporation is a member of a consolidated group, the group shall compute its consolidated taxable income without taking into account the items of income, loss, or deduction taken into account in computing the dual consolidated loss. The dual consolidated loss may be carried over or back for use in other taxable years as a separate net operating loss carryover or carryback of the dual resident corporation arising in the year incurred. It shall be treated as a loss incurred by the dual resident corporation in a separate return limitation year and (without regard to whether the dual resident corporation is a common parent) shall be subject to all of the limitations of §§ 1.1502–21A(c) or 1.1502–21(c), as appropriate (relating to limitations on net operating loss carryovers and carrybacks from separate return limitation years).

(ii) The unaffiliated domestic owner of a separate unit, or the consolidated group of an affiliated domestic owner, shall compute its taxable income without taking into account the items of income, loss or deduction taken into account in computing the separate unit's dual consolidated loss. The dual consolidated loss shall be treated as a loss incurred by a separate corporation and its use shall be subject to all of the limitations of §§ 1.1502–21A(c) or 1.1502–21(c), as appropriate, as if the separate unit were filing a consolidated return with the unaffiliated domestic owner or with the consolidated group of the affiliated domestic owner.

(3) *Basis adjustments for dual consolidated losses*—(i) *Dual resident corporation that is a member of an affiliated group.* When a dual resident corporation is a member of a consolidated group, each other member owning stock in the dual resident corporation shall adjust the basis of the stock in the following manner.

(A) *Positive adjustments.* Positive adjustments shall be made in accordance with the principles of § 1.1502–32(b)(1), except that there shall be no positive adjustment under § 1.1502–32(b)(1)(ii) for any amount of the dual consolidated loss that is not absorbed as a result of the application of paragraph (b) of this section. In addition, there shall be no positive adjustment for any amount included in income pursuant to paragraph (g)(2)(vii) of this section.

(B) *Negative adjustments.* Negative adjustments shall be made in accordance with the principles of § 1.1502–32(b)(2), except that there shall be no negative adjustment under § 1.1502–32(b)(2)(ii) for the amount of the dual consolidated loss subject to paragraph (b) of this section that is absorbed in a carryover year.

(ii) *Dual resident corporation that is a separate unit arising from an interest in a partnership.* Where a separate unit is an interest in a partnership, the domestic owner shall adjust its basis in the separate unit in accordance with section 705, except that no increase in basis shall be permitted for any amount included as income pursuant to paragraph (g)(2)(vii) of this section.

(4) *Examples.* The following examples illustrate this paragraph (d).

Example 1. (i) P, S1, S2, and T are domestic corporations. P owns all of the stock of S1 and S2. S2 owns all of the stock of T. T is a resident of Country FC for Country FC income tax purposes. Therefore, T is a dual resident corporation. P, S1, S2, and T file a consolidated U.S. income tax return. X and Y are corporations that are not members of the consolidated group.

(ii) At the beginning of Year 1, P has a basis of $1000 in the stock of S2. S2 has a $500 basis in the stock of T.

(iii) In Year 1, T incurs interest expense in the amount of $100. In addition, T sells a noncapital asset, *u*, in which it has a basis of

$10, to S1 for $50. T also sells a noncapital asset, *v*, in which it has a basis of $200, to S1 for $100. The sales of *u* and *v* are intercompany transactions described in §1.1502–13. T also sells a capital asset, *z*, in which it has a basis of $180, to Y for $90. In Year 1, S1 earns $200 of separate taxable income, calculated in accordance with §1.1502–12, as well as $90 of capital gain from a sale of an asset to X. P and S2 have no items of income, loss, or deduction for Year 1.

(iv) In Year 1, T has a dual consolidated loss of $100 (attributable to its interest expense). T's $90 capital loss is not included in the computation of the dual consolidated loss. Instead, T's capital loss is included in the computation of the consolidated group's capital gain net income under §1.1502–22(c) and is used to offset S1's $90 capital gain.

(v) No elective agreement, as described in paragraph (g)(1) of this section, exists between the United States and Country FC. For Country FC tax purposes, T's $100 loss is offset against the income of a Country FC affiliate. Therefore, T is not eligible for the exception provided in paragraph (g)(2) of this section.

(vi) Because T has a dual consolidated loss for the year, the consolidated taxable income of the consolidated group is calculated without regard to T's items of income, loss or deduction taken into account in computing the dual consolidated loss. Therefore, the consolidated taxable income of the consolidated group is $200 (the sum of $200 of separate taxable income earned by S1 plus $90 of capital gain earned by S1 minus $90 of capital loss incurred by T). The $40 gain recognized by T upon the sale of item *u* to S1 and the $100 loss recognized by T upon the sale of item *v* to S1 are deferred pursuant to §1.1502–13(c)(1).

(vii) S2 may not make the positive adjustment provided for in §1.1502–32(b)(1)(ii) to its basis in the stock of T for the $100 dual consolidated loss incurred by T. In addition, no positive adjustment in the basis of the stock is required for T's $90 capital loss because the loss has been absorbed by the consolidated group. S2, however, must make the negative adjustment provided for in §1.1502–32(b)(2)(i) for its allocable part of T's deficit in earnings and profits for the taxable year attributable to both T's $100 dual consolidated loss and T's $90 capital loss. Thus, as provided in §1.1502–32(e)(1), S2 must make a $190 net negative adjustment to its basis in the stock of T, reducing its basis to $310. As provided in §1.1502–33(c)(4)(ii)(a), S2's earnings and profits for Year 1 will reflect S2's decrease in its basis in T stock for the taxable year. Since S2 has no other earnings and profits for the taxable year, S2 has a $190 deficit in earnings and profits for the year. As provided in §1.1502–32(b)(2)(i), P must make a negative adjustment to its basis in the stock of S2 for its allocable part of S2's deficit in earnings and profits for the taxable year. Thus, P must make a $190 net negative adjustment to its basis in S2 stock, reducing its basis to $810.

Example 2. (i) The facts are the same as in *Example 1*, except that in Year 2, S1 sells items *u* and *v* to X for no gain or loss. The disposition of items *u* and *v* outside of the consolidated group restores the deferred loss and gain to T. T also incurs $100 of interest expense in Year 2. In addition, T sells a noncapital asset, *r*, in which it has a basis of $100, to Y for $300. P and S2 have no items of income, loss, or deduction for Year 2.

(ii) T has $40 of separate taxable income in Year 2, computed as follows:

($100)	interest expense
($100)	sale of item *v* to S1
$ 40	sale of item *u* to S1
$200	sale of item *r* to Y
$ 40	

Thus, T has no dual consolidated loss for the year.

(iii) Since T does not have a dual consolidated loss for the taxable year, the group's consolidated taxable income is calculated in accordance with the general rule of §1.1502–11 and not in accordance with paragraph (d)(2) of this section. T is the only member of the consolidated group that has any income or loss for the taxable year. Thus, the consolidated taxable income of the group, computed without regard to T's dual consolidated loss carryover, is $40.

(iv) As provided by §1.1502–21A(c), the amount of the dual consolidated loss arising in Year 1 that is included in the group's consolidated net operating loss deduction for Year 2 is $40 (that is, the consolidated taxable income computed without regard to the consolidated net operating loss deduction minus such consolidated taxable income recomputed by excluding the items of income and deduction of T). Thus, the group has no consolidated taxable income for the year.

(v) S2 must make the positive adjustment provided for in §1.502–32(b)(1)(i) to its basis in T stock for its allocable part of T's undistributed earnings and profits for the taxable year. S2 cannot make the negative adjustment provided for in §1.1502–32(b)(2)(ii) for the dual consolidated loss of T incurred in Year 1 and absorbed in Year 2. Thus, as provided in §1.1502–32(e)(2), S2 must make a $40 net positive adjustment to its basis in T stock, increasing its basis to $350. As provided in §1.1502–33(c)(4)(ii)(a), S2's earnings and profits for Year 2 will reflect S2's increase in its basis in T stock for the taxable year. Since S2 has no other earnings and profits for the taxable year, S2 has $40 of earnings and profits for the year. As provided in §1.1502–32(b)(1)(i), P must make a positive adjustment to its basis in the stock

of S2 for its allocable part of the undistributed earnings and profits of S2 for the taxable year. Thus, P must make a $40 net positive adjustment to its basis in S2 stock, increasing its basis to $850.

(e) *Special rule for use of dual consolidated loss to offset tainted income*—(1) *In general.* The dual consolidated loss of any dual resident corporation that ceases to be a dual resident corporation shall not be used to offset income of such corporation to the extent that such income is tainted income, as defined in paragraph (e)(2) of this section.

(2) *Tainted income defined.* Tainted income is any income derived from tainted assets, as defined in paragraph (e)(3) of this section, beginning on the date such assets are acquired by the dual resident corporation. In the absence of evidence establishing the actual amount of income that is attributable to the tainted assets, the portion of a corporation's income in a particular taxable year that is treated as tainted income shall be an amount equal to the corporation's taxable income for the year multiplied by a fraction, the numerator of which is the fair market value of the tainted asset at the end of the taxable year and the denominator of which is the fair market value of the total assets owned by the corporation at the end of the taxable year. Documentation submitted to establish the actual amount of income that is attributable to the tainted assets must be attached to the consolidated group's or unaffiliated dual resident corporation's timely filed tax return for the taxable year in which the income is recognized.

(3) *Tainted assets defined.* Tainted assets are any asset acquired by a dual resident corporation in a non-recognition transaction, as defined in section 7701(a)(45), or any assets otherwise transferred to the corporation as a contribution to capital, at any time during the three taxable years immediately preceding the taxable year in which the corporation ceases to be a dual resident corporation or at any time thereafter. Tainted assets shall not include assets that were acquired by such dual resident corporation on or before December 31, 1986.

(4) *Exceptions.* Income derived from assets acquired by a dual resident corporation shall not be subject to the limitation described in paragraph (e)(1) of this section, if—

(i) For the taxable year in which the assets were acquired, the corporation did not have a dual consolidated loss (or a carry forward of a dual consolidated loss to such year); or

(ii) The assets were acquired as replacement property in the ordinary course of business.

(f) *Computation of foreign tax credit limitations.* If a dual resident corporation or separate unit is subject to paragraph (d)(2) of this section, the consolidated group or unaffiliated domestic owner shall compute its foreign tax credit limitation by applying the limitations of paragraph (d)(2). Thus, the dual consolidated loss is not taken into account until the year in which it is absorbed.

(g) *Exception*—(1) *Elective agreement in place between the United States and a foreign country.* Paragraph (b) of this section shall not apply to a dual consolidated loss to the extent the dual resident corporation, or domestic owner of a separate unit, elects to deduct the loss in the United States pursuant to an agreement entered into between the United States and a foreign country that puts into place an elective procedure through which losses offset income in only one country.

(2) *Elective relief provision*—(i) *In general.* Paragraph (b) of this section shall not apply to a dual consolidated loss if the consolidated group, unaffiliated dual resident corporation, or unaffiliated domestic owner elects to be bound by the provisions of this paragraph (g)(2). In order to elect relief under this paragraph (g)(2), the consolidated group, unaffiliated dual resident corporation, or unaffiliated domestic owner must attach to its timely filed (including extensions) U.S. income tax return for the taxable year in which the dual consolidated loss is incurred an agreement described in paragraph (g)(2)(i)(A) of this section. The agreement must be signed under penalties of perjury by the person who signs the return. For taxable years beginning after December 31, 2002, the agreement attached to the income tax return of the consolidated group, unaffiliated dual

resident corporation or unaffiliated domestic owner pursuant to the preceding sentence may be an unsigned copy. If an unsigned copy is attached to the return, the consolidated group, unaffiliated dual resident corporation, or unaffiliated domestic owner must retain the original in its records in the manner specified by §1.6001–1(e). The agreement must include the following items, in paragraphs labeled to correspond with the items set forth in paragraph (g)(2)(i)(A) through (F) of this section.

(A) A statement that the document submitted is an election and an agreement under the provisions of paragraph (g)(2) of this section.

(B) The name, address, identifying number, and place and date of incorporation of the dual resident corporation, and the country or countries that tax the dual resident corporation on its worldwide income or on a residence basis, or, in the case of a separate unit, identification of the separate unit, including the name under which it conducts business, its principal activity, and the country in which its principal place of business is located.

(C) An agreement by the consolidated group, unaffiliated dual resident corporation, or unaffiliated domestic owner to comply with all of the provisions of §1.1503–2(g)(2)(iii)-(vii).

(D) A statement of the amount of the dual consolidated loss covered by the agreement.

(E) A certification that no portion of the dual resident corporation's or separate unit's losses, expenses, or deductions taken into account in computing the dual consolidated loss has been, or will be, used to offset the income of any other person under the income tax laws of a foreign country.

(F) A certification that arrangements have been made to ensure that no portion of the dual consolidated loss will be used to offset the income of another person under the laws of a foreign country and that the consolidated group, unaffiliated dual resident corporation, or unaffiliated domestic owner will be informed of any such foreign use of any portion of the dual consolidated loss.

(ii) *Consistency rule*—(A) If any loss, expense, or deduction taken into account in computing the dual consolidated loss of a dual resident corporation or separate unit is used under the laws of a foreign country to offset the income of another person, then the following other dual consolidated losses (if any) shall be treated as also having been used to offset income of another person under the laws of such foreign country, but only if the income tax laws of the foreign country permit any loss, expense, or deduction taken into account in computing the other dual consolidated loss to be used to offset the income of another person in the same taxable year;

(*1*) Any dual consolidated loss of a dual resident corporation that is a member of the same consolidated group of which the first dual resident corporation or domestic owner is a member, if any loss, expense, or deduction taken into account in computing such dual consolidated loss is recognized under the income tax laws of such country in the same taxable year; and

(*2*) Any dual consolidated loss of a separate unit that is owned by the same domestic owner that owns the first separate unit, or that is owned by any member of the same consolidated group of which the first dual resident corporation or domestic owner is a member, if any loss, expense, or deduction taken into account in computing such dual consolidated loss is recognized under the income tax laws of such country in the same taxable year.

(B) The following examples illustrate the application of this paragraph (g)(2)(ii).

Example 1. P, a domestic corporation, owns A and B, which are domestic corporations, and C, a Country X corporation. A is subject to the income tax laws of Country X on a residence basis and, thus, is a dual resident corporation. B conducts business in Country X through a branch, which is a separate unit under paragraph (c)(3) of this section. The income tax laws of Country X permit branches of foreign corporations to elect to file consolidated returns with Country X affiliates. In Year 1, A incurs a dual consolidated loss, which is used to offset the income of C under the Country X form of consolidation. The branch of B also incurs a net operating loss. However, B elects not to use the loss on a Country X consolidated return to offset the income of foreign affiliates. The use of A's loss to offset the income of C in Country X

will cause the separate unit of B to be treated as if it too had used its dual consolidated loss to offset the income of an affiliate in Country X. Therefore, an election and agreement under this paragraph (g)(2) cannot be made with respect to the separate unit's dual consolidated loss.

Example 2. The facts are the same as in *Example 1*, except that the income tax laws of Country X do not permit branches of foreign corporations to file consolidated income tax returns with Country X affiliates. Therefore, an election and agreement described in this paragraph (g)(2) may be made for the dual consolidated loss incurred by the separate unit of B.

(iii) *Triggering events requiring the recapture of dual consolidated losses*—(A) The consolidated group, unaffiliated dual resident corporation, or unaffiliated domestic owner must agree that, if there is a triggering event described in this paragraph (g)(2)(iii), and no exception applies under paragraph (g)(2)(iv) of this section, the consolidated group, unaffiliated dual resident corporation, or unaffiliated domestic owner will recapture and report as income the amount of the dual consolidated loss provided in paragraph (g)(2)(vii) of this section on its tax return for the taxable year in which the triggering event occurs (or, when the triggering event is a use of the loss for foreign purposes, the taxable year that includes the last day of the foreign tax year during which such use occurs). In addition, the consolidated group, unaffiliated dual resident corporation, or unaffiliated domestic owner must pay any applicable interest charge required by paragraph (g)(2)(vii) of this section. For purposes of this section, any of the following events shall constitute a triggering event:

(*1*) In any taxable year up to and including the 15th taxable year following the year in which the dual consolidated loss that is the subject of the agreement filed under this paragraph (g)(2) was incurred, any portion of the losses, expenses, or deductions taken into account in computing the dual consolidated loss is used by any means to offset the income of any other person under the income tax laws of a foreign country;

(*2*) An affiliated dual resident corporation or affiliated domestic owner ceases to be a member of the consolidated group that filed the election. For purposes of this paragraph (g)(2)(iii)(A)(*2*), a dual resident corporation or domestic owner shall be considered to cease to be a member of the consolidated group if it is no longer a member of the group within the meaning of §1.1502–1(b), or if the group ceases to exist because the common parent is no longer in existence or is no longer a common parent or the group no longer files on the basis of a consolidated return. Such disaffiliation, however, shall not constitute a triggering event if the taxpayer demonstrates, to the satisfaction of the Commissioner, that the dual resident corporation's or separate unit's losses, expenses, or deductions cannot be used to offset income of another person under the laws of a foreign country at any time after the affiliated dual resident corporation or affiliated domestic owner ceases to be a member of the consolidated group;

(*3*) An unaffiliated dual resident corporation or unaffiliated domestic owner becomes a member of a consolidated group. Such affiliation of the dual resident corporation or domestic owner, however, shall not constitute a triggering event if the taxpayer demonstrates, to the satisfaction of the Commissioner, that the losses, expenses, or deductions of the dual resident corporation or separate unit cannot be used to offset the income of another person under the laws of a foreign country at any time after the dual resident corporation or domestic owner becomes a member of the consolidated group.

(*4*) A dual resident corporation transfers assets in a transaction that results, under the laws of a foreign country, in a carryover of its losses, expenses, or deductions. For purposes of this paragraph (g)(2)(iii)(A)(*4*), a transfer, either in a single transaction or a series of transactions within a twelve-month period, of 50% or more of the dual resident corporation's assets (measured by the fair market value of the assets at the time of such transfer (or for multiple transactions, at the time of the first transfer)) shall be deemed a triggering event, unless the taxpayer demonstrates, to the satisfaction of the Commissioner, that the transfer of assets did not result in a carryover under foreign law of the dual

resident corporation's losses, expenses, or deductions to the transferee of the assets;

(*5*) A domestic owner of a separate unit transfers assets of the separate unit in a transaction that results, under the laws of a foreign country, in a carryover of the separate unit's losses, expenses, or deductions. For purposes of this paragraph (g)(2)(iii)(A)(*5*), a transfer, either in a single transaction or a series of transactions over a twelve-month period, of 50% or more of the separate unit's assets (measured by the fair market value of the assets at the time of the transfer (or for multiple transfers, at the time of the first transfer)), shall be deemed a triggering event, unless the taxpayer demonstrates, to the satisfaction of the Commissioner, that the transfer of assets did not result in a carryover under foreign law of the separate unit's losses, expenses, or deductions to the transferee of the assets;

(*6*) An unaffiliated dual resident corporation or unaffiliated domestic owner becomes a foreign corporation by means of a transaction (e.g., a reorganization) that, for foreign tax purposes, is not treated as involving a transfer of assets (and carryover of losses) to a new entity. Such a transaction, however, shall not constitute a triggering event if the taxpayer demonstrates, to the satisfaction of the Commissioner, that the dual resident corporation's or separate unit's losses, expenses, or deductions cannot be used to offset income of another person under the laws of the foreign country at any time after the unaffiliated dual resident corporation or unaffiliated domestic owner becomes a foreign corporation.

(*7*) A domestic owner of a separate unit, either in a single transaction or a series of transactions within a twelve-month period, sells, or otherwise disposes of, 50% or more of the interest in the separate unit (measured by voting power or value) owned by the domestic owner on the last day of the taxable year in which the dual consolidated loss was incurred. For purposes of this paragraph (g)(2)(iii)(A)(*7*), the domestic owner shall be deemed to have disposed of its entire interest in a hybrid entity separate unit if such hybrid entity becomes classified as a foreign corporation for U.S. tax purposes. The disposition of 50% or more of the interest in a separate unit, however, shall not constitute a triggering event if the taxpayer demonstrates, to the satisfaction of the Commissioner, that the losses, expenses, or deductions of the separate unit cannot be used to offset income of another person under the laws of the foreign country at any time after the disposition of the interest in the separate unit; or

(*8*) The consolidated group, unaffiliated dual resident corporation, or unaffiliated domestic owner fails to file a certification required under paragraph (g)(2)(vi)(B) of this section.

(B) A taxpayer wishing to rebut the presumption of a triggering event described in paragraphs (g)(2)(iii)(A)(*2*) through (*7*) of this section, by demonstrating that the losses, expenses, or deductions of the dual resident corporation or separate unit cannot be carried over or otherwise used under the laws of the foreign country, must attach documents demonstrating such facts to its timely filed U.S. income tax return for the year in which the presumed triggering event occurs.

(C) The following example illustrates this paragraph (g)(2)(iii).

Example. DRC, a domestic corporation, is a member of CG, a consolidated group. DRC is a resident Country Y for Country Y income tax purposes. Therefore, DRC is a dual resident corporation. In Year 1, DRC incurs a dual consolidated loss of $100. CG files an agreement described in paragraph (g)(2) of this section and, thus, the $100 dual consolidated loss is included in the computation of CG's consolidated taxable income. In Year 6, all of the stock of DRC is sold to P, a domestic corporation that is a member of NG, another consolidated group. The sale of DRC to P is a triggering event under paragraph (g)(2)(iii)(A) of this section, requiring the recapture of the dual consolidated loss. However, the laws of Country Y provide for a five-year carryover period for losses. At the time of DRC's disaffiliation from CG, the losses, expenses and deductions that were included in the computation of the dual consolidated loss had expired for Country Y purposes. Therefore, upon adequate documentation that the losses, expenses, or deductions have expired for Country Y purposes, CG can rebut the presumption that a triggering event has occurred.

(iv) *Exceptions*—(A) *Acquisition by a member of the consolidated group.* The following events shall not constitute triggering events, requiring the recapture of the dual consolidated loss under paragraph (g)(2)(vii) of this section:

(*1*) An affiliated dual resident corporation or affiliated domestic owner ceases to be a member of a consolidated group solely by reason of a transaction in which a member of the same consolidated group succeeds to the tax attributes of the dual resident corporation or domestic owner under the provisions of section 381;

(*2*) Assets of an affiliated dual resident corporation or assets of a separate unit of an affiliated domestic owner are acquired by a member of its consolidated group in any other transaction; or

(*3*) An affiliated domestic owner of a separate unit transfers its interest in the separate unit to another member of its consolidated group.

(B) *Acquisition by an unaffiliated domestic corporation or a new consolidated group*—(*1*) If all the requirements of paragraph (g)(2)(iv)(B)(*3*) of this section are met, the following events shall not constitute triggering events requiring the recapture of the dual consolidated loss under paragraph (g)(2)(vii) of this section:

(*i*) An affiliated dual resident corporation or affiliated domestic owner becomes an unaffiliated domestic corporation or a member of a new consolidated group (other than in a transaction described in paragraph (g)(2)(iv)(B)(*2*)(*ii*) of this section);

(*ii*) Assets of a dual resident corporation or a separate unit are acquired by an unaffiliated domestic corporation or a member of a new consolidated group; or

(*iii*) A domestic owner of a separate unit transfers its interest in the separate unit to an unaffiliated domestic corporation or to a member of a new consolidated group.

(*2*) If the requirements of paragraph (g)(2)(iv)(B)(*3*)(*iii*) of this section are met, the following events shall not constitute triggering events requiring the recapture of the dual consolidated loss under paragraph (g)(2)(vii) of this section—

(*i*) An unaffiliated dual resident corporation or unaffiliated domestic owner becomes a member of a consolidated group;

(*ii*) A consolidated group that filed an agreement under this paragraph (g)(2) ceases to exist as a result of a transaction described in §1.1502–13(j)(5)(i) (other than a transaction in which any member of the terminating group, or the successor-in-interest of such member, is not a member of the surviving group immediately after the terminating group ceases to exist).

(*3*) If the following requirements (as applicable) are satisfied, the events listed in paragraphs (g)(2)(iv)(B)(*1*) and (*2*) of this section shall not constitute triggering events requiring recapture under paragraph (g)(2)(vii) of this section.

(*i*) The consolidated group, unaffiliated dual resident corporation, or unaffiliated domestic owner that filed the agreement under this paragraph (g)(2) and the unaffiliated domestic corporation or new consolidated group must enter into a closing agreement with the Internal Revenue Service providing that the consolidated group, unaffiliated dual resident corporation, or unaffiliated domestic owner and the unaffiliated domestic corporation or new consolidated group will be jointly and severally liable for the total amount of the recapture of dual consolidated loss and interest charge required in paragraph (g)(2)(vii) of this section, if there is a triggering event described in paragraph (g)(2)(iii) of this section;

(*ii*) The unaffiliated domestic corporation or new consolidated group must agree to treat any potential recapture amount under paragraph (g)(2)(vii) of this section as unrealized built-in gain for purposes of section 384(a), subject to any applicable exceptions thereunder;

(*iii*) The unaffiliated domestic corporation or new consolidated group must file, with its timely filed (including extensions) income tax return for the taxable year in which the event described in paragraph (g)(2)(iv)(B)(*1*) or (*2*) of this section occurs, an agreement described in paragraph (g)(2)(i) of this section (new (g)(2)(i) agreement),

whereby it assumes the same obligations with respect to the dual consolidated loss as the corporation or consolidated group that filed the original (g)(2)(i) agreement with respect to that loss. The new (g)(2)(i) agreement must be signed under penalties of perjury by the person who signs the return and must include a reference to this paragraph (g)(2)(iv)(B)(*3*)(*iii*). For taxable years beginning after December 31, 2002, the agreement attached to the return pursuant to the preceding sentence may be an unsigned copy. If an unsigned copy is attached to the return, the corporation or consolidated group must retain the original in its records in the manner specified by § 1.6001–1(e).

(C) *Subsequent triggering events.* Any triggering event described in paragraph (g)(2)(iii) of this section that occurs subsequent to one of the transactions described in paragraph (g)(2)(iv) (A) or (B) of this section and does not fall within the exceptions provided in paragraph (g)(2)(iv) (A) or (B) of this section shall require recapture under paragraph (g)(2)(vii) of this section.

(D) *Example.* The following example illustrates the application of paragraph (g)(2)(iv)(B)(*2*)(*ii*) of this section:

Example. (i) Facts. C is the common parent of a consolidated group (the C Group) that includes DRC, a domestic corporation. DRC is a dual resident corporation and incurs a dual consolidated loss in its taxable year ending December 31, Year 1. The C Group elects to be bound by the provisions of this paragraph (g)(2) with respect to the Year 1 dual consolidated loss. No member of the C Group incurs a dual consolidated loss in Year 2. On December 31, Year 2, stock of C is acquired by D in a transaction described in § 1.1502–13(j)(5)(i). As a result of the acquisition, all the C Group members, including DRC, become members of a consolidated group of which D is the common parent (the D Group).

(ii) Acquisition not a triggering event. Under paragraph (g)(2)(iv)(B)(*2*)(*ii*) of this section, the acquisition by D of the C Group is not an event requiring the recapture of the Year 1 dual consolidated loss of DRC, or the payment of an interest charge, as described in paragraph (g)(2)(vii) of this section, provided that the D Group files the new (g)(2)(i) agreement described in paragraph (g)(2)(iv)(B)(*3*)(*iii*) of this section.

(iii) Subsequent event. A triggering event occurs on December 31, Year 3, that requires recapture by the D Group of the dual consolidated loss that DRC incurred in Year 1, as well as the payment of an interest charge, as provided in paragraph (g)(2)(vii) of this section. Each member of the D Group, including DRC and the other former members of the C Group, is severally liable for the additional tax (and the interest charge) due upon the recapture of the dual consolidated loss of DRC.

(v) *Ordering rules for determining the foreign use of losses.* If the laws of a foreign country provide for the use of losses of a dual resident corporation to offset the income of another person but do not provide applicable rules for determining the order in which such losses are used to offset the income of another person in a taxable year, then for purposes of this section, the following rules shall govern:

(A) If under the laws of the foreign country the dual resident corporation has losses from different taxable years, the dual resident corporation shall be deemed to use first the losses from the earliest taxable year from which a loss may be carried forward or back for foreign law purposes.

(B) Any net loss, or income, that the dual resident corporation has in a taxable year shall first be used to offset net income, or loss, recognized by affiliates of the dual resident corporation in the same taxable year before any carryover of the dual resident corporation's losses is considered to be used to offset any income from the taxable year.

(C) Where different losses, expenses, or deductions (e.g., capital losses and ordinary losses) of a dual resident corporation incurred in the same taxable year are available to offset the income of another person, the different losses shall be deemed to offset such income on a pro rata basis.

Example. DRC, a domestic corporation, is taxed as a resident under the tax laws of Country Y. Therefore, DRC is a dual resident corporation. FA is a Country Y affiliate of DRC. Country Y's tax laws permit affiliated corporations to file a form of consolidated return. In Year 1, DRC incurs a capital loss of $80 which, for Country Y purposes, offsets completely $30 of capital gain recognized by FA. Neither corporation has any other taxable income or loss for the year. In Year 1 (and in other years), DRC recognizes the same amount of income for U.S. purposes as it does for Country Y purposes. Under paragraph (d)(1)(i) of this section, however, DRC's

$80 capital loss is not a dual consolidated loss. In Year 2, DRC incurs a net operating loss of $100, while FA incurs a net operating loss of $50. DRC's $100 loss is a dual consolidated loss. Since the dual consolidated loss is not used to offset the income of another person under Country Y law, DRC is permitted to file an agreement described in this paragraph (g)(2). In Year 3, DRC has a net operating loss of $10 and FA has capital gains of $60. For Country Y purposes, DRC's $10 net operating loss is used to offset $10 of FA's $60 capital gain. DRC's $10 loss is a dual consolidated loss. Because the loss is used to offset FA's income, DRC will not be able to file an agreement under this paragraph (g)(2) with respect to the loss. Country Y permits FA's remaining $50 of Year 3 income to be offset by carryover losses. However, Country Y has no applicable rules for determining which carryover losses from Years 1 and 2 are used to offset such income. Under the ordering rules of paragraph (g)(2)(v)(A) of this section, none of DRC's $100 Year 2 loss will be deemed to offset FA's remaining $50 of Year 3 income. Instead, the $50 of capital loss carryover from Year 1 will be considered to offset the income.

(vi) *Reporting requirements*—(A) *In general*. The consolidated group, unaffiliated dual resident corporation, or unaffiliated domestic owner must answer the applicable questions regarding dual consolidated losses on its U.S. income tax return filed for the year in which the dual consolidated loss is incurred and for each of the following fifteen taxable years.

(B) *Annual certification*. Except as provided in §1.1503–2(g)(2)(vi)(C), until and unless Form 1120 or the Schedules thereto contain questions pertaining to dual consolidated losses, the consolidated group, unaffiliated dual resident corporation, or unaffiliated domestic owner must file with its income tax return for each of the 15 taxable years following the taxable year in which the dual consolidated loss is incurred a certification that the losses, expenses, or deductions that make up the dual consolidated loss have not been used to offset the income of another person under the tax laws of a foreign country. For taxable years beginning before January 1, 2003, the annual certification must be signed under penalties of perjury by a person authorized to sign the agreement described in §1.1503–2(g)(2)(i). For taxable years beginning after December 31, 2002, the certification is verified by signing the return with which the certification is filed. The certification for a taxable year must identify the dual consolidated loss to which it pertains by setting forth the taxpayer's year in which the loss was incurred and the amount of such loss. In addition, the certification must warrant that arrangements have been made to ensure that the loss will not be used to offset the income of another person under the laws of a foreign country and that the taxpayer will be informed of any such foreign use of any portion of the loss. If dual consolidated losses of more than one taxable year are subject to the rules of this paragraph (g)(2)(vi)(B), the certifications for those years may be combined in a single document but each dual consolidated loss must be separately identified.

(C) *Exception*. A consolidated group or unaffiliated domestic owner is not required to file annual certifications under paragraph (g)(2)(vi)(B) of this section with respect to a dual consolidated loss of any separate unit other than a hybrid entity separate unit.

(vii) *Recapture of loss and interest charge*—(A) *Presumptive rule—(1) Amount of recapture*. Except as otherwise provided in this paragraph (g)(2)(vii), upon the occurrence of a triggering event described in paragraph (g)(2)(iii) of this section, the taxpayer shall recapture and report as gross income the total amount of the dual consolidated loss to which the triggering event applies on its income tax return for the taxable year in which the triggering event occurs (or, when the triggering event is a use of the loss for foreign tax purposes, the taxable year that includes the last day of the foreign tax year during which such use occurs).

(*2*) *Interest charge*. In connection with the recapture, the taxpayer shall pay an interest charge. Except as otherwise provided in this paragraph (g)(2)(vii), such interest shall be determined under the rules of section 6601(a) as if the additional tax owed as a result of the recapture had accrued and been due and owing for the taxable year in which the losses, expenses, or deductions taken into account in computing the dual consolidated loss gave rise to a tax benefit for U.S. income tax purposes.

For purposes of this paragraph (g)(2)(vii)(A)(*2*), a tax benefit shall be considered to have arisen in a taxable year in which such losses, expenses or deductions reduced U.S. taxable income.

(B) *Rebuttal of presumptive rule—(1) Amount of recapture.* The amount of dual consolidated loss that must be recaptured under this paragraph (g)(2)(vii) may be reduced if the taxpayer demonstrates, to the satisfaction of the Commissioner, the offset permitted by this paragraph (g)(2)(vii)(B). The reduction in the amount of recapture is the amount by which the dual consolidated loss would have offset other taxable income reported on a timely filed U.S. income tax return for any taxable year up to and including the year of the triggering event if such loss had been subject to the restrictions of paragraph (b) of this section (and therefore had been subject to the separate return limitation year restrictions of §§ 1.1502–21A(c) or 1.1502–21(c) (as appropriate) commencing in the taxable year in which the loss was incurred. A taxpayer utilizing this rebuttal rule must attach to its timely filed U.S. income tax return a separate accounting showing that the income for each year that offsets the dual resident corporation's or separate unit's recapture amount is attributable only to the dual resident corporation or separate unit.

(*2*) *Interest charge.* The interest charge imposed under this paragraph (g)(2)(vii) may be appropriately reduced if the taxpayer demonstrates, to the satisfaction of the Commissioner, that the net interest owed would have been less than that provided in paragraph (g)(2)(vii)(A)(*2*) of this section if the taxpayer had filed an amended return for the year in which the loss was incurred, and for any other affected years up to and including the year of recapture, treating the dual consolidated loss as a loss subject to the restrictions of paragraph (b) of this section (and therefore subject to the separate return limitation year restrictions of §§ 1.1502–21A(c) or 1.1502–21(c) (as appropriate). A taxpayer utilizing this rebuttal rule must attach to its timely filed U.S. income tax return a computation demonstrating the reduction in the net interest owed as a result of treating the dual consolidated loss as a loss subject to the restrictions of paragraph (b) of this section.

(C) *Computation of taxable income in year of recapture—(1) Presumptive rule.* Except as otherwise provided in paragraph (g)(2)(vii)(C)(*2*) of this section, for purposes of computing the taxable income for the year of recapture, no current, carryover or carryback losses of the dual resident corporation or separate unit, of other members of the consolidated group, or of the domestic owner that are not attributable to the separate unit, may offset and absorb the recapture amount.

(*2*) *Rebuttal of presumptive rule.* The recapture amount included in gross income may be offset and absorbed by that portion of the taxpayer's (consolidated or separate) net operating loss carryover that is attributable to the dual consolidated loss being recaptured, if the taxpayer demonstrates, to the satisfaction of the Commissioner, the amount of such portion of the carryover. A taxpayer utilizing this rebuttal rule must attach to its timely filed U.S. income tax return a computation demonstrating the amount of net operating loss carryover that, under this paragraph (g)(2)(vii)(C)(*2*), may absorb the recapture amount included in gross income.

(D) *Character and source of recapture income.* The amount recaptured under this paragraph (g)(2)(vii) shall be treated as ordinary income in the year of recapture. The amount recaptured shall be treated as income having the same source and falling within the same separate category for purposes of section 904 as the dual consolidated loss being recaptured.

(E) *Reconstituted net operating loss.* Commencing in the taxable year immediately following the year in which the dual consolidated loss is recaptured, the dual resident corporation or separate unit shall be treated as having a net operating loss in an amount equal to the amount actually recaptured under paragraph (g)(2)(vii) (A) or (B) of this section. This reconstituted net operating loss shall be subject to the restrictions of paragraph (b) of this section (and therefore, the separate return limitation year restrictions of §§ 1.1502–

21A(c) or 1.1502–21T(c) (as appropriate). The net operating loss shall be available only for carryover, under section 172(b), to taxable years following the taxable year of recapture. For purposes of determining the remaining carryover period, the loss shall be treated as if it had been recognized in the taxable year in which the dual consolidated loss that is the basis of the recapture amount was incurred.

(F) *Consequences of failing to comply with recapture provisions*—(*1*) *In general*. If the taxpayer fails to comply with the recapture provisions of this paragraph (g)(2)(vii) upon the occurrence of a triggering event, then the dual resident corporation or separate unit that incurred the dual consolidated loss (or a successor-in-interest) shall not be eligible for the relief provided in paragraph (g)(2) of this section with respect to any dual consolidated losses incurred in the five taxable years beginning with the taxable year in which recapture is required.

(*2*) *Exceptions*. In the case of a triggering event other than a use of the losses, expenses, or deductions taken into account in computing the dual consolidated loss to offset income of another person under the income tax laws of a foreign country, this rule shall not apply in the following circumstances:

(*i*) The failure to recapture is due to reasonable cause; or

(*ii*) A taxpayer seeking to rebut the presumption of a triggering event satisfies the filing requirements of paragraph (g)(2)(iii)(B) of this section.

(G) *Examples*. The following examples illustrate this paragraph (g)(2)(vii).

Example 1. P, a domestic corporation, files a consolidated return with DRC, a dual resident corporation. In Year 1, DRC incurs a dual consolidated loss of $100 and P earns $100. P files an agreement under this paragraph (g)(2). Therefore, the consolidated group is permitted to offset P's $100 of income with DRC's $100 loss. In Year 2, DRC earns $30, which is completely offset by a $30 net operating loss incurred by P. In Year 3, DRC earns income of $25 while P recognizes no income or loss. In addition, there is a triggering event in Year 3. Therefore, under the presumptive rule of paragraph (g)(2)(vii)(A) of this section, DRC must recapture $100. However, the $100 recapture amount may be reduced by $25 (the amount by which the dual consolidated loss would have offset other taxable income if it had been subject to the separate return limitation year restrictions from Year 1) upon adequate documentation of such offset under paragraph (g)(2)(vii)(B)(*1*) of this section. Commencing in Year 4, the $100 (or $75) recapture amount is treated as a loss incurred by DRC in a separate return limitation year, subject to the restrictions of §§ 1.1502–21A(c) or 1.1502–21(c), as appropriate. The carryover period of the loss, for purposes of section 172(b), will start from Year 1, when the dual consolidated loss was incurred.

Example 2. The facts are the same as in EXAMPLE 1, except that in Year 2, DRC earns $75 and P earns $50. In Year 3, DRC earns $25 while P earns $30. A triggering event occurs in Year 3. The $100 presumptive amount of recapture can be reduced to zero by the $75 and $25 earned by DRC in Years 2 and 3, respectively, upon adequate documentation of such offset under paragraph (g)(2)(vii)(B)(*1*) of this section. Nevertheless, an interest charge will be owed. Under the presumptive rule of paragraph (g)(2)(vii)(A)(*2*) of this section, interest will be charged on the additional tax owed on the $100 of recapture income as if the tax had accrued in Year 1 (the year in which the dual consolidated loss reduced the income of P). However, the net interest will be reduced to the amount that would have been owed if the consolidated group had filed amended returns, treating the dual consolidated loss as a loss subject to the separate return limitation year restrictions of § 1.1502–21A(c) or 1.1502–21(c), as appropriate, upon adequate documentation of such reduction of interest under paragraph (g)(2)(vii)(B)(*2*) of this section.

Example 3. P, a domestic corporation, owns DRC, a domestic corporation that is subject to the income tax laws of Country Z on a residence basis. DRC owns FE, a Country Z corporation. In Year 1, DRC incurs a net operating loss for U.S. tax purposes. Under the tax laws of Country Z, the loss is not recognized until Year 3. The Year 1 net operating loss is a dual consolidated loss under paragraph (c)(5) of this section. The consolidated group elects relief under paragraph (g)(2) of this section by filing the appropriate agreement and uses the dual consolidated loss on its U.S. income tax return. In Year 3, the dual consolidated loss is used under the laws of Country Z to offset the income of FE, which is a triggering event under paragraph (g)(2)(iii) of this section. However, the consolidated group does not recapture the dual consolidated loss. The consolidated group's failure to comply with the recapture provisions of this paragraph (g)(2)(vii) prevents DRC from being eligible for the relief provided under paragraph (g)(2) of this section for any dual consolidated losses incurred in Years 3 through 7, inclusive.

(h) *Effective date*—(1) *In general.* These regulations are effective for taxable years beginning on or after October 1, 1992. Section 1.1503–2A is effective for taxable years beginning after December 31, 1986, and before October 1, 1992. Paragraph (g)(2)(iv)(B)(*2*) of this section shall apply with respect to transactions otherwise constituting triggering events occurring on or after January 1, 2002.

(2) *Taxpayers that have filed for relief under § 1.1503–2A*—(i) *In general.* Except as provided in paragraph (h)(ii)(b) of this section, taxpayers that have filed agreements described in § 1.1503–2A(c)(3) or certifications described in § 1.1503–2A(d)(3) shall continue to be subject to the provisions of such agreements or certifications, including the amended return or recapture requirements applicable in the event of a triggering event, for the remaining term of such agreements or certifications.

(ii) *Special transition rule.* A taxpayer that has filed an agreement described in § 1.1503–2A(c)(3) or a certification described in § 1.1503–2A(d)(3) and that is in compliance with the provisions of § 1.1503–2A may elect to replace such agreement or certification with an agreement described in paragraph (g)(2)(i) of this section. However, a taxpayer making this election must replace all agreements and certifications filed under § 1.1503–2A. If the taxpayer is a consolidated group, the election must be made with respect to all dual resident corporations or separate units within the group. Likewise, if the taxpayer is an unaffiliated domestic owner, the election must be made with respect to all separate units of the domestic owner. The taxpayer must file the replacement agreement with its timely filed income tax return for its first taxable year commencing on or after October 1, 1992, stating that such agreement is a replacement for the agreement filed under § 1.1503–2A(c)(3) or the certification filed under § 1.1503–2A(d)(3) and identifying the taxable year for which the original agreement or certification was filed. A single agreement described in paragraph (g)(2)(i) of this section may be filed to replace more than one agreement or certification filed under § 1.1503–2A; however, each dual consolidated loss must be separately identified. A taxpayer may also elect to apply § 1.1503–2 for all open years, with respect to agreements filed under § 1.1503–2A(c)(3) or certifications filed under § 1.1503–2A(d)(3), in cases where the agreement or certification is no longer in effect and the taxpayer has complied with the provisions of § 1.1503–2A. For example, a taxpayer may have had a triggering event under § 1.1503–2A that is not a triggering event under § 1.1503–2. If the taxpayer fully complied with the requirements of the agreement entered into under § 1.1503–2A(c)(3) and filed amended U.S. income tax returns within the time required under § 1.1503–2A(c)(3), the taxpayer may file amended U.S. income tax returns consistent with the position that the earlier triggering event is no longer a triggering event.

(3) *Taxpayers that are in compliance with § 1.1503–2A but have not filed for relief thereunder.* A taxpayer that is in compliance with the provisions of § 1.1503–2A but has not filed an agreement described in § 1.1503–2A(c)(3) or a certification described in § 1.1503–2A(d)(3) may elect to have the provisions of § 1.1503–2 apply for any open year. In particular, a taxpayer may elect to apply the provisions of § 1.1503–2 in a case where the dual consolidated loss has been subjected to the separate return limitation year restrictions of § 1.1502–21A(c) or 1.1502–21(c) (as appropriate) but the losses, expenses, or deductions taken into account in computing the dual consolidated loss have not been used to offset the income of another person for foreign tax purposes. However, if a taxpayer is a consolidated group, the election must be made with respect to all dual resident corporations or separate units within the group. Likewise, if the taxpayer is an unaffiliated domestic owner, the election must be made with respect to all separate units of the domestic owner.

[T.D. 8434, 57 FR 41084, Sept. 9, 1992; 57 FR 48722, Oct. 28, 1992; 57 FR 57280, Dec. 3, 1992; 58 FR 13413, Mar. 11, 1993, as amended by T.D. 8597, 60 FR 36680, July 18, 1995; T.D. 8677, 61 FR 33325, June 27, 1996; T.D. 8823, 64 FR 36101, July 2, 1999; T.D. 9084, 68 FR 44617, July 30, 2003; T.D. 9100, 68 FR 70707, Dec. 19, 2003; T.D. 9300, 71 FR 71044, Dec. 8, 2006]

§ 1.1503(d)–0 Table of contents.

This section lists the captions contained in §§ 1.1503(d)–1 through 1.1503(d)–8.

§ 1.1503(d)–1 Definitions and special rules for filings under section 1503(d).

(a) In general.
(b) Definitions.
(1) Domestic corporation.
(2) Dual resident corporation.
(3) Hybrid entity.
(4) Separate unit.
(i) In general.
(ii) Separate unit combination rule.
(iii) Business operations that do not constitute a permanent establishment.
(iv) Foreign branch separate units held by dual resident corporations or hybrid entities in the same foreign country.
(5) Dual consolidated loss.
(6) Subject to tax.
(7) Foreign country.
(8) Consolidated group.
(9) Domestic owner.
(10) Affiliated dual resident corporation and affiliated domestic owner.
(11) Unaffiliated dual resident corporation, unaffiliated domestic corporation, and unaffiliated domestic owner.
(12) Domestic affiliate.
(13) Domestic use.
(14) Foreign use.
(15) Grantor trust.
(16) Transparent entity.
(i) In general.
(ii) Example.
(17) Disregarded entity.
(18) Partnership.
(19) Indirectly.
(20) Certification period.
(c) Special rules for filings under section 1503(d).
(1) Reasonable cause exception.
(2) Requirements for reasonable cause relief.
(i) Time of submission.
(ii) Notice requirement.
(3) Signature requirement.

§ 1.1503(d)–2 Domestic use.

§ 1.1503(d)–3 Foreign use.

(a) Foreign use.
(1) In general.
(2) Indirect use.
(i) General rule.
(ii) Exception.
(iii) Examples.
(3) Deemed use.
(b) Available for use.
(c) Exceptions.
(1) In general.
(2) Election or merger required to enable foreign use.
(3) Presumed use where no foreign country rule for determining use.
(4) Certain interests in partnerships or grantor trusts.
(i) General rule.
(ii) Combined separate unit.
(iii) Reduction in interest.
(5) De minimis reduction of an interest in a separate unit.
(i) General rule.
(ii) Limitations.
(iii) Reduction in interest.
(iv) Examples and coordination with exceptions to other triggering events.
(6) Certain asset basis carryovers.
(7) Assumption of certain liabilities.
(i) In general.
(ii) Ordinary course limitation.
(8) Multiple-party events.
(9) Additional guidance.
(d) Ordering rules for determining the foreign use of losses.
(e) Mirror legislation rule.
(1) In general.
(2) Stand-alone exception.
(i) In general.
(ii) Stand-alone domestic use agreement.
(iii) Termination of stand-alone domestic use agreement.

§ 1.1503(d)–4 Domestic use limitation and related operating rules.

(a) Scope.
(b) Limitation on domestic use of a dual consolidated loss.
(c) Effect of a dual consolidated loss on a consolidated group, unaffiliated dual resident corporation, or unaffiliated domestic owner.
(1) Dual resident corporation.
(2) Separate unit.
(3) SRLY limitation.
(4) Items of a dual consolidated loss used in other taxable years.
(5) Reconstituted net operating losses.
(d) Elimination of a dual consolidated loss after certain transactions.
(1) General rule.
(i) Transactions described in section 381(a).
(ii) Cessation of separate unit status.
(2) Exceptions.
(i) Certain section 368(a)(1)(F) reorganizations.
(ii) Acquisition of a dual resident corporation by another dual resident corporation.
(iii) Acquisition of a separate unit by a domestic corporation.
(A) Acquisition by a corporation that is not a member of the same consolidated group.
(B) Acquisition by a member of the same consolidated group.
(iv) Special rules for foreign insurance companies.
(e) Special rule denying the use of a dual consolidated loss to offset tainted income.
(1) In general.
(2) Tainted income.
(i) Definition.

(ii) Income presumed to be derived from holding tainted assets.
(3) Tainted assets defined.
(4) Exceptions.
(f) Computation of foreign tax credit limitation.

§ 1.1503(d)–5 Attribution of items and basis adjustments.

(a) In general.
(b) Determination of amount of income or dual consolidated loss of a dual resident corporation.
(1) In general.
(2) Exceptions.
(c) Determination of amount of income or dual consolidated loss attributable to a separate unit, and income or loss attributable to an interest in a transparent entity.
(1) In general.
(i) Scope and purpose.
(ii) Only items of domestic owner taken into account.
(iii) Separate application.
(2) Foreign branch separate unit.
(i) In general.
(ii) Principles of § 1.882–5.
(iii) Exception where foreign country attributes interest expense solely by reference to books and records.
(3) Hybrid entity separate unit and an interest in a transparent entity.
(i) General rule.
(ii) Interests in certain disregarded entities, partnerships, and grantor trusts owned by a hybrid entity or transparent entity.
(4) Special rules.
(i) Allocation of items between certain tiered separate units and interests in transparent entities.
(A) Foreign branch separate unit.
(B) Hybrid entity separate unit or interest in a transparent entity.
(ii) Combined separate unit.
(iii) Gain or loss on the direct or indirect disposition of a separate unit or an interest in a transparent entity.
(A) In general.
(B) Multiple separate units or interests in transparent entities.
(iv) Inclusions on stock.
(v) Foreign currency gain or loss recognized under section 987.
(vi) Recapture of dual consolidated loss.
(d) Foreign tax treatment disregarded.
(e) Items generated or incurred while a dual resident corporation, a separate unit, or a transparent entity.
(f) Assets and liabilities of a separate unit or an interest in a transparent entity.
(g) Basis adjustments.
(1) Affiliated dual resident corporation or affiliated domestic owner.
(2) Interests in hybrid entities that are partnerships or interests in partnerships through which a separate unit is owned indirectly.
(i) Scope.
(ii) Determination of basis of partner's interest.
(3) Combined separate units.

§ 1.1503(d)–6 Exceptions to the domestic use limitation rule.

(a) In general.
(1) Scope and purpose.
(2) Absence of foreign affiliate or foreign consolidation regime.
(3) Foreign insurance companies treated as domestic corporations.
(b) Elective agreement in place between the United States and a foreign country.
(1) In general.
(2) Application to combined separate units.
(c) No possibility of foreign use.
(1) In general.
(2) Statement.
(d) Domestic use election.
(1) In general.
(2) No domestic use election available if there is a triggering event in the year the dual consolidated loss is incurred.
(e) Triggering events requiring the recapture of a dual consolidated loss.
(1) Events.
(i) Foreign use.
(ii) Disaffiliation.
(iii) Affiliation.
(iv) Transfer of assets.
(v) Transfer of an interest in a separate unit.
(vi) Conversion to a foreign corporation.
(vii) Conversion to a regulated investment company, a real estate investment trust, or an S corporation.
(viii) Failure to certify.
(ix) Cessation of stand-alone status.
(2) Rebuttal.
(i) General rule.
(ii) Certain asset transfers.
(iii) Reporting.
(iv) Examples.
(f) Triggering event exceptions.
(1) Continuing ownership of assets or interests.
(i) Disaffiliation as a result of a transaction described in section 381.
(ii) Continuing ownership by consolidated group.
(iii) Continuing ownership by unaffiliated dual resident corporation or unaffiliated domestic owner.
(2) Transactions requiring a new domestic use agreement.
(i) Multiple-party events.
(ii) Events resulting in a single consolidated group.
(iii) Requirements.
(A) New domestic use agreement.
(B) Statement filed by original elector.
(3) Certain transfers qualifying for the de minimis exception to foreign use.

(4) Deemed transactions as a result of certain transfers that do not result in a foreign use.
(5) Compulsory transfers.
(6) Subsequent triggering events.
(g) Annual certification reporting requirement.
(h) Recapture of dual consolidated loss and interest charge.
(1) Presumptive rules.
(i) Amount of recapture.
(ii) Interest charge.
(2) Reduction of presumptive recapture amount and presumptive interest charge.
(i) Amount of recapture.
(ii) Interest charge.
(3) Rules regarding multiple-party event exceptions to triggering events.
(i) Scope.
(ii) Original elector and prior subsequent electors not subject to recapture or interest charge.
(iii) Recapture tax amount and required statement.
(A) In general.
(B) Recapture tax amount.
(iv) Tax assessment and collection procedures.
(A) In general.
(B) Collection from original elector and prior subsequent electors; joint and several liability.
(C) Allocation of partial payments of tax.
(D) Refund.
(v) Definition of income tax liability.
(vi) Example.
(4) Computation of taxable income in year of recapture.
(i) Presumptive rule.
(ii) Exception to presumptive rule.
(5) Character and source of recapture income.
(6) Reconstituted net operating loss.
(i) General rule.
(ii) Exception.
(iii) Special rule for recapture following multiple-party event exception to a triggering event.
(i) [Reserved]
(j) Termination of domestic use agreement and annual certifications.
(1) Rebuttals, exceptions to triggering events, and recapture.
(2) Termination of ability for foreign use.
(i) In general.
(ii) Statement.
(3) Agreements filed in connection with stand-alone exception.

§ 1.1503(d)–7 Examples.

(a) In general.
(b) Presumed facts for examples.
(c) Examples.

§ 1.1503(d)–8 Effective dates.

(a) General rule.
(b) Special rules.
(1) Reduction of term of agreements filed under §§ 1.1503–2A(c)(3), 1.1503–2A(d)(3), 1.1503–2(g)(2)(i), or 1.1503–2T(g)(2)(i).
(2) Reduction of term of agreements filed under §§ 1.1503–2(g)(2)(iv)(B)(*2*)(*i*) (1992), 1.1503–2(g)(2)(iv)(B)(*3*)(*i*), or Rev. Proc. 2000–42.
(3) Relief for untimely filings.
(i) General rule.
(ii) Closing agreements.
(iii) Pending requests for relief.
(4) Multiple-party event exception to triggering events.
(5) Basis adjustment rules.

[T.D. 9315, 72 FR 12914, Mar. 19, 2007; 72 FR 20424, Apr. 23, 2007]

§ 1.1503(d)–1 Definitions and special rules for filings under section 1503(d).

(a) *In general.* This section and §§ 1.1503(d)–2 through 1.1503(d)–8 provide rules concerning the determination and use of dual consolidated losses pursuant to section 1503(d). Paragraph (b) of this section provides definitions that apply for purposes of this section and §§ 1.1503(d)–2 through 1.1503(d)–8. Paragraph (c) of this section provides a reasonable cause exception and a signature requirement for filings.

(b) *Definitions.* The following definitions apply for purposes of this section and §§ 1.1503(d)–2 through 1.1503(d)–8:

(1) *Domestic corporation* means an entity classified as a domestic corporation under section 7701(a)(3) and (4) or otherwise treated as a domestic corporation by the Internal Revenue Code, including, but not limited to, sections 269B, 953(d), 1504(d), and 7874. However, solely for purposes of section 1503(d), the term domestic corporation shall not include a regulated investment company as defined in section 851, a real estate investment trust as defined in section 856, or an S corporation as defined in section 1361.

(2) *Dual resident corporation* means—

(i) A domestic corporation that is subject to an income tax of a foreign country on its worldwide income or on a residence basis. A corporation is taxed on a residence basis if it is taxed as a resident under the laws of the foreign country; and

(ii) A foreign insurance company that makes an election to be treated as a domestic corporation pursuant to section 953(d) and is treated as a member

of an affiliated group for purposes of chapter 6, even if such company is not subject to an income tax of a foreign country on its worldwide income or on a residence basis. See section 953(d)(3).

(3) *Hybrid entity* means an entity that is not taxable as an association for Federal tax purposes, but is subject to an income tax of a foreign country as a corporation (or otherwise at the entity level) either on its worldwide income or on a residence basis.

(4) *Separate unit*—(i) *In general*. The term *separate unit* means either of the following that is carried on or owned, as applicable, directly or indirectly, by a domestic corporation (including a dual resident corporation):

(A) Except to the extent provided in paragraph (b)(4)(iii) of this section, a business operation outside the United States that, if carried on by a U.S. person, would constitute a foreign branch as defined in §1.367(a)–6T(g)(1) (foreign branch separate unit).

(B) An interest in a hybrid entity (hybrid entity separate unit).

(ii) *Separate unit combination rule*. Except as otherwise provided in this paragraph, if a domestic owner, or two or more domestic owners that are members of the same consolidated group, have two or more separate units (individual separate units), then all such individual separate units that are located (in the case of a foreign branch separate unit) or subject to an income tax either on their worldwide income or on a residence basis (in the case of a hybrid entity an interest in which is a hybrid entity separate unit) in the same foreign country shall be treated as one separate unit (combined separate unit). See §1.1503(d)–7(c) *Example 1*. Separate units of a foreign insurance company that is a dual resident corporation under paragraph (b)(2)(ii) of this section, however, shall not be combined with separate units of any other domestic corporation. Except as specifically provided in this section or §§1.1503(d)–2 through 1.1503(d)–8, any individual separate unit composing a combined separate unit loses its character as an individual separate unit.

(iii) *Business operations that do not constitute a permanent establishment*. A business operation carried on by a domestic corporation that is not a dual resident corporation shall not constitute a foreign branch separate unit, provided the business operation:

(A) Is not carried on indirectly through a hybrid entity or a transparent entity; and

(B) Is conducted in a country with which the United States has entered into an income tax convention and is not treated as a permanent establishment pursuant to that convention, or is not otherwise subject to tax on a net basis under that convention. See §1.1503(d)–7(c) *Example 2*.

(iv) *Foreign branch separate units held by dual resident corporations or hybrid entities in the same foreign country*. A foreign branch separate unit may be owned by a dual resident corporation, or through a hybrid entity (an interest in which is a separate unit), even where the foreign branch is located in the same foreign country that subjects such dual resident corporation or hybrid entity to tax on its worldwide income or on a residence basis. But see the rule under paragraph (b)(4)(ii) of this section that combines certain same-country hybrid entity separate units and foreign branch separate units. See also §1.1503(d)–7(c) *Example 1*.

(5) *Dual consolidated loss* means—

(i) In the case of a dual resident corporation, and except to the extent provided in §1.1503(d)–5(b), the net operating loss (as defined in section 172(c) and the related regulations) incurred in a year in which the corporation is a dual resident corporation; and

(ii) In the case of a separate unit, the net loss attributable to the separate unit under §1.1503(d)–5(c) through (e).

(6) *Subject to tax*. For purposes of determining whether a domestic corporation or another entity is subject to an income tax of a foreign country on its income, the fact that it has no actual income tax liability to the foreign country for a particular taxable year shall not be taken into account.

(7) *Foreign country* includes any possession of the United States.

(8) *Consolidated group* has the meaning provided in §1.1502–1(h).

(9) *Domestic owner* means—

(i) A domestic corporation (including a dual resident corporation) that has one or more separate units or interests in a transparent entity; and

(ii) In the case of a combined separate unit, a domestic corporation (including a dual resident corporation) that has one or more individual separate units that are treated as part of the combined separate unit under paragraph (b)(4)(ii) of this section.

(10) *Affiliated dual resident corporation* and *affiliated domestic owner* mean a dual resident corporation and a domestic owner, respectively, that is a member of a consolidated group.

(11) *Unaffiliated dual resident corporation*, *unaffiliated domestic corporation*, and *unaffiliated domestic owner* mean a dual resident corporation, domestic corporation, and domestic owner, respectively, that is not a member of a consolidated group.

(12) *Domestic affiliate* means—

(i) A member of an affiliated group, without regard to the exceptions contained in section 1504(b) (other than section 1504(b)(3)) relating to includible corporations;

(ii) A domestic owner;

(iii) A separate unit; or

(iv) An interest in a transparent entity, as defined in paragraph (b)(16) of this section.

(13) *Domestic use*. See § 1.1503(d)–2.

(14) *Foreign use*. See § 1.1503(d)–3.

(15) *Grantor trust* means a trust, any portion of which is treated as being owned by the grantor or another person under subpart E of subchapter J of this chapter.

(16) *Transparent entity*—(i) *In general*. The term *transparent entity* means an entity described in this paragraph (b)(16) where all or a portion of its interests are owned, directly or indirectly, by a domestic corporation. An entity is described in this paragraph (b)(16) if the entity—

(A) Is not taxable as an association for Federal tax purposes;

(B) Is not subject to income tax in a foreign country as a corporation (or otherwise at the entity level) either on its worldwide income or on a residence basis; and

(C) Is not a pass-through entity under the laws of the applicable foreign country. For purposes of applying the preceding sentence, the applicable foreign country is the foreign country in which the relevant foreign branch separate unit is located, or the foreign country that subjects the relevant hybrid entity (an interest in which is a separate unit) or dual resident corporation to an income tax either on its worldwide income or on a residence basis.

(ii) *Example*. A U.S. limited liability company (LLC) does not elect to be taxed as an association for Federal tax purposes and is not subject to income tax in a foreign country as a corporation (or otherwise at the entity level) either on its worldwide income or on a residence basis. The LLC is owned by a hybrid entity (an interest in which is a separate unit) that is the relevant hybrid entity. Provided the LLC is not treated as a pass-through entity by the applicable foreign country that subjects the relevant hybrid entity to an income tax either on its worldwide income or on a residence basis, the LLC would qualify as a transparent entity. See also § 1.1503(d)–7(c) *Example 26*.

(17) *Disregarded entity* means an entity that is disregarded as an entity separate from its owner, under §§ 301.7701–1 through 301.7701–3 of this chapter, for Federal tax purposes.

(18) *Partnership* means an entity that is classified as a partnership, under §§ 301.7701–1 through 301.7701–3 of this chapter, for Federal tax purposes.

(19) *Indirectly*, when used in reference to ownership, means ownership through a partnership, a disregarded entity, or a grantor trust, regardless of whether the partnership, disregarded entity, or grantor trust is a U.S. person.

(20) *Certification period* means the period of time up to and including the fifth taxable year following the year in which the dual consolidated loss that is the subject of a domestic use agreement (as described in § 1.1503(d)–6(d)(1)) was incurred.

(c) *Special rules for filings under section 1503(d)*—(1) *Reasonable cause exception*. A person that is permitted or required to file an election, agreement, statement, rebuttal, computation, or other information pursuant to section 1503(d) and these regulations, that fails to make such filing in a timely manner, shall be considered to have satisfied the timeliness requirement with respect to such filing if the person is

able to demonstrate, to the Area Director, Field Examination, Small Business/Self Employed or the Director of Field Operations, Large and Mid-Size Business (Director) having jurisdiction of the taxpayer's tax return for the taxable year, that such failure was due to reasonable cause and not willful neglect. In determining whether the taxpayer has reasonable cause, the Director shall consider whether the taxpayer acted reasonably and in good faith. In general, the taxpayer must demonstrate that it exercised ordinary care and prudence in meeting its tax obligations but nonetheless did not comply with the prescribed duty within the prescribed time. Whether the taxpayer acted reasonably and in good faith will be determined after considering all the facts and circumstances. The Director shall notify the person in writing within 120 days of the filing if it is determined that the failure to comply was not due to reasonable cause, or if additional time will be needed to make such determination. For this purpose, the 120-day period shall begin on the date the taxpayer is notified in writing that the request has been received and assigned for review. If, once such period commences, the taxpayer is not again notified within 120 days, then the taxpayer shall be deemed to have established reasonable cause. The reasonable cause exception of this paragraph (c) shall only apply if, once the person becomes aware of its failure to file the election, agreement, statement, rebuttal, computation or other information in a timely manner, the person complies with the requirements of paragraph (c)(2) of this section.

(2) *Requirements for reasonable cause relief*—(i) *Time of submission*. Requests for reasonable cause relief will only be considered if once the person becomes aware of the failure to file the election, agreement, statement, rebuttal, computation or other information, the person attaches all the documents that should have been filed, as well as a written statement setting forth the reasons for the failure to timely comply, to an amended return that amends the return to which the documents should have been attached pursuant to the rules of section 1503(d) and these regulations.

(ii) *Notice requirement*. In addition to the requirements of paragraph (c)(2)(i) of this section, the taxpayer must provide a copy of the amended return and all required attachments to the Director as follows:

(A) If the taxpayer is under examination for any taxable year when the taxpayer requests relief, the taxpayer must provide a copy of the amended return and attachments to the personnel conducting the examination.

(B) If the taxpayer is not under examination for any taxable year when the taxpayer requests relief, the taxpayer must provide a copy of the amended return and attachments to the Director having jurisdiction of the taxpayer's return.

(3) *Signature requirement*. When an election, agreement, statement, rebuttal, computation, or other information is required pursuant to section 1503(d) and these regulations to be attached to and filed by the due date (including extensions) of a U.S. tax return and signed under penalties of perjury by the person who signs the return, the attachment and filing of an unsigned copy is considered to satisfy such requirement, provided the taxpayer retains the original in its records in the manner specified by § 1.6001–1(e).

[T.D. 9315, 72 FR 12914, Mar. 19, 2007]

§ 1.1503(d)–2 Domestic use.

A *domestic use* of a dual consolidated loss shall be deemed to occur when the dual consolidated loss is made available to offset, directly or indirectly, the income of a domestic affiliate (other than the dual resident corporation or separate unit that, in each case, incurred the dual consolidated loss) in the taxable year in which the dual consolidated loss is recognized, or in any other taxable year, regardless of whether the dual consolidated loss offsets income under the income tax laws of a foreign country and regardless of whether any income that the dual consolidated loss may offset in the foreign country is, has been, or will be subject to tax in the United States. A domestic use shall be deemed to occur in the year the dual consolidated loss is included in the computation of the taxable income of a consolidated group, unaffiliated dual resident corporation,

or an unaffiliated domestic owner, as applicable, even if no tax benefit results from such inclusion in that year. See § 1.1503(d)–7(c) *Examples 2* through *4*.

[T.D. 9315, 72 FR 12914, Mar. 19, 2007]

§ 1.1503(d)–3 Foreign use.

(a) *Foreign use*—(1) *In general*. Except as provided in paragraph (c) of this section, a *foreign use* of a dual consolidated loss shall be deemed to occur when any portion of a deduction or loss taken into account in computing the dual consolidated loss is made available under the income tax laws of a foreign country to offset or reduce, directly or indirectly, any item that is recognized as income or gain under such laws and that is, or would be, considered under U.S. tax principles to be an item of—

(i) A foreign corporation as defined in section 7701(a)(3) and (a)(5); or

(ii) A direct or indirect owner of an interest in a hybrid entity, provided such interest is not a separate unit. See § 1.1503(d)–7(c) *Examples 5* through *10* and *37*.

(2) *Indirect use*—(i) *General rule*. Except to the extent provided in paragraph (a)(2)(ii) of this section, an item of deduction or loss shall be deemed to be made available indirectly if—

(A) One or more items are taken into account as deductions or losses for foreign tax purposes, but do not give rise to corresponding items of income or gain for U.S. tax purposes; and

(B) The item or items described in paragraph (a)(2)(i)(A) of this section have the effect of making an item of deduction or loss composing the dual consolidated loss available for a foreign use as described in paragraph (a)(1) of this section.

(ii) *Exception*. The general rule provided in paragraph (a)(2)(i) of this section shall not apply if the consolidated group, unaffiliated domestic owner, or unaffiliated dual resident corporation demonstrates, to the satisfaction of the Commissioner, that the item or items described in paragraph (a)(2)(i)(A) of this section that gave rise to the indirect foreign use—

(A) Were not incurred, or taken into account, with a principal purpose of avoiding the provisions of section 1503(d). For purposes of this paragraph (a)(2)(ii), an item incurred or taken into account as interest for foreign tax purposes, but disregarded for U.S. tax purposes, shall be deemed to have been incurred, or taken into account, with a principal purpose of avoiding the provisions of section 1503(d). Similarly, for purposes of this paragraph (a)(2)(ii), an item incurred or taken into account as the result of an instrument that is treated as debt for foreign tax purposes and equity for U.S. tax purposes, shall be deemed to have been incurred, or taken into account, with a principal purpose of avoiding the provisions of section 1503(d); and

(B) Were incurred, or taken into account, in the ordinary course of the dual resident corporation's or separate unit's trade or business.

(iii) *Examples*. See § 1.1503(d)–7(c) *Examples 6* through *8*.

(3) *Deemed use*. See paragraph (e) of this section for a deemed foreign use pursuant to the mirror legislation rule.

(b) *Available for use*. A foreign use shall be deemed to occur in the year in which any portion of a deduction or loss taken into account in computing the dual consolidated loss is made available for an offset described in paragraph (a) of this section, regardless of whether it actually offsets or reduces any items of income or gain under the income tax laws of the foreign country in such year, and regardless of whether any of the items that may be so offset or reduced are regarded as income under U.S. tax principles.

(c) *Exceptions*—(1) *In general*. Paragraphs (c)(2) through (9) of this section provide exceptions to the general definition of foreign use set forth in paragraphs (a) and (b) of this section. These exceptions only apply to a foreign use that occurs solely as a result of the conditions or circumstances described therein, and do not apply if a foreign use occurs in any other case or by any other means. For example, the exception under paragraph (c)(4) of this section (regarding certain interests in partnerships or grantor trusts) shall not apply where the item of deduction or loss is made available through a foreign consolidation regime (or similar method). In addition, these exceptions

do not apply when attempting to demonstrate that no foreign use of a dual consolidated loss can occur in any other year by any means under § 1.1503(d)–6(c), (e)(2)(i), or (j)(2). But see § 1.1503(d)–6(e)(2)(ii), which takes into account the exception under paragraph (c)(7) of this section for purposes of rebutting certain asset transfers.

(2) *Election or merger required to enable foreign use.* Where the laws of a foreign country provide an election that would enable a foreign use, a foreign use shall be considered to occur only if the election is made. Similarly, where the laws of a foreign country would enable a foreign use through a sale, merger, or similar transaction, a foreign use shall be considered to occur only if the sale, merger, or similar transaction occurs.

(3) *Presumed use where no foreign country rule for determining use.* This paragraph (c)(3) applies if the losses or deductions composing the dual consolidated loss are made available under the laws of a foreign country both to offset income that would constitute a foreign use and to offset income that would not constitute a foreign use, and the laws of the foreign country do not provide applicable rules for determining which income is offset by the losses or deductions. In such a case, the losses or deductions shall be deemed to be made available to offset the income that does not constitute a foreign use, to the extent of such income, before being considered to be made available to offset the income that does constitute a foreign use. See § 1.1503(d)–7(c) *Example 11.*

(4) *Certain interests in partnerships or grantor trusts*—(i) *General rule.* Except to the extent provided in paragraph (c)(4)(iii) of this section, this paragraph (c)(4)(i) applies to a dual consolidated loss attributable to an interest in a hybrid entity partnership or a hybrid entity grantor trust, or to a separate unit owned indirectly through a partnership or grantor trust. In such a case, a foreign use will not be considered to occur if the foreign use is solely the result of another person's ownership of an interest in the partnership or grantor trust, as applicable, and the allocation or carry forward of an item of deduction or loss composing such dual consolidated loss as a result of such ownership. See § 1.1503(d)–7(c) *Example 13.*

(ii) *Combined separate unit.* This paragraph applies to a dual consolidated loss attributable to a combined separate unit that includes an individual separate unit to which paragraph (c)(4)(i) of this section would apply, but for the application of the separate unit combination rule provided under § 1.1503(d)–1(b)(4)(ii). In such a case, paragraph (c)(4)(i) of this section shall apply to the portion of the dual consolidated loss of such combined separate unit that is attributable, as provided under § 1.1503(d)–5(c) through (e), to the individual separate unit (otherwise described in paragraph (c)(4)(i) of this section) that is a component of the combined separate unit. See § 1.1503(d)–7(c) *Example 14.*

(iii) *Reduction in interest.* The exception under paragraph (c)(4)(i) of this section shall not apply if, at any time following the year in which the dual consolidated loss is incurred, there is more than a *de minimis* reduction in the domestic owner's percentage interest in the partnership or grantor trust, as applicable, as described in paragraph (c)(5) of this section. In such a case, a foreign use shall be deemed to occur at the time the reduction in interest exceeds the *de minimis* amount. See § 1.1503(d)–7(c) *Example 13.*

(5) *De minimis reduction of an interest in a separate unit*—(i) *General rule.* This paragraph applies to a *de minimis* reduction of a domestic owner's interest in a separate unit (including an interest described in paragraph (c)(4)(i) of this section). Except to the extent provided in paragraph (c)(5)(ii) of this section, no foreign use shall be considered to occur with respect to a dual consolidated loss as a result of an item of deduction or loss composing such dual consolidated loss being made available solely as a result of a reduction in the domestic owner's interest in the separate unit, as provided under paragraph (c)(5)(iii) of this section. See § 1.1503(d)–7(c) *Example 5.*

(ii) *Limitations.* The exception provided in paragraph (c)(5)(i) of this section shall not apply if—

(A) During any 12-month period the domestic owner's percentage interest in the separate unit is reduced by 10

percent or more, as determined by reference to the domestic owner's interest at the beginning of the 12-month period; or

(B) At any time the domestic owner's percentage interest in the separate unit is reduced by 30 percent or more, as determined by reference to the domestic owner's interest at the end of the taxable year in which the dual consolidated loss was incurred.

(iii) *Reduction in interest.* The following rules apply for purposes of paragraphs (c)(4) and (5) of this section. A reduction of a domestic owner's interest in a separate unit shall include a reduction resulting from another person acquiring through sale, exchange, contribution, or other means, an interest in the foreign branch or hybrid entity, as applicable. A reduction may occur either directly or indirectly, including through an interest in a partnership, a disregarded entity, or a grantor trust through which a separate unit is carried on or owned. In the case of an interest in a hybrid entity partnership or a separate unit all or a portion of which is carried on or owned through a partnership, an interest in such separate unit (or portion of such separate unit) is determined by reference to the owner's interest in the profits or the capital in the separate unit. In the case of an interest in a hybrid entity grantor trust or a separate unit all or a portion of which is carried on or owned through a grantor trust, an interest in such separate unit (or portion of such separate unit) is determined by reference to the domestic owner's share of the assets and liabilities of the separate unit.

(iv) *Examples and coordination with exceptions to other triggering events.* See §1.1503(d)–7(c) *Examples 5*, *13*, and *14*. See also §1.1503(d)–6(f)(3) and (f)(5) for rules that coordinate the de minimis exception to foreign use with exceptions to other triggering events described in §1.1503(d)–6(e)(1), and provide an exception to foreign use following certain compulsory transfers.

(6) *Certain asset basis carryovers.* No foreign use shall be considered to occur with respect to a dual consolidated loss solely as a result of items of deduction or loss composing such dual consolidated loss being made available as a result of the transfer of assets of a dual resident corporation or separate unit, provided—

(i) Such items of loss and deduction are made available solely as a result of the basis of the transferred assets being determined, under foreign law, in whole or in part by reference to the basis of the assets in the hands of the dual resident corporation or separate unit;

(ii) The aggregate adjusted basis, as determined under U.S. tax principles, of all the assets so transferred during any 12-month period is less than 10 percent of the aggregate adjusted basis, as determined under U.S. tax principles, of all the dual resident corporation's or separate unit's assets, determined by reference to the assets held at the beginning of such 12-month period; and

(iii) The aggregate adjusted basis, as determined under U.S. tax principles, of all the assets so transferred at any time is less than 30 percent of the aggregate adjusted basis, as determined under U.S. tax principles, of all the dual resident corporation's or separate unit's assets, determined by reference to the assets held at the end of the taxable year in which the dual consolidated loss was generated. See §1.1503(d)–7(c) *Example 15*.

(7) *Assumption of certain liabilities*—(i) *In general.* Except to the extent provided in paragraph (c)(7)(ii) of this section, no foreign use shall be considered to occur with respect to any dual consolidated loss solely as a result of an item of deduction or loss composing such dual consolidated loss being made available following the assumption of liabilities of a dual resident corporation or separate unit, provided such availability arises solely as the result of an item of deduction or loss incurred with respect to, or as a result of, such liabilities. See §1.1503(d)–7(c) *Example 16*.

(ii) *Ordinary course limitation.* Paragraph (c)(7)(i) of this section shall apply only to the extent the liabilities assumed were incurred in the ordinary course of the dual resident corporation's, or separate unit's, trade or business. For purposes of this paragraph, liabilities incurred in the ordinary course of a trade or business shall include debt incurred to finance the

trade or business of the dual resident corporation or separate unit.

(8) *Multiple-party events.* This paragraph applies to a transaction that qualifies for the triggering event exception described in §1.1503(d)–6(f)(2)(i)(B) where the acquiring unaffiliated domestic corporation or consolidated group owns, directly or indirectly, more than 90 percent, but less than 100 percent, of the transferred assets or interests immediately after the transaction. In such a case, no foreign use shall be considered to occur with respect to a dual consolidated loss of the dual resident corporation or separate unit whose assets or interests were acquired, solely as a result of the less than 10 percent direct or indirect ownership of the acquired assets or interests by persons other than the acquiring unaffiliated domestic corporation or consolidated group, as applicable, immediately after the transaction. See §1.1503(d)–7(c) *Example 37.*

(9) *Additional guidance.* The Commissioner may provide, by guidance published in the Internal Revenue Bulletin, that certain events or transactions do or do not result in a foreign use. Such guidance may also modify the triggering events and rebuttals described in §1.1503(d)–6(e), and the exceptions thereto under §1.1503(d)–6(f), as appropriate.

(d) *Ordering rules for determining the foreign use of losses.* If the laws of a foreign country provide for the foreign use of losses of a dual resident corporation or a separate unit, but do not provide applicable rules for determining the order in which such losses are used in a taxable year, the following rules shall apply:

(1) Any net loss, or net income, that the dual resident corporation or separate unit has in a taxable year shall first be used to offset net income, or loss, recognized by its affiliates in the same taxable year before any carry over of its losses is considered to be used to offset any income from the taxable year.

(2) If under the laws of the foreign country the dual resident corporation or separate unit has losses from different taxable years, it shall be deemed to use first the losses which would not constitute a triggering event that would result in the recapture of a dual consolidated loss pursuant to §1.1503(d)–6(h). Thereafter, it shall be deemed to use first the losses from the most recent taxable year from which a loss may be carried forward or back for foreign law purposes.

(3) Where different losses or deductions (for example, capital losses and ordinary losses) of a dual resident corporation or separate unit incurred in the same taxable year are available for foreign use, the different losses shall be deemed to be used on a pro rata basis. See §1.1503(d)–7(c) *Example 12.*

(e) *Mirror legislation rule*—(1) *In general.* Except as provided in paragraph (e)(2) of this section and §1.1503(d)–6(b) (relating to agreements entered into between the United States and a foreign country), a foreign use shall be deemed to occur if the income tax laws of a foreign country would deny any opportunity for the foreign use of the dual consolidated loss in the year in which the dual consolidated loss is incurred (mirror legislation), determined by assuming that such foreign country had recognized the dual consolidated loss in such year, for any of the following reasons:

(i) The dual resident corporation or separate unit that incurred the loss is subject to income taxation by another country (for example, the United States) on its worldwide income or on a residence basis.

(ii) The loss may be available to offset income (other than income of the dual resident corporation or separate unit) under the laws of another country (for example, the United States).

(iii) The deductibility of any portion of a deduction or loss taken into account in computing the dual consolidated loss depends on whether such amount is deductible under the laws of another country (for example, the United States). See §1.1503(d)–7(c) *Examples 17* through *19.*

(2) *Stand-alone exception*—(i) *In general.* This paragraph (e)(2) applies if, in the absence of the mirror legislation described in paragraph (e)(1) of this section, no item of deduction or loss composing the dual consolidated loss of such dual resident corporation or separate unit would otherwise be available for a foreign use in the taxable year in

which such dual consolidated loss is incurred. This determination is made without regard to whether such availability is limited by election (or other similar procedure). However, for purposes of this paragraph (e)(2)(i), no item of deduction or loss composing the dual consolidated loss of a dual resident corporation or separate unit is considered to be made available for foreign use solely because the laws of a foreign country would enable a foreign use through a sale, merger, or similar transaction (provided no such sale, merger, or similar transaction actually occurs). In such a case, no foreign use shall be considered to occur pursuant to paragraph (e)(1) of this section with respect to the dual consolidated loss, provided the requirements of paragraph (e)(2)(ii) of this section are satisfied. See §1.1503(d)–7(c) *Examples 17* through *19*.

(ii) *Stand-alone domestic use agreement*. In order to qualify for the exception under paragraph (e)(2)(i) of this section, the consolidated group, unaffiliated dual resident corporation, or unaffiliated domestic owner, as the case may be, must enter into a domestic use agreement in accordance with the provisions of §1.1503(d)–6(d) and, in addition, must include the following items in such domestic use agreement:

(A) A statement that the document is also being submitted under the provisions of paragraph (e)(2) of this section.

(B) A certification that the conditions of paragraph (e)(2)(i) of this section are satisfied during the taxable year in which the dual consolidated loss is incurred.

(C) An agreement to include with each annual certification required under §1.1503(d)–6(g), a certification that the conditions described in paragraph (e)(2)(i) of this section are satisfied during the taxable year of each such certification.

(iii) *Termination of stand-alone domestic use agreement*. This paragraph (e)(2)(iii) applies to a consolidated group, unaffiliated dual resident corporation, or unaffiliated domestic owner, as the case may be, that entered into a domestic use agreement pursuant to paragraph (e)(2)(ii) of this section, with respect to a dual consolidated loss, and which subsequently makes an election pursuant to §1.1503(d)–6(b) (relating to agreements entered into between the United States and a foreign country) with respect to such dual consolidated loss. In such a case, the dual consolidated loss shall be subject to the election under §1.1503(d)–6(b) (and any related agreements, representations and conditions), and the domestic use agreement entered into pursuant to paragraph (e)(2)(ii) of this section shall terminate and have no further effect.

[T.D. 9315, 72 FR 12914, Mar. 19, 2007]

§1.1503(d)–4 Domestic use limitation and related operating rules.

(a) *Scope*. This section prescribes rules that apply when the general limitation on the domestic use of a dual consolidated loss under paragraph (b) of this section applies. Thus, the rules of this section do not apply when an exception to the domestic use limitation applies (for example, as a result of a domestic use election under §1.1503(d)–6(d)). In general, when the domestic use limitation applies, the dual consolidated loss of a dual resident corporation or separate unit is subject to the separate return limitation year (SRLY) provisions of §1.1502–21(c), as modified under this section. Paragraph (c) of this section provides rules that determine the effect of a dual consolidated loss on a consolidated group, an unaffiliated dual resident corporation, or an unaffiliated domestic owner. Paragraph (d) of this section provides rules that eliminate dual consolidated losses following certain transactions or events. Paragraph (e) of this section contains provisions that prevent dual consolidated losses from offsetting tainted income. Finally, paragraph (f) of this section provides rules for computing foreign tax credits.

(b) *Limitation on domestic use of a dual consolidated loss*. Except as provided in §1.1503(d)–6, the domestic use of a dual consolidated loss is not permitted. See §1.1503(d)–2 for the definition of a domestic use. See also §1.1503(d)–7(c) *Examples 2* through *4*.

(c) *Effect of a dual consolidated loss on a consolidated group, unaffiliated dual resident corporation, or unaffiliated domestic owner*. For any taxable year in

which a dual resident corporation or separate unit has a dual consolidated loss that is subject to the domestic use limitation of paragraph (b) of this section, the following rules shall apply:

(1) *Dual resident corporation.* This paragraph (c)(1) applies to a dual consolidated loss of a dual resident corporation. The unaffiliated dual resident corporation, or consolidated group that includes the dual resident corporation, shall compute its taxable income (or loss), or consolidated taxable income (or loss), respectively, without taking into account those items of deduction and loss that compose the dual resident corporation's dual consolidated loss. For this purpose, the dual consolidated loss shall be treated as composed of a pro rata portion of each item of deduction and loss of the dual resident corporation taken into account in calculating the dual consolidated loss. The dual consolidated loss is subject to the limitations on its use contained in paragraph (c)(3) of this section and, subject to such limitations, may be carried over or back for use in other taxable years as a separate net operating loss carryover or carryback of the dual resident corporation arising in the year incurred. If the dual resident corporation owns a separate unit or an interest in a transparent entity, the limitations contained in paragraph (c)(3) of this section shall apply to the dual resident corporation as if the separate unit or interest in a transparent entity were a separate domestic corporation that filed a consolidated return with the unaffiliated dual resident corporation, or with the consolidated group of the affiliated dual resident corporation, as applicable.

(2) *Separate unit.* This paragraph (c)(2) applies to a dual consolidated loss that is attributable to a separate unit. The unaffiliated domestic owner of a separate unit, or the consolidated group of an affiliated domestic owner of a separate unit, shall compute its taxable income (or loss) or consolidated taxable income (or loss), respectively, without taking into account those items of deduction and loss that compose the separate unit's dual consolidated loss. For this purpose, the dual consolidated loss shall be treated as composed of a pro rata portion of each item of deduction and loss of the separate unit taken into account in calculating the dual consolidated loss. The dual consolidated loss is subject to the limitations contained in paragraph (c)(3) of this section as if the separate unit to which the dual consolidated loss is attributable were a separate domestic corporation that filed a consolidated return with its unaffiliated domestic owner or with the consolidated group of its affiliated domestic owner, as applicable. Subject to such limitations, the dual consolidated loss may be carried over or back for use in other taxable years as a separate net operating loss carryover or carryback of the separate unit arising in the year incurred. See § 1.1503(d)–7(c) *Examples 29* and *38*.

(3) *SRLY limitation.* The dual consolidated loss shall be treated as a loss incurred by the dual resident corporation or separate unit in a separate return limitation year and shall be subject to all of the limitations of § 1.1502–21(c) (SRLY limitation), subject to the following modifications—

(i) Notwithstanding § 1.1502–1(f)(2)(i), the SRLY limitation is applied to any dual consolidated loss of a common parent that is a dual resident corporation, or any dual consolidated loss attributable to a separate unit of a common parent;

(ii) The SRLY limitation is applied without regard to § 1.1502–21(c)(2) (SRLY subgroup limitation) and 1.1502–21(g) (overlap with section 382);

(iii) For purposes of calculating the general SRLY limitation under § 1.1502–21(c)(1)(i), the calculation of aggregate consolidated taxable income shall only include items of income, gain, deduction, and loss generated—

(A) In the case of a hybrid entity separate unit, in years in which the hybrid entity (an interest in which is a separate unit) is taxed as a corporation (or otherwise at the entity level) either on its worldwide income or as a resident in the same foreign country in which it was so taxed during the year in which the dual consolidated loss was generated; and

(B) In the case of a foreign branch separate unit, in years in which the foreign branch qualified as a separate unit in the same foreign country in which it so qualified during the year in

which the dual consolidated loss was generated.

(iv) For purposes of calculating the general SRLY limitation under § 1.1502–21(c)(1)(i), the calculation of aggregate consolidated taxable income shall not include any amount included in income pursuant to § 1.1503(d)–6(h) (relating to the recapture of a dual consolidated loss).

(4) *Items of a dual consolidated loss used in other taxable years.* A pro rata portion of each item of deduction or loss that composes the dual consolidated loss shall be considered to be used when the dual consolidated loss is used in other taxable years. See § 1.1503(d)–7(c) *Examples 29* and *38*.

(5) *Reconstituted net operating losses.* For additional rules and limitations that apply to reconstituted net operating losses, see § 1.1503(d)–6(h)(6).

(d) *Elimination of a dual consolidated loss after certain transactions*—(1) *General rule.* In general, a dual resident corporation has a net operating loss (and, therefore, a dual consolidated loss) only if it sustains such loss, or succeeds to such loss as a result of acquiring the assets of a corporation that sustained the loss in a transaction described in section 381(a). Similarly, a net loss generally is attributable to a separate unit of a domestic owner (and therefore is a dual consolidated loss) only if the domestic owner incurs the deductions or losses, or succeeds to such deductions or losses in a transaction described in section 381(a). Except as provided in § 1.1503(d)–6(h)(6)(iii), section 1503(d) and these regulations do not alter these general rules. Thus, the provisions of §§ 1.1503(d)–1 through 1.1503(d)–8 generally do not cause a corporation to have a dual consolidated loss if it did not sustain (or inherit) the loss. Instead, these regulations either eliminate a dual consolidated loss that a corporation sustained (or inherited), or prevent the carryover of a dual consolidated loss under section 381 that would ordinarily occur, as a result of certain transactions.

(i) *Transactions described in section 381(a).* This paragraph (d)(1)(i) applies to a dual consolidated loss of a dual resident corporation, or of a domestic owner attributable to a separate unit, that is subject to the domestic use limitation rule of paragraph (b) of this section. In such a case, and except as provided in paragraph (d)(2) of this section, the dual consolidated loss shall not carry over to another corporation in a transaction described in section 381(a) and, as a result, shall be eliminated. See § 1.1503(d)–7(c) *Example 20*.

(ii) *Cessation of separate unit status.* This paragraph (d)(1)(ii) applies when a separate unit of an unaffiliated domestic owner ceases to be a separate unit of its domestic owner, or when a separate unit of an affiliated domestic owner ceases to be a separate unit with respect to its domestic owner and all other members of the affiliated domestic owner's consolidated group. In such a case, and except as provided in paragraph (d)(2)(iii) of this section, a dual consolidated loss of the domestic owner attributable to such separate unit, that is subject to the domestic use limitation of paragraph (b) of this section, shall be eliminated. For purposes of this paragraph (d)(1)(ii), a separate unit may cease to be a separate unit if, for example, such separate unit is terminated, dissolved, liquidated, sold, or otherwise disposed of. See § 1.1503(d)–7(c) *Example 21*.

(2) *Exceptions*—(i) *Certain section 368(a)(1)(F) reorganizations.* Paragraph (d)(1)(i) of this section (relating to transactions described in section 381(a)) shall not apply to a dual consolidated loss of a dual resident corporation that undergoes a reorganization described in section 368(a)(1)(F) in which the resulting corporation is a domestic corporation. In such a case, the dual consolidated loss of the resulting corporation continues to be subject to the limitations of paragraphs (b) and (c) of this section, applied as if the resulting corporation incurred the dual consolidated loss.

(ii) *Acquisition of a dual resident corporation by another dual resident corporation.* If a dual resident corporation transfers its assets to another dual resident corporation in a transaction described in section 381(a), and the transferee corporation is a resident of (or is taxed on its worldwide income by) the same foreign country of which the transferor was a resident (or was taxed on its worldwide income), then

paragraph (d)(1)(i) of this section shall not apply with respect to dual consolidated losses of the dual resident corporation, and income generated by the transferee may be offset by the carryover dual consolidated losses of the transferor, subject to the limitations of paragraphs (b) and (c) of this section applied as if the transferee incurred the dual consolidated loss. Dual consolidated losses of the transferor dual resident corporation may not, however, be used to offset income attributable to separate units or interests in transparent entities owned by the transferee because they constitute domestic affiliates under § 1.1503(d)–1(b)(12)(iii) and (iv), respectively.

(iii) *Acquisition of a separate unit by a domestic corporation.* This paragraph (d)(2)(iii) provides exceptions to the general rules in paragraphs (d)(1)(i) and (ii) of this section that eliminate the dual consolidated loss of a domestic owner that is attributable to a separate unit following certain transactions or events. The exceptions set forth in this paragraph (d)(2)(iii) shall only apply where a domestic owner transfers its assets to a domestic corporation (transferee corporation) in a transaction described in section 381(a).

(A) *Acquisition by a corporation that is not a member of the same consolidated group*—(1) *General rule.* If a domestic owner transfers either an individual separate unit or a combined separate unit to a transferee corporation that is not a member of its consolidated group in a transaction described in section 381(a), and the transferee corporation, or a member of the transferee's consolidated group, is a domestic owner of the transferred separate unit immediately after the transaction, then paragraphs (d)(1)(i) and (ii) of this section shall not apply to such transfer. In addition, income of the transferee, or a member of the transferee's consolidated group, that is attributable to the transferred separate unit may be offset by the carryover dual consolidated losses of the transferor domestic owner that were attributable to the transferred separate unit, subject to the limitations of paragraphs (b) and (c) of this section applied as if the transferee incurred the dual consolidated losses and such losses were attributable to the separate unit. See § 1.1503(d)–7(c) *Example 21.*

(*2*) *Combination with separate units of the transferee.* This paragraph (d)(2)(iii)(A)(*2*) applies to a transaction described in paragraph (d)(2)(iii)(A)(*1*) of this section where the transferred separate unit is combined with another separate unit of the transferee, or another member of the transferee's consolidated group, immediately after the transfer as provided under § 1.1503(d)–1(b)(4)(ii). In such a case, income generated by the transferee, or another member of the transferee's consolidated group, that is attributable to the combined separate unit may be offset by the carryover dual consolidated losses that were attributable to the transferred separate unit, subject to the limitations of paragraphs (b) and (c) of this section, applied as if the transferee incurred the dual consolidated losses and such losses were attributable to the combined separate unit.

(B) *Acquisition by a member of the same consolidated group.* If an affiliated domestic owner transfers its assets to another member of its consolidated group in a transaction described in section 381(a), and the transferee corporation or another member of such consolidated group is a domestic owner of the separate unit to which the dual consolidated loss was attributable, then paragraphs (d)(1)(i) and (ii) of this section shall not apply. In addition, income generated by the transferee that is attributable to the transferred separate unit may be offset by the carryover dual consolidated losses that were attributable to the transferred separate unit, subject to the limitations of paragraphs (b) and (c) of this section, applied as if the transferee incurred the dual consolidated losses and such losses were attributable to the separate unit. See § 1.1503(d)–7(c) *Example 21.*

(iv) *Special rules for foreign insurance companies.* See § 1.1503(d)–6(a) for additional limitations that apply where the transferor is a foreign insurance company that is a dual resident corporation under § 1.1503(d)–1(b)(2)(ii).

(e) *Special rule denying the use of a dual consolidated loss to offset tainted income*—(1) *In general.* Dual consolidated

losses incurred by a dual resident corporation that are subject to the domestic use limitation rule under paragraph (b) of this section shall not be used to offset income it earns after it ceases to be a dual resident corporation to the extent that such income is tainted income.

(2) *Tainted income*—(i) *Definition*. For purposes of paragraph (e)(1) of this section, the term *tainted income* means—

(A) Income or gain recognized on the sale or other disposition of tainted assets; and

(B) Income derived as a result of holding tainted assets.

(ii) *Income presumed to be derived from holding tainted assets*. In the absence of evidence establishing the actual amount of income that is attributable to holding tainted assets, the portion of a corporation's income in a particular taxable year that is treated as tainted income derived as a result of holding tainted assets shall be an amount equal to the corporation's taxable income for the year (other than income described in paragraph (e)(2)(i)(A) of this section) multiplied by a fraction, the numerator of which is the fair market value of all tainted assets acquired by the corporation (determined at the time such assets were so acquired) and the denominator of which is the fair market value of the total assets owned by the corporation at the end of such taxable year. To establish the actual amount of income that is attributable to holding tainted assets, documentation must be attached to, and filed by the due date (including extensions) of, the domestic corporation's tax return or the consolidated tax return of an affiliated group of which it is a member, as the case may be, for the taxable year in which the income is generated. See § 1.1503(d)–7(c) *Example 22*.

(3) *Tainted assets defined*. For purposes of paragraph (e)(2) of this section, tainted assets are any assets acquired by a domestic corporation in a nonrecognition transaction, as defined in section 7701(a)(45), any assets otherwise transferred to the corporation as a contribution to capital, or any assets otherwise received from a separate unit or a transparent entity owned by such domestic corporation, at any time during the three taxable years immediately preceding the taxable year in which the corporation ceases to be a dual resident corporation or at any time thereafter.

(4) *Exceptions*. Income derived from assets acquired by a domestic corporation shall not be subject to the limitation described in paragraph (e)(1) of this section, and in addition shall not be treated as tainted assets as defined in paragraph (e)(3) of this section, if—

(i) For the taxable year in which the assets were acquired, the corporation did not have a dual consolidated loss (or a carryforward of a dual consolidated loss to such year); or

(ii) The assets were acquired as replacement property in the ordinary course of business.

(f) *Computation of foreign tax credit limitation*. If a dual consolidated loss is subject to the domestic use limitation rule under paragraph (b) of this section, the consolidated group, unaffiliated dual resident corporation, or unaffiliated domestic owner shall compute its foreign tax credit limitation by applying the limitations of paragraph (c) of this section. Thus, the items constituting the dual consolidated loss are not taken into account until the year in which such items are absorbed.

[T.D. 9315, 72 FR 12914, Mar. 19, 2007]

§ 1.1503(d)–5 Attribution of items and basis adjustments.

(a) *In general*. This section provides rules for determining the amount of income or dual consolidated loss of a dual resident corporation. This section also provides rules for determining the income or dual consolidated loss attributable to a separate unit, as well as the income or loss attributable to an interest in a transparent entity. Paragraph (b) of this section provides rules with respect to dual resident corporations. Paragraph (c) of this section provides rules with respect to separate units and interests in transparent entities. These determinations are required for various purposes under section 1503(d). For example, it is necessary for purposes of applying the domestic use limitation rule under § 1.1503(d)–4(b) to a dual consolidated loss, and for determining the extent to which a dual consolidated loss is available to offset income as provided under § 1.1503(d)–4(c).

These determinations are also necessary for purposes of determining whether the amount subject to recapture may be reduced pursuant to §1.1503(d)–6(h)(2). Paragraph (d) of this section provides rules with respect to the foreign tax treatment of items. Paragraph (e) of this section provides rules regarding the treatment of items where a dual resident corporation, separate unit, or transparent entity only qualified as such during a portion of a taxable year. Paragraph (f) of this section provides rules for determining the assets and liabilities of a separate unit. Finally, paragraph (g) of this section provides rules for making basis adjustments to stock of certain members of a consolidated group and to certain interests in partnerships. The rules in this section apply for purposes of §§1.1503(d)–1 through 1.1503(d)–7.

(b) *Determination of amount of income or dual consolidated loss of a dual resident corporation*—(1) *In general*. For purposes of determining whether a dual resident corporation has income or a dual consolidated loss for the taxable year, and except as provided in paragraph (b)(2) of this section, the dual resident corporation shall compute its income or dual consolidated loss taking into account only those items of income, gain, deduction, and loss from such year (including any items recognized by such corporation as a result of an election under section 338). In the case of an affiliated dual resident corporation, such calculation shall be made in accordance with the rules set forth in the regulations under section 1502 governing the computation of consolidated taxable income. See also paragraphs (d) and (e) of this section.

(2) *Exceptions*. For purposes of determining the income or dual consolidated loss of a dual resident corporation, the following shall not be taken into account—

(i) Any net capital loss of the dual resident corporation;

(ii) Any carryover or carryback losses; or

(iii) Any items of income, gain, deduction, and loss that are attributable to a separate unit or an interest in a transparent entity of the dual resident corporation.

(c) *Determination of amount of income or dual consolidated loss attributable to a separate unit, and income or loss attributable to an interest in a transparent entity*—(1) *In general*—(i) *Scope and purpose*. Paragraphs (c) through (e) of this section apply for purposes of determining the income or dual consolidated loss attributable to a separate unit, and the income or loss attributable to an interest in a transparent entity, for the taxable year. In the case of an affiliated domestic owner, this determination shall be made in accordance with the rules set forth in the regulations under section 1502 governing the computation of consolidated taxable income. These rules apply solely for purposes of section 1503(d).

(ii) *Only items of domestic owner taken into account*. The computation made under paragraphs (c) through (e) of this section shall be made using only those existing items of income, gain, deduction, and loss of the separate unit's or transparent entity's domestic owner (or owners, in the case of certain combined separate units), as determined for U.S. tax purposes. These items must be translated into U.S. dollars (if necessary) at the appropriate exchange rate provided under section 989(b), as modified by regulations. The computation shall be made as if the separate unit or interest in a transparent entity were a domestic corporation, using items that are attributable to the separate unit or interest in a transparent entity. However, for purposes of making this computation, net capital losses, and carryover or carryback losses, of the domestic owner shall not be taken into account. Items of income, gain, deduction, and loss that are otherwise disregarded for U.S. tax purposes shall not be regarded or taken into account for purposes of this section. See §1.1503(d)–7(c) *Examples 6* and *23* through *25*.

(iii) *Separate application*. The attribution rules of this section shall apply separately to each separate unit or interest in a transparent entity. Thus, an item of income, gain, deduction, or loss shall not be considered attributable to more than one separate unit or interest in a transparent entity. In addition, for

purposes of this section items of income, gain, deduction, and loss attributable to a separate unit or an interest in a transparent entity shall not offset items of income, gain, deduction, and loss of another separate unit or interest in a transparent entity. See §1.1503(d)–7(c) *Example 24*. See also the separate unit combination rule in §1.1503(d)–1(b)(4)(ii).

(2) *Foreign branch separate unit*—(i) *In general*. Except to the extent provided in paragraph (c)(4) of this section, for purposes of determining the items of income, gain, deduction (other than interest), and loss of a domestic owner that are attributable to the domestic owner's foreign branch separate unit, the principles of section 864(c)(2), (c)(4), and (c)(5), as set forth in §1.864–4(c), and §§1.864–5 through 1.864–7, shall apply. The principles apply without regard to limitations imposed on the effectively connected treatment of income, gain, or loss under the trade or business safe harbors in section 864(b) and the limitations for treating foreign source income as effectively connected under section 864(c)(4)(D). Except as provided in paragraph (c)(2)(iii) of this section, for purposes of determining the domestic owner's interest expense that is attributable to a foreign branch separate unit, the principles of §1.882–5, as modified in paragraph (c)(2)(ii) of this section, shall apply. When applying the principles of section 864(c) (as modified by this paragraph) and §1.882–5 (as modified in paragraph (c)(2)(ii) of this section), the foreign branch separate unit's domestic owner shall be treated as a foreign corporation, the foreign branch separate unit shall be treated as a trade or business within the United States, and the other assets of the domestic owner shall be treated as assets that are not U.S. assets.

(ii) *Principles of §1.882–5*. For purposes of paragraph (c)(2)(i) of this section, the principles of §1.882–5 shall be applied, subject to the following modifications—

(A) Except as otherwise provided in this section, only the assets, liabilities, and interest expense of the domestic owner shall be taken into account in the §1.882–5 formula;

(B) Except as provided under paragraph (c)(2)(ii)(C) of this section, a taxpayer may use the alternative tax book value method under §1.861–9(i) for purposes of determining the value of its U.S. assets pursuant to §1.882–5(b)(2) and its worldwide assets pursuant to §1.882–5(c)(2);

(C) For purposes of determining the value of a U.S. asset pursuant to §1.882–5(b)(2), and worldwide assets pursuant to §1.882–5(c)(2), the taxpayer must use the same methodology under §1.861–9T(g) (that is, tax book value, alternative tax book value, or fair market value) that the taxpayer uses for purposes of allocating and apportioning interest expense for the taxable year under section 864(e);

(D) Asset values shall be determined pursuant to §1.861–9T(g)(2); and

(E) For purposes of determining the step-two U.S. connected liabilities, the amounts of worldwide assets and liabilities under §1.882–5(c)(2)(iii) and (iv) must be determined in accordance with U.S. tax principles, rather than substantially in accordance with U.S. tax principles.

(iii) *Exception where foreign country attributes interest expense solely by reference to books and records*. The principles of §1.882–5 shall not apply if the foreign country in which the foreign branch separate unit is located determines, for purposes of computing taxable income (or loss) of a permanent establishment or branch of a nonresident corporation under the laws of the foreign country, the interest expense of the foreign branch separate unit by taking into account only the items of interest expense reflected on the foreign branch separate unit's books and records. In such a case, only those items of the domestic owner's interest expense reflected on the foreign branch separate unit's books and records (as provided in paragraph (c)(3)(i) of this section), adjusted to conform to U.S. tax principles, shall be attributable to the foreign branch separate unit. This paragraph shall not apply where the foreign country does not use a method of attributing interest based solely on the interest that is reflected on the books and records. For example, this paragraph does not apply if the foreign country uses a method for attributing interest expense similar

to § 1.882–5 or that set forth in the Organization for Economic Co-operation and Development Report on the Attribution of Profits to Permanent Establishments, Part II (Banks), December 2006. See *http://www.oecd.org*.

(3) *Hybrid entity separate unit and an interest in a transparent entity*—(i) *General rule*. This paragraph (c)(3) applies to determine the items of income, gain, deduction, and loss of a domestic owner that are attributable to a hybrid entity separate unit, or an interest in a transparent entity, of such domestic owner. Except to the extent provided in paragraph (c)(4) of this section, the domestic owner's items of income, gain, deduction, and loss are attributable to the extent they are reflected on the books and records of the hybrid entity or transparent entity, as applicable, as adjusted to conform to U.S. tax principles. See § 1.1503(d)–7(c) *Examples 23* through *26*. For purposes of this paragraph (c)(3), the term ''books and records'' has the meaning provided under § 1.989(a)–1(d). The treatment of items for foreign tax purposes, including under any type of foreign anti-deferral regime, is not relevant for purposes of determining whether items are reflected on the books and records of the entity, or for purposes of making adjustments to such items to conform to U.S. tax principles. The method described in the second sentence of this paragraph shall not apply to the extent that the Commissioner determines that booking practices are employed with a principal purpose of avoiding the principles of section 1503(d), including inconsistently treating the same or similar items of income, gain, deduction, and loss. In such a case, the Commissioner may reallocate the items of income, gain, deduction, and loss between or among a domestic owner, its hybrid entities, its transparent entities (and interests therein), its separate units, or any other entity, as applicable, in a manner consistent with the principles of section 1503(d) and which properly reflects income (or loss).

(ii) *Interests in certain disregarded entities, partnerships, and grantor trusts owned by a hybrid entity or transparent entity*. This paragraph (c)(3)(ii) applies if a hybrid entity or transparent entity to which paragraph (c)(3)(i) of this section applies owns, directly or indirectly (other than through a hybrid entity or transparent entity), an interest in an entity that is treated as a disregarded entity, partnership, or grantor trust for U.S. tax purposes, but is not a hybrid entity or a transparent entity. For example, the rules of this paragraph would apply when a hybrid entity holds an interest in a limited partnership created in the United States and, for both U.S. and foreign tax purposes the entity is considered a partnership. In such a case, and except to the extent provided in paragraph (c)(4) of this section, items of income, gain, deduction, and loss that are reflected on the books and records of such disregarded entity, partnership or grantor trust, as determined under paragraph (c)(3)(i) of this section, shall be treated as being reflected on the books and records of the hybrid entity or transparent entity for purposes of applying paragraph (c)(3)(i) of this section. See § 1.1503(d)–7(c) *Example 26*.

(4) *Special rules*. The following special rules shall apply for purposes of attributing items to separate units or interests in transparent entities under this section:

(i) *Allocation of items between certain tiered separate units and interests in transparent entities*—(A) *Foreign branch separate unit*. This paragraph (c)(4)(i) applies where a hybrid entity or transparent entity owns directly or indirectly (other than through a hybrid entity or a transparent entity), a foreign branch separate unit. For purposes of determining items of income, gain, deduction, and loss of the domestic owner that are attributable to the domestic owner's foreign branch separate unit described in the preceding sentence, only items of income, gain, deduction, and loss that are attributable to the domestic owner's interest in the hybrid entity, or transparent entity, as provided in paragraph (c)(3) of this section, shall be taken into account. Further, only assets, liabilities, and activities of the domestic owner's interest in the hybrid entity or the transparent entity shall be taken into account under paragraph (c)(2) of this section when applying the principles of 864(c)(2), (c)(4), (c)(5) (as set forth in § 1.864–4(c), and §§ 1.864–5 through 1.864–

7), and §1.882–5 (as modified in paragraph (c)(2)(ii) of this section). See §1.1503(d)–7(c) *Examples 25* and *26*.

(B) *Hybrid entity separate unit or interest in a transparent entity*. For purposes of determining items of income, gain, deduction, and loss that are attributable to a hybrid entity separate unit or an interest in a transparent entity described in paragraph (c)(3) of this section, such items shall not be taken into account to the extent they are attributable to a foreign branch separate unit pursuant to paragraph (c)(4)(i)(A) of this section. See §1.1503(d)–7(c) *Examples 25* and *26*.

(ii) *Combined separate unit*. If two or more individual separate units defined in §1.1503(d)–1(b)(4)(i) are treated as one combined separate unit pursuant to §1.1503(d)–1(b)(4)(ii), the items of income, gain, deduction, and loss that are attributable to the combined separate unit shall be determined as follows:

(A) Items of income, gain, deduction, and loss are first attributed to each individual separate unit without regard to §1.1503(d)–1(b)(4)(ii), pursuant to the rules of paragraphs (c) through (e) of this section.

(B) The combined separate unit then takes into account all of the items of income, gain, deduction, and loss attributable to its individual separate units pursuant to paragraph (c)(4)(ii)(A) of this section. See §1.1503(d)–7(c) *Examples 25* and *26*.

(iii) *Gain or loss on the direct or indirect disposition of a separate unit or an interest in a transparent entity*—(A) *In general*. This paragraph (c)(4)(iii) applies for purposes of attributing items of income, gain, deduction, and loss that are recognized on the sale, exchange, or other disposition of a separate unit or an interest in a transparent entity (or an interest in a disregarded entity, partnership, or grantor trust that owns, directly or indirectly, a separate unit or an interest in a transparent entity). For purposes of this paragraph (c)(4)(iii), items taken into account on the sale, exchange, or other disposition include loss recapture income or gain under section 367(a)(3)(C) or 904(f)(3), and gain or loss recognized by the domestic owner as the result of an election under section 338. In cases where this paragraph (c)(4)(iii)(A) applies, items taken into account on the sale, exchange, or other disposition shall be attributable to the separate unit or the interest in the transparent entity to the extent of gain or loss that would have been recognized had the separate unit or transparent entity sold all its assets (as determined in paragraph (f) of this section) in a taxable exchange, immediately before the sale, exchange, or other disposition (deemed sale). For purposes of a deemed sale described in this paragraph (c)(4)(iii), the assets are treated as being sold for an amount equal to their fair market value, plus the assumption of the liabilities of the separate unit or interest in a transparent entity (as determined in paragraph (f) of this section). See §1.1503(d)–7(c) *Example 27*.

(B) *Multiple separate units or interests in transparent entities*. This paragraph (c)(4)(iii)(B) applies to a sale, exchange, or other disposition described in paragraph (c)(4)(iii)(A) of this section that results in more than one separate unit or interest in a transparent entity being, directly or indirectly, disposed of. In such a case, items of income, gain, deduction, and loss recognized on such sale, exchange, or other disposition are allocated and attributed to each separate unit or interest in a transparent entity, based on the relative gain or loss that would have been recognized by each separate unit or interest in a transparent entity pursuant to a deemed sale of their assets. See §1.1503(d)–7(c) *Example 28*.

(iv) *Inclusions on stock*. Any amount included in income of a domestic owner arising from ownership of stock in a foreign corporation (for example, under sections 78, 951, or 986(c)) through a separate unit, or interest in a transparent entity, shall be attributable to the separate unit or interest in a transparent entity, if an actual dividend from such foreign corporation would have been so attributed. See §1.1503(d)–7(c) *Example 24*.

(v) *Foreign currency gain or loss recognized under section 987*. Foreign currency gain or loss of a domestic owner recognized under section 987 as a result of a transfer or remittance shall not be

attributable to a separate unit or an interest in a transparent entity.

(vi) *Recapture of dual consolidated loss.* If all or a portion of a dual consolidated loss that was attributable to a separate unit is included in the gross income of a domestic owner under the recapture provisions of §1.1503(d)–6(h), such amount shall be attributable to the separate unit that incurred the dual consolidated loss being recaptured. See §1.1503(d)–7(c) *Examples 38* and *40*.

(d) *Foreign tax treatment disregarded.* The fact that a particular item taken into account in computing the income or dual consolidated loss of a dual resident corporation or a separate unit, or the income or loss of an interest in a transparent entity, is not taken into account in computing income (or loss) subject to a foreign country's income tax shall not cause such item to be excluded from being taken into account under paragraph (b), (c), or (e) of this section.

(e) *Items generated or incurred while a dual resident corporation, a separate unit, or a transparent entity.* For purposes of determining the amount of the dual consolidated loss of a dual resident corporation for the taxable year, only the items of income, gain, deduction, and loss generated or incurred during the period the dual resident corporation qualified as such shall be taken into account. For purposes of determining the amount of income of a dual resident corporation for the taxable year, all the items of income, gain, deduction, and loss generated or incurred during the year shall be taken into account. For purposes of determining the amount of the income or dual consolidated loss attributable to a separate unit, or the income or loss attributable to an interest in a transparent entity, for the taxable year, only the items of income, gain, deduction, and loss generated or incurred during the period the separate unit or the interest in the transparent entity qualified as such shall be taken into account. For purposes of this paragraph (e), the allocation of items to periods shall be made under the principles of §1.1502–76(b).

(f) *Assets and liabilities of a separate unit or an interest in a transparent entity.* A separate unit or an interest in a transparent entity shall be treated as owning assets to the extent items of income, gain, deduction, and loss from such assets would be attributable to the separate unit or interest in the transparent entity under paragraphs (c) through (e) of this section. Similarly, liabilities shall be treated as liabilities of a separate unit, or an interest in a transparent entity, to the extent interest expense incurred on such liabilities would be attributable to the separate unit, or the interest in a transparent entity, under paragraphs (c) through (e) of this section.

(g) *Basis adjustments*—(1) *Affiliated dual resident corporation or affiliated domestic owner.* If a member of a consolidated group owns stock in an affiliated dual resident corporation or an affiliated domestic owner that is a member of the same consolidated group, the member shall adjust the basis of the stock in accordance with the provisions of §1.1502–32. Corresponding adjustments shall be made to the stock of other members in accordance with the provisions of §1.1502–32. In the case where two or more individual separate units are treated as a combined separate unit pursuant to §1.1503(d)–1(b)(4)(ii), see paragraph (g)(3) of this section.

(2) *Interests in hybrid entities that are partnerships or interests in partnerships through which a separate unit is owned indirectly*—(i) *Scope.* This paragraph (g)(2) applies for purposes of determining the adjusted basis of an interest in—

(A) A hybrid entity that is a partnership; and

(B) A partnership through which a domestic owner indirectly owns a separate unit.

(ii) *Determination of basis of partner's interest.* The adjusted basis of an interest described in paragraph (g)(2)(i) of this section shall be adjusted in accordance with section 705 and this paragraph (g)(2). The adjusted basis shall not be decreased for any amount of a dual consolidated loss that is attributable to the partnership interest, or separate unit owned indirectly through the partnership interest, as applicable, that is not absorbed as a result of the application of §1.1503(d)–4(b) and (c). The adjusted basis shall, however, be

decreased for the amount of such dual consolidated loss that is absorbed in a carryover or carryback taxable year. The adjusted basis shall be increased for any amount included in income pursuant to § 1.1503(d)–6(h) as a result of the recapture of a dual consolidated loss that was attributable to the interest in the hybrid partnership, or separate unit owned indirectly through the partnership interest, as applicable.

(3) *Combined separate units.* This paragraph (g)(3) applies where two or more individual separate units of one or more affiliated domestic owners are treated as one combined separate unit pursuant to § 1.1503(d)–1(b)(4)(ii). In such a case, a member owning stock in an affiliated domestic owner of the combined separate unit shall adjust the basis in the stock of such domestic owner as provided in paragraph (g)(1) of this section, and an affiliated domestic owner shall adjust its basis in a partnership, as provided in paragraph (g)(2) of this section, taking into account only those items of income, gain, deduction, or loss attributable to each individual separate unit, prior to combination. For purposes of this rule, if the dual consolidated loss attributable to a combined separate unit is subject to the domestic use limitation of § 1.1503(d)–4(b), then for purposes of this paragraph (g) and § 1.1502–32, the dual consolidated loss shall be allocated to an individual separate unit to the extent such individual separate unit contributed items of deduction or loss giving rise to the dual consolidated loss. In addition, if one or more affiliated domestic owners are required to recapture all or a portion of a dual consolidated loss pursuant to paragraph (h) of this section, such recapture amount shall be allocated to the affiliated domestic owner of the individual separate units composing the combined separate unit, to the extent such individual separate units contributed items of deduction or loss giving rise to the recaptured dual consolidated loss.

[T.D. 9315, 72 FR 12914, Mar. 19, 2007; 72 FR 20424, Apr. 25, 2007]

§ 1.1503(d)–6 Exceptions to the domestic use limitation rule.

(a) *In general*—(1) *Scope and purpose.* This section provides certain exceptions to the domestic use limitation rule of § 1.1503(d)–4(b). Paragraph (b) of this section provides an exception for bilateral elective agreements. Paragraph (c) of this section provides rules regarding an exception that applies when there is no possibility of a foreign use. Paragraphs (d) through (h) of this section provide rules for an exception where a domestic use election is made. Paragraph (e) of this section provides rules with respect to triggering events, and paragraph (f) of this section provides rules regarding exceptions to triggering events. Paragraph (g) of this section provides rules with respect to the annual certification reporting requirement. Paragraph (h) of this section provides rules regarding the recapture of dual consolidated losses. Finally, paragraph (j) of this section provides rules regarding the termination of domestic use agreements and the annual certification requirement.

(2) *Absence of foreign affiliate or foreign consolidation regime.* The absence of a foreign affiliate or a foreign consolidation regime alone does not constitute an exception to the domestic use limitation rule. This is the case because it is still possible that all or a portion of the dual consolidated loss may be put to a foreign use. For example, there may be a foreign use with respect to an affiliate acquired in a year subsequent to the year in which the dual consolidated loss was incurred. In addition, a foreign use may occur in the absence of a foreign consolidation regime through a sale, merger, or similar transaction. See § 1.1503(d)–7(c) *Example 2.*

(3) *Foreign insurance companies treated as domestic corporations.* The exceptions contained in this section shall not apply to losses of a foreign insurance company that is a dual resident corporation under § 1.1503(d)–1(b)(2)(ii), or to losses attributable to any separate unit of such foreign insurance company. In addition, these exceptions shall not apply to losses described in the preceding sentence that, subject to the rules of § 1.1503(d)–4(d), carry over to a domestic corporation pursuant to a transaction described in section 381(a).

(b) *Elective agreement in place between the United States and a foreign country*—

(1) *In general*. The domestic use limitation rule of §1.1503(d)–4(b) shall not apply to a dual consolidated loss to the extent the consolidated group, unaffiliated dual resident corporation, or unaffiliated domestic owner, as the case may be, elects to deduct the loss in the United States pursuant to an agreement entered into between the United States and a foreign country that puts into place an elective procedure through which losses in a particular year may be used to offset income in only one country. This exception shall apply only if all the terms and conditions required under such agreement are satisfied, including any reporting or filing requirements. See §1.1503(d)–3(e)(2)(iii) for the effect of an agreement described in this paragraph on a stand-alone domestic use agreement.

(2) *Application to combined separate units*. This paragraph (b)(2) applies where two or more individual separate units are treated as one combined separate unit pursuant to §1.1503(d)–1(b)(4)(ii), and an agreement described in paragraph (b)(1) of this section would apply to at least one of the individual separate units. In such a case, and except to the extent provided in the agreement, the consolidated group, unaffiliated dual resident corporation, or unaffiliated domestic owner, as the case may be, may apply the agreement to the individual separate units, as applicable, provided the terms and conditions of the agreement are otherwise satisfied. See §1.1503(d)–7(c) *Example 19*.

(c) *No possibility of foreign use*—(1) *In general*. The domestic use limitation rule of §1.1503(d)–4(b) shall not apply to a dual consolidated loss if the consolidated group, unaffiliated dual resident corporation, or unaffiliated domestic owner, as the case may be—

(i) Demonstrates, to the satisfaction of the Commissioner, that no foreign use (as defined in §1.1503(d)–3) of the dual consolidated loss occurred in the year in which it was incurred, and that no foreign use can occur in any other year by any means; and

(ii) Prepares a statement described in paragraph (c)(2) of this section that is attached to, and filed by the due date (including extensions) of, its U.S. income tax return for the taxable year in which the dual consolidated loss is incurred. See §1.1503(d)–7(c) *Examples 2*, *30*, and *31*.

(2) *Statement*. The statement described in this paragraph (c)(2) must be signed under penalties of perjury by the person who signs the tax return. The statement must be labeled ''No Possibility of Foreign Use of Dual Consolidated Loss Statement'' at the top of the page and must include the following items, in paragraphs labeled to correspond with the items set forth in paragraphs (c)(2)(i) through (iv) of this section:

(i) A statement that the document is submitted under the provisions of paragraph (c) of this section.

(ii) The name, address, taxpayer identification number, and place and date of incorporation of the dual resident corporation, and the country or countries that tax the dual resident corporation on its worldwide income or on a residence basis, or, in the case of a separate unit, identification of the separate unit, including the name under which it conducts business, its principal activity, and the country in which its principal place of business is located. In the case of a combined separate unit, such information must be provided for each individual separate unit that is treated as part of the combined separate unit under §1.1503(d)–1(b)(4)(ii).

(iii) A statement of the amount of the dual consolidated loss at issue.

(iv) An analysis, in reasonable detail and specificity, of the treatment of the losses and deductions composing the dual consolidated loss under the relevant facts. The analysis must include the reasons supporting the conclusion that no foreign use of the dual consolidated loss can occur as described in paragraph (c)(1)(i) of this section. The analysis must be supported with official or certified English translations of the relevant provisions of foreign law. The analysis may, for example, be based on the taxpayer's interpretation of foreign law, on advice received from local tax advisers in an opinion, or on a ruling from local country tax authorities. In all cases, however, the determination must be made to the satisfaction of the Commissioner.

(d) *Domestic use election*—(1) *In general*. The domestic use limitation rule

of §1.1503(d)–4(b) shall not apply to a dual consolidated loss if an election to be bound by the provisions of paragraphs (d) through (j) of this section is made by the consolidated group, unaffiliated dual resident corporation, or unaffiliated domestic owner, as the case may be (elector). In order to elect such relief, an agreement described in this paragraph (d)(1) (domestic use agreement) must be attached to, and filed by the due date (including extensions) of, the U.S. income tax return of the elector for the taxable year in which the dual consolidated loss is incurred. The domestic use agreement must be signed under penalties of perjury by the person who signs the return. If dual consolidated losses of more than one dual resident corporation or separate unit requires the filing of domestic use agreements by the same elector, the agreements may be combined in a single document, but the information required by paragraphs (d)(1)(ii) and (iv) of this section must be provided separately with respect to each dual consolidated loss. The domestic use agreement must be labeled ''Domestic Use Election and Agreement'' at the top of the page and must include the following items, in paragraphs labeled to correspond with the following:

(i) A statement that the document submitted is an election and an agreement under the provisions of paragraph (d) of this section.

(ii) The information required by paragraph (c)(2)(ii) of this section.

(iii) An agreement by the elector to comply with all of the provisions of paragraphs (d) through (j) of this section, as applicable.

(iv) A statement of the amount of the dual consolidated loss at issue.

(v) A certification that there has not been, and will not be, a foreign use (as defined in §1.1503(d)–3) during the certification period (as defined in §1.1503(d)–1(b)(20)).

(vi) A certification that arrangements have been made to ensure that there will be no foreign use of the dual consolidated loss during the certification period, and that the elector will be informed of any such foreign use of the dual consolidated loss during such period.

(vii) If applicable, a notification that an excepted triggering event under paragraph (f)(2) of this section has occurred with respect to the dual consolidated loss within the taxable year in which the loss is incurred. See paragraph (g) of this section for notification of excepted triggering events occurring during the certification period.

(2) *No domestic use election available if there is a triggering event in the year the dual consolidated loss is incurred.* Except as otherwise provided in this section, if a dual resident corporation or separate unit incurs a dual consolidated loss in a taxable year and a triggering event, as described in paragraph (e)(1) of this section, occurs (and no exception applies) with respect to the dual consolidated loss in such taxable year, then the consolidated group, unaffiliated dual resident corporation, or unaffiliated domestic owner, as the case may be, may not make a domestic use election with respect to such dual consolidated loss and the loss will be subject to the domestic use limitation rule of §1.1503(d)–4(b). See §1.1503(d)–7(c) *Examples 5* through *7*. See also §1.1503(d)–4(d) for rules that eliminate a dual consolidated loss after certain transactions.

(e) *Triggering events requiring the recapture of a dual consolidated loss*—(1) *Events.* Except as provided under paragraphs (e)(2) (rebuttal of triggering events) and (f) (exceptions to triggering events) of this section, if there is a triggering event described in this paragraph (e)(1) with respect to a dual consolidated loss of a dual resident corporation or a separate unit during the certification period (as defined in §1.1503(d)–1(b)(20)), the elector will recapture and report as ordinary income the amount of such dual consolidated loss as provided in paragraph (h) of this section on its tax return for the taxable year in which the triggering event occurs (or, when the triggering event is a foreign use of the dual consolidated loss, the taxable year that includes the last day of the foreign taxable year during which such use occurs). In addition, the elector must pay any applicable interest charge required by paragraph (h) of this section. For purposes of this section, any of the following events shall constitute a triggering event:

(i) *Foreign use.* A foreign use (as defined in § 1.1503(d)–3) of the dual consolidated loss. See § 1.1503(d)–3(c) for exceptions to foreign use.

(ii) *Disaffiliation.* An affiliated dual resident corporation or affiliated domestic owner that incurred directly or through a separate unit, respectively, a dual consolidated loss that is subject to a domestic use election, ceases to be a member of the consolidated group that made the domestic use election. For purposes of this paragraph (e)(1)(ii), an affiliated dual resident corporation or affiliated domestic owner shall be considered to cease to be a member of the consolidated group if it is no longer a member of the group within the meaning of § 1.1502–1(b), or if the group ceases to exist (for example, when the group no longer files a consolidated return). See § 1.1503(d)–7(c) *Example 34.* Any consequences resulting from this triggering event (for example, recapture of a dual consolidated loss) shall be taken into account on the tax return of the consolidated group for the taxable year that includes the date on which the affiliated dual resident corporation or affiliated domestic owner ceases to be a member of the consolidated group. This paragraph (e)(1)(ii) shall not apply to an acquisition described in § 1.1502–75(d)(3) where the consolidated group that includes the affiliated dual resident corporation or affiliated domestic owner, as applicable, is treated as remaining in existence.

(iii) *Affiliation.* An unaffiliated dual resident corporation or unaffiliated domestic owner becomes a member of a consolidated group. Any consequences resulting from this triggering event (for example, recapture of a dual consolidated loss) shall be taken into account on the tax return of the unaffiliated dual resident corporation or unaffiliated domestic owner for the taxable year that ends at the end of the day on which such corporation becomes a member of the consolidated group.

(iv) *Transfer of assets.* Fifty percent or more of the dual resident corporation's or separate unit's gross assets (measured by the fair market value of the assets at the time of such transaction or, for multiple transactions, at the time of the first transaction) is sold or otherwise disposed of in either a single transaction or a series of transactions within a twelve-month period. See § 1.1503(d)–7(c) *Examples 5* and *35* through *37.* In determining whether fifty percent or more of such assets is sold or otherwise disposed of, any dispositions occurring in the ordinary course of the dual resident corporation's or separate unit's trade or business shall be disregarded. In addition, for purposes of this paragraph (e)(1)(iv), an interest in another separate unit and the shares of a dual resident corporation shall not be treated as assets of a separate unit or a dual resident corporation.

(v) *Transfer of an interest in a separate unit.* Fifty percent or more of the interest in a separate unit (measured by voting power or value at the time of such transaction, or for multiple transactions, at the time of the first transaction) of the domestic owner, as determined by reference to such domestic owner's percentage interest on the last day of the taxable year in which the dual consolidated loss was incurred, is sold or otherwise disposed of either in a single transaction or a series of transactions within a twelve-month period. See § 1.1503(d)–7(c) *Examples 5* and *35* through *37.*

(vi) *Conversion to a foreign corporation.* An unaffiliated dual resident corporation, unaffiliated domestic owner, or hybrid entity an interest in which is a separate unit, that incurred the dual consolidated loss, becomes a foreign corporation (for example, as a result of a reorganization or an election to be classified as a corporation under § 301.7701–3(c) of this chapter).

(vii) *Conversion to a regulated investment company, a real estate investment trust, or an S corporation.* An unaffiliated dual resident corporation or unaffiliated domestic owner elects to be a regulated investment company pursuant to section 851(b)(1), a real estate investment trust pursuant to section 856(c)(1), or an S corporation pursuant to section 1362(a).

(viii) *Failure to certify.* The elector fails to file a certification with respect to a dual consolidated loss as required under paragraph (g) of this section.

(ix) *Cessation of stand-alone status.* In the case of a dual consolidated loss

that is subject to the stand-alone exception described in §1.1503(d)–3(e)(2), the conditions described in §1.1503(d)–3(e)(2)(i) are no longer satisfied. See §1.1503(d)–7(c) *Example 18*.

(2) *Rebuttal*—(i) *General rule*. An event described in paragraph (e)(1) of this section shall not constitute a triggering event if the elector demonstrates, to the satisfaction of the Commissioner, that there can be no foreign use (as defined in §1.1503(d)–3) of the dual consolidated loss during the remaining certification period by any means. See paragraph (j)(1) of this section for rules regarding the termination of domestic use agreements and annual certifications following rebuttals under this general rule.

(ii) *Certain asset transfers*. An event described in paragraph (e)(1)(iv) of this section shall not constitute a triggering event if the elector demonstrates, to the satisfaction of the Commissioner, that the transfer of assets did not result in a carryover under foreign law of the dual resident corporation's, or separate unit's, losses, expenses, or deductions to the transferee of the assets. For purposes of this determination, the exception to foreign use in §1.1503(d)–3(c)(7) shall be taken into account. Following rebuttal under this paragraph (e)(2)(ii), the domestic use agreement continues in effect.

(iii) *Reporting*. In order to satisfy the requirements of paragraph (e)(2)(i) or (ii) of this section, the elector must prepare a statement, labeled ''Rebuttal of Triggering Event'' at the top of the page, that indicates that it is submitted under the provisions of this paragraph (e)(2). The statement must include the information described in paragraphs (c)(2)(ii) and (iii) of this section. The statement must also include the information described in paragraph (c)(2)(iv) of this section that supports the conclusions under paragraph (e)(2)(i) or (ii) of this section, as applicable. The statement must be attached to, and filed by the due date (including extensions) of, the elector's income tax return for the taxable year in which the presumed triggering event occurs.

(iv) *Examples*. See §1.1503(d)–7(c) *Examples 32* and *33*.

(f) *Triggering event exceptions*—(1) *Continuing ownership of assets or interests*. The following events shall not constitute triggering events, requiring the recapture of the dual consolidated loss under paragraph (h) of this section:

(i) *Disaffiliation as a result of a transaction described in section 381*. An affiliated dual resident corporation or affiliated domestic owner ceases to be a member of a consolidated group solely by reason of a transaction in which a member of the same consolidated group succeeds to the tax attributes of the dual resident corporation or domestic owner under the provisions of section 381.

(ii) *Continuing ownership by consolidated group*. This paragraph (f)(1)(ii) applies when assets of an affiliated dual resident corporation, or assets of, or interests in, a separate unit of an affiliated domestic owner are sold or otherwise disposed of. In such a case, the sale or disposition shall not be treated as a triggering event to the extent the assets or interests are acquired by one or more members of the consolidated group that includes the affiliated dual resident corporation or affiliated domestic owner, or by a partnership or a grantor trust, but only if immediately after the acquisition more than 90 percent of the partnership's or grantor trust's interests is owned, directly or indirectly, by members of such consolidated group.

(iii) *Continuing ownership by unaffiliated dual resident corporation or unaffiliated domestic owner*. This paragraph (f)(1)(iii) applies when assets of an unaffiliated dual resident corporation, or assets of, or interests in, a separate unit of an unaffiliated domestic owner, are sold or otherwise disposed of. In such a case, the sale or disposition shall not be a triggering event to the extent such assets or interests are acquired by the unaffiliated dual resident corporation, or unaffiliated domestic owner, as applicable, or by a partnership or grantor trust, but only if immediately after the acquisition more than 90 percent of the partnership's or grantor trust's interests is owned, directly or indirectly, by the unaffiliated dual resident corporation or unaffiliated domestic owner. For example, this

paragraph (f)(1)(iii) applies when an unaffiliated domestic owner acquires direct ownership of the assets of a separate unit that it had immediately before owned indirectly through a partnership.

(2) *Transactions requiring a new domestic use agreement*—(i) *Multiple-party events.* If all the requirements of paragraph (f)(2)(iii) of this section are satisfied, the following events shall not constitute triggering events requiring the recapture of the dual consolidated loss under paragraph (h) of this section:

(A) An affiliated dual resident corporation or affiliated domestic owner becomes an unaffiliated domestic corporation or a member of a new consolidated group (other than in a transaction described in paragraph (f)(2)(ii)(B) of this section).

(B) Assets of a dual resident corporation or assets of, or interests in, a separate unit, are sold or otherwise disposed of in a transaction in which such assets or interests are acquired by an unaffiliated domestic corporation, one or more members of a new consolidated group, or by a partnership or grantor trust, but only if immediately after the sale or disposition more than 90 percent of the partnership's or grantor trust's interests is owned, directly or indirectly, by the unaffiliated domestic owner or by members of a new consolidated group, as applicable. See the related exception to foreign use provided under §1.1503(d)–3(c)(8). See also §1.1503(d)–7(c) *Examples 36* and *37*.

(ii) *Events resulting in a single consolidated group.* If the requirements of paragraph (f)(2)(iii)(A) of this section are satisfied, the following events shall not constitute triggering events requiring the recapture of the dual consolidated loss under paragraph (h) of this section:

(A) An unaffiliated dual resident corporation or unaffiliated domestic owner becomes a member of a consolidated group.

(B) A consolidated group ceases to exist as a result of a transaction described in §1.1502–13(j)(5)(i) (relating to acquisitions of the common parent of the consolidated group), other than a transaction in which any member of the terminating group, or the successor-in-interest of such member, is not a member of the surviving group immediately after the terminating group ceases to exist. See §1.1503(d)–7(c) *Example 34*.

(iii) *Requirements*—(A) *New domestic use agreement.* The unaffiliated domestic corporation or new consolidated group (subsequent elector) must file an agreement described in paragraph (d)(1) of this section (new domestic use agreement). The new domestic use agreement must be labeled ''New Domestic Use Agreement'' at the top of the page, and must be attached to and filed by the due date (including extensions) of, the subsequent elector's income tax return for the taxable year in which the event described in paragraph (f)(2)(i) or (f)(2)(ii) of this section occurs. The new domestic use agreement must be signed under penalties of perjury by the person who signs the return and must include the following items:

(*1*) A statement that the document submitted is an election and agreement under the provisions of paragraph (f)(2) of this section.

(*2*) An agreement to assume the same obligations with respect to the dual consolidated loss as the unaffiliated dual resident corporation, unaffiliated domestic owner, or consolidated group, as applicable, that filed the original domestic use agreement (original elector) with respect to that loss. In such a case, obligations of an elector provided under this section shall also be considered to be obligations of a subsequent elector.

(*3*) In the event of a transaction described in section 384(a) involving the subsequent elector, an agreement to treat any potential recapture amount under paragraph (h) of this section with respect to the dual consolidated loss as unrealized built-in gain for purposes of section 384(a), subject to any applicable exceptions (for example, the threshold requirements under section 382(h)(3)(B)). The potential recapture amount treated as unrealized built-in gain under this paragraph (f)(2)(iii)(A)(*3*) may be reduced to the extent permitted by paragraph (h)(2)(i) of this section.

(*4*) In the case of a multiple-party event described in paragraph (f)(2)(i) of

this section, an agreement to be subject to the rules provided in paragraph (h)(3) of this section.

(*5*) The name, U.S. taxpayer identification number, and address of the original elector and prior subsequent electors, if any, with respect to the dual consolidated loss.

(B) *Statement filed by original elector.* In the case of a multiple-party event described in paragraph (f)(2)(i) of this section, the original elector must file a statement that is attached to and filed by the due date (including extensions) of its income tax return for the taxable year in which the event occurs. The statement must be labeled ''Original Elector Statement'' at the top of the page, must be signed under penalties of perjury by the person who signs the tax return, and must include the following items:

(*1*) A statement that the document submitted is an election and agreement under the provisions of paragraph (f)(2) of this section.

(*2*) An agreement to be subject to the rules provided in paragraph (h)(3) of this section.

(*3*) The name, U.S. taxpayer identification number, and address of the subsequent elector.

(3) *Certain transfers qualifying for the de minimis exception to foreign use.* If a transaction or event qualifies for the de minimis exception to foreign use described in §1.1503(d)–3(c)(5), the transaction or event shall not constitute a triggering event under paragraph (e)(1)(iv) (transfers of assets) or (v) (transfers of an interest in a separate unit) of this section. For purposes of the preceding sentence, the transaction or event shall include deemed transfers that occur as a result of the transaction or event. See, for example, deemed transfers occurring pursuant to Rev. Rul. 99–5 (1999–1 CB 434), see §601.601(d)(2)(ii)(*b*), and section 708 and the related regulations. See also §1.1503(d)–7 *Example 5*. This paragraph (f)(3) only applies if the entire transaction or event qualifies for the de minimis exception to foreign use. For example, if a domestic owner sells five percent of a separate unit to a foreign corporation, which would qualify for the de minimis exception to foreign use if it were the only transfer, but pursuant to the same transaction also sells 70 percent of the same separate unit to another corporation in a manner that results in a triggering event under paragraph (e)(1)(v) of this section, this paragraph shall not apply to prevent the transaction from resulting in a triggering event.

(4) *Deemed transactions as a result of certain transfers that do not result in a foreign use.* The rules in this paragraph (f)(4) apply where the assets of, or the interests in, a separate unit are transferred in a transaction that would not result in a foreign use and, but for resulting deemed transactions or events, would not result in a triggering event described in paragraph (e)(1) of this section. For purposes of this paragraph (f)(4), deemed transactions or events shall include transactions or events that are deemed to occur pursuant to Rev. Rul. 99–5 and section 708 and the related regulations. In such a case, the deemed transactions shall not result in a triggering event under paragraph (e)(1)(iv) (transfers of assets) or (v) (transfers of an interest in a separate unit) of this section. See also §1.1503(d)–7 *Example 35*.

(5) *Compulsory transfers.* Transfers of the assets or stock of a dual resident corporation, or of the assets or interests in a separate unit, shall not constitute a triggering event (including a foreign use that occurs as a result of, or following, the transfer) if such transfers are—

(i) Legally required by a foreign government as a necessary condition of doing business in a foreign country;

(ii) Compelled by a genuine threat of immediate expropriation by a foreign government; or

(iii) The result of the expropriation of assets by the foreign government.

(6) *Subsequent triggering events.* Any triggering event described in paragraph (e) of this section that occurs subsequent to one of the transactions described in this paragraph (f), and that itself does not meet any of the exceptions provided in this paragraph (f), shall require recapture under paragraph (h) of this section by the elector or subsequent elector, as applicable.

(g) *Annual certification reporting requirement*. Unless and until the domestic use agreement is terminated pursuant to paragraph (j) of this section, the elector must file a certification, labeled ''Certification of Dual Consolidated Loss'' at the top of the page, that is attached to, and filed by the due date (including extensions) of, its income tax return for each taxable year during the certification period. The certification must provide that there has been no foreign use of the dual consolidated loss. The certification must identify the dual consolidated loss to which it pertains by setting forth the elector's year in which the loss was incurred and the amount of such loss. In addition, the certification must warrant that arrangements have been made to ensure that there will be no foreign use of the dual consolidated loss and that the elector will be informed of any such foreign use. If applicable, the certification must include a notification that an excepted triggering event under paragraph (f)(2) of this section has occurred with respect to the dual consolidated loss within the taxable year being certified. If dual consolidated losses of more than one taxable year are subject to the rules of this paragraph (g), the certification for those years may be combined in a single document, but each dual consolidated loss must be separately identified. See §1.1503(d)–3(e)(2)(ii) for additional certifications required where taxpayers elect the stand-alone exception of §1.1503(d)–3(e)(2).

(h) *Recapture of dual consolidated loss and interest charge*—(1) *Presumptive rules*—(i) *Amount of recapture*. Except as otherwise provided in this section, upon the occurrence of a triggering event described in paragraph (e) of this section that does not meet any of the exceptions provided in paragraph (f) of this section, the dual resident corporation or domestic owner of the separate unit shall recapture as gross income the total amount of the dual consolidated loss to which the triggering event applies on its income tax return for the taxable year in which the triggering event occurs (or, when the triggering event is a foreign use of the dual consolidated loss, the taxable year that includes the last day of the foreign taxable year during which such foreign use occurs). See §1.1503(d)–5(c)(4)(vi) for rules with respect to the attribution of recapture income to a separate unit. See also §1.1503(d)–7 *Examples 38* through *40*.

(ii) *Interest charge*. In connection with the recapture, the elector shall pay an interest charge. An interest charge may be due even if the amount of recapture income is reduced to zero pursuant to paragraph (h)(2)(i) of this section. See §1.1503(d)–7(c) *Example 39*. Except as otherwise provided in this section, the amount of the interest shall be computed under the rules of section 6601(a) by treating the additional tax resulting from the recapture as though it had been due and unpaid as of the date for payment of the tax for the taxable year in which the taxpayer received a tax benefit from the dual consolidated loss. For purposes of this paragraph (h)(1)(ii), a tax benefit shall be considered to have arisen in a taxable year in which the losses or deductions taken into account in computing the dual consolidated loss reduced U.S. taxable income. For the purpose of computing the interest charge, the additional tax resulting from the recapture is determined by treating the recapture income as the last income earned in the year of recapture. The interest shall be computed to the date for payment of the tax for the year of recapture and the interest thus computed becomes a part of the tax liability for that taxable year. See section 6601 for the computation of interest on a tax liability that it is not paid timely. The recapture interest charge shall be deductible to the same extent as interest under section 6601.

(2) *Reduction of presumptive recapture amount and presumptive interest charge*—(i) *Amount of recapture*. The dual resident corporation or domestic owner may recapture an amount less than the total dual consolidated loss if the elector demonstrates, to the satisfaction of the Commissioner, the lesser amount described in this paragraph (h)(2)(i). The reduction in the amount of recapture is the amount by which the dual consolidated loss would have offset other taxable income reported on a timely filed U.S. income tax return for any taxable year up to and including

the taxable year of the triggering event (or, when the triggering event is a foreign use of the dual consolidated loss, the taxable year that includes the last day of the foreign taxable year during which such foreign use occurs) if no domestic use election had been made for the loss such that it was subject to the domestic use limitation of §1.1503(d)–4(b) (and therefore subject to the limitation under §1.1503(d)–4(c)). For this purpose, the rules for attributing items of income, gain, deduction, and loss under §1.1503(d)–5 shall apply. An elector using this rebuttal rule must prepare a separate accounting showing the income for each year that would have offset the dual resident corporation's or separate unit's recapture amount if no domestic use election had been made for the dual consolidated loss. The separate accounting must be signed under penalties of perjury by the person who signs the elector's tax return, must be labeled ''Reduction of Recapture Amount'' at the top of the page, and must indicate that it is submitted under the provisions of this paragraph (h)(2)(i). The accounting must be attached to, and filed by the due date (including extensions) of, the elector's income tax return for the taxable year in which the triggering event occurs. See §1.1503(d)–7(c) *Examples 38* through *40*.

(ii) *Interest charge*. The interest charge imposed under this section may be reduced if the elector demonstrates, to the satisfaction of the Commissioner, that the net interest owed would have been less than that provided in paragraph (h)(1)(ii) of this section if the elector had filed an amended return for the taxable year in which the recaptured dual consolidated loss was incurred, and for any other affected taxable years up to and including the taxable year of recapture, if no domestic use election had been made for the dual consolidated loss such that it had been subject to the restrictions of §1.1503(d)–4(b) (and therefore subject to the limitations under §1.1503(d)–4(c)). An elector using this rebuttal rule must prepare a computation demonstrating the reduction in the net interest owed as a result of treating the dual consolidated loss as a loss subject to the restrictions of §1.1503(d)–4(b) (and therefore subject to the limitations under §1.1503(d)–4(c)). The computation must be labeled ''Reduction of Interest Charge'' at the top of the page and must indicate that it is submitted under the provisions of this paragraph (h)(2)(ii). The computation must be signed under penalties of perjury by the person who signs the elector's tax return, and must be attached to, and filed by the due date (including extensions) of, the elector's income tax return for the taxable year in which the triggering event occurs. See §1.1503(d)–7(c) *Examples 39* and *40*.

(3) *Rules regarding multiple-party event exceptions to triggering events*—(i) *Scope*. The rules of this paragraph (h)(3) apply when, after a triggering event described in paragraph (e) of this section with respect to which the requirements of paragraph (f)(2)(i) of this section were met (excepted event), a triggering event under paragraph (e) of this section occurs, and no exception applies to such triggering event under paragraph (f) of this section (subsequent triggering event). See §1.1503(d)–7(c) *Examples 36* and *37*.

(ii) *Original elector and prior subsequent electors not subject to recapture or interest charge*—(A) Except to the extent otherwise provided in this paragraph (h)(3), neither the original elector nor any prior subsequent elector shall be subject to the rules of this paragraph (h) with respect to dual consolidated losses subject to the original domestic use agreement.

(B) In the case of a dual consolidated loss with respect to which multiple excepted events have occurred, only the subsequent elector that owns the dual resident corporation or separate unit at the time of the subsequent triggering event shall be subject to the recapture rules of this paragraph (h). For purposes of this paragraph (h), the term prior subsequent elector refers to all other subsequent electors.

(iii) *Recapture tax amount and required statement*—(A) *In general*. If a subsequent triggering event occurs, the subsequent elector shall take into account the recapture tax amount as determined under paragraph (h)(3)(iii)(B) of this section. The subsequent elector must prepare a statement that computes the recapture tax amount, as

provided under paragraph (h)(3)(iii)(B) of this section, with respect to the dual consolidated loss subject to the new domestic use agreement. This statement must be attached to, and filed by the due date (including extensions) of, the subsequent elector's income tax return for the taxable year in which the subsequent triggering event occurs (or, when the subsequent triggering event is a foreign use of the dual consolidated loss, the taxable year that includes the last day of the foreign taxable year during which such foreign use occurs). The statement must be signed under penalties of perjury by the person who signs the return. The statement must be labeled ''Statement Identifying Liability'' at the top and, in addition to the calculation of the recapture tax amount, must include the following items, in paragraphs labeled to correspond with the items set forth in paragraphs (h)(3)(iii)(A)(*1*) through (*3*) of this section:

(*1*) A statement that the document is submitted under the provisions of § 1.1503(d)–6(h)(3)(iii).

(*2*) A statement identifying the amount of the dual consolidated losses at issue and the taxable years in which they were used.

(*3*) The name, address, and taxpayer identification number of the original elector and all prior subsequent electors.

(B) *Recapture tax amount*. The recapture tax amount equals the excess (if any) of—

(*1*) The income tax liability of the subsequent elector for the taxable year that includes the amount of recapture and related interest charge with respect to the dual consolidated losses that are recaptured as a result of the subsequent triggering event, as provided under paragraphs (h)(1) and (h)(2) of this section; over

(*2*) The income tax liability of the subsequent elector for such taxable year, computed by excluding the amount of recapture and related interest charge described in paragraph (h)(3)(iii)(B)(*1*) of this section.

(iv) *Tax assessment and collection procedures*—(A) *In general*—(*1*) *Subsequent elector*. An assessment identifying an income tax liability of the subsequent elector is considered an assessment of the recapture tax amount where the recapture tax amount is part of the income tax liability being assessed and the recapture tax amount is reflected in a statement attached to the subsequent elector's income tax return as provided under paragraph (h)(3)(iii) of this section.

(*2*) *Original elector and prior subsequent electors*. The assessment of the recapture tax amount as set forth in paragraph (h)(3)(iv)(A)(*1*) of this section shall be considered as having been properly assessed as an income tax liability of the original elector and of each prior subsequent elector, if any. The date of such assessment shall be the date the income tax liability of the subsequent elector was properly assessed. The Commissioner may collect all or a portion of such recapture tax amount from the original elector and/or the prior subsequent electors under the circumstances set forth in paragraph (h)(3)(iv)(B) of this section.

(B) *Collection from original elector and prior subsequent electors; joint and several liability*—(*1*) *In general*. If the subsequent elector does not pay in full the income tax liability that includes a recapture tax amount, the Commissioner may collect that portion of the unpaid balance of such income tax liability attributable to the recapture tax amount in full or in part from the original elector and/or from any prior subsequent elector, provided that the following conditions are satisfied with respect to such elector:

(*i*) The Commissioner properly has assessed the recapture tax amount pursuant to paragraph (h)(3)(iv)(A)(*1*) of this section.

(*ii*) The Commissioner has issued a notice and demand for payment of the recapture tax amount to the subsequent elector in accordance with § 301.6303–1 of this chapter.

(*iii*) The subsequent elector has failed to pay all of the recapture tax amount by the date specified in such notice and demand.

(*iv*) The Commissioner has issued a notice and demand for payment of the unpaid portion of the recapture tax amount to the original elector, or prior subsequent elector (as the case may be), in accordance with § 301.6303–1 of this chapter.

(*2*) *Joint and several liability*. The liability imposed under this paragraph (h)(3)(iv)(B) on the original elector and each prior subsequent elector shall be joint and several.

(C) *Allocation of partial payments of tax*. If the subsequent elector's income tax liability for a taxable period includes a recapture tax amount, and if such income tax liability is satisfied in part by payment, credit, or offset, such payment, credit or offset shall be allocated first to that portion of the income tax liability that is not attributable to the recapture tax amount, and then to that portion of the income tax liability that is attributable to the recapture tax amount.

(D) *Refund*. If the Commissioner makes a refund of any income tax liability that includes a recapture tax amount, the Commissioner shall allocate and pay the refund to each elector who paid a portion of such income tax liability as follows:

(*1*) The Commissioner shall first determine the total amount of recapture tax paid by and/or collected from the original elector and from any prior subsequent electors. The Commissioner shall then allocate and pay such refund to the original elector and prior subsequent electors, with each such elector receiving an amount of such refund on a pro rata basis, not to exceed the amount of recapture tax paid by and/or collected from such elector.

(*2*) The Commissioner shall pay the balance of such refund, if any, to the subsequent elector.

(v) *Definition of income tax liability*. Solely for purposes of paragraph (h)(3) of this section, the term *income tax liability* means the income tax liability imposed on a domestic corporation under title 26 of the United States Code for a taxable year, including additions to tax, additional amounts, penalties, and any interest charge related to such income tax liability.

(vi) *Example*. See §1.1503(d)–7(c) *Example 36*.

(4) *Computation of taxable income in year of recapture*—(i) *Presumptive rule*. Except to the extent provided in paragraph (h)(4)(ii) of this section, for purposes of computing the taxable income for the year of recapture, no current, carryover or carryback losses may offset and absorb the recapture amount.

(ii) *Exception to presumptive rule*. The recapture amount included in gross income may be offset and absorbed by that portion of the elector's net operating loss carryover that is attributable to the dual resident corporation or separate unit that incurred the dual consolidated loss being recaptured, if the elector demonstrates, to the satisfaction of the Commissioner, the amount of such portion of the carryover. The principles of §1.1502–21(b)(2)(iv) shall apply for purposes of determining whether any portion of a net operating loss carryover is attributable to the dual resident corporation or separate unit. In the case of a separate unit, such determination shall be made by treating the separate unit as a domestic corporation and a member of the consolidated group composing its unaffiliated domestic owner, or members of the consolidated group of which its affiliated domestic owner is a member, as appropriate. An elector utilizing this rebuttal rule must prepare a computation demonstrating the amount of net operating loss carryover that, under this paragraph (h)(4)(ii), may absorb the recapture amount included in gross income. Such computation must be signed under penalties of perjury and attached to and filed by the due date (including extensions) of, the income tax return for the taxable year in which the triggering event occurs (or, when the triggering event is a foreign use of the dual consolidated loss, the taxable year that includes the last day of the foreign taxable year during which such foreign use occurs).

(5) *Character and source of recapture income*. The amount recaptured under this paragraph (h) shall be treated as ordinary income. Except as provided in the prior sentence, such income shall be treated, as applicable, as income from the same source, having the same character, and falling within the same separate category, for all purposes, including sections 904(d) and 907, to which the items of deduction or loss composing the dual consolidated loss were allocated and apportioned, as provided under sections 861(b), 862(b), 863(a), 864(e), 865, and the related regulations. For this determination, the

pro rata computation of the items of deduction or loss composing the dual consolidated loss as described in §1.1503(d)–4(c)(4) shall apply. See §1.1503(d)–7(c) *Example 38*.

(6) *Reconstituted net operating loss*—(i) *General rule*. Except as provided in paragraphs (h)(6)(ii) and (iii) of this section, commencing in the taxable year immediately following the year in which the dual consolidated loss is recaptured, the dual resident corporation, or the domestic owner of the separate unit, that incurred the dual consolidated loss that is recaptured shall be treated as having a net operating loss (reconstituted net operating loss) in an amount equal to the amount actually recaptured under this paragraph (h). If a domestic corporation (transferee) acquires the assets of the dual resident corporation or domestic owner in a transaction described in section 381(a), the preceding sentence shall be applied by treating the transferee as the dual resident corporation or domestic owner, as applicable. In a case to which this paragraph (h)(6) applies, the transferee corporation shall be treated as having a reconstituted net operating loss in an amount equal to the amount actually recaptured under this paragraph (h). In no event, however, shall more than one corporation be treated as having a reconstituted net operating loss as a result of a single dual consolidated loss being recaptured. A reconstituted net operating loss of a domestic owner shall be attributable under §1.1503(d)–5 to the separate unit that incurred the dual consolidated loss that was recaptured. Moreover, a reconstituted net operating loss shall be subject to the domestic use limitation of §1.1503(d)–4(b) (and therefore subject to the limitation under §1.1503(d)–4(c)), without regard to the exceptions contained in paragraphs (b) through (d) of this section (relating to elective agreements in place between the United States and a foreign country, the ability to demonstrate no possibility of a foreign use, and a domestic use election, respectively). The reconstituted net operating loss shall be available only for carryover, under section 172(b), to taxable years following the taxable year of recapture. For purposes of determining the remaining carryover period, the reconstituted net operating loss shall be treated as if it had been recognized in the taxable year in which the dual consolidated loss that is the basis of the recapture amount was incurred. See §1.1503(d)–7(c) *Examples 36, 38,* and *40*.

(ii) *Exception*. Paragraph (h)(6)(i) of this section shall not apply to the extent the dual consolidated loss that is the basis of the recapture amount would have been eliminated pursuant to §1.1503(d)–4(d) if no domestic use election had been made for such loss. See §1.1503(d)–7(c) *Example 40*.

(iii) *Special rule for recapture following multiple-party event exception to a triggering event*. This paragraph applies to an excepted event described in paragraph (f)(2)(i)(B) of this section that is followed by a subsequent triggering event requiring recapture as described in paragraph (f)(6) of this section. In such a case, the domestic corporation that owns, directly or indirectly, the assets of the dual resident corporation, or the assets of or the interests in a separate unit, immediately following the excepted event shall be treated as if it incurred the dual consolidated loss that is recaptured for purposes of applying paragraph (h)(6)(i) of this section. See §1.1503(d)–7(c) *Example 36*.

(i) [Reserved]

(j) *Termination of domestic use agreement and annual certifications*—(1) *Rebuttals, exceptions to triggering events, and recapture*. The domestic use agreement filed with respect to a dual consolidated loss shall terminate prior to the end of the certification period and have no further effect if—

(i) An elector is able to rebut the presumption of a triggering event pursuant to the general rule in paragraph (e)(2)(i) of this section;

(ii) An event described in paragraph (e)(1) of this section is not a triggering event as a result of the application of paragraphs (f)(2)(i) or (ii) (relating to events requiring a new domestic use agreement) of this section; this paragraph (j)(1)(ii) does not, however, apply to terminate the new domestic use agreement filed in connection with the event pursuant to paragraph (f)(2)(iii)(A) of this section. See also paragraph (h)(3)(iv) of this section regarding collection from the original

elector and prior subsequent electors in certain cases; or

(iii) A dual consolidated loss is recaptured pursuant to paragraph (h) of this section. See §1.1503(d)–7(c) *Examples 32* through *34*.

(2) *Termination of ability for foreign use*—(i) *In general*. A domestic use agreement filed with respect to a dual consolidated loss shall terminate and have no further effect as of the end of a taxable year if the elector—

(A) Demonstrates, to the satisfaction of the Commissioner, that as of the end of such taxable year no foreign use (as defined in §1.1503(d)-3) of the dual consolidated loss can occur in any other year by any means; and

(B) Prepares a statement described in paragraph (j)(2)(ii) of this section that is attached to, and filed by the due date (including extensions) of, its U.S. income tax return for such taxable year.

(ii) *Statement*. The statement described in this paragraph (j)(2)(ii) must be signed under penalties of perjury by the person who signs the return. The statement must be labeled ''Termination of Ability for Foreign Use'' at the top of the page and must include the following information, in paragraphs labeled to correspond with the following:

(A) A statement that the document is submitted under the provisions of paragraph (j)(2) of this section.

(B) The information required by paragraph (c)(2)(ii) of this section.

(C) A statement of the amount of the dual consolidated loss at issue and the year in which such dual consolidated loss was incurred.

(D) The information described in paragraph (c)(2)(iv) of this section that supports the conclusion that no foreign use can occur as provided in paragraph (j)(2)(i)(A) of this section.

(3) *Agreements filed in connection with stand-alone exception*. See §1.1503(d)–3(e)(2)(iii) for the termination of domestic use agreements filed in connection with the stand-alone exception to the mirror legislation rule when a subsequent election is made under paragraph (b) of this section (relating to agreements entered into between the United States and a foreign country).

[T.D. 9315, 72 FR 12914, Mar. 19, 2007]

§ 1.1503(d)–7 Examples.

(a) *In general*. This section provides examples that illustrate the application of §§1.1503(d)–1 through 1.1503(d)–6. This section also provides facts that are presumed for such examples.

(b) *Presumed facts for examples*. For purposes of the examples in this section, unless otherwise indicated, the following facts are presumed:

(1) Each entity has only a single class of equity outstanding, all of which is held by a single owner.

(2) P, a domestic corporation and the common parent of the P consolidated group, owns S, a domestic corporation and a member of the P consolidated group.

(3) DRC_X, a domestic corporation, is subject to Country X tax on its worldwide income or on a residence basis, and is a dual resident corporation.

(4) $DE1_X$ and $DE2_X$ are both Country X entities, subject to Country X tax on their worldwide income or on a residence basis, and disregarded as entities separate from their owners for U.S. tax purposes. $DE3_Y$ is a Country Y entity, subject to Country Y tax on its worldwide income or on a residence basis, and disregarded as an entity separate from its owner for U.S. tax purposes. All the interests in $DE1_X$, $DE2_X$, and $DE3_Y$ constitute hybrid entity separate units.

(5) FB_X is a Country X business operation that, if carried on by a U.S. person, would constitute a foreign branch, as defined in §1.367(a)–6T(g)(1), and is a Country X foreign branch separate unit.

(6) Neither the assets nor the activities of an entity constitute a foreign branch separate unit.

(7) FS_X is a Country X entity that is subject to Country X tax on its worldwide income or on a residence basis and is classified as a foreign corporation for U.S. tax purposes.

(8) The applicable foreign country has a consolidation regime that—

(i) Includes as members of a consolidated group any commonly controlled branches and permanent establishments in such jurisdiction, and entities that are subject to tax in such jurisdiction on their worldwide income or on a residence basis; and

(ii) Allows the losses of members of consolidated groups to offset income of other members.

(9) There is no mirror legislation, within the meaning of § 1.1503(d)–3(e)(1), in the applicable foreign country.

(10) There is no elective agreement described in § 1.1503(d)–6(b) between the United States and the applicable foreign country.

(11) There is no income tax convention between the United States and the applicable foreign country.

(12) If a domestic use election, within the meaning of § 1.1503(d)–6(d), is made, all the necessary filings related to such election are properly completed on a timely basis.

(13) If there is a triggering event requiring recapture of a dual consolidated loss, the amount of recapture is not reduced pursuant to § 1.1503(d)–6(h)(2).

(14) There are no other items of income, gain, deduction, and loss. In addition, the United States and the applicable foreign country recognize the same items of income, gain, deduction, and loss in each taxable year.

(15) All taxpayers use the calendar year as their taxable year.

(c) *Examples*. The following examples illustrate the application of §§ 1.1503(d)–1 through 1.1503(d)–6:

Example 1. Separate unit combination rule. (i) *Facts*. P owns $DE3_Y$ which, in turn, owns $DE1_X$. $DE1_X$ owns FB_X. PRS, an entity treated as a partnership for both U.S. and Country X tax purposes, is owned 50 percent by P and 50 percent by an unrelated foreign person. PRS carries on a business operation in Country X that, if carried on by a U.S. person, would constitute a foreign branch within the meaning of § 1.367(a)–6T(g)(1). In addition, P owns DRC_X, a member of the consolidated group of which P is the parent, which carries on business operations in Country X that constitute a foreign branch within the meaning of § 1.367(a)–6T(g)(1). S owns $DE2_X$.

(ii) *Result*. Pursuant to § 1.1503(d)–1(b)(4)(ii), the interest in $DE1_X$, the interest in $DE2_X$, FB_X, P's share of the Country X business operations carried on by PRS (which is owned by P indirectly through its interest in PRS), and DRC_X's Country X business operations are combined and treated as a single separate unit of the consolidated group of which P is the parent. This is the case regardless of whether the losses of each individual separate unit are made available to offset the income of the other individual separate units under Country X tax laws. Because DRC_X is a dual resident corporation, it is not combined and treated as part of this combined separate unit and, as a result, DRC_X's income or dual consolidated loss is not taken into account in determining the income or dual consolidated loss of the combined separate unit. In addition, P's interest in $DE3_Y$ is not combined and is another separate unit because it is subject to tax in Country Y, rather than Country X.

Example 2. Definition of a separate unit and application of domestic use limitation—foreign branch separate unit. (i) *Facts*. P carries on business operations in Country X that constitute a permanent establishment under the U.S.–Country X income tax convention. In year 1, a loss is attributable to P's Country X permanent establishment, as determined under § 1.1503(d)–5.

(ii) *Result*. Under §§ 1.1503(d)–1(b)(4)(i)(A) and 1.367(a)–6T(g)(1), P's Country X permanent establishment constitutes a foreign branch separate unit. Therefore, the year 1 loss attributable to the foreign branch separate unit constitutes a dual consolidated loss pursuant to § 1.1503(d)–1(b)(5)(ii). The dual consolidated loss rules apply to the dual consolidated loss even though there is no affiliate of the foreign branch separate unit in Country X, because it is still possible that all or a portion of the dual consolidated loss can be put to a foreign use. For example, there may be a foreign use with respect to a Country X affiliate acquired in a year subsequent to the year in which the dual consolidated loss was incurred. See § 1.1503(d)–6(a)(2). Accordingly, unless an exception under § 1.1503(d)–6 applies (such as a domestic use election), the year 1 dual consolidated loss attributable to P's Country X permanent establishment is subject to the domestic use limitation rule of § 1.1503(d)–4(b). As a result, pursuant to § 1.1503(d)–4(c), the year 1 dual consolidated loss cannot offset income of P that is not attributable to its Country X foreign branch separate unit, nor can it offset income of any other domestic affiliate. The loss can, however, offset income of the Country X foreign branch separate unit, subject to the application of § 1.1503(d)–4(c). The result would be the same even if Country X did not have a consolidation regime that includes as members of consolidated groups Country X branches or permanent establishments of nonresident corporations. The dual consolidated loss rules apply even in the absence of a consolidation regime in the foreign country because it is possible that all or a portion of a dual consolidated loss can be put to a foreign use by other means, such as through a sale, merger, or similar transaction. See § 1.1503(d)–6(a)(2).

(iii) *Alternative Facts*. The facts are the same as in paragraph (i) of this *Example 2*, except that P's Country X business operations constitute a foreign branch as defined in § 1.367(a)–6T(g)(1), but do not constitute a

permanent establishment under the U.S.–Country X income tax convention. Although the activities carried on by P in Country X would otherwise constitute a foreign branch separate unit as described in §1.1503(d)–1(b)(4)(i)(A), the exception under §1.1503(d)–1(b)(4)(iii) applies because the activities do not constitute a permanent establishment under the U.S.–Country X income tax convention. Thus, the Country X business operations do not constitute a foreign branch separate unit, and the year 1 loss is not subject to the dual consolidated loss rules. If P instead carried on its Country X business operations through $DE1_X$, then the exception under §1.1503(d)–1(b)(4)(iii) would not apply because P carries on the business operations through a hybrid entity and, as a result, the business operations would constitute a foreign branch separate unit. Thus, in such a case the year 1 loss would be subject to the dual consolidated loss rules.

Example 3. Domestic use limitation—foreign branch separate unit owned through a partnership. (i) *Facts.* P and S organize a partnership, PRS_X, under the laws of Country X. PRS_X is treated as a partnership for both U.S. and Country X tax purposes. PRS_X owns FB_X. PRS_X earns U.S. source income that is unconnected with its FB_X branch operations, and such income is not subject to tax by Country X. In addition, such U.S. source income is not attributable to FB_X under §1.1503(d)–5.

(ii) *Result.* Under §1.1503(d)–1(b)(4)(i)(A), P's and S's shares of FB_X owned indirectly through their interests in PRS_X are individual foreign branch separate units. Pursuant to §1.1503(b)–1(b)(4)(ii), these individual separate units are combined and treated as a single separate unit of the consolidated group of which P is the parent. Unless an exception under §1.1503(d)–6 applies, any dual consolidated loss attributable to FB_X cannot offset income of P or S (other than income attributable to FB_X, subject to the application of §1.1503(d)–4(c)), including their distributive share of the U.S. source income earned through their interests in PRS_X, nor can it offset income of any other domestic affiliates.

Example 4. Definition of a separate unit and domestic use limitation—interest in hybrid entity partnership and indirectly owned foreign branch separate unit. (i) *Facts.* HPS_X is a Country X entity that is subject to Country X tax on its worldwide income. HPS_X is classified as a partnership for Federal tax purposes. P, S, and FS_X, are the sole partners of HPS_X. For U.S. tax purposes, P, S, and FS_X each has an equal interest in each item of HPS_X's profit or loss. HPS_X carries on operations in Country Y that, if carried on by a U.S. person, would constitute a foreign branch within the meaning of §1.367(a)–6T(g)(1).

(ii) *Result.* Under §1.1503(d)–1(b)(4)(i)(B), the partnership interests in HPS_X held by P and S are individual hybrid entity separate units. These individual separate units are combined into a single separate unit under §1.1503(d)–1(b)(4)(ii). In addition, P's and S's share of the Country Y operations owned indirectly through their interests in HPS_X are individual foreign branch separate units under §1.1503(d)–1(b)(4)(i)(B). These individual separate units are also combined into a single separate unit under §1.1503(d)–1(b)(4)(ii). Unless an exception under §1.1503(d)–6 applies, dual consolidated losses attributable to P's and S's combined interests in HPS_X can only be used to offset income attributable to their combined interests in HPS_X (other than income attributable to P's and S's combined interests in the Country Y foreign branch separate unit), subject to the application of §1.1503(d)–4(c). Similarly, dual consolidated losses attributable to P's and S's combined interests in the Country Y operations of HPS_X can only be used to offset income attributable to their combined interests in such Country Y operations, subject to the application of §1.1503(d)–4(c). Neither FS_X's interest in HPS_X, nor its share of the Country Y operations owned by HPS_X, is a separate unit because FS_X is not a domestic corporation.

Example 5. Foreign use—general rule and de minimis reduction exception. (i) *Facts.* P owns $DE1_X$. $DE1_X$ owns FS_X. In year 1, there is a $100x loss attributable to P's interest in $DE1_X$ that is a dual consolidated loss. Also in year 1, FS_X earns $200x of income. $DE1_X$ and FS_X file a Country X consolidated tax return. For Country X tax purposes, the year 1 $100x loss of $DE1_X$ is used to offset $100x of year 1 income generated by FS_X. Under Country X tax law, unused losses are carried forward and available to offset income in subsequent taxable years.

(ii) *Result.* The $100x loss attributable to P's interest in $DE1_X$ is available to, and in fact does, offset FS_X's income under the laws of Country X. In addition, under U.S. tax principles, such income is considered to be an item of FS_X, a foreign corporation. As a result, under §1.1503(d)–3(a), there has been a foreign use of the year 1 dual consolidated loss attributable to P's interest in $DE1_X$. Therefore, P cannot make a domestic use election with respect to the loss as provided under §1.1503(d)–6(d)(2), and such loss will be subject to the domestic use limitation rule of §1.1503(d)–4(b). The result would be the same even if FS_X, under Country X tax law, had no income against which the dual consolidated loss of $DE1_X$ could be offset (unless FS_X's ability to use the loss under Country X tax law requires an election, and no such election is made).

(iii) *Alternative Facts.* The facts are the same as in paragraph (i) of this *Example 5,* except that FS_X cannot use the loss of $DE1_X$

under Country X tax law without an election, and no such election is made. Pursuant to the exception in § 1.1503(d)–3(c)(2), there is no foreign use of the year 1 dual consolidated loss attributable to P's interest in $DE1_X$. In addition, P files a domestic use election with respect to the year 1 dual consolidated loss attributable to its interest in $DE1_X$ and, at the beginning of year 3, P sells its interest in $DE1_X$ to F, a Country Y entity that is a foreign corporation. The sale of the interest in $DE1_X$ to F results in a foreign use triggering event pursuant to § 1.1503(d)–6(e)(1)(i) because, immediately after the sale, the loss attributable to the interest in $DE1_X$ carries over under Country X law and, therefore, is available under U.S. tax principles to offset income of the owner of the interest in $DE1_X$ which, in the hands of F, is not a separate unit. It is also a foreign use because the loss is available under U.S. tax principles to offset the income of F, a foreign corporation. See § 1.1503(d)–3(a)(1). Finally, the transfer is a triggering event pursuant to § 1.1503(d)–6(e)(1)(iv) and (v).

(iv) *Alternative Facts.* The facts are the same as in paragraph (iii), of this *Example 5*, except that P only sells 5 percent of its interest in $DE1_X$ to F. Pursuant to Rev. Rul. 99–5 (1999–1 CB 434), see § 601.601(d)(2)(ii)(*b*) of this chapter, the transaction is treated as if P sold 5 percent of its interest in each of $DE1_X$'s assets to F, and then immediately thereafter P and F transferred their interests in the assets of $DE1_X$ to a partnership in exchange for an ownership interest therein. The sale of the 5 percent interest in $DE1_X$ generally results in a foreign use triggering event because a portion of the dual consolidated loss carries over under Country X tax law and is available under U.S. tax principles to offset income of the owner of the interest in $DE1_X$, a hybrid entity, which in the hands of F is not a separate unit. It is also a foreign use because the loss is available under U.S. tax principles to offset the income of F, a foreign corporation. See § 1.1503(d)–3(a)(1). However, pursuant to the exception under § 1.1503(d)–3(c)(5) (relating to a de minimis reduction of an interest in a separate unit), such availability does not result in a foreign use. In addition, pursuant to § 1.1503(d)–6(f)(1) and (3), the deemed transfers pursuant to Rev. Rul. 99–5 as a result of the sale are not treated as triggering events described in § 1.1503(d)–6(e)(1)(iv) or (v).

Example 6. Foreign use and indirect foreign use—foreign reverse hybrid structure and disregarded payments. (i) *Facts.* P owns $DE1_X$. $DE1_X$ owns 99 percent and S owns 1 percent of FRH_X, a Country X partnership that elected to be treated as a corporation for U.S. tax purposes. FRH_X conducts a trade or business in Country X. In year 1, $DE1_X$ incurs interest expense on a third-party loan, which constitutes a dual consolidated loss attributable to P's interest in $DE1_X$. In year 1, for Country X tax purposes, $DE1_X$ takes into account its distributive share of income generated by FRH_X and offsets such income with its interest expense.

(ii) *Result.* In year 1, the dual consolidated loss attributable to P's interest in $DE1_X$ is available to, and in fact does, offset income recognized in Country X and, under U.S. tax principles, the income is considered to be income of FRH_X, a foreign corporation. Accordingly, pursuant to § 1.1503(d)–3(a)(1), there is a foreign use of the dual consolidated loss. Therefore, P cannot make a domestic use election with respect to the year 1 dual consolidated loss attributable to its interest in $DE1_X$, as provided under § 1.1503(d)–6(d)(2), and such loss will be subject to the domestic use limitation rule of § 1.1503(d)–4(b).

(iii) *Alternative Facts.* (A) The facts are the same as in paragraph (i) of this *Example 6*, except as follows. Instead of owning $DE1_X$, P owns $DE3_Y$ which, in turn, owns $DE1_X$. In addition, $DE3_Y$, rather than $DE1_X$, is the obligor on the third-party loan and therefore incurs the interest expense on such loan. Finally, $DE3_Y$ on-lends the loan proceeds from the third-party loan to $DE1_X$, and $DE1_X$ pays interest to $DE3_Y$ on such loan that is generally disregarded for U.S. tax purposes.

(B) Pursuant to § 1.1503(d)–5(c)(1)(ii), for purposes of calculating income or a dual consolidated loss, $DE3_Y$ and $DE1_X$ do not take into account interest income or interest expense, respectively, with respect to amounts paid on the disregarded loan from $DE3_Y$ to $DE1_X$. As a result, such items neither create a dual consolidated loss with respect to the interest in $DE1_X$, nor do they reduce (or eliminate) the dual consolidated loss attributable to the interest in $DE3_Y$. Thus, in year 1, there is a dual consolidated loss attributable to P's interest in $DE3_Y$, but not to P's indirect interest in $DE1_X$.

(C) In year 1, interest expense paid by $DE1_X$ to $DE3_Y$ on the disregarded loan is taken into account as a deduction in computing $DE1_X$'s taxable income for Country X tax purposes, but does not give rise to a corresponding item of income or gain for U.S. tax purposes (because it is generally disregarded). In addition, such interest has the effect of making an item of deduction or loss composing the dual consolidated loss attributable to P's interest in $DE3_Y$ available for a foreign use. This is the case because it may reduce or offset items of deduction or loss composing the dual consolidated loss for foreign tax purposes, and creates another deduction or loss that may reduce or offset income of $DE1_X$ for foreign tax purposes that, under U.S. tax principles, is treated as income of FRH_X, a foreign corporation. Moreover, because the disregarded item is incurred or taken into account as interest for foreign tax purposes, it is deemed to have been incurred or taken into account with a principal purpose of

avoiding the provisions of section 1503(d). Accordingly, there is an indirect foreign use of the year 1 dual consolidated loss attributable to P's interest in $DE3_Y$, and P cannot make a domestic use election with respect to such loss as provided under §1.1503(d)–6(d)(2). Thus, the loss will be subject to the domestic use limitation rule of §1.1503(d)–4(b).

Example 7. Indirect foreign use—hybrid instrument. (i) *Facts.* P owns $DE1_X$ which, in turn, owns FS_X. $DE1_X$ borrows cash from an unrelated lender and transfers the cash to FS_X in exchange for an instrument (hybrid instrument). The hybrid instrument is treated as equity for U.S. tax purposes and debt for Country X tax purposes. Interest expense on the loan from the unrelated lender results in a dual consolidated loss being attributable to P's interest in $DE1_X$ in year 1. $DE1_X$ does not elect under Country X law to consolidate with FS_X. In year 1, FS_X distributes its stock as a payment on the hybrid instrument to $DE1_X$. For U.S. tax purposes, such payment is excluded from P's gross income under section 305. However, for Country X tax purposes, such payment is treated as interest and gives rise to a deduction taken into account in computing FS_X's Country X tax liability; the payment also gives rise to interest income to $DE1_X$ for Country X tax purposes.

(ii) *Result.* The payment on the hybrid instrument does not give rise to an item of income or gain for U.S. tax purposes and therefore does not reduce (or eliminate) the dual consolidated loss attributable to P's interest in $DE1_X$. In addition, such payment is taken into account as a deduction in computing FS_X's taxable income for Country X tax purposes. Moreover, such payment has the effect of making an item of deduction or loss composing the dual consolidated loss attributable to P's interest in $DE1_X$ available for a foreign use. This is the case because it may reduce or offset items of deduction or loss composing the dual consolidated loss for foreign tax purposes, and creates a deduction that reduces or offsets income of FS_X for foreign tax purposes that, under U.S. tax principles, is income of a foreign corporation. Further, because the item is incurred, or taken into account, using an instrument that is treated as equity for U.S. tax purposes and debt for foreign tax purposes, it is deemed to have been engaged in with the principal purpose of avoiding the provisions of section 1503(d). As a result, there has been an indirect foreign use of the year 1 dual consolidated loss, and P cannot make a domestic use election with respect to such loss, as provided under §1.1503(d)–6(d)(2). Thus, the year 1 dual consolidated loss will be subject to the domestic use limitation rule of §1.1503(d)–4(b).

Example 8. No indirect foreign use—transaction entered into in the ordinary course of business. (i) *Facts.* P owns $DE1_X$ and FB_Y. FB_Y is a foreign branch separate unit located in Country Y. $DE1_X$ owns FB_X and FS_X. P's interest in $DE1_X$ and FB_X are combined and treated as a single separate unit (Country X separate unit) pursuant to §1.1503(d)–1(b)(4)(ii). Under Country X tax laws, $DE1_X$ elects to consolidate with FS_X. FB_Y engages in the business of providing services and, in connection with its ordinary course of business, provides services to unrelated third parties and to $DE1_X$. As compensation for services, $DE1_X$ makes a payment to FB_Y. Under Country X tax law, the payment is deductible. However, the payment is generally disregarded for U.S. tax purposes and, pursuant to §1.1503(d)–5(c)(1)(ii), is not taken into account in calculating the income or dual consolidated loss attributable to the Country X separate unit or FB_Y. In year 1, the Country X separate unit and FB_Y each has a dual consolidated loss. The dual consolidated loss attributable to the Country X separate unit is subject to the domestic use limitation under §1.1503(d)–4(b) because $DE1_X$ and FS_X elect to consolidate and, as a result, the dual consolidated loss is put to a foreign use.

(ii) *Result.* The payment made by $DE1_X$ to FB_Y in connection with the performance of services is taken into account as a deduction in computing $DE1_X$'s taxable income for Country X tax purposes, but does not give rise to an item of income or gain for U.S. tax purposes. In addition, such payment has the effect of making an item of deduction or loss composing the dual consolidated loss attributable to FB_Y available for a foreign use. This is the case because it may reduce or offset items of deduction or loss composing the dual consolidated loss of FB_Y for foreign tax purposes, and creates another deduction that reduces or offsets income of FS_X for foreign tax purposes (because $DE1_X$ and FS_X elect to file a consolidated return) that, under U.S. tax principles, is income of a foreign corporation. However, the transaction between $DE1_X$ and FB_Y was entered into in the ordinary course of FB_Y's trade or business. As a result, if P can demonstrate to the satisfaction of the Commissioner that the transaction was not entered into with a principal purpose of avoiding the provisions of section 1503(d), FB_Y's year 1 dual consolidated loss will not be treated as having been made available for an indirect foreign use. In such a case, P would be entitled to make a domestic use election with respect to such loss.

Example 9. Foreign use—dual resident corporation with hybrid entity joint venture. (i) *Facts.* P owns DRC_X, a member of the P consolidated group. DRC_X owns 80 percent of HPS_X, a Country X entity that is subject to Country X tax on its worldwide income. HPS_X is classified as a partnership for U.S. tax purposes. FS_X owns the remaining 20 percent of HPS_X. In year 1, DRC_X generates a $100x net operating loss (without regard to items attributable to DRC_X's interest in

HPS_X). Also in year 1, HPS_X generates $100x of income, $80x of which is attributable to DRC_X's interest in HPS_X. DRC_X and HPS_X file a consolidated tax return for Country X tax purposes, and HPS_X offsets its $100x of income with the $100x loss generated by DRC_X.

(ii) *Result*. DRC_X and its interest in HPS_X are not combined because DRC_X is a dual resident corporation and the combination rule under §1.1503(d)–1(b)(4)(ii) only applies to separate units. The $100x year 1 net operating loss incurred by DRC_X (without regard to items attributable to DRC_X's interest in HPS_X) is a dual consolidated loss. In addition, HPS_X is a hybrid entity and DRC_X's interest in HPS_X is a hybrid entity separate unit; however, there is no dual consolidated loss attributable to such separate unit in year 1 (instead, there is $80x of income attributable to such separate unit). DRC_X's year 1 dual consolidated loss offsets $100x of income for Country X purposes, and $20x of such income is, under U.S. tax principles, income of FS_X, which owns an interest in HPS_X that is not a separate unit (in addition, FS_X is a foreign corporation). As a result, pursuant to §1.1503(d)–3(a), there is a foreign use of the year 1 dual consolidated loss of DRC_X, and P cannot make a domestic use election with respect to such loss pursuant to §1.1503(d)–6(d)(2). Therefore, such loss will be subject to the domestic use limitation rule of §1.1503(d)–4(b). The result would be the same even if HPS_X, under Country X laws, had no income against which the dual consolidated loss could be offset (unless the ability to use the loss under Country X laws required an election, and no such election is made).

Example 10. Foreign use—foreign parent corporation. (i) *Facts*. F1 and F2, nonresident alien individuals, each owns 50 percent of FP_X, a Country X entity that is subject to Country X tax on its worldwide income. FP_X is classified as a foreign corporation for U.S. tax purposes. FP_X owns DRC_X. DRC_X is the parent of a consolidated group that includes as a member DS, a domestic corporation. In year 1, DRC_X incurs a dual consolidated loss of $100x and, for Country X tax purposes, FP_X generates $100x of income. In year 1, FP_X elects to consolidate with DRC_X for Country X tax purposes, and the $100x year 1 loss of DRC_X is used to offset the income of FP_X under the laws of Country X. For U.S. tax purposes, the items of FP_X do not constitute items of income in year 1.

(ii) *Result*. The year 1 dual consolidated loss of DRC_X offsets the income of FP_X under the laws of Country X. Pursuant to §1.1503(d)–3(a), the offset constitutes a foreign use because the items constituting such income are considered under U.S. tax principles to be items of a foreign corporation. This is the case even though the United States does not recognize such items as income in year 1. Therefore, DRC_X cannot make a domestic use election with respect to its year 1 dual consolidated loss pursuant to §1.1503(d)–6(d)(2). As a result, such loss will be subject to the domestic use limitation rule of §1.1503(d)–4(b).

(iii) *Alternative Facts*. The facts are the same as in paragraph (i) of this *Example 10*, except that FP_X is classified as a partnership for U.S. tax purposes. The result would be the same as in paragraph (ii) of this *Example 10*, because the offset of the income generated by FP_X is a foreign use pursuant to §1.1503(d)–3(a). This is the case because the items constituting such income are considered under U.S. tax principles to be items of F1 and F2, the owners of interests in FP_X (a hybrid entity), that are not separate units. Moreover, the result would be the same if F1 and F2 owned their interests in FP_X indirectly through another partnership.

Example 11. No foreign use—absence of foreign loss allocation rules. (i) *Facts*. P owns $DE1_X$ and DRC_X. DRC_X is a member of the P consolidated group and owns FS_X. $DE1_X$ owns FB_X. P's interest in $DE1_X$ and P's indirect interest in FB_X are individual separate units that are combined into a single separate unit (Country X separate unit) pursuant to §1.1503(d)–1(b)(4)(ii). In year 1, DRC_X incurs a $200x net operating loss and $200x of income is attributable to P's Country X separate unit. The $200x net operating loss incurred by DRC_X is a dual consolidated loss. FS_X also earns $200x of income in year 1. DRC_X, $DE1_X$, and FS_X file a Country X consolidated tax return. However, Country X has no applicable rules for determining which income is offset by DRC_X's year 1 $200x loss.

(ii) *Result*. Under §1.1503(d)–3(c)(3), DRC_X's $200x loss shall be treated as having been made available to offset the $200x of income attributable to P's Country X separate unit. P's Country X separate unit is not, under U.S. tax principles, a foreign corporation, and there is no interest in $DE1_X$ (which is a hybrid entity) that is not a separate unit. As a result, DRC_X's loss being made available to offset the income attributable to P's Country X separate unit is not considered a foreign use of such loss. Therefore, P can make a domestic use election with respect to DRC_X's year 1 dual consolidated loss.

(iii) *Alternative Facts*. The facts are the same as in paragraph (i) of this *Example 11*, except that in year 1 only $150x of income is attributable to P's Country X separate unit. Because only $150x of income is attributed to P's Country X separate unit, $50x of DRC_X's year 1 dual consolidated loss is treated as being made available to offset the income of FS_X, a foreign corporation, and therefore constitutes a foreign use. As a result, DRC_X cannot make a domestic use election with respect to its year 1 dual consolidated loss pursuant to §1.1503(d)–6(d)(2), and such loss

will be subject to the domestic use limitation rule of § 1.1503(d)–4(b).

Example 12. No foreign use—absence of foreign loss usage ordering rules. (i) *Facts.* (A) P owns DRC_X, a member of the P consolidated group. DRC_X owns FS_X. Under the Country X consolidation regime, a consolidated group may elect in any given year to use all or a portion of the losses of one consolidated group member to offset income of other consolidated group members. If no such election is made in a year in which losses are generated by a consolidated member, such losses carry forward and are available, at the election of the consolidated group, to offset income of consolidated group members in subsequent taxable years. Country X law does not provide ordering rules for determining when a loss from a particular taxable year is used because, under Country X law, losses never expire. In addition, Country X law does not provide ordering rules for determining when a particular type of loss (for example, capital or ordinary) is used.

(B) In year 1, DRC_X incurs a capital loss of $80x which, under § 1.1503(d)–5(b)(2), is not a dual consolidated loss. DRC_X also incurs a net operating loss of $80x in year 1 which is a dual consolidated loss. FS_X generates $60x of capital gain in year 1 which, for Country X purposes, can be offset by capital losses and net operating losses. Under the laws of Country X, DRC_X elects to use $60x of its total year 1 loss of $160x to offset the $60x of capital gain generated by FS_X in year 1; the remaining $100x of year 1 loss carries forward. In both year 2 and year 3, DRC_X incurs a net operating loss of $100x, while FS_X incurs no income or loss in years 2 and 3. DRC_X's $100x losses incurred in year 2 and year 3 are dual consolidated losses. Because DRC_X does not elect under the laws of Country X to use all or a portion of its year 2 or year 3 net operating losses of $100x to offset the income of other members of the Country X consolidated group, P is permitted to make (and in fact does make) a domestic use election with respect to both the year 2 and year 3 dual consolidated losses of DRC_X. In year 4, DRC_X has a net operating loss of $10x and FS_X generates $125x of income. Country X law permits, upon an election, FS_X's $125x of income generated in year 4 to be offset by losses (including carryover losses from prior years) of other group members. Accordingly, in year 4, DRC_X elects to use $125x of its accumulated losses to offset the $125x of year 4 income generated by FS_X.

(ii) *Result.* (A) Under the ordering rules of § 1.1503(d)–3(d)(3), a pro rata amount of DRC_X's year 1 net operating loss ($30x) and capital loss ($30x) is considered to be used to offset FS_X's year 1 $60x capital gain. As a result, P cannot make a domestic use election with respect to DRC_X's year 1 $80x dual consolidated loss because a portion of such loss is put to a foreign use.

(B) DRC_X's $10x year 4 net operating loss is also a dual consolidated loss. Under the ordering rules of § 1.1503(d)–3(d)(1), such loss is considered to be used to offset $10x of FS_X's year 4 $125x of income. Consequently, P cannot make a domestic use election with respect to such loss. Under the ordering rules of § 1.1503(d)–3(d)(2), $50x of capital loss carryover and $50x of ordinary loss from year 1 will be considered to offset $100x of FS_X's year 4 income because the income is first deemed to have been offset by losses the use of which would not constitute a triggering event that would result in the recapture of a dual consolidated loss. The remaining $15x of FS_X's year 4 income is considered to be offset by losses from year 3 because it is the most recent taxable year from which a loss may be carried forward. Thus, a portion of the year 3 dual consolidated loss has been put to a foreign use and the entire year 3 dual consolidated loss is recaptured. However, none of DRC_X's $100x year 2 net operating loss will be deemed to offset FS_X's year 4 income. As a result, DRC_X's year 2 dual consolidated loss will not be recaptured.

Example 13. Exception to foreign use through partnership interest. (i) *Facts.* (A) P owns 80 percent of HPS_X, a Country X entity subject to Country X tax on its worldwide income. FS_Z, an unrelated foreign corporation, owns the remaining 20 percent of HPS_X. HPS_X is classified as a partnership for Federal tax purposes and carries on operations in Country X that, if carried on by a U.S. person, would constitute a foreign branch within the meaning of § 1.367(a)–6T(g)(1). P's interest in HPS_X and P's indirect interest in the Country X branch are individual separate units that are combined into a single separate unit (Country X separate unit) pursuant to § 1.1503(d)–1(b)(4)(ii).

(B) In year 1, HPS_X incurs a loss of $100x, $80x of which is attributable to P's Country X separate unit. The $80x of loss attributable to P's Country X separate unit constitutes a dual consolidated loss and P makes a domestic use election with respect to such loss. In year 2, HPS_X generates $50x of income, $40x of which is attributable to P's interest in the Country X separate unit. Under Country X income tax laws, the $100x of year 1 loss incurred by HPS_X is carried forward and offsets the $50x of income generated by HPS_X in year 2; the remaining $50x of loss is carried forward and is available to offset income generated by HPS_X in subsequent years. P and FS_Z maintain their ownership interests in HPS_X throughout years 1 and 2.

(ii) *Result.* In year 2, under the laws of Country X, the $100x of year 1 loss, which includes the $80x dual consolidated loss attributable to P's Country X separate unit, is made available to offset income of HPS_X. Such income is attributable to P's interest

in HPS_X, which is a separate unit. Such income also is income of FS_Z, a foreign corporation that is an owner of an interest in HPS_X, which is not a separate unit. However, pursuant to §1.1503(d)–3(c)(4), there is no foreign use of the year 1 dual consolidated loss in year 2. This is the case because P's interest in HPS_X as of the end of year 1 has not been reduced by more than a de minimis amount, and the portion of the $80x dual consolidated loss was made available for a foreign use in year 2 solely as a result of FS_Z's ownership in HPS_X and the allocation or carry forward of the dual consolidated loss as a result of such ownership.

(iii) *Alternative Facts.* The facts are the same as in paragraph (i) of this *Example 13*, except that P also owns FS_X. In addition, FS_X and HPS_X elect to file a consolidated return under Country X law. The exception to foreign use under §1.1503(d)–3(c)(4) does not apply because there is a foreign use other than by reason of the dual consolidated loss being made available as a result of FS_Z's ownership in HPS_X and the allocation or carry forward of the dual consolidated loss as a result of such ownership. That is, the exception does not apply because there is also a foreign use of the dual consolidated loss as a result of FS_X and HPS_X filing a consolidated return under Country X law.

(iv) *Alternative Facts.* The facts are the same as in paragraph (i) of this *Example 13*, except that at the end of year 2, FS_Z contributes cash to HPS_X in exchange for additional equity of HPS_X. As a result of the contribution, FS_Z's interest in HPS_X increases from 20 percent to 30 percent, and P's interest in HPS_X decreases from 80 percent to 70 percent. P's interest in HPS_X is reduced within a single 12-month period by 12.5 percent (10/80), as compared to P's interest in HPS_X as of the beginning of such 12-month period. Accordingly, pursuant to §1.1503(d)–3(c)(4)(iii), the exception to foreign use provided under §1.1503(d)–3(c)(4)(i) does not apply. Therefore, in year 2 there is a foreign use of the $80x year 1 dual consolidated loss attributable to P's Country X separate unit. Such foreign use constitutes a triggering event in year 2 and the $80x year 1 dual consolidated loss is recaptured. Alternatively, if FS_Z were a domestic corporation, there would not be a foreign use of the $80x year 1 dual consolidated loss because the loss would not be available to offset income that, under U.S. tax principles, is income of a foreign corporation or a direct or indirect owner of an interest in a hybrid entity that is not a separate unit.

Example 14. Exception to foreign use through partnership interest—combination rule. (i) *Facts.* (A) P and FS_X form PRS_X. P and FS_X each own 50 percent of PRS_X throughout years 1 and 2. PRS_X is treated as a partnership for both U.S. and Country X tax purposes. PRS_X owns DE_Y. DE_Y is a Country Y entity subject to Country Y tax on its worldwide income and disregarded as an entity separate from its owner for U.S. tax purposes. DE_Y conducts business operations in Country Y that, if carried on by a U.S. person, would constitute a foreign branch as defined in §1.367(a)–6T(g)(1). P's interest in the Country Y operations conducted by DE_Y is an individual foreign branch separate unit. P's interest in DE_Y, owned indirectly through PRS_X, is a hybrid entity individual separate unit. P also owns FB_Y, a Country Y foreign branch individual separate unit. Under §1.1503(d)–1(b)(4)(ii), FB_Y and P's indirect interests in DE_Y and DE_Y's Country Y business operations are treated as a combined separate unit (Country Y separate unit).

(B) In year 1, there is a $100x loss attributable to the Country Y business operations conducted by DE_Y. Thus, there is a $50x loss attributable to P's interest in DE_Y's Country Y business operations in year 1. Also in year 1, there is a $200x loss attributable to FB_Y. No income or loss is attributable to P's interest in DE_Y in year 1. Under §1.1503(d)–5(c)(4)(ii), the dual consolidated loss attributable to P's combined Country Y separate unit is $250x ($50x loss attributable to P's indirect interest in DE_Y's Country Y operations, plus $200x loss attributable to FB_Y). In year 2, neither DE_Y nor DE_Y's Country Y operations generates income or loss. Under Country Y law, the $100x of year 1 loss incurred by DE_Y is carried forward and is available to offset income of DE_Y in year 2.

(ii) *Result.* As a result of the carryover of the year 1 $100x loss (which includes $50x of the year 1 dual consolidated loss) under Country Y law, a portion of such loss will be available to offset income of DE_Y that is attributable to P's interest in DE_Y owned indirectly through PRS_X. A portion of such loss will also be available to offset income of DE_Y that is attributable to FS_X's indirect ownership of DE_Y. Accordingly, under §1.1503(d)–3(a), there would be a foreign use of a portion of P's $250x year 1 dual consolidated loss because it is available to offset an item of income of the owner of an interest in a hybrid entity, which is not a separate unit (there would also be a foreign use in this case because FS_X is a foreign corporation). However, there has not been a reduction of P's interest in DE_Y, DE_Y has not consolidated under the laws of Country Y, and there has not been any other foreign use of the dual consolidated losses. As a result, no foreign use occurs as a result of the carryforward pursuant to §1.1503(d)–3(c)(4)(i) and (ii).

Example 15. No foreign use—asset basis carryover exception. (i) *Facts.* P owns FB_X and FS_X. In year 1, there is a dual consolidated loss attributable to FB_X. P's items of income, gain, deduction, and loss that are taken into account in calculating FB_X's dual consolidated loss include depreciation deductions

attributable to FB_X's assets. P makes a domestic use election under §1.1503(d)–6(d) with respect to the year 1 dual consolidated loss of FB_X. At the end of year 2, P contributes a portion of FB_X's assets to FS_X, in exchange for stock in FS_X. The aggregate adjusted basis of the assets transferred by P to FS_X is less than 10 percent of the aggregate adjusted basis of all of FB_X's assets held at the beginning of year 2. In addition, no other assets of FB_X are transferred during the certification period. Under Country X law, FS_X's basis in the transferred assets is determined by reference to P's basis in such assets. In addition, under Country X law, a portion of the depreciation deductions that were taken into account in year 1 for U.S. tax purposes, are taken into account in year 2 for Country X tax purposes.

(ii) *Result*. As a result of the transfer of assets from P to FS_X, a portion of the year 1 dual consolidated loss is available for a foreign use. This is the case because a portion of the basis in FB_X's assets, which gave rise to depreciation deductions that were taken into account in computing the year 1 dual consolidated loss, will give rise to a depreciation deduction under Country X laws that will be available, under U.S. tax principles, to offset the income of FS_X, a foreign corporation, in year 2. However, the aggregate adjusted basis of all the assets transferred by P to FS_X, within the 12-month period ending at the end of year 2, is less than 10 percent of the aggregate adjusted basis of all of FB_X's assets at the beginning of such 12-month period. Moreover, the aggregate adjusted basis of the assets transferred by P to FS_X at any time during the certification period is less than 30 percent of the aggregate adjusted basis of FB_X's assets held at the end of year 1. In addition, the item of deduction giving rise to the foreign use is being made available solely as a result of the adjusted basis of the transferred assets being determined in whole, or in part, by reference to the adjusted basis of such transferred assets in the hands of FB_X. As a result, this transfer will not result in a foreign use pursuant to §1.1503(d)–3(c)(6).

Example 16. No foreign use—liability assumption exception. (i) *Facts*. P owns FB_X. In year 1, there is a dual consolidated loss attributable to FB_X for which P makes a domestic use election under §1.1503(d)–6(d). The dual consolidated loss includes a deduction for salary expense that was deductible for U.S. tax purposes at the end of year 1, even though it was not paid until year 2. The deduction was incurred in the ordinary course of FB_X's trade or business. During year 2, and before the accrued salary expense liability was paid, P sells all the assets of FB_X to FS_X in exchange for cash and FS_X's assumption of the liabilities of the FB_X trade or business, including the obligation to pay the accrued salary expense. Under Country X law, the accrued salary expense of FB_X is deductible, and is taken into account for purposes of computing the taxable income of FB_X, when paid. FB_X pays the accrued salary expense after the sale of FB_X to FS_X.

(ii) *Result*. (A) As a result of FS_X's assumption of the FB_X liabilities, including the accrued salary expense, a portion of the dual consolidated loss is available for a foreign use in year 2. This is the case because the deduction that was taken into account in year 1 in computing the dual consolidated loss under U.S. tax principles will, under Country X tax law, be taken into account and will be available to offset the income of FS_X, a foreign corporation, in year 2. However, because this item of expense is made available solely as a result of the assumption of a liability of FB_X, and such liability was incurred in the ordinary course of FB_X's trade or business, there will not be a foreign use of the year 1 dual consolidated loss pursuant to §1.1503(d)–3(c)(7).

(B) The transfer of all the assets of FB_X to FS_X is a triggering event under §1.1503(d)–6(e)(1)(iv), unless P can rebut the triggering event under §1.1503(d)–6(e)(2). For purposes of determining whether, under §1.1503(d)–6(e)(2)(ii), the transfer of assets resulted in a carryover under foreign law of FB_X's losses, expenses, or deductions, the exception to foreign use for the assumption of liabilities is taken into account. However, the other exceptions to foreign use do not apply for this purpose (or for purposes of demonstrating that no foreign use of a dual consolidated loss can occur in any other year under §1.1503(d)–6(c), (e)(2)(i) or (j)(2)). See §1.1503(d)–3(c)(1). Provided the other requirements of §1.1503(d)–6(e)(2)(ii) and (iii) are satisfied, P may be able to rebut the occurrence of a triggering event upon the transfer of FB_X's assets to FS_X.

Example 17. Mirror legislation rule—dual resident corporation and hybrid entity separate unit. (i) *Facts*. P owns DRC_X, a member of the P consolidated group. DRC_X owns FS_X. In year 1, DRC_X incurs a $100x net operating loss that is a dual consolidated loss. To prevent corporations like DRC_X from offsetting losses both against income of affiliates in Country X and against income of foreign affiliates under the tax laws of another country, Country X mirror legislation prevents a corporation that is subject to the income tax of another country on its worldwide income or on a residence basis from using the Country X form of consolidation. Accordingly, the Country X mirror legislation prevents the loss of DRC_X from being made available to offset income of FS_X.

(ii) *Result*. Under §1.1503(d)–3(e), because the losses of DRC_X are subject to Country X's mirror legislation, there is a deemed foreign use of DRC_X's year 1 dual consolidated loss. The stand-alone exception to the mirror rule in §1.1503(d)–3(e)(2) does not apply because,

absent the mirror legislation, DRC_X's year 1 dual consolidated loss would be available for a foreign use (as defined in §1.1503(d)–3), without regard to whether such availability is limited by election or similar procedure. That is, absent the mirror legislation, all or a portion of the dual consolidated loss would be available to offset the income of FS_X under the Country X consolidation regime. This is the case even if Country X did not recognize DRC_X as having a loss in year 1. Therefore, P may not make a domestic use election with respect to DRC_X's year 1 dual consolidated loss pursuant to §1.1503(d)–3(d)(2).

(iii) *Alternative Facts*. The facts are the same as in paragraph (i) of this *Example 17*, except that P owns $DE1_X$ (rather than DRC_X) and, in year 1, there is a $100 dual consolidated loss attributable to P's interest in $DE1_X$ (rather than of DRC_X). The Country X mirror legislation only applies to Country X dual resident corporations and, therefore, does not apply to losses attributable to P's interest in $DE1_X$. As a result, the mirror legislation rule under §1.1503(d)–3(e) would not deny the opportunity of such loss from being put to a foreign use (for example, by offsetting the income of FS_X through the Country X consolidation regime). Therefore, a domestic use election can be made with respect to the dual consolidated loss (provided the conditions for such an election are otherwise satisfied).

Example 18. Mirror legislation rule—standalone foreign branch separate unit. (i) *Facts*. P owns FB_X. In year 1, there is a $100x dual consolidated loss attributable to FB_X. Country X enacted mirror legislation to prevent Country X branches and permanent establishments of nonresident corporations from offsetting losses both against income of Country X affiliates and against other income of its owner (or foreign affiliates thereof) under the tax laws of another country. The Country X mirror legislation prevents a Country X branch or permanent establishment of a nonresident corporation from offsetting its losses against the income of Country X affiliates if such losses may be deductible against income (other than income of the Country X branch or permanent establishment) under the laws of another country.

(ii) *Result*. In general, under §1.1503(d)–3(e), because the losses of FB_X are subject to Country X's mirror legislation, there is a deemed foreign use of FB_X's year 1 dual consolidated loss. However, in the absence of the Country X mirror legislation, no item of deduction or loss composing FB_X's year 1 dual consolidated loss would be available in the year incurred for a foreign use (as defined in §1.1503(d)–3), without regard to whether such availability is limited by election or otherwise. This is the case because there is no Country X entity through which the dual consolidated loss could be put to a foreign use (absent a sale, merger, or similar transaction involving FB_X). As a result, the standalone exception in §1.1503(d)–3(e)(2) may apply, provided P complies with the requirements of §1.1503(d)–3(e)(2)(ii). Accordingly, P may make a domestic use election with respect to the year 1 dual consolidated loss of FB_X pursuant to §1.1503(d)–6(d). If, however, any item of the dual consolidated loss would otherwise be available for a foreign use during the certification period (for example, as a result of P acquiring a foreign corporation that is organized under the laws of Country X such that losses of FB_X could be put to a foreign use through consolidation or similar means), then such loss would be recaptured pursuant to §1.1503(d)–6(e)(1)(ix).

(iii) *Alternative Facts*. The facts are the same as in paragraph (i) of this *Example 18*, except that the Country X mirror legislation operates in a manner similar to the rules under section 1503(d). That is, it allows the taxpayer to elect to use the loss to either offset income of an affiliate in Country X, or income of an affiliate (or other income of the owner of the Country X branch or permanent establishment) in the other country, but not both. Because the Country X mirror legislation permits the taxpayer to choose to put the dual consolidated loss to a foreign use, it does not deny the opportunity to put the loss to a foreign use. Therefore, there is no deemed foreign use of the dual consolidated loss pursuant to §1.1503(d)–4(e) and a domestic use election can be made for such loss.

Example 19. Application of mirror legislation rule to combined separate unit. (i) *Facts*. P owns FB_X, FS_X, and $DE1_X$. In year 1, there is a $50x dual consolidated loss attributable to FB_X and $10x of income attributable to P's interest in $DE1_X$. FS_X has income of $100x. Pursuant to §1.1503(d)–1(b)(4)(ii), FB_X and P's interest in $DE1_X$ are combined and treated as a single separate unit (Country X separate unit) which has a year 1 dual consolidated loss of $40x. Country X enacted mirror legislation to prevent Country X branches or permanent establishments of nonresident corporations from offsetting losses both against income of Country X affiliates and against other income of its owner (or foreign affiliates thereof) under the tax laws of another country. The Country X mirror legislation prevents a Country X branch or permanent establishment of a nonresident corporation from offsetting its losses against the income of Country X affiliates if such losses may be deductible against income (other than income of the Country X branch or permanent establishment) under the laws of another country. However, the United States and Country X have entered into an agreement described in §1.1503(d)–6(b) pursuant to the U.S.-Country X income tax convention (mirror agreement). The mirror agreement applies to Country X foreign branch separate units of domestic corporations, but not to

Country X hybrid entity separate units. The mirror agreement provides that neither the Country X mirror legislation nor the mirror legislation rule under §1.1503(d)–3(e) will apply to losses attributable to Country X foreign branch separate units, provided certain conditions and reporting requirements are satisfied (including a domestic use election, if the loss is to be used to offset income of a domestic affiliate). Thus, losses attributable to Country X foreign branch separate units can, subject to the requirements of the mirror agreement, be used to offset income of a domestic affiliate or a Country X affiliate (but not both).

(ii) *Result*. The Country X mirror legislation only applies to Country X foreign branch separate units and does not apply to hybrid entity separate units. In addition, if P complies with the terms and conditions of the mirror agreement, the Country X mirror legislation would not apply to FB_X. As a result, the income tax laws of Country X would not deny the opportunity of a loss of either individual separate unit that composes P's combined Country X separate unit from being put to a foreign use. Therefore, notwithstanding §1.1503(d)–3(e), a domestic use election can be made with respect to the dual consolidated loss attributable to P's Country X separate unit, provided the terms and conditions of the mirror agreement are satisfied. See §1.1503(d)–6(b)(2).

(iii) *Alternative Facts*. The facts are the same as in paragraph (i) of this *Example 19*, except that the Country X mirror legislation also applies to losses attributable to $DE1_X$, but the mirror agreement does not apply to such losses. The mirror legislation rule would apply with respect to P's interest in $DE1_X$ and, as a result, there is a deemed foreign use of the dual consolidated loss attributable to the Country X separate unit and a domestic use election cannot be made for such loss. This is the case even though, pursuant to §1.1503(d)–5(c)(4)(ii)(A), P's interest in $DE1_X$ (which is subject to the Country X mirror legislation) does not, as an individual separate unit, have a dual consolidated loss in year 1. Further, the stand-alone exception to the mirror legislation rule in §1.1503(d)–3(e)(2) does not apply because, absent the mirror legislation, the Country X combined separate unit's dual consolidated loss would be available in the year incurred for a foreign use (as defined in §1.1503(d)–3) because it could be used to offset income of FS_X under the Country X consolidation regime. This is the case even if Country X requires an election to consolidate and no such election is made. The result would be the same even if Country X did not recognize $DE1_X$ as having a loss.

Example 20. Dual consolidated loss limitation after section 381 transaction. disposition of assets and subsequent liquidation of dual resident corporation. (i) *Facts*. P owns DRC_X, a member of the P consolidated group. In year 1, DRC_X incurs a dual consolidated loss and P does not make a domestic use election with respect to such loss. Under §1.1503(d)–4(b), DRC_X's year 1 dual consolidated loss is subject to the limitations under §1.1503(d)–4(c) and, therefore, may not be used to offset the income of P or S (or any other domestic affiliate) on the group's U.S. income tax return. At the beginning of year 2, DRC_X sells all of its assets for cash and distributes the cash to P pursuant to a liquidation that qualifies under section 332.

(ii) *Result*. In general, under section 381, P would succeed to, and be permitted to use, DRC_X's net operating loss carryover. However, §1.1503(d)–4(d)(1)(i) prohibits the dual consolidated loss of DRC_X from carrying over to P. Therefore, DRC_X's year 1 net operating loss carryover is eliminated.

Example 21. Dual consolidated loss limitation applied to a separate unit transferred in a section 381 transaction. (i) *Facts*. S owns $DE1_X$ which, in turn, owns FB_X. S's interest in $DE1_X$ and its indirect interest in FB_X are combined and treated as a single separate unit (Country X separate unit) pursuant to §1.1503(d)–1(b)(4)(ii). In year 1, a dual consolidated loss is attributable to the Country X separate unit, and P does not make a domestic use election with respect to such loss. Under §1.1503(d)–4(b), the year 1 dual consolidated loss attributable to the Country X separate unit may not be used to offset the income of P or S (other than income attributable to the Country X separate unit, subject to the application of §1.1503(d)–4(c)) on the group's consolidated U.S. income tax return (nor may it be used to offset the income of any other domestic affiliates). At the beginning of year 2, S transfers its entire interest in $DE1_X$, and thus its entire indirect interest in FB_X, to FS_X in a transaction described in section 381.

(ii) *Result*. Section 1.1503(d)–4(d)(1)(ii) provides that the dual consolidated loss attributable to a separate unit that is subject to the domestic use limitation under §1.1503(d)–4(b) is eliminated if the separate unit ceases to be a separate unit of its affiliated domestic owner and all other members of the affiliated domestic owner's separate group. As a result of the transfer of the Country X separate unit to FS_X, the Country X separate unit ceases to be a separate unit of S, and is not a separate unit of any other member of the P consolidated group. In addition, the exceptions in §1.1503(d)–4(d)(2)(iii) do not apply because FS_X is not a domestic corporation. Thus, the year 1 dual consolidated loss attributable to the Country X separate unit is eliminated.

(iii) *Alternative Facts*. Assume the same facts as in paragraph (i) of this *Example 21*, except S transfers its assets to DC, a domestic corporation that is not a member of the

P consolidated group, in a transaction described in section 381(a). Immediately after the transaction, the Country X separate unit is a separate unit of DC. Under §1.1503(d)–4(d)(1)(ii), the year 1 dual consolidated loss of the Country X separate unit would be eliminated because it ceases to be a separate unit of S, and is not a separate unit of any other member of the P consolidated group. However, because the transferee is a domestic corporation and the Country X separate unit is a separate unit in the hands of DC immediately after the transaction, the exception under §1.1503(d)–4(d)(2)(iii)(A) applies. As a result, the year 1 dual consolidated loss of the Country X separate unit is not eliminated and any income generated by DC that is attributable to the Country X separate unit following the transfer may be offset by the carryover dual consolidated losses attributable to the Country X separate unit, subject to the limitations of §1.1503(d)–4(b) and (c) applied as if DC generated the dual consolidated loss and such loss was attributable to the Country X separate unit.

(iv) *Alternative Facts.* Assume the same facts as in paragraph (iii) of this *Example 21*, except that P owns $DE2_X$ and the interest in $DE2_X$ is combined with and therefore included in the Country X separate unit. In addition, a portion of the dual consolidated loss of the Country X separate unit is attributable to P's interest in $DE2_X$. Pursuant to §1.1503(d)–4(d)(2)(iii)(A), the result would be the same as in paragraph (iii) of this *Example 21*, with respect to the portion of the dual consolidated loss attributable to the combined separate unit that is succeeded to and taken into account by DC pursuant to section 381. The portion of the dual consolidated loss attributable to P's interest in $DE2_X$, however, does not carry over to DC but is retained by P and continues to be subject to the limitations of §1.1503(d)–4(b) and (c) with respect to P's interest in $DE2_X$.

(v) *Alternative Facts.* Assume the same facts as in paragraph (iv) of this *Example 21*, except that DC is a member of the P consolidated group. Pursuant to §1.1503(d)–4(d)(2)(iii)(B), the dual consolidated loss of the Country X separate unit is not eliminated and income attributable to the Country X separate unit may continue to be offset by the dual consolidated loss that is succeeded to and taken into account by DC pursuant to section 381, subject to the limitations of §1.1503(d)–4(b) and (c). The result would be the same even if the interest in $DE1_X$ ceased to be a separate unit in the hands of DC (for example, because it dissolved under Country X law in connection with the transaction), provided P, or another member of the P consolidated group, continued to own a portion of the Country X separate unit.

Example 22. Tainted income. (i) *Facts.* P owns 100 percent of DRC_Z, a domestic corporation that is included as a member of the P consolidated group. DRC_Z conducts a business in the United States. During year 1, DRC_Z was managed and controlled in Country Z and therefore was subject to tax as a resident of Country Z and was a dual resident corporation. In year 1, DRC_Z incurred a dual consolidated loss of $200x, and P did not make a domestic use election with respect to such loss. As a result, such loss is subject to the domestic use limitation rule of §1.1503(d)–4(b). At the end of year 1, DRC_Z moved its management and control to the United States and, as a result, ceased being a dual resident corporation. At the beginning of year 2, P transferred asset A, a non-depreciable asset, to DRC_Z in exchange for common stock in a transaction that qualified for nonrecognition under section 351. At the time of the transfer, P's tax basis in asset A equaled $50x and the fair market value of asset A equaled $100x. The tax basis of asset A in the hands of DRC_Z immediately after the transfer equaled $50x pursuant to section 362. Asset A did not constitute replacement property acquired in the ordinary course of business. DRC_Z did not generate income or gain during years 2, 3, or 4. On June 30, year 5, DRC_Z sold asset A to a third party for $100x, its fair market value at the time of the sale, and recognized $50x of income on such sale. In addition to the $50x income generated on the sale of asset A, DRC_Z generated $100x of operating income in year 5. At the end of year 5, the fair market value of all the assets of DRC_Z was $400x.

(ii) *Result.* DRC_Z ceased being a dual resident corporation at the end of year 1. Therefore, its year 1 dual consolidated loss cannot be offset by tainted income. Asset A is a tainted asset because it was acquired in a nonrecognition transaction after DRC_Z ceased being a dual resident corporation (and was not replacement property acquired in the ordinary course of business). As a result, the $50x of income recognized by DRC_Z on the disposition of asset A is tainted income and cannot be offset by the year 1 dual consolidated loss of DRC_Z. In addition, absent evidence establishing the actual amount of tainted income, $25x of the $100x year 5 operating income of DRC_Z (($100x/$400x) × $100x) also is treated as tainted income and cannot be offset by the year 1 dual consolidated loss of DRC_Z under §1.1503(d)–4(e)(2)(ii). Therefore, $75x of the $150x year 5 income of DRC_Z constitutes tainted income and may not be offset by the year 1 dual consolidated loss of DRC_Z; however, the remaining $75x of year 5 income of DRC_Z may be offset by such dual consolidated loss. The result would be the same if, instead of P transferring asset A to DRC_Z, such asset was received from a separate unit or a transparent entity of DRC_Z.

Example 23. Treatment of disregarded item and books and records of a hybrid entity. (i) *Facts.* P owns $DE1_X$ which, in turn, owns FS_X. In year 1, P borrows from a third party and

on-lends the proceeds to $DE1_X$. In year 1, P incurs interest expense attributable to the third-party loan. Also in year 1, $DE1_X$ incurs interest expense attributable to its loan from P, but such expense is generally disregarded for U.S. tax purposes because $DE1_X$ is disregarded as an entity separate from P. The third-party loan and related interest expense are reflected on the books and records of P (and not on the books and records of $DE1_X$). The loan from P to $DE1_X$ and related interest expense are reflected on the books and records of $DE1_X$. There are no other items of income, gain, deduction, or loss reflected on the books and records of $DE1_X$ in year 1.

(ii) *Result*. Because the interest expense on P's third-party loan is not reflected on the books and records of $DE1_X$, no portion of such expense is attributable to P's interest in $DE1_X$ pursuant to §1.1503(d)–5(c)(3) for purposes of calculating the year 1 dual consolidated loss, if any, attributable to such interest. In addition, even though P's interest in $DE1_X$ is treated as a separate domestic corporation for purposes of determining the amount of income or dual consolidated loss attributable to it pursuant to §1.1503(d)–5(c)(1)(ii), such treatment does not cause the interest expense incurred on the loan from P to $DE1_X$ that is generally disregarded for U.S. tax purposes to be regarded for purposes of calculating the year 1 dual consolidated loss, if any, attributable to P's interest in $DE1_X$. As a result, even though the disregarded interest expense is reflected on the books and records of $DE1_X$, it is not taken into account for purposes of calculating income or a dual consolidated loss. Therefore, there is no dual consolidated loss attributable to P's interest in $DE1_X$ in year 1.

Example 24. Dividend income attributable to a separate unit. (i) *Facts*. P owns $DE1_X$ which, in turn, owns FB_X. P's interest in $DE1_X$ and its indirect interest in FB_X are combined and treated as a single separate unit (Country X separate unit) pursuant to §1.1503(d)–1(b)(4)(ii). $DE1_X$ owns $DE3_Y$. $DE3_Y$ owns the stock of FS_X. P's Country X separate unit would, without regard to year 1 dividend income (or related section 78 gross-up) received from FS_X, have a dual consolidated loss of $75x in year 1. In year 1, FS_X distributes $50x to $DE3_Y$ that is taxable as a dividend. $DE3_Y$ distributes the same amount to $DE1_X$. P computes foreign taxes deemed paid on the dividend under section 902 of $25x and includes that amount in gross income under section 78.

(ii) *Result*. The $50x dividend is reflected on the books and records of $DE3_Y$ and, therefore, is attributable to P's interest in $DE3_Y$ pursuant to §1.1503(d)–5(c)(3)(i). In addition, the $25x section 78 gross-up is attributable to P's interest in $DE3_Y$ pursuant to §1.1503(d)–5(c)(4)(iv). The distribution of $50x from $DE3_Y$ to $DE1_X$ is generally disregarded for U.S. tax purposes and, therefore, does not give rise to an item that is taken into account for purposes of calculating income or a dual consolidated loss. This is the case even though the item would be reflected on the books and records of $DE1_X$. In addition, pursuant to §1.1503(d)–5(c)(1)(iii), each separate unit must calculate its own income or dual consolidated loss, and each item of income, gain, deduction, and loss must be taken into account only once. As a result, the dual consolidated loss of $75x attributable to P's Country X separate unit in year 1 is not reduced by the amount of dividend income attributable to P's indirect interest in $DE3_Y$.

Example 25. Items reflected on books and records of a combined separate unit. (i) *Facts*. P owns $DE1_X$ which, in turn, owns FB_X. P's interest in $DE1_X$ and its indirect interest in FB_X are combined and treated as a single separate unit (Country X separate unit) pursuant to §1.1503(d)–1(b)(4)(ii). The following items are reflected on the books and records of $DE1_X$ in year 1: Sales, depreciation expense, a political contribution, royalty expense paid to P, repairs and maintenance expense paid to a third party, and Country X income tax expense. The amount of sales under U.S. tax principles equals the amount of sales reported for accounting purposes. The depreciation expense is calculated on a straight-line basis over the useful life of the asset for accounting purposes, but is subject to accelerated depreciation for U.S. tax purposes. In addition, the repairs and maintenance expense, which is deducted when paid for accounting purposes, is properly capitalized and amortized over five years for U.S. tax purposes. Finally, P elects to claim as a credit under section 901 the Country X income tax expense that was paid in year 1.

(ii) *Result*. (A) For purposes of determining the income or dual consolidated loss attributable to P's Country X separate unit, items of income, gain, deduction, and loss must first be attributed to the individual separate units (that is, P's interest in $DE1_X$ and its indirect interest in FB_X). For purposes of attributing items to P's interest in $DE1_X$, P's items that are reflected on $DE1_X$'s books and records, as adjusted to conform to U.S. tax principles, are taken into account. See §1.1503(d)–5(c)(3)(i). For purposes of attributing items (other than interest expense) to FB_X, the principles of section 864(c)(2), (c)(4), and (c)(5) (as set forth in §1.864–4(c) and §§1.864–5 through 1.864–7) must be applied and, for interest expense, the principles of §1.882–5, as modified under §1.1503(d)–5(c)(2)(ii), must be applied; however, for these purposes, pursuant to §1.1503(d)–5(c)(4)(i)(A), FB_X only takes into account items attributable to P's interest in $DE1_X$ and the assets, liabilities, and activities of such interest. In addition, to the extent such items are taken into account by FB_X, they are not taken into account in determining

the items attributable to P's interest in $DE1_X$. §1.1503(d)–5(c)(4)(i)(B). Because P's interest in $DE1_X$ has no assets or liabilities, and conducts no activities, other than through its ownership of FB_X, all of the items that are reflected on the books and records of $DE1_X$, as adjusted to conform to U.S. tax principles, are attributable to FB_X; no items are attributable to P's interest in $DE1_X$.

(B) The items reflected on the books and records of $DE1_X$ must be adjusted to conform to U.S. tax principles. No adjustment is required to sales because the amount of sales under U.S. tax principles equals the amount of sales for accounting purposes. The amount of straight-line depreciation expense reflected on $DE1_X$'s books and records must be adjusted to reflect the amount of depreciation on the asset that is allowable for U.S. tax purposes. The political contribution is not taken into account because it is not deductible for U.S. tax purposes. Similarly, because the royalty expense is paid to P, and therefore is generally disregarded for U.S. tax purposes, it is not taken into account. The repair and maintenance expense that is deducted in year 1 for accounting purposes also must be adjusted to conform to U.S. tax principles. Thus, the repair and maintenance expense will be taken into account in computing the income or dual consolidated loss attributable to P's Country X separate unit over five years (even though no item related to such expense would be reflected on the books and records of $DE1_X$ for years 2 through 5). Finally, because P elected to claim as a credit the Country X foreign taxes paid during year 1, no deduction is allowed for such amount pursuant to section 275(a)(4) and, therefore, the Country X tax expense is not taken into account.

(C) Pursuant to §1.1503(d)–5(c)(4)(ii)(B), the combined Country X separate unit of P calculates its income or dual consolidated loss by taking into account all the items of income, gain, deduction, and loss that were separately attributable to P's interest in $DE1_X$ and FB_X. However, in this case, there are no items attributable to P's interest in $DE1_X$. Therefore, the items attributable to the Country X separate unit are the items attributable to FB_X.

Example 26. Items attributable to a combined separate unit. (i) *Facts.* P owns $DE1_X$. $DE1_X$ owns a 50 percent interest in PRS_Z, a Country Z entity that is classified as a partnership both for Country Z tax purposes and for U.S. tax purposes. FS_X, which is unrelated to P, owns the remaining 50 percent interest in PRS_Z. PRS_Z carries on operations in Country X that, if carried on by a U.S. person, would constitute a foreign branch as defined in §1.367(a)-6T(g)(1). Therefore, P's share of the Country X operations carried on by PRS_Z constitutes a foreign branch separate unit. PRS_Z also owns assets that do not constitute a part of its Country X branch, including all of the interests in TE_T, a disregarded entity. TE_T is an entity incorporated under the laws of Country T, a country that does not have an income tax. Under the laws of Country X, an interest holder of TE_T does not take into account on a current basis the interest holder's share of items of income, gain, deduction, and loss of TE_T.

(ii) *Result.* (A) Pursuant to §1.1503(d)–1(b)(4)(ii), P's interest in $DE1_X$, and P's indirect ownership of a portion of the Country X operations carried on by PRS_Z, are combined and treated as a single separate unit (Country X separate unit). Pursuant to §1.1503(d)–5(c)(4)(ii)(A), for purposes of determining P's items of income, gain, deduction, and loss attributable to the Country X separate unit, the items of P are first attributed to each separate unit that composes the Country X separate unit.

(B) Pursuant to §1.1503(d)–5(c)(2)(i), the principles of section 864(c)(2), (c)(4), and (c)(5) (as set forth in §1.864–4(c) and §§1.864–5 through 1.864–7), apply for purposes of determining P's items of income, gain, deduction (other than interest expense), and loss that are attributable to P's indirect interest in the Country X operations carried on by PRS_Z. For purposes of determining P's interest expense that is attributable to P's indirect interest in the Country X operations carried on by PRS_Z, the principles of §1.882–5, as modified under §1.1503(d)–5(c)(2)(ii), shall apply. For purposes of applying these rules, P is treated as a foreign corporation, the Country X operations carried on by PRS_Z are treated as a trade or business within the United States, and the assets of P (including its share of the PRS_Z assets, other than those of the Country X operations) are treated as assets that are not U.S. assets. In addition, because P carries on its share of the Country X operations through $DE1_X$, a hybrid entity, §1.1503(d)–5(c)(4)(i)(A) provides that only the items attributable to P's interest in $DE1_X$, and only the assets, liabilities, and activities of P's interest in $DE1_X$, are taken into account for purposes of this determination.

(C) TE_T is a transparent entity as defined in §1.1503(d)–1(b)(16) because it is not taxable as an association for Federal tax purposes, is not subject to income tax in a foreign country as a corporation (or otherwise at the entity level) either on its worldwide income or on a residence basis, and is not treated as a pass-through entity under the laws of Country X (the applicable foreign country). TE_T is not a pass-through entity under the laws of Country X because a Country X holder of an interest in TE_T does not take into account on a current basis the interest holder's share of items of income, gain, deduction, and loss of TE_T. For purposes of determining P's items of income, gain, deduction, and loss that are attributable to P's interest in TE_T,

only those items of P that are reflected on the books and records of TE_T, as adjusted to conform to U.S. tax principles, are taken into account. §1.1503(d)–5(c)(3)(i). Because the interest in TE_T is not a separate unit, a loss attributable to such interest is not a dual consolidated loss and is not subject to section 1503(d) and these regulations. Items must nevertheless be attributed to the interests in TE_T. For example, such attribution is required for purposes of calculating the income or dual consolidated loss attributable to the Country X separate unit, and for purposes of applying the domestic use limitation under §1.1503(d)–4(b) to a dual consolidated loss attributable to the Country X separate unit.

(D) For purposes of determining P's items of income, gain, deduction, and loss that are attributable to P's interest in $DE1_X$, only those items of P that are reflected on the books and records of $DE1_X$, as adjusted to conform to U.S. tax principles, are taken into account. §1.1503(d)–5(c)(3)(i). For this purpose, $DE1_X$'s distributive share of the items of income, gain, deduction, and loss that are reflected on the books and records of PRS_Z, as adjusted to conform to U.S. tax principles, are treated as being reflected on the books and records of $DE1_X$, except to the extent such items are taken into account by the Country X operations of PRS_Z. See §1.1503(d)–5(c)(3)(ii) and (4)(i)(B). Because TE_T is a transparent entity, the items reflected on its books and records are not treated as being reflected on the books and records of $DE1_X$.

(E) Pursuant to §1.1503(d)–5(c)(4)(ii)(B), the combined Country X separate unit of P calculates its income or dual consolidated loss by taking into account all the items of income, gain, deduction, and loss that were separately attributable to P's interest in $DE1_X$ and the Country X operations of PRS_Z owned indirectly by P.

Example 27. Sale of separate unit by another separate unit. (i) *Facts.* P owns $DE3_Y$ which, in turn, owns $DE1_X$. $DE3_Y$ also owns other assets that do not constitute a foreign branch separate unit. $DE1_X$ owns FB_X. Pursuant to §1.1503(d)–1(b)(4)(ii), P's indirect interests in $DE1_X$ and FB_X are combined and treated as one Country X separate unit (Country X separate unit). $DE3_Y$ sells its interest in $DE1_X$ at the end of year 1 to an unrelated foreign person for cash. The sale results in an ordinary loss of $30x. Items of income, gain, deduction, and loss derived from the assets that gave rise to the $30x loss would be attributable to the Country X separate unit under §1.1503(d)–5(c) through (e). Without regard to the sale of $DE1_X$, no items of income, gain, deduction, and loss are attributable to P's Country X separate unit in year 1.

(ii) *Result.* Pursuant to §1.1503(d)–5(c)(4)(iii)(A), the $30x ordinary loss recognized on the sale is attributable to the Country X separate unit, and not P's interest in $DE3_Y$. This is the case because the Country X separate unit is treated as owning the assets that gave rise to the loss under §1.1503(d)–5(f). Thus, the loss attributable to the sale creates a year 1 dual consolidated loss attributable to the Country X separate unit. In addition, pursuant to §1.1503(d)–6(d)(2), P cannot make a domestic use election with respect to the dual consolidated loss because the sale of the interest in $DE1_X$ is a triggering event described in §1.1503(d)–6(e)(1)(iv) and (v). Further, although the year 1 dual consolidated loss would otherwise be subject to the domestic use limitation rule of §1.1503(d)–4(b), it is eliminated pursuant to §1.1503(d)–4(d)(1)(ii). Finally, if there were a dual consolidated loss attributable to P's interest in $DE3_Y$, the sale of the interest in $DE1_X$ would not be taken into account for purposes of determining whether there is an asset triggering event with respect to such dual consolidated loss under §1.1503(d)–6(e)(1)(iv).

Example 28. Gain on sale of tiered separate units. (i) *Facts.* P owns 75 percent of HPS_X, a Country X entity subject to Country X tax on its worldwide income. FS_X owns the remaining 25 percent of HPS_X. HPS_X is classified as a partnership for Federal tax purposes. HPS_X carries on operations in Country Y that, if carried on by a U.S. person, would constitute a foreign branch within the meaning of §1.367(a)–6T(g)(1). HPS_X also owns assets that do not constitute a part of its Country Y operations and would not themselves constitute a foreign branch within the meaning of §1.367(a)–6T(g)(1) if owned by a U.S. person. Neither HPS_X nor the Country Y operations has liabilities. P's indirect interest in the Country Y operations carried on by HPS_X, and P's interest in HPS_X, are each separate units. P sells its interest in HPS_X and recognizes a gain of $150x on such sale. Immediately prior to P's sale of its interest in HPS_X, P's portion of the assets of the Country Y operations (that is, assets the income, gain, deduction and loss from which would be attributable to P's Country Y foreign branch separate unit) had a built-in gain of $200x, and P's portion of HPS_X's other assets (that is, assets the income, gain, deduction and loss from which would be attributable to P's interest in HPS_X) had a built-in gain of $100x.

(ii) *Result.* Pursuant to §1.1503(d)–5(c)(4)(iii)(B), $100x of the total $150x of gain recognized ($200x/$300x × $150x) is attributable to P's indirect interest in its share of the Country Y operations carried on by HPS_X. Similarly, $50x of such gain ($100x/$300x × $150x) is attributable to P's interest in HPS_X.

Example 29. Effect on domestic affiliate. (i) *Facts.* (A) P owns $DE1_X$ which, in turn, owns FB_X. P's interest in $DE1_X$ and its indirect interest in FB_X are combined and treated as a

single separate unit (Country X separate unit) pursuant to §1.1503(d)–1(b)(4)(ii). In years 1 and 2, the items of income, gain, deduction, and loss that are attributable to P's Country X separate unit pursuant to §1.1503(d)–5 are as follows:

Item	Year 1	Year 2
Sales income	$100x	$160x
Salary expense	($75x)	($75x)
Research and experimental expense	($50x)	($50x)
Interest expense	($25x)	($25x)
Income/(dual consolidated loss)	($50x)	$10x

(B) P does not make a domestic use election with respect to the year 1 dual consolidated loss attributable to its Country X separate unit. Pursuant to §1.1503(d)–4(b) and (c)(2), the year 1 dual consolidated loss of $50x is treated as a loss incurred by a separate domestic corporation and is subject to the limitations under §1.1503(d)–4(c)(3). The P consolidated group has $100x of consolidated taxable income in year 2.

(ii) *Result*. (A) P must compute its taxable income for year 1 without taking into account the $50x dual consolidated loss, pursuant to §1.1503(d)–4(c)(2). Such amount consists of a pro rata portion of the expenses that were taken into account in calculating the year 1 dual consolidated loss. Thus, the items of the dual consolidated loss that are not taken into account by P in computing its taxable income are as follows: $25x of salary expense ($75x/$150x × $50x); $16.67x of research and experimental expense ($50x/$150x × $50x); and $8.33x of interest expense ($25x/$150x × $50x). The remaining amounts of each of these items, together with the $100x of sales income, are taken into account by P in computing its taxable income for year 1 as follows: $50x of salary expense ($75x − $25x); $33.33x of research and experimental expense ($50x − $16.67x); and $16.67x of interest expense ($25x − $8.33x).

(B) Subject to the limitations provided under §1.1503(d)–4(c), the year 1 $50x dual consolidated loss is carried forward and is available to offset the $10x of income attributable to the Country X separate unit in year 2. Pursuant to §1.1503(d)–4(c)(4), a pro rata portion of each item of deduction or loss included in such dual consolidated loss is considered to be used to offset the $10x of income, as follows: $5x of salary expense ($25x / $50x × $10x); $3.33x of research and experimental expense ($16.67x/$50x × $10x); and $1.67x of interest expense ($8.33x / $50x × $10x). The remaining amount of each item shall continue to be subject to the limitations under §1.1503(d)–4(c).

Example 30. Exception to domestic use limitation—no possibility of foreign use because items are not deducted or capitalized under foreign law. (i) *Facts*. P owns $DE1_X$ which, in turn, owns FS_X. In year 1, the sole item of income, gain, deduction, and loss attributable to P's interest in $DE1_X$, as provided under §1.1503(d)–5, is $100x of interest expense paid on a loan to an unrelated lender. For Country X tax purposes, the $100x interest expense attributable to P's interest in $DE1_X$ in year 1 is treated as a repayment of principal and therefore cannot be deducted (at any time) or capitalized.

(ii) *Result*. The $100x of interest expense attributable to P's interest in $DE1_X$ constitutes a dual consolidated loss. However, because the sole item constituting the dual consolidated loss cannot be deducted or capitalized (at any time) for Country X tax purposes, P can demonstrate that there can be no foreign use of the dual consolidated loss at any time. As a result, pursuant to §1.1503(d)–6(c)(1), if P prepares a statement described in §1.1503(d)–6(c)(2) and attaches it to its timely filed tax return, the year 1 dual consolidated loss attributable to P's interest in $DE1_X$ will not be subject to the domestic use limitation rule of §1.1503(d)–4(b).

Example 31. No exception to domestic use limitation—inability to demonstrate no possibility of foreign use. (i) *Facts*. P owns $DE1_X$ which, in turn, owns FB_X. P's interest in $DE1_X$ and its indirect interest in FB_X are combined and treated as a single separate unit (Country X separate unit) pursuant to §1.1503(d)–1(b)(4)(ii). In year 1, the sole items of income, gain, deduction, and loss attributable to P's Country X separate unit, as provided under §1.1503(d)–5, are $75x of sales income and $100x of depreciation expense. For Country X tax purposes, $DE1_X$ also generates $75x of sales income in year 1, but the $100x of depreciation expense is not deductible until year 2.

(ii) *Result*. The year 1 $25x net loss attributable to P's interest in the Country X separate unit constitutes a dual consolidated loss. In addition, even though $DE1_X$ has positive income in year 1 for Country X tax purposes, P cannot demonstrate that there is no possibility of foreign use with respect to the Country X separate unit's dual consolidated loss as provided under §1.1503(d)–6(c)(1)(i). P cannot make such a demonstration because the depreciation expense, an item composing the year 1 dual consolidated loss, is deductible (in a later year) for Country X tax purposes and, therefore, may be available to offset or reduce income for Country X purposes that would constitute a foreign use. For example, if $DE1_X$ elected to be classified as a corporation pursuant to §301.7701–3(c) of this chapter effective as of the end of year 1, and the deferred depreciation expense were available for Country X tax purposes to offset year 2 income of $DE1_X$, an entity treated as a foreign corporation in year 2 for U.S. tax purposes, there would be a foreign use.

(iii) *Alternative Facts*. (A) The facts are the same as in paragraph (i) of this *Example 31*, except as follows. In year 1, the sole items of

income, gain, deduction, and loss attributable to P's Country X separate unit, as provided in §1.1503(d)–5, are $75x of sales income, $100x of interest expense, and $25x of depreciation expense. For Country X tax purposes, $DE1_X$ generates $75x of sales income in year 1; the $100x interest expense is treated as a repayment of principal and therefore cannot be deducted or capitalized (at any time); and the $25x of depreciation expense is not deductible in year 1, but is deductible in year 2.

(B) In year 1, the $50x net loss attributable to P's Country X separate unit constitutes a dual consolidated loss. Even though the $100x interest expense, a nondeductible and noncapital item for Country X tax purposes, exceeds the $50x year 1 dual consolidated loss attributable to P's Country X separate unit, P cannot demonstrate that there is no possibility of foreign use of the dual consolidated loss as provided under §1.1503(d)–6(c)(1)(i). P cannot make such a demonstration because the $25x depreciation expense, an item of deduction or loss composing the year 1 dual consolidated loss, is deductible under Country X law (in year 2) and, therefore, may be available to offset or reduce income for Country X tax purposes that would constitute a foreign use.

Example 32. Triggering event rebuttal—expiration of losses in foreign country. (i) *Facts.* P owns DRC_X, a member of the P consolidated group. In year 1, DRC_X incurs a dual consolidated loss of $100x. P makes a domestic use election with respect to DRC_X's year 1 dual consolidated loss and such loss therefore is included in the computation of the P group's consolidated taxable income. DRC_X has no income or loss in year 2 through year 5. In year 5, P sells the stock of DRC_X to FS_X. At the time of the sale of the stock of DRC_X, all of the losses and deductions that were included in the computation of the year 1 dual consolidated loss of DRC_X had expired for Country X tax purposes because the laws of Country X only provide for a three-year carryover period for such items.

(ii) *Result.* The sale of DRC_X to FS_X generally would be a triggering event under §1.1503(d)–6(e)(1)(ii), which would require DRC_X to recapture the year 1 dual consolidated loss (and pay an applicable interest charge) on the P consolidated group's tax return for the year that includes the date on which DRC_X ceases to be a member of the P consolidated group. However, upon adequate documentation that the losses and deductions have expired for Country X tax purposes, P can rebut the presumption that a triggering event has occurred pursuant to §1.1503(d)–6(e)(2)(i). If the triggering event presumption is rebutted, the domestic use agreement filed by the P consolidated group with respect to the year 1 dual consolidated loss of DRC_X is terminated and has no further effect pursuant to §1.1503(d)–6(j)(1)(i). If the presumptive triggering event is not rebutted, the domestic use agreement would terminate and have no further effect pursuant to §1.1503(d)–6(j)(1)(iii) because the dual consolidated loss would be recaptured.

Example 33. Triggering events and rebuttals—tax basis carryover transaction. (i) *Facts.* (A) P owns $DE1_X$. $DE1_X$'s sole asset is A, which it acquired at the beginning of year 1 for $100x. $DE1_X$ does not have any liabilities. For U.S. tax purposes, $DE1_X$'s tax basis in A at the beginning of year 1 is $100x and $DE1_X$'s sole item of income, gain, deduction, and loss for year 1 is a $20x depreciation deduction attributable to A. As a result, the $20x depreciation deduction constitutes a dual consolidated loss attributable to P's interest in $DE1_X$. P makes a domestic use election with respect to the year 1 dual consolidated loss.

(B) For Country X tax purposes, $DE1_X$ has a $100x tax basis in A at the beginning of year 1, but A is not a depreciable asset. As a result, $DE1_X$ does not have any items of income, gain, deduction, and loss in year 1 for Country X tax purposes.

(C) During year 2, P sells its interest in $DE1_X$ to FS_X for $80x. P's disposition of its interest in $DE1_X$ constitutes a presumptive triggering event under §1.1503(d)–6(e)(1)(iv) and (v) requiring the recapture of the year 1 $20x dual consolidated loss (plus the applicable interest charge). For Country X tax purposes, $DE1_X$ retains its tax basis of $100x in A following the sale.

(ii) *Result.* The year 1 dual consolidated loss is a result of the $20x depreciation deduction attributable to A. Although no item of deduction or loss was recognized by $DE1_X$ at the time of the sale for Country X tax purposes, the deduction composing the dual consolidated loss was retained by $DE1_X$ after the sale in the form of tax basis in A. As a result, a portion of the dual consolidated loss may be available to offset income for Country X tax purposes in a manner that would constitute a foreign use. For example, if $DE1_X$ were to dispose of A, the amount of gain recognized by $DE1_X$ would be reduced (or an amount of loss recognized by $DE1_X$ would be increased) and, therefore, an item composing the dual consolidated loss would be available, under U.S. tax principles, to reduce income of a foreign corporation (and an owner of an interest in a hybrid entity that is not a separate unit). Thus, P cannot demonstrate pursuant to §1.1503(d)–6(e)(2)(i) that there can be no foreign use of the year 1 dual consolidated loss following the triggering event, and must recapture the year 1 dual consolidated loss. Pursuant to §1.1503(d)–6(j)(1)(iii), the domestic use agreement filed by the P consolidated group with respect to the year 1 dual consolidated loss is terminated and has no further effect.

(iii) *Alternative Facts.* The facts are the same as paragraph (i) of this *Example 33*, except that instead of P selling its interest in

$DE1_X$ to FS_X, $DE1_X$ sells asset A to FS_X for $80x and, for Country X tax purposes, FS_X's tax basis in A immediately after the sale is $80x. P's disposition of Asset A constitutes a presumptive triggering event under § 1.1503(d)–6(e)(1)(iv) requiring the recapture of the year 1 $20x dual consolidated loss (plus the applicable interest charge). For Country X tax purposes, FS_X's tax basis in A was not determined, in whole or in part, by reference to the basis of A in the hands of $DE1_X$. As a result, the deduction composing the dual consolidated loss will not give rise to an item of deduction or loss in the form of tax basis for Country X tax purposes (for example, when FS_X disposes of A). Therefore, P may be able to demonstrate (for example, by obtaining the opinion of a Country X tax advisor) pursuant to § 1.1503(d)–6(e)(2)(i) that there can be no foreign use of the year 1 dual consolidated loss and, thus, would not be required to recapture the year 1 dual consolidated loss.

Example 34. Triggering event resulting in a single consolidated group where acquirer files a new domestic use agreement. (i) *Facts.* P owns DRC_X, a member of the P consolidated group. In year 1, DRC_X incurs a dual consolidated loss and P makes a domestic use election with respect to such loss. No member of the P consolidated group incurs a dual consolidated loss in year 2. At the end of year 2, T, the parent of the T consolidated group, acquires all the stock of P, and all the members of the P group, including DRC_X, become members of a consolidated group of which T is the common parent.

(ii) *Result.* (A) Under § 1.1503(d)–6(f)(2)(ii)(B), the acquisition by T of the P consolidated group is not an event described in § 1.1503(d)–6(e)(1)(ii) requiring the recapture of the year 1 dual consolidated loss of DRC_X (and the payment of an interest charge), provided that the T consolidated group files a new domestic use agreement described in § 1.1503(d)–6(f)(2)(iii)(A). If a new domestic use agreement is filed, then pursuant to § 1.1503(d)–6(j)(1)(ii), the domestic use agreement filed by the P consolidated group with respect to the year 1 dual consolidated loss of DRC_X is terminated and has no further effect.

(B) Assume that T files a new domestic use agreement and a triggering event occurs at the end of year 3. As a result, the T consolidated group must recapture the dual consolidated loss that DRC_X incurred in year 1 (and pay an interest charge), as provided in § 1.1503(d)–6(h). Each member of the T consolidated group, including DRC_X and any former members of the P consolidated group, is severally liable for the additional tax (and the interest charge) due upon the recapture of the dual consolidated loss of DRC_X. In addition, pursuant to § 1.1503(d)–6(j)(1)(iii), the new domestic use agreement filed by the T group with respect to the year 1 dual consolidated loss of DRC_X is terminated and has no further effect.

Example 35. Triggering event exceptions for certain deemed transfers. (i) *Facts.* P owns $DE1_X$. In year 1, there is a $100x dual consolidated loss attributable to P's interest in $DE1_X$. P files a domestic use agreement under § 1.1503(d)–6(d) with respect to such loss. During year 2, P sells 33 percent of its interest in $DE1_X$ to T, an unrelated domestic corporation.

(ii) *Result.* Pursuant to Rev. Rul. 99–5, the transaction is treated as if P sold 33 percent of its interest in each of $DE1_X$'s assets to T and then immediately thereafter P and T transferred their interests in the assets of $DE1_X$ to a partnership in exchange for an ownership interest therein. Upon the transfer of 33 percent of P's interest to T, a domestic corporation, no foreign use occurs and, therefore, there is no foreign use triggering event. However, P's deemed transfer of 67 percent of its interest in the assets of $DE1_X$ to a partnership is nominally a triggering event under § 1.1503(d)–6(e)(1)(iv). Because the initial transfer of 33 percent of $DE1_X$'s interest was to a domestic corporation and there is only a triggering event because of the deemed transfer under Rev. Rul. 99–5, the deemed asset transfer is not treated as resulting in a triggering event pursuant to § 1.1503(d)–6(f)(4).

(iii) *Alternative Facts.* The facts are the same as in paragraph (i) of this *Example 35*, except that P sells 60 percent (rather than 33 percent) of its interest in $DE1_X$ to T. The sale is a triggering event under § 1.1503(d)–6(e)(1)(iv) and (v) without regard to the occurrence of a deemed transaction. Therefore, § 1.1503(d)–6(f)(4) does not apply.

Example 36. Triggering event exception involving multiple parties. (i) *Facts.* P owns $DE1_X$ which, in turn, owns FB_X. P's interest in $DE1_X$ and its indirect interest in FB_X are combined and treated as a single separate unit (Country X separate unit) pursuant to § 1.1503(d)–1(b)(4)(ii). In year 1, there is a $100x dual consolidated loss attributable to P's Country X separate unit and P makes a domestic use election with respect to such loss. No member of the P consolidated group incurs a dual consolidated loss in year 2. At the end of year 2, T, the parent of the T consolidated group, acquires all of P's interest in $DE1_X$ for cash.

(ii) *Result.* (A) Under § 1.1503(d)–6(f)(2)(i)(B), the acquisition by T of the interest in $DE1_X$ is not an event described in § 1.1503(d)–6(e)(1)(iv) or (v) requiring the recapture of the year 1 dual consolidated loss attributable to the Country X separate unit (and the payment of an interest charge), provided: (1) the T consolidated group files a new domestic use agreement described in § 1.1503(d)–6(f)(2)(iii)(A) with respect to the year 1 dual consolidated loss of the Country X separate unit; and (2) the P consolidated group files a

statement described in §1.1503(d)–6(f)(2)(iii)(B) with respect to the year 1 dual consolidated loss. If these requirements are satisfied, then pursuant to §1.1503(d)–6(j)(1)(ii) the domestic use agreement filed by the P consolidated group with respect to the year 1 dual consolidated loss is terminated and has no further effect (if these requirements are not satisfied such that the P consolidated group recaptures the dual consolidated loss, the domestic use agreement would terminate pursuant to §1.1503(d)–6(j)(1)(iii)).

(B) Assume a triggering event occurs at the end of year 3 that requires recapture by the T consolidated group of the year 1 dual consolidated loss, as well as the payment of an interest charge, as provided in §1.1503(d)–6(h). T continues to own the Country X separate unit after the triggering event. In that case, each member of the T consolidated group is severally liable for the additional tax (and the interest charge) due upon the recapture of the year 1 dual consolidated loss. The T consolidated group must prepare a statement that computes the recapture tax amount as provided under §1.1503(d)–6(h)(3)(iii). Pursuant to §1.1503(d)–6(h)(3)(iv)(A), the recapture tax amount is assessed as an income tax liability of the T consolidated group and is considered as having been properly assessed as an income tax liability of the P consolidated group. If the T consolidated group does not pay in full the income tax liability attributable to the recapture tax amount, the unpaid balance of such recapture tax amount may be collected from the P consolidated group in accordance with the provisions of §1.1503(d)–6(h)(3)(iv)(B). Pursuant to §1.1503(d)–6(j)(1)(iii), the new domestic use agreement filed by the T consolidated group is terminated and has no further effect. Finally, pursuant to §1.1503(d)–6(h)(6)(iii), T is treated as if it incurred the dual consolidated loss that is recaptured for purposes of applying §1.1503(d)–6(h)(6)(i). Thus, T has a reconstituted net operating loss equal to the amount of the year 1 dual consolidated loss that was recaptured, and such loss is attributable to the Country X separate unit (and subject to the rules and limitations under §1.1503(d)–6(h)(6)(i)). Because T is treated as if it incurred the year 1 dual consolidated loss, P shall not be treated as having a net operating loss under §1.1503(d)–6(h)(6)(i).

Example 37. No foreign use following multiple-party event exception to triggering event. (i) *Facts.* P owns $DE1_X$ which, in turn, owns FB_X. P's interest in $DE1_X$ and its indirect interest in FB_X are combined and treated as a single separate unit (Country X separate unit) pursuant to §1.1503(d)–1(b)(4)(ii). In year 1, there is a $100x dual consolidated loss attributable to P's Country X separate unit and P makes a domestic use election with respect to such loss. T, a domestic corporation unrelated to P, owns 95 percent of PRS, a partnership. FS_X owns the remaining 5 percent of PRS. At the beginning of year 3, PRS purchases 100 percent of the interest in $DE1_X$ from P for cash. For Country X tax purposes, the $100x loss incurred by $DE1_X$ in year 1 carries forward and is available to offset income of $DE1_X$ in subsequent years.

(ii) *Result.* P's sale of its interest in $DE1_X$ is a triggering event under §1.1503(d)–6(e)(1)(iv) and (v). However, if P and T comply with the requirements under §1.1503(d)–6(f)(2)(iii), the sale would qualify for the multiple-party event exception under §1.1503(d)–6(f)(2)(i). In addition, because the $100x loss of $DE1_X$ carries forward to subsequent years for Country X purposes and is available to offset income of $DE1_X$, there would be a foreign use of the dual consolidated loss immediately after the sale pursuant to §1.1503(d)–3(a)(1). This is the case because the dual consolidated loss would be available to offset or reduce income that is considered, under U.S. tax principles, to be an item of FS_X, a foreign corporation (it would also be a foreign use because FS_X is an indirect owner of an interest in a hybrid entity that is not a separate unit). However, there is no foreign use in this case as a result of FS_X's 5 percent interest in $DE1_X$ pursuant to §1.1503(d)–3(c)(8).

Example 38. Character and source of recapture income. (i) *Facts.* (A) P owns FB_X. In year 1, the items of income, gain, deduction, and loss that are attributable to FB_X for purposes of determining whether it has a dual consolidated loss are as follows:

Sales income	$100x
Salary expense	($75x)
Interest expense	($50x)
Dual consolidated loss	($25x)

(B) P makes a domestic use election with respect to the year 1 dual consolidated loss attributable to FB_X and, thus, the $25x dual consolidated loss is used to offset the P group's consolidated taxable income.

(C) Pursuant to §1.861–8, the $75x of salary expense incurred by FB_X is allocated and apportioned entirely to foreign source general limitation income. Pursuant to §1.861–9T, $25x of the $50x interest expense attributable to FB_X is allocated and apportioned to domestic source income, $15x of such interest expense is allocated and apportioned to foreign source general limitation income, and the remaining $10x of such interest expense is allocated and apportioned to foreign source passive income.

(D) During year 2, $5x of income is attributable to FB_X under the rules of §1.1503(d)–5, and the P consolidated group has $100x of consolidated taxable income. At the end of year 2, FB_X undergoes a triggering event described in §1.1503(d)–6(e)(1), and P continues to own FB_X following the triggering event. Pursuant to §1.1503(d)–6(h)(2)(i), P is able to

demonstrate to the satisfaction of the Commissioner that the $25x dual consolidated loss attributable to FB_X in year 1 would have offset the $5x of income attributable to FB_X in year 2, if no domestic use election were made with respect to the year 1 loss such that it was subject to the limitations of §1.1503(d)–4(b) and (c).

(ii) *Result*. P must recapture and report as ordinary income $20x ($25x − $5x) of FB_X's year 1 dual consolidated loss, plus applicable interest. The $20x recapture income is attributable to FB_X pursuant to §1.1503(d)–5(c)(4)(vi). Pursuant to §1.1503(d)–6(h)(5), the recapture income is treated as ordinary income whose source and character (including section 904 separate limitation character) is determined by reference to the manner in which the recaptured items of expense or loss taken into account in calculating the dual consolidated loss were allocated and apportioned. Further, pursuant to §1.1503(d)–6(h)(5), the pro rata computation described in §1.1503(d)–4(c)(4) shall apply. Thus, the character and source of the recapture income is determined in the same proportion as each item of deduction or loss that contributed to the dual consolidated loss being recaptured. Accordingly, P's $20x of recapture income is characterized and sourced as follows: $4x of domestic source income (($25x/$125x) × $20x); $14.4x of foreign source general limitation income (($75x + $15x)/$125x) × $20x); and $1.6x of foreign source passive income (($10x/$125x) × $20x). Pursuant to §1.1503(d)–6(h)(6)(i), commencing in year 3, the $20x recapture amount is reconstituted and treated as a net operating loss incurred by FB_X in a separate return limitation year, subject to the limitation under §1.1503(d)–4(b) (and therefore subject to the restrictions of §1.1503(d)–4(c)). Pursuant to §1.1503(d)–6(j)(1)(iii), the domestic use agreement filed by the P consolidated group with respect to the year 1 dual consolidated loss of FB_X is terminated and has no further effect.

Example 39. Interest charge without recapture. (i) *Facts*. P owns $DE1_X$ which, in turn, owns FB_X. P's interest in $DE1_X$ and its indirect interest in FB_X are combined and treated as a single separate unit (Country X separate unit) pursuant to §1.1503(d)–1(b)(4)(ii). In year 1, a dual consolidated loss of $100x is attributable to P's Country X separate unit. P makes a domestic use election with respect to such loss and uses the loss to offset the P group's consolidated taxable income. In year 2, there is $100x of income attributable to P's Country X separate unit and the P consolidated group has $200x of consolidated taxable income. At the end of year 2, the Country X separate unit undergoes a triggering event within the meaning of §1.1503(d)–6(e)(1). P demonstrates, to the satisfaction of the Commissioner, that if no domestic use election were made with respect to the year 1 dual consolidated loss such that it was subject to the limitations of §1.1503(d)–4(b) and (c), the year 1 $100x dual consolidated loss would have been offset by the $100x of year 2 income.

(ii) *Result*. There is no recapture of the year 1 dual consolidated loss attributable to P's Country X separate unit because it is reduced to zero under §1.1503(d)–6(h)(2)(i). However, P is liable for one year of interest charge under §1.1503(d)–6(h)(1)(ii), even though P's recapture amount is zero. This is the case because the P consolidated group had the benefit of the dual consolidated loss in year 1, and the income that offset the recapture income was not recognized until year 2. Pursuant to §1.1503(d)–6(j)(1)(iii), the domestic use agreement filed by the P consolidated group with respect to the year 1 dual consolidated loss is terminated and has no further effect.

Example 40. Reduced recapture and interest charge, and reconstituted dual consolidated loss. (i) *Facts*. S owns $DE1_X$ which, in turn, owns FB_X. S's interest in $DE1_X$ and its indirect interest in FB_X are combined and treated as a single separate unit (Country X separate unit) pursuant to §1.1503(d)–1(b)(4)(ii). In year 1, there is a $100x dual consolidated loss attributable to S's Country X separate unit, and P earns $100x. P makes a domestic use election with respect to the Country X separate unit's year 1 dual consolidated loss. Therefore, the consolidated group is permitted to offset P's $100x of income with the Country X separate unit's $100x dual consolidated loss. In year 2, $30x of income is attributable to the Country X separate unit under the rules of §1.1503(d)–5 and such income is offset by a $30x net operating loss incurred by P in such year. In year 3, $25x of income is attributable to the Country X separate unit under the rules of §1.1503(d)–5, and P earns $15x of income. In addition, at the end of year 3 there is a foreign use of the year 1 dual consolidated loss that constitutes a triggering event. S continues to own the Country X separate unit after the triggering event.

(ii) *Result*. (A) Under the presumptive rule of §1.1503(d)–6(h)(1)(i), S must recapture $100x (plus applicable interest). However, under §1.1503(d)–6(h)(2)(i), S may be able to demonstrate that a lesser amount is subject to recapture. The lesser amount is the amount of the $100x dual consolidated loss that would have remained subject to §1.1503(d)–4(c) at the time of the foreign use triggering event if a domestic use election had not been made for such loss.

(B) Although the combined separate unit earned $30x of income in year 2, there was no consolidated taxable income in such year. As a result, as of the end of year 2 the $100x dual consolidated loss would continue to be subject to §1.1503(d)–4(c) if a domestic use election had not been made for such loss. However, the $30x earned in year 2 can be carried

forward to subsequent taxable years and may reduce the recapture income to the extent of consolidated taxable income generated in subsequent years. In year 3, $25x of income was attributable to the Country X separate unit and P earns $15x of income. Thus, the P consolidated group has $40x of consolidated taxable income in year 3. As a result, the $100x of recapture income can be reduced by $40x. This is the case because if a domestic use election had not been made for the $100x year 1 dual consolidated loss such that it was subject to the limitations of §1.1503(d)–4(b) and (c), only $60x of the loss would have remained subject to such limitations at the time of the foreign use triggering event. Accordingly, if S can adequately document the lesser amount, the amount of recapture income is $60x ($100x − $40x). The $60x recapture income is attributable to the Country X separate unit pursuant to §1.1503(d)–5(c)(4)(vi).

(C) Pursuant to §1.1503(d)–6(h)(6)(i), commencing in year 4, the $60x recapture amount is reconstituted and treated as a net operating loss incurred by the Country X separate unit of S in a separate return limitation year, subject to the limitation under §1.1503(d)–4(b) (and therefore subject to the restrictions of §1.1503(d)–4(c)). The loss is only available for carryover to taxable years after year 3 (and is not available for carryback). The carryover period of the loss, for purposes of section 172(b), will start from year 1, when the dual consolidated loss that was subject to recapture was incurred. In addition, such reconstituted net operating loss is not eligible for the exceptions contained in §1.1503(d)–6(b) through (d). Pursuant to §1.1503(d)–6(j)(1)(iii), the domestic use agreement filed by the P consolidated group with respect to the year 1 dual consolidated loss of the Country X separate unit is terminated and has no further effect.

(iii) *Alternative Facts.* The facts are the same as in paragraph (i) of this *Example 40*, except that the triggering event that occurs at the end of year 3 is a sale by S of its entire interest in $DE1_X$ to B, an unrelated domestic corporation. The sale does not qualify as a transaction described in section 381. The results are the same as in paragraph (ii) of this *Example 40*, except that pursuant to §1.1503(d)–6(h)(6)(ii) the $60x net operating loss is not reconstituted (with respect to either S or B). The loss is not reconstituted with respect to S because the Country X separate unit ceases to be a separate unit of S (or any other member of the consolidated group that includes S) and therefore would have been eliminated pursuant to §1.1503(d)–4(d)(1)(ii) if no domestic use election had been made with respect to such loss. The loss is not reconstituted with respect to B because B was not the domestic owner of the combined separate unit when the dual consolidated loss that is recaptured was incurred, and B did not acquire the Country X separate unit in a section 381 transaction.

[T.D. 9315, 72 FR 12914, Mar. 19, 2007; 72 FR 20424, Apr. 25, 2007]

§ 1.1503(d)–8 Effective dates.

(a) *General rule.* Except as provided in paragraph (b) of this section, this paragraph (a) provides the dates of applicability of §§1.1503(d)–1 through 1.1503(d)–7. Sections 1.1503(d)–1 through 1.1503(d)–7 shall apply to dual consolidated losses incurred in taxable years beginning on or after April 18, 2007. However, a taxpayer may apply §§1.1503(d)–1 through 1.1503(d)–7, in their entirety, to dual consolidated losses incurred in taxable years beginning on or after January 1, 2007, by filing its return and attaching to such return the domestic use agreements, certifications, or other information in accordance with these regulations. For purposes of this section, the term *application date* means either April 18, 2007, or, if the taxpayer applies these regulations pursuant to the preceding sentence, January 1, 2007. Section 1.1503–2 applies for dual consolidated losses incurred in taxable years beginning on or after October 1, 1992, and before the application date.

(b) *Special rules*—(1) *Reduction of term of agreements filed under §§1.1503–2A(c)(3), 1.1503–2A(d)(3), 1.1503–2(g)(2)(i), or 1.1503–2T(g)(i).* If an agreement is filed in accordance with §§1.1503–2A(c)(3), 1.1503–2A(d)(3), 1.1503–2(g)(2)(i), or 1.1503–2T(g)(2)(i) with respect to a dual consolidated loss incurred in a taxable year beginning prior to the application date and an event requiring recapture with respect to the dual consolidated loss subject to the agreement has not occurred as of the application date, then such agreement will be considered by the Internal Revenue Service to apply only for any taxable year up to and including the fifth taxable year following the year in which the dual consolidated loss that is the subject of the agreement was incurred and thereafter will have no effect.

(2) *Reduction of term of agreements filed under §§1.1503–2(g)(2)(iv)(B)(2)(i) (1992), 1.1503–2(g)(2)(iv)(B)(3)(i), or Rev. Proc. 2000–42.* Taxpayers subject to the terms of a closing agreement entered into with the Internal Revenue Service pursuant to §§1.1503–2(g)(2)(iv)(B)(*2*)(*i*)

(1992), 1.1503–2(g)(2)(iv)(B)(*3*)(*i*), or Rev. Proc. 2000–42 (2000–2 CB 394), see § 601.601(d)(2)(ii)(*b*) of this chapter, will be deemed to have satisfied the closing agreement's fifteen-year certification period requirement if the five-year certification period specified in § 1.1503(d)–1(b)(20) has elapsed, provided such closing agreement is still in effect as of the application date, and provided the dual consolidated losses have not been recaptured. For example, if a calendar year taxpayer that has a January 1, 2007, application date entered into a closing agreement with respect to a dual consolidated loss incurred in 2003 and, as of January 1, 2007, the closing agreement is still in effect and the dual consolidated loss subject to the closing agreement has not been recaptured, then the closing agreement's fifteen-year certification period will be deemed satisfied when the five-year certification period described in § 1.1503(d)–1(b)(20) has elapsed. Thus, the dual consolidated loss will be subject to the recapture and certification provisions of the closing agreement in such a case only through December 31, 2008. Alternatively, if a calendar year taxpayer that has a January 1, 2007, application date entered into a closing agreement with respect to a dual consolidated loss incurred in 2000 and, as of January 1, 2007, the closing agreement is still in effect and the dual consolidated loss subject to the closing agreement has not been recaptured, then the certification period is deemed to be satisfied.

(3) *Relief for untimely filings.* Paragraphs (b)(3)(i) through (iii) of this section set forth the effective dates for rules that provide relief for the failure to make timely filings of an election, agreement, statement, rebuttal, computation, closing agreement, or other information, pursuant to section 1503(d) and these regulations.

(i) *General rule.* Except as provided in paragraphs (b)(3)(ii) and (iii) of this section, the reasonable cause relief standard of § 1.1503(d)–1(c) applies for all untimely filings with respect to dual consolidated losses, including with respect to dual consolidated losses incurred in taxable years beginning before the application date.

(ii) *Closing agreements.* Solely with respect to closing agreements described in § 1.1503–2(g)(2)(iv)(B)(*3*)(i) and Rev. Proc. 2000–42, taxpayers must request relief for untimely requests through the process provided under §§ 301.9100–1 through 301.9100–3 of this chapter. See paragraph (b)(4) of this section for rules that permit the multiple-party event exception, rather than closing agreements, for certain triggering events.

(iii) *Pending requests for relief.* Taxpayers that have letter ruling requests under §§ 301.9100–1 through 301.9100–3 of this chapter pending as of March 19, 2007 (other than requests under paragraph (b)(3)(ii) of this section) are not required to use the reasonable cause procedure under § 1.1503(d)–1(c); however, if such taxpayers have not yet received a determination of their request, they may withdraw their request consistent with the procedures contained in Rev. Proc. 2007–1 (2007–1 IRB 1), see § 601.601(d)(2)(ii)(*b*) of this chapter, (or any succeeding document) and use the reasonable cause procedure set forth in § 1.1503(d)–1(c). In that event, the Internal Revenue Service will refund the taxpayer's user fee.

(4) *Multiple-party event exception to triggering events.* This paragraph (b)(4) applies to events described in § 1.1503–2(g)(2)(iv)(B)(*1*)(*i*) through (*iii*) that occur after April 18, 2007 and that are with respect to dual consolidated losses that were incurred in taxable years beginning on or after October 1, 1992, and before the application date. The events described in the previous sentence are not eligible for the exception described in § 1.1503–2(g)(2)(iv)(B)(*1*), but instead are eligible for the multiple-party event exception described in § 1.1503(d)–6(f)(2)(i), as modified by this paragraph (b)(4). Thus, such events are not eligible for a closing agreement described in § 1.1503–2(g)(2)(iv)(B)(*3*)(*i*) and Rev. Proc. 2000–42. For purposes of applying § 1.1503(d)–6(f)(2)(i) to transactions covered by this paragraph, agreements described in § 1.1503–2(g)(2)(i) (rather than domestic use agreements) shall be filed, and subsequent triggering events and exceptions thereto have the meaning provided in § 1.1503–2(g)(2)(iii)(A) and (iv) (other than the exception provided under § 1.1503–2(g)(2)(iv)(B)(*1*)).

For example, if a calendar year taxpayer that has a January 1, 2007, application date filed an election under §1.1503–2(g)(2)(i) with respect to a dual consolidated loss that was incurred in 2004, and a triggering event described in §1.1503–2(g)(2)(iv)(B)(*1*)(*ii*) occurs with respect to such dual consolidated loss after April 18, 2007, then the event is eligible for the multiple-party event exception under §1.1503(d)–6(f)(2)(i) (and not the exception under §1.1503–2(g)(2)(iv)(B)(*1*)). However, in order to comply with §1.1503(d)–6(f)(2)(iii)(A), the subsequent elector must file a new agreement described in §1.1503–2(g)(2)(i) (rather than a new domestic use agreement). In addition, for purposes of determining whether there is a subsequent triggering event, and exceptions thereto, pursuant to such new agreement, §1.1503–2(g)(2)(iii)(A) and (iv) (other than the exception provided under §1.1503–2(g)(2)(iv)(B)(*1*)) shall apply. Notwithstanding the general application of this paragraph (b)(4) to events described in §1.1503–2(g)(2)(iv)(B)(*1*)(*i*) through (*iii*) that occur after April 18, 2007, a taxpayer may choose to apply this paragraph (b)(4) to events described in §1.1503–2(g)(2)(iv)(B)(*1*)(*i*) through (*iii*) that occur after March 19, 2007 and on or before April 18, 2007.

(5) *Basis adjustment rules.* Taxpayers may apply the basis adjustment rules of §1.1503(d)–5(g) for all open years in which such basis is relevant, even if the basis adjustment is attributable to a dual consolidated loss incurred (or recaptured) in a closed taxable year. Taxpayers applying the provisions of §1.1503(d)–5(g), however, must do so consistently for all open years.

[T.D. 9315, 72 FR 12914, Mar. 19, 2007; 72 FR 20424, Apr. 25, 2007]

§ 1.1504–0 Outline of provisions.

In order to facilitate the use of §§1.1504–1 through 1.1504–4, this section lists the captions contained in §§1.1504–1 through 1.1504–4.

§ 1.1504–1 Definitions.

§§ 1.1504–2—1.1504–3 [Reserved]

§ 1.1504–4 Treatment of warrants, options, convertible obligations, and other similar interests.

(a) Introduction.
(1) General rule.
(2) Exceptions.
(b) Options not treated as stock or as exercised.
(1) General rule.
(2) Options treated as exercised.
(i) In general.
(ii) Aggregation of options.
(iii) Effect of treating option as exercised.
(A) In general.
(B) Cash settlement options, phantom stock, stock appreciation rights, or similar interests.
(iv) Valuation.
(3) Example.
(c) Definitions.
(1) Issuing corporation.
(2) Related or sequential option.
(3) Related persons.
(4) Measurement date.
(i) General rule.
(ii) Issuances, transfers, or adjustments not treated as measurement dates.
(iii) Transactions increasing likelihood of exercise.
(iv) Measurement date for options issued pursuant to a plan.
(v) Measurement date for related or sequential options.
(vi) Example.
(5) In-the-money.
(d) Options.
(1) Instruments treated as options.
(2) Instruments generally not treated as options.
(i) Options on section 1504(a)(4) stock.
(ii) Certain publicly traded options.
(A) General rule.
(B) Exception.
(iii) Stock purchase agreements.
(iv) Escrow, pledge, or other security agreements.
(v) Compensatory options.
(A) General rule.
(B) Exceptions.
(vi) Options granted in connection with a loan.
(vii) Options created pursuant to a title 11 or similar case.
(viii) Convertible preferred stock.
(ix) Other enumerated instruments.
(e) Elimination of federal income tax liability.
(f) Substantial amount of federal income tax liability.
(g) Reasonable certainty of exercise.
(1) Generally.
(i) Purchase price.
(ii) In-the-money option.

(iii) Not in-the-money option.
(iv) Exercise price.
(v) Time of exercise.
(vi) Related or sequential options.
(vii) Stockholder rights.
(viii) Restrictive covenants.
(ix) Intention to alter value.
(x) Contingencies.
(2) Cash settlement options, phantom stock, stock appreciation rights, or similar interests.
(3) Safe harbors.
(i) Options to acquire stock.
(ii) Options to sell stock.
(iii) Options exercisable at fair market value.
(iv) Exceptions.
(v) Failure to satisfy safe harbor.
(h) Examples.
(i) Effective date.

[T.D. 8462, 57 FR 61800, Dec. 29, 1992]

§ 1.1504–1 Definitions.

The privilege of filing consolidated returns is extended to all includible corporations constituting affiliated groups as defined in section 1504. See the regulations under § 1.1502 for a description of an affiliated group and the corporations which may be considered as includible corporations.

[T.D. 6500, 25 FR 12106, Nov. 26, 1960]

§§ 1.1504–2—1.1504–3 [Reserved]

§ 1.1504–4 Treatment of warrants, options, convertible obligations, and other similar interests.

(a) *Introduction*—(1) *General rule*. This section provides regulations under section 1504(a)(5) (A) and (B) regarding the circumstances in which warrants, options, obligations convertible into stock, and other similar interests are treated as exercised for purposes of determining whether a corporation is a member of an affiliated group. The fact that an instrument may be treated as an option under these regulations does not prevent such instrument from being treated as stock under general principles of law. Except as provided in paragraph (a)(2) of this section, this section applies to all provisions under the Internal Revenue Code and the regulations to which affiliation within the meaning of section 1504(a) (with or without the exceptions in section 1504(b)) is relevant, including those provisions that refer to section 1504(a)(2) (with or without the exceptions in section 1504(b)) without referring to affiliation, provided that the 80 percent voting power and 80 percent value requirements of section 1504(a)(2) are not modified therein.

(2) *Exceptions*. This section does not apply to sections 163(j), 864(e), or 904(i) or to the regulations thereunder. This section also does not apply to any other provision specified by the Internal Revenue Service in regulations, a revenue ruling, or revenue procedure. See § 601.601(d)(2)(ii)(*b*) of this chapter.

(b) *Options not treated as stock or as excerised*—(1) *General rule*. Except as provided in paragraph (b)(2) of this section, an option is not considered either as stock or as exercised. Thus, options are disregarded in determining whether a corporation is a member of an affiliated group unless they are described in paragraph (b)(2) of this section.

(2) *Options treated as exercised*—(i) *In general*. Solely for purposes of determining whether a corporation is a member of an affiliated group, an option is treated as exercised if, on a measurement date with respect to such option—

(A) It could reasonably be anticipated that, if not for this section, the issuance or transfer of the option in lieu of the issuance, redemption, or transfer of the underlying stock would result in the elimination of a substantial amount of federal income tax liability (as described in paragraphs (e) and (f) of this section); and

(B) It is reasonably certain that the option will be exercised (as described in paragraph (g) of this section).

(ii) *Aggregation of options*. All options with the same measurement date are aggregated in determining whether the issuance or transfer of an option in lieu of the issuance, redemption, or transfer of the underlying stock would result in the elimination of a substantial amount of federal income tax liability.

(iii) *Effect of treating option as exercised*—(A) *In general*. An option that is treated as exercised is treated as exercised for purposes of determining the percentage of the value of stock owned by the holder and other parties, but is not treated as exercised for purposes of determining the percentage of the voting power of stock owned by the holder and other parties.

(B) *Cash settlement options, phantom stock, stock appreciation rights, or similar interests.* If a cash settlement option, phantom stock, stock appreciation right, or similar interest is treated as exercised, the option is treated as having been converted into stock of the issuing corporation. If the amount to be received upon the exercise of such an option is determined by reference to a multiple of the increase in the value of a share of the issuing corporation's stock on the exercise date over the value of a share of the stock on the date the option is issued, the option is treated as converted into a corresponding number of shares of such stock. Appropriate adjustments must be made in any situation in which the amount to be received upon exercise of the option is determined in another manner.

(iv) *Valuation.* For purposes of section 1504(a)(2)(B) and this section, all shares of stock within a single class are considered to have the same value. Thus, control premiums and minority and blockage discounts within a single class are not taken into account.

(3) *Example.* The provisions of paragraph (b)(2) of this section may be illustrated by the following example:

Example. (i) Corporation P owns all 100 shares of the common stock of Corporation S, the only class of S stock outstanding. Each share of S stock has a fair market value of $10 and has one vote. On June 30, 1992, P issues to Corporation X an option to acquire 80 shares of the S stock from P.

(ii) If, under the provisions of this section, the option is treated as exercised, then, solely for purposes of determining affiliation, P is treated as owning only 20 percent of the value of the outstanding S stock and X is treated as owing the remaining 80 percent of the value of the S stock. P is still treated as owning all of the voting power of S. Accordingly, because P is treated as owning less than 80 percent of the value of the outstanding S stock, P and S are no longer affiliated. However, because X is not treated as owning any of the voting power of S, X and S are also not affiliated.

(c) *Definitions.* For purposes of this section—

(1) *Issuing corporation.* ''Issuing corporation'' means the corporation whose stock is subject to an option.

(2) *Related or sequential option.* ''Related or sequential option'' means an option that is one of a series of options issued to the same or related persons. For purposes of this section, any options issued to the same person or related persons within a two-year period are presumed to be part of a series of options. This presumption may be rebutted if the facts and circumstances clearly establish that the options are not part of a series of options. Any options issued to the same person or related persons more than two years apart are presumed not to be part of a series of options. This presumption may be rebutted if the facts and circumstances clearly establish that the options are part of a series of options.

(3) *Related persons.* Persons are related if they are related within the meaning of section 267(b) (without the application of sections 267(c) and 1563(e)(1)) or 707(b)(1), substituting ''10 percent'' for ''50 percent'' wherever it appears.

(4) *Measurement date*—(i) *General rule.* ''Measurement date'' means a date on which an option is issued or transferred or on which the terms of an existing option or the underlying stock are adjusted (including an adjustment pursuant to the terms of the option or the underlying stock).

(ii) *Issuances, transfers, or adjustments not treated as measurement dates.* A measurement date does not include a date on which—

(A) An option is issued or transferred by gift, at death, or between spouses or former spouses under section 1041;

(B) An option is issued or transferred—

(*1*) Between members of an affiliated group (determined with the exceptions in section 1504(b) and without the application of this section); or

(*2*) Between persons none of which is a member of the affiliated group (determined without the exceptions in section 1504(b) and without the application of this section), if any, of which the issuing corporation is a member, unless—

(*i*) Any such person is related to (or acting in concert with) the issuing corporation or any member of its affiliated group; and

(*ii*) The issuance or transfer is pursuant to a plan a principal purpose of which is to avoid the application of section 1504 and this section;

(C) An adjustment occurs in the terms or pursuant to the terms of an option or the underlying stock that does not materially increase the likelihood that the option will be exercised; or

(D) A change occurs in the exercise price of an option or in the number of shares that may be issued or transferred pursuant to the option as determined by a bona fide, reasonable, adjustment formula that has the effect of preventing dilution of the interests of the holders of the options.

(iii) *Transactions increasing likelihood of exercise.* If a change or alteration referred to in this paragraph (c)(4)(iii) is made for a principal purpose of increasing the likelihood that an option will be exercised, a measurement date also includes any date on which—

(A) The capital structure of the issuing corporation is changed; or

(B) The fair market value of the stock of the issuing corporation is altered through a transfer of assets to or from the issuing corporation (other than regular, ordinary dividends) or by any other means.

(iv) *Measurement date for options issued pursuant to a plan.* In the case of options issued pursuant to a plan, a measurement date for any of the options constitutes a measurement date for all options issued pursuant to the plan that are outstanding on the measurement date.

(v) *Measurement date for related or sequential options.* In the case of related or sequential options, a measurement date for any of the options constitutes a measurement date for all related or sequential options that are outstanding on the measurement date.

(vi) *Example.* The provisions of paragraph (c)(4)(v) of this section may be illustrated by the following example.

Example. (i) Corporation P owns all 80 shares of the common stock of Corporation S, the only class of S stock outstanding. On January 1, 1992, S issues a warrant, exercisable within 3 years, to U, an unrelated corporation, to acquire 10 newly issued shares of S common stock. On July 1, 1992, S issues a second warrant to U to acquire 10 additional newly issued shares of S common stock. On January 1, 1993, S issues a third warrant to T, a wholly owned subsidiary of U, to acquire 10 newly issued shares of S common stock. Assume that the facts and circumstances do not clearly establish that the options are not part of a series of options.

(ii) January 1, 1992, July 1, 1992, and January 1, 1993, constitute measurement dates for the first warrant, the second warrant, and the third warrant, respectively, because the warrants were issued on those dates.

(iii) Because the first and second warrants were issued within two years of each other, and both warrants were issued to U, the warrants constitute related or sequential options. Accordingly, July 1, 1992, constitutes a measurement date for the first warrant as well as for the second warrant.

(iv) Because the first, second, and third warrants were all issued within two years of each other, and were all issued to the same or related persons, the warrants constitute related or sequential options. Accordingly, January 1, 1993, constitutes a measurement date for the first and second warrants, as well as for the third warrant.

(5) *In-the-money.* ''In-the-money'' means the exercise price of the option is less than (or in the case of an option to sell stock, greater than) the fair market value of the underlying stock.

(d) *Options*—(1) *Instruments treated as options.* For purposes of this section, except to the extent otherwise provided in this paragraph (d), the following are treated as options:

(i) A call option, warrant, convertible obligation, put option, redemption agreement (including a right to cause the redemption of stock), or any other instrument that provides for the right to issue, redeem, or transfer stock (including an option on an option); and

(ii) A cash settlement option, phantom stock, stock appreciation right, or any other similar interest (except for stock).

(2) *Instruments generally not treated as options.* For purposes of this section, the following will not be treated as options:

(i) *Options on section 1504(a)(4) stock.* Options on stock described in section 1504(a)(4);

(ii) *Certain publicly traded options*—(A) *General rule.* Options which on the measurement date are traded on (or subject to the rules of) a qualified board or exchange as defined in section 1256(g)(7), or on any other exchange, board of trade, or market specified by

the Internal Revenue Service in regulations, a revenue ruling, or revenue procedure. See §601.601(d)(2)(ii)(*b*) of this chapter;

(B) *Exception*. Paragraph (d)(2)(ii)(A) of this section does not apply to options issued, transferred, or listed with a principal purpose of avoiding the application of section 1504 and this section. For example, a principal purpose of avoiding the application of section 1504 and this section may exist if warrants, convertible or exchangeable debt instruments, or other similar instruments have an exercise price (or, in the case of convertible or exchangeable instruments, a conversion or exchange premium) that is materially less than, or a term that is materially longer than, those that are customary for publicly traded instruments of their type. A principal purpose may also exist if a large percentage of an issuance of an instrument is placed with one investor (or group of investors) and a very small percentage of the issuance is traded on a qualified board or exchange;

(iii) *Stock purchase agreements*. Stock purchase agreements or similar arrangements whose terms are commercially reasonable and in which the parties' obligations to complete the transaction are subject only to reasonable closing conditions;

(iv) *Escrow, pledge, or other security agreements*. Agreements for holding stock in escrow or under a pledge or other security agreement that are part of a typical commercial transaction and that are subject to customary commercial conditions;

(v) *Compensatory options*—(A) *General rule*. Stock appreciation rights, warrants, stock options, phantom stock, or other similar instruments provided to employees, directors, or independent contractors in connection with the performance of services for the corporation or a related corporation (and that is not excessive by reference to the services performed) and which—

(*1*) Are nontransferable within the meaning of §1.83–3(d); and

(*2*) Do not have a readily ascertainable fair market value as defined in §1.83–7(b) on the measurement date;

(B) *Exceptions*. (*1*) Paragraph (d)(2)(v)(A) of this section does not apply to options issued or transferred with a principal purpose of avoiding the application of section 1504 and this section; and

(*2*) Paragraph (d)(2)(v)(A) of this section ceases to apply to options that become transferable;

(vi) *Options granted in connection with a loan*. Options granted in connection with a loan if the lender is actively and regularly engaged in the business of lending and the options are issued in connection with a loan to the issuing corporation that is commercially reasonable. This paragraph (d)(2)(vi) continues to apply if the option is transferred with the loan (or if a portion of the option is transferred with a corresponding portion of the loan). However, if the option is transferred without a corresponding portion of the loan, this paragraph (d)(2)(vi) ceases to apply;

(vii) *Options created pursuant to a title 11 or similar case*. Options created by the solicitation or receipt of acceptances to a plan of reorganization in a title 11 or similar case (within the meaning of section 368(a)(3)(A)), the option created by the confirmation of the plan, and any option created under the plan prior to the time the plan becomes effective;

(viii) *Convertible preferred stock*. Convertible preferred stock, provided the terms of the conversion feature do not permit or require the tender of any consideration other than the stock being converted; and

(ix) *Other enumerated instruments*. Any other instruments specified by the Internal Revenue Service in regulations, a revenue ruling, or revenue procedure. See §601.601(d)(2)(ii)(*b*) of this chapter.

(e) *Elimination of federal income tax liability*. For purposes of this section, the elimination of federal income tax liability includes the elimination or deferral of federal income tax liability. In determining whether there is an elimination of federal income tax liability, the tax consequences to all involved parties are considered. Examples of elimination of federal income tax liability include the use of a loss or deduction that would not otherwise be utilized, the acceleration of a loss or deduction to a year earlier than the year in which the loss or deduction

would otherwise be utilized, the deferral of gain or income to a year later than the year in which the gain or income would otherwise be reported, and the acceleration of gain or income to a year earlier than the year in which the gain or income would otherwise be reported, if such gain or income is offset by a net operating loss or net capital loss that would otherwise expire unused. The elimination of federal income tax liability does not include the deferral of gain with respect to the stock subject to the option that would be recognized if such stock were sold on a measurement date.

(f) *Substantial amount of federal income tax liability*. The determination of what constitutes a substantial amount of federal income tax liability is based on all the facts and circumstances, including the absolute amount of the elimination, the amount of the elimination relative to overall tax liability, and the timing of items of income and deductions, taking into account present value concepts.

(g) *Reasonable certainty of exercise*—(1) *Generally*. The determination of whether, as of a measurement date, an option is reasonably certain to be exercised is based on all the facts and circumstances, including:

(i) *Purchase price*. The purchase price of the option in absolute terms and in relation to the fair market value of the stock or the exercise price of the option;

(ii) *In-the-money option*. Whether and to what extent the option is in-the-money on the measurement date;

(iii) *Not in-the-money option*. If the option is not in-the-money on the measurement date, the amount or percentage by which the exercise price of the option is greater than (or in the case of an option to sell stock, is less than) the fair market value of the underlying stock;

(iv) *Exercise price*. Whether the exercise price of the option is fixed or fluctuates depending on the earnings, value, or other indication of economic performance of the issuing corporation;

(v) *Time of exercise*. The time at which, or the period of time during which, the option can be exercised;

(vi) *Related or sequential options*. Whether the option is one in a series of related or sequential options;

(vii) *Stockholder rights*. The existence of an arrangement (either within the option agreement or in a related agreement) that, directly or indirectly, affords managerial or economic rights in the issuing corporation that ordinarily would be afforded to owners of the issuing corporation's stock (e.g., voting rights, dividend rights, or rights to proceeds on liquidation) to the person who would acquire the stock upon exercise of the option or a person related to such person. For this purpose, managerial or economic rights in the issuing corporation possessed because of actual stock ownership in the issuing corporation are not taken into account;

(viii) *Restrictive covenants*. The existence of restrictive covenants or similar arrangements (either within the option agreement or in a related agreement) that, directly or indirectly, prevent or limit the ability of the issuing corporation to undertake certain activities while the option is outstanding (e.g., covenants limiting the payment of dividends or borrowing of funds);

(ix) *Intention to alter value*. Whether it was intended that through a change in the capital structure of the issuing corporation or a transfer of assets to or from the issuing corporation (other than regular, ordinary dividends) or by any other means, the fair market value of the stock of the issuing corporation would be altered for a principal purpose of increasing the likelihood that the option would be exercised; and

(x) *Contingencies*. Any contingency (other than the mere passage of time) to which the exercise of the option is subject (e.g., a public offering of the issuing corporation's stock or reaching a certain level of earnings).

(2) *Cash settlement options, phantom stock, stock appreciation rights, or similar interests*. A cash settlement option, phantom stock, stock appreciation right, or similar interest is treated as reasonably certain to be exercised if it is reasonably certain that the option will have value at some time during the period in which the option may be exercised.

(3) *Safe harbors*—(i) *Options to acquire stock*. Except as provided in paragraph

(g)(3)(iv) of this section, an option to acquire stock is not considered reasonably certain, as of a measurement date, to be exercised if—

(A) The option may be exercised no more than 24 months after the measurement date and the exercise price is equal to or greater than 90 percent of the fair market value of the underlying stock on the measurement date; or

(B) The terms of the option provide that the exercise price of the option is equal to or greater than the fair market value of the underlying stock on the exercise date.

(ii) *Options to sell stock.* Except as provided in paragraph (g)(3)(iv) of this section, an option to sell stock is not considered reasonably certain, as of a measurement date, to be exercised if—

(A) The option may be exercised no more than 24 months after the measurement date and the exercise price is equal to or less than 110 percent of the fair market value of the underlying stock on the measurement date; or

(B) The terms of the option provide that the exercise price of the option is equal to or less than the fair market value of the underlying stock on the exercise date.

(iii) *Options exercisable at fair market value.* For purposes of paragraphs (g)(3)(i)(B) and (g)(3)(ii)(B) of this section, an option whose exercise price is determined by a formula is considered to have an exercise price equal to the fair market value of the underlying stock on the exercise date if the formula is agreed upon by the parties when the option is issued in a bona fide attempt to arrive at fair market value on the exercise date and is to be applied based upon the facts in existence on the exercise date.

(iv) *Exceptions.* The safe harbors of this paragraph (g)(3) do not apply if—

(A) An arrangement exists that provides the holder or a related party with stockholder rights described in paragraph (g)(1)(vii) of this section (except for rights arising upon a default under the option or a related agreement);

(B) It is intended that through a change in the capital structure of the issuing corporation or a transfer of assets to or from the issuing corporation (other than regular, ordinary dividends) or by any other means, the fair market value of the stock of the issuing corporation will be altered for a principal purpose of increasing the likelihood that the option will be exercised; or

(C) The option is one in a series of related or sequential options, unless all such options satisfy paragraph (g)(3) (i) or (ii) of this section.

(v) *Failure to satisfy safe harbor.* Failure of an option to satisfy one of the safe harbors of this paragraph (g)(3) does not affect the determination of whether an option is treated as reasonably certain to be exercised.

(h) *Examples.* The provisions of this section may be illustrated by the following examples. These examples assume that the measurement dates set forth in the examples are the only measurement dates that have taken place or will take place.

Example 1. (i) P is the common parent of a consolidated group, consisting of P, S, and T. P owns all 100 shares of S's only class of stock, which is voting common stock. P also owns all the stock of T. On June 30, 1992, when the fair market value of the S stock is $40 per share, P sells to U, an unrelated corporation, an option to acquire 40 shares of the S stock that P owns at an exercise price of $30 per share, exercisable at any time within 3 years after the granting of the option. P and T have had substantial losses for 5 consecutive years while S has had substantial income during the same period. Because P, S, and T have been filing consolidated returns, P and T have been able to use all of their losses to offset S's income. It is anticipated that P, S, and T will continue their earnings histories for several more years. On July 31, 1992, S declares and pays a dividend of $1 per share to P.

(ii) If P, S, and T continue to file consolidated returns after June 30, 1992, it could reasonably be anticipated that P, S, and T would eliminate a substantial amount of federal income tax liability by using P's and T's future losses to offset S's income in consolidated returns. Furthermore, based on the difference between the exercise price of the option and the fair market value of the S stock, it is reasonably certain, on June 30, 1992, a measurement date, that the option will be exercised. Therefore, the option held by U is treated as exercised. As a result, for purposes of determining whether P and S are affiliated, P is treated as owning only 60 percent of the value of outstanding shares of S stock and U is treated as owning the remaining 40 percent. P is still treated as owning 100 percent of the voting power. Because

members of the P group are no longer treated as owning stock possessing 80 percent of the total value of the S stock as of June 30, 1992, S is no longer a member of the P group. Additionally, P is not entitled to a 100 percent dividends received deduction under section 243(a)(3) because P and S are also treated as not affiliated for purposes of section 243. P is only entitled to an 80 percent dividends received deduction under section 243(c).

Example 2. (i) The facts are the same as in *Example 1* except that rather than P issuing an option to acquire 40 shares of S stock to U on June 30, 1992, P, pursuant to a plan, issues an option to U1 on July 1, 1992, to acquire 20 shares of S stock, and issues an option to U2 on July 2, 1992, to acquire 20 shares of S stock.

(ii) Because the options issued to U1 and U2 were issued pursuant to a plan, July 2, 1992, constitutes a measurement data for both options. Therefore, both options are aggregated in determining whether the issuance of the options, rather than the sale of the S stock, would result in the elimination of a substantial amount of federal income tax liability. Accordingly, as in *Example 1*, because the continued affiliation of P, S, and T could reasonably be anticipated to result in the elimination of a substantial amount of federal income tax liability and the options are reasonably certain to be exercised, the options are treated as exercised for purposes of determining whether P and S are affiliated, and P and S are no longer affiliated as of July 2, 1992.

Example 3. (i) The facts are the same as in *Example 1* except that the option gives U the right to acquire all 100 shares of the S stock, and U is the common parent of a consolidated group. The U group has had substantial losses for 5 consecutive years and it is anticipated that the U group will continue its earnings history for several more years.

(ii) If P sold the S stock, in lieu of the option, to U, S would become a member of the U group. Because the U group files consolidated returns, if P sold the S stock to U, U would be able to use its future losses to offset future income of S. When viewing the transaction from the effect on all parties, the sale of the option, in lieu of the underlying S stock, does not result in the elimination of federal income tax liability because S's income would be offset by the losses of members of either the P or U group. Accordingly, the option is disregarded and S remains a member of the P group.

Example 4. (i) P is the common parent of a consolidated group, consisting of P and S. P owns 90 of the 100 outstanding shares of S's only class of stock, which is voting common stock, and U, an unrelated corporation, owns the remaining 10 shares. On August 31, 1992, when the fair market value of the S stock is $100 per share, P sells a call option to U that entitles U to purchase 20 shares of S stock from P, at any time before August 31, 1993, at an exercise price of $115 per share. The call option does not provide U with any voting rights, dividend rights, or any other managerial or economic rights ordinarily afforded to owners of the S stock. There is no intention on August 31, 1992, to alter the value of S to increase the likelihood of the exercise of the call option.

(ii) Because the exercise price of the call option is equal to or greater than 90 percent of the fair market value of the S stock on August 31, 1992, a measurement date, the option may be exercised no more than 24 months after the measurement date, and none of the items described in paragraph (g)(3)(iv) of this section that preclude application of the safe harbor are present, the safe harbor of paragraph (g)(3)(i) of this section applies and the call option is treated as if it is not reasonably certain to be exercised. Therefore, regardless of whether the continued affiliation of P and S would result in the elimination of a substantial amount of federal income tax liability, the call option is disregarded in determining whether S remains a member of the P group.

Example 5. (i) The facts are the same as in *Example 4* except that the call option gives U the right to vote similar to that of a shareholder.

(ii) Under paragraph (g)(3)(iv) of this section, the safe harbor of paragraph (g)(3)(i) of this section does not apply because the call option entitles U to voting rights equivalent to that of a shareholder. Accordingly, all of the facts and circumstances surrounding the sale of the call option must be taken into consideration in determining whether it is reasonably certain that the call option will be exercised.

Example 6. (i) In 1992, two unrelated corporations, X and Y, decide to engage jointly in a new business venture. To accomplish this purpose, X organizes a new corporation, S, on September 30, 1992. X acquires 100 shares of the voting common stock of S, which are the only shares of S stock outstanding. Y acquires a debenture of S which is convertible, on September 30, 1995, into 100 shares of S common stock. If the conversion right is not exercised, X will have the right, on September 30, 1995, to put 50 shares of its S stock to Y in exchange for 50 percent of the debenture held by Y. The likelihood of the success of the venture is uncertain. It is anticipated that S will generate substantial losses in its early years of operation. X expects to have substantial taxable income during the three years following the organization of S.

(ii) Under the terms of this arrangement, it is reasonably certain on September 30, 1992, a measurement date, that on September 30, 1995, either through Y's exercise of its conversion right or X's right to put S stock to

Y, that Y will own 50 percent of the S stock. Additionally, it could reasonably be anticipated, on September 30, 1992, a measurement date, that the affiliation of X and S would result in the elimination of a substantial amount of federal income tax liability. Accordingly, for purposes of determining whether X and S are affiliated, X is treated as owning only 50 percent of the value of the S stock as of September 30, 1992, a measurement date, and S is not a member of the X affiliated group.

Example 7. (i) The facts are the same as in *Example 6* except that rather than acquiring 100 percent of the S stock and the right to put S stock to Y, X acquires only 80 percent of the S stock, while S, rather than acquiring a convertible debenture, acquires 20 percent of the S stock, and an option to acquire an additional 30 percent of the S stock. The terms of the option are such that the option will only be exercised if the new business venture succeeds.

(ii) In contrast to *Example 6*, because of the true business risks involved in the start-up of S and whether the business venture will ultimately succeed, along with the fact that X does not have an option to put S stock to Y, it is not reasonably certain on September 30, 1992, a measurement date, that the option will be exercised and that X will only own 50 percent of the S stock on September 30, 1995. Accordingly, the option is disregarded in determining whether S is a member of the X group.

(i) *Effective date.* This section applies, generally, to options with a measurement date on or after February 28, 1992. This section does not apply to options issued prior to February 28, 1992, which have a measurement date on or after February 28, 1992, if the measurement date for the option occurs solely because of an adjustment in the terms of the option pursuant to the terms of the option as it existed on February 28, 1992. Paragraph (b)(2)(iv) of this section applies to stock outstanding on or after February 28, 1992.

[T.D. 8462, 57 FR 61801, Dec. 29, 1992; 58 FR 7041, Feb. 3, 1993]

REGULATIONS APPLICABLE FOR TAX YEARS FOR WHICH A RETURN IS DUE ON OR BEFORE AUGUST 11, 1999

§ 1.1502–9A Application of overall foreign loss recapture rules to corporations filing consolidated returns due on or before August 11, 1999.

(a) *Scope*—(1) *Effective date.* This section applies only to consolidated return years for which the due date of the income tax return (without extensions) is on or before August 11, 1999.

(2) *In general.* Affiliated group of corporations filing a consolidated return sustains an overall foreign loss (a consolidated overall foreign loss) in any taxable year in which its gross income from sources without the United States subject to a separate limitation (as defined in § 1.904(f)–1(c)(2)) is exceeded by the sum of the deductions properly allocated and apportioned thereto. However, for taxable years prior to 1983, affiliated groups may have determined their overall foreign losses for income subject to the passive interest limitation, DISC dividend limitation, and general limitation on a combined basis in accordance with the rules in § 1.904(f)–1(c)(1). The rules contained in §§ 1.904(f)–1 through 1.904(f)–6 are applicable to affiliated groups filing consolidated returns. This section provides special rules for applying those sections to such groups. Paragraph (b) provides rules for additions and subtractions of a portion of overall foreign losses to and from consolidated overall foreign loss accounts. Paragraph (c) requires that separate notional overall foreign loss accounts be kept for each member of the group that contributes to a consolidated overall foreign loss account and provides for allocation of a portion of the group's overall foreign loss account to a member when the member leaves the group prior to recapture of the entire amount of the loss account. These rules are similar to the rules provided in § 1.1502–21(b)(2) (or § 1.1502-79A, as appropriate) concerning the apportionment of consolidated net operating losses to a member who leaves the group. However, the rules differ somewhat because the absorption rule of § 1.1502–21(b)(1) (or § 1.1502-79A, as appropriate) is applied year-by-year, consistently with the sequence rules of section 172(b), and recapture of overall foreign losses is based on overall foreign loss accounts that may consist of losses in more than one year. Paragraph (d) provides rules for recapture of amounts in consolidated overall foreign loss accounts. Paragraph (e) provides special rules pertaining to section 904(f)(3) dispositions between members of a group. Paragraphs (b),

(c), and (e) also contain special rules that apply to overall foreign losses that arise in separate return limitation years; the principles therein also apply to overall foreign losses when there has been a consolidated return change of ownership (as defined in § 1.1502–1(g)). See § 1.1502–9T(b)(1)(v) for the rule that ends the separate return limitation year limitation for consolidated return years for which the due date of the income tax return (without extensions) is after March 13, 1998, and § 1.1502–9T(b)(1)(vi) for an election to continue the separate return limitation year limitation for consolidated return years beginning before January 1, 1998. See also § 1.1502–3(d)(4) for an optional effective date rule (generally making the rules of paragraphs (b)(1)(iii) and (iv) of this section inapplicable for a consolidated return year beginning after December 31, 1996, if the due date of the income tax return (without extensions) for such year is on or before March 13, 1998).

(b) *Consolidated overall foreign loss accounts.* Any group that sustains an overall foreign loss (or acquires a member with a balance in an overall foreign loss account) must establish a consolidated overall foreign loss account for such loss, and amounts shall be added to and subtracted from such account as provided in §§ 1.904(f)–1 through 1.904(f)–6 and this section.

(1) *Additions to the consolidated overall foreign loss accounts*—(i) *Consolidated overall foreign losses.* Any consolidated overall foreign loss shall be added to the applicable consolidated overall foreign loss account for such separate limitation, to the extent that the overall foreign loss has reduced United States source income, in accordance with the rules of §§ 1.904(f)–1 and 1.904(f)–3.

(ii) *Overall foreign losses from separate return years.* If a corporation joins in the filing of a consolidated return in a taxable year in which such corporation has a balance in an overall foreign loss account from a prior separate return year that is not a separate return limitation year, such balance shall be added to the applicable consolidated overall foreign loss account in such year and treated as a consolidated overall foreign loss incurred in the previous year (and shall therefore be subject to recapture, in accordance with paragraph (d) of this section, beginning in the same year in which it is added to the consolidated overall foreign loss account).

(iii) *Overall foreign losses from separate return limitation years.* If a corporation joins in the filing of a consolidated return in a taxable year in which such corporation has a balance in an overall foreign loss account from a prior separate return limitation year, such balance shall be added to the applicable consolidated overall foreign loss account in such consolidated return year to the extent of the lesser of the balance in the overall foreign loss account from the separate return limitation year or 50 percent (or such larger percentage as the taxpayer may elect) of the difference between the consolidated foreign source taxable income subject to the same separate limitation (computed in accordance with §§ 1.904(f)–2(b) and 1.1502–4(d)(1)) minus such consolidated foreign source taxable income recomputed by excluding the items of income and deduction of such corporation (but not less than zero). The amount added to a consolidated overall foreign loss account in any taxable year under this paragraph (b)(1)(iii) shall be treated as a consolidated overall foreign loss in the previous year (and shall therefore be subject to recapture, in accordance with paragraph (d) of this section, beginning in the same year in which it is added to the consolidated overall foreign loss account).

(iv) *Overall foreign losses that are part of a net operating loss or net capital loss carried over from a separate return limitation year.* Overall foreign losses that are part of a net operating loss or net capital loss carryover from a separate return limitation year of a member that is absorbed in a consolidated return year shall be treated as though they were added to an overall foreign loss account in a separate return limitation year of such member and will be subject to the limitation on recapture of SRLY losses contained in paragraph (b)(1)(iii) of this section. See paragraph (c)(2) of this section for rules regarding the addition of such losses to the applicable overall foreign loss account of such member.

(v) *Special effective date for SRLY limitation.* Except as provided in paragraph (b)(1)(vi) of this section, paragraphs (b)(1)(iii) and (iv) of this section apply only to consolidated return years for which the due date of the income tax return (without extensions) is on or before March 13, 1998. For consolidated return years for which the due date of the income tax return (without extensions) is after March 13, 1998, the rules of paragraph (b)(1)(ii) of this section shall apply to overall foreign losses from separate return years that are separate return limitation years. For purposes of applying paragraph (b)(1)(ii) of this section in such years, the group treats a member with a balance in an overall foreign loss account from a separate return limitation year on the first day of the first consolidated return year for which the due date of the income tax return (without extensions) is after March 13, 1998, as a corporation joining the group on such first day. An overall foreign loss that is part of a net operating loss or net capital loss carryover from a separate return limitation year of a member that is absorbed in a consolidated return year for which the due date of the income tax return (without extensions) is after March 13, 1998, shall be added to the appropriate consolidated overall foreign loss account in the year that it is absorbed. For consolidated return years for which the due date of the income tax return (without extensions) is after March 13, 1998, similar principles apply to overall foreign losses when there has been a consolidated return change of ownership (regardless of when the change of ownership occurred). See also § 1.1502–3(d)(4) for an optional effective date rule (generally making this paragraph (b)(1)(v) applicable to a consolidated return year beginning after December 31, 1996, if the due date of the income tax return (without extensions) for such year is on or before March 13, 1998).

(vi) *Election to defer application of special effective date.* A consolidated group may elect not to apply paragraph (b)(1)(v) of this section to consolidated return years beginning before January 1, 1998. To make this election, a consolidated group must write ''Election Pursuant to Notice 98–40'' across the top of page 1 of an original or amended tax return for each consolidated return year subject to the election. For the first consolidated return year to which the overall foreign loss provisions of paragraph (b)(1)(v) of this section apply (i.e., the first year beginning on or after January 1, 1998), such consolidated group must write ''Notice 98–40 Election in Effect in Prior Years'' across the top of page 1 of the consolidated tax return for that year. For purposes of applying paragraph (b)(1)(ii) of this section with respect to such year, any member with a balance in an overall foreign loss account from a separate return limitation year on the first day of such year shall be treated as joining the group on such first day.

(2) *Reductions of the consolidated overall foreign loss accounts*—(i) *Amounts allocated to members leaving the group.* When a member leaves the group, each applicable consolidated overall foreign loss account shall be reduced by the amount allocated from such account to such member in accordance with paragraph (c)(3)(i) of this section.

(ii) *Amounts recaptured.* A consolidated overall foreign loss account shall be reduced by the amount of any overall foreign loss under the same separate limitation that is recaptured from consolidated income in accordance with § 1.904(f)–2.

(c) *Allocation of overall foreign losses among members of an affiliated group*—(1) *Notional overall foreign loss accounts.* Separate notional overall foreign loss accounts shall be established for each member of a group that contributes to a consolidated overall foreign loss account. Additions to and reductions of such notional accounts shall be made when additions or reductions are made to consolidated overall foreign loss accounts in accordance with paragraph (b) of this section and § 1.904(f)–1.

(i) *Additions to notional accounts*—(A) *Consolidated overall foreign losses.* When a consolidated overall foreign loss is added to a consolidated overall foreign loss account, each member shall add its pro rata share of the amount of such loss to the member's notional overall foreign loss account. A member's pro rata share of a consolidated overall foreign loss for any taxable year is determined by multiplying the consolidated

loss by a fraction. The numerator of this fraction is the amount by which the member's separate gross income for the taxable year from sources without the United States subject to the applicable separate limitation is exceeded by the sum of the deductions properly allocated and apportioned thereto (including such member's share of any consolidated net operating loss deduction and consolidated net capital loss carryovers and carrybacks to the taxable year), for each member with such deductions in excess of such income. The denominator of this fraction is the sum of the numerators of this fraction for all such members of the group.

(B) *Overall foreign losses from separate return years and separate return limitation years.* When an amount from a member's overall foreign loss account from a separate return year or separate return limitation year is added to a consolidated overall foreign loss account in accordance with paragraph (b)(1) (ii) or (iii) of this section, such amount shall also be added to that member's notional overall foreign loss account for such separate limitation.

(ii) *Reductions of notional accounts.* When a consolidated overall foreign loss account is reduced by recapture, in accordance with paragraph (b)(2)(ii) of this section, each member of the group shall reduce its notional overall foreign loss account for that separate limitation by its pro rata share of the amount by which the consolidated overall foreign loss account is reduced. A member's pro rata share of the amount by which a consolidated overall foreign loss account is reduced and determined by multiplying the amount recaptured by a fraction, the numerator of which is the amount in such member's notional account under such separate limitation, and the denominator of which is the amount in the consolidated overall foreign loss account under such separate limitation before reduction for the amount recaptured for that taxable year.

(2) *Overall foreign losses that are part of a net operating loss or net capital loss from a separate return limitation year.* An overall foreign loss that is part of a net operating loss or net capital loss carryover from a separate return limitation year of a member that is absorbed in a consolidated return year shall be treated as an overall foreign loss of such member (rather than the group) and shall be added to such member's separate overall foreign loss account to the extent it reduces United States source income, in accordance with §1.904(f)–1(d)(5). Such overall foreign losses shall be added to the appropriate consolidated overall foreign loss account in later years in accordance with paragraph (b)(1)(iii) of this section.

(3) *Allocation of a portion of overall foreign loss accounts to a member leaving the group*—(i) *Consolidated overall foreign losses.* When a corporation ceases to be a member of an affiliated group filing consolidated returns, a portion of the balance in each applicable consolidated overall foreign loss account shall be allocated to such corporation. The amount allocated to such corporation shall be equal to the amount, if any, in such member's notional overall foreign loss account under the same separate limitation.

(ii) *Overall foreign losses from separate return limitation years.* When a corporation ceases to be a member of an affiliated group filing consolidated returns, it shall take with it the remaining portion of each separate overall foreign loss account for overall foreign losses from separate return limitation years (including amounts added to such accounts under paragraph (c)(2) of this section).

(d) *Recapture of consolidated overall foreign losses.* The amount in any consolidated overall foreign loss account shall be recaptured under §§1.904(f)–1 through 1.904(f)–6 by recharacterizing consolidated foreign source taxable income subject to the separate limitation under which the loss arose as United States source taxable income. For purposes of recapture, consolidated foreign source taxable income subject to the separate limitation under which the loss arose shall be determined in accordance with §§1.904(f)–2 and 1.1502–4. Amounts in a member's excess loss account that are included in income under §1.1502–19 shall be subject to recapture to the extent that they are included in consolidated foreign source taxable income subject to the separate limitation under which the loss arose.

(e) *Dispositions of property between members of the same affiliated group during a consolidated return year*—(1) *In general*. Except as provided in paragraph (2) with respect to overall foreign losses of a selling member from a separate return limitation year, the rules of § 1.1502–13 with respect to intercompany transactions will apply to dispositions of property to which section 904(f)(3)(A) applies.

(2) *Recapture of overall foreign loss from a separate return limitation year*. Paragraph (1) will not apply and gain will be recognized to the extent that the selling member has a balance in its overall foreign loss account from a separate return limitation year unless the selling member adds the entire amount of its overall foreign loss account from separate return limitation years to the applicable consolidated overall foreign loss account and treats such amount as an overall foreign loss incurred in the previous year. Such loss shall be subject to recapture, in accordance with paragraph (d) of § 1.1502–9, beginning in the same year in which it is added to the consolidated overall foreign loss account.

(f) *Illustrations*. The provisions of this section are illustrated by the following examples. All foreign source income or loss in these examples is subject to the general limitation.

Example (1). A, B, and C are the members of an affiliated group of corporations (as defined in section 1504), and all use the calendar year as their taxable year. For 1983, A, B, and C file a consolidated return. ABC has United States source income of $1,000 and foreign source losses (overall foreign loss) of $400. In accordance with paragraph (b)(1)(i) of this section, ABC adds $400 to its consolidated overall foreign loss account at the end of 1983. For 1983, the separate foreign source taxable income (or loss) of A is $400, of B is ($200), and of C is ($600). Under paragraph (c)(1) of this section, B and C must establish separate notional overall foreign loss accounts. Under paragraph (c)(1)(i)(A) of this section, the amount added to each notional account is the pro rata share of the consolidated overall foreign loss of each member contributing to such loss. The pro rata share is determined by multiplying the consolidated loss by the member's proportionate share of the total foreign source losses of all members having such losses. B's foreign source loss if $200 and C's foreign source loss is $600, totaling $800. B must add $400×200/800, or $100, to its notional overall foreign loss account. C must add $400×600/800, or $300, to its notional overall foreign loss account.

Example (2). The facts are the same as in example (1). In 1984, ABC has consolidated foreign source taxable income of $200. Under paragraph (d) of this section and § 1.904(f)–2, ABC is required to recapture $100 of the amount in its consolidated overall foreign loss account, which reduces that account by $100 under paragraph (b)(2)(ii) of this section. In accordance with paragraph (c)(1)(ii) of this section, B reduces its notional account by $100×100/400, or $25, and C reduces it notional account by $100×300/400, or $75. At the end of 1984 ABC has $300 in its consolidated overall foreign loss account, B has $75 in its notional account, and C has $225 in its notional account.

Example (3). D and E are members of an affiliated group and file separate returns using the calendar year as their taxable year for 1980. In 1980, D has an overall foreign loss of $200, which it adds to its overall foreign loss account, and E has no overall foreign losses. For 1981, D and E file a consolidated return, and DE must establish a consolidated overall foreign loss account, to which D's overall foreign loss from 1980 is added under paragraph (b)(1)(ii) of this section. D also adds the same amount $200 to its notional account under paragraph (c)(1)(i)(B) of this section. In 1981, DE has consolidated foreign source taxable income of $300. Since the amount added to the consolidated overall foreign loss account in 1981 is treated as a consolidated overall foreign loss from 1980, DE must recapture $150 in 1981 under paragraph (d) of this section and § 1.904(f)–2. DE's consolidated overall foreign loss account is reduced by $150 under paragraph (b)(2)(ii) of this section, and D's notional account is reduced by $150 under paragraph (c)(1)(ii) of this section, leaving balances of $50 in each of those accounts at the end of 1981.

Example (4). F and G are not members of an affiliated group in 1980, and G has an overall foreign loss of $200, which it adds to its overall foreign loss account. F has no overall foreign loss. On January 1, 1981, F acquires G, and FG files a consolidated return for the calendar year 1981. In 1981, F has no foreign source taxable income or loss, and G has $100 of foreign source taxable income. FG's consolidated foreign source taxable income, $100, minus such income without G's items of income and deduction, $0, is $100. Therefore 50% of that amount, $50, of G's overall foreign loss from its 1980 separate return limitation year is added to FG's consolidated overall foreign loss account under paragraph (b)(1)(iii) of this section, and the same amount is added to G's notional account under paragraph (c)(1)(i)(B) of this section. In accordance with paragraph (d) of this section and § 1.904(f)–2, FG must recapture the $50 balance in its consolidated overall foreign loss account in 1981 because the amount

added from G's separate return limitation year is treated as a 1980 consolidated overall foreign loss. At the end of 1981, FG has a balance of $0 in its consolidated overall foreign loss account, G has $0 in its notional account, and G also has $150 remaining from its 1980 overall foreign loss that has not yet been added to the consolidated overall foreign loss account.

On January 1, 1982, F sells G and G leaves the affiliated group. Under paragraph (c)(3)(i) of this section, G takes with it the balance in its overall foreign loss account from 1980 (its prior separate return limitation year) that has not been added to the consolidated account. G has $150 of overall foreign loss in its overall foreign loss account. Because the amount in the consolidated overall foreign loss account is zero, no amount from that account is allocated to G.

Example (5). (i) In 1982 corporation H has United States source income of $300 and foreign source losses of $500, resulting in a net operating loss of $200 and a balance in H's overall foreign loss account at the end of 1982 of $300.

(ii) On January 1, 1983, H is acquired by J, and for the calendar year 1983 JH files a consolidated return. JH has consolidated taxable income of $700 in 1983, including a consolidated net operating loss deduction of $100. This net operating loss deduction is $100 of H's $200 net operating loss from 1982 (a separate return limitation year), which is limited by § 1.1502–21A(c). For 1983, H has separate taxable income of $100, comprised of $100 of United States source taxable income and zero foreign source taxable income, and J has separate taxable income of $700, comprised of $700 of United States source taxable income and zero foreign source taxable income. Under paragraph (c)(2) of this section, H adds $100 to its separate overall foreign loss account, since that amount of its net operating loss has reduced United States source income. H has $400 in its separate overall foreign loss account at the end of 1983, none of which has been added to a consolidated overall foreign loss account.

(iii) In 1984, H has separate taxable income of $400, comprised of $100 of United States source taxable income and $300 of foreign source taxable income. J has separate taxable income of $900, comprised of $700 of United States source taxable income and $200 of foreign source taxable income. JH has consolidated taxable income of $1200, which includes $100 of consolidated net operating loss deduction from H's 1982 net operating loss. Since this net operating loss deduction is allocated to foreign source income, it does not reduce United States source income and will not be added to an overall foreign loss account. Under paragraph (b)(1)(iii) of this section, $100, from H's overall foreign loss is added to the consolidated overall foreign loss account computed as follows:

Consolidated foreign source taxable income	$400
Consolidated foreign source taxable income recomputed by excluding H's foreign source income and deduction	−200
$200.	
× 50%	$100
Amount from H's separate return limitation year overall foreign loss account added to the consolidated overall foreign loss account	$100

This amount is subject to recapture beginning in the same taxable year, as it is treated as a consolidated overall foreign loss incurred in a previous year. Therefore, under paragraph (d) of this section and § 1.904(f)–2 JH also recaptures this $100, reducing the consolidated overall foreign loss account to $0. H has $300 remaining in its separate overall foreign loss account at the end of 1984.

(iv) In 1985, H has separate taxable income of $400, comprised of $100 of United States source taxable income and $300 of foreign source taxable income. J has separate taxable income of $300 comprised of $600 of United States source taxable income and $300 of foreign source losses. JH has consolidated taxable income of $700, all of which is United States source. Under paragraph (b)(1)(iii) of this section an additional $150 from H's separate overall foreign loss is added to the consolidated overall foreign loss account, computed as follows:

Consolidated foreign source taxable income	$0
Consolidated foreign source taxable income recomputed by excluding H's foreign source income and deductions	−(300)
300.	
× 50%	$150
Amount from H's separate return limitation year overall foreign loss account added to the consolidated overall foreign loss account	$150

Thus, an additional $150 of H's separate overall foreign loss is added to the consolidated overall foreign loss account, and, under paragraph (c)(1)(i)(B) of this section, the same amount is added to J's notional account. While this amount is subject to recapture beginning in the same taxable year, JH has no consolidated foreign source taxable income in 1985, so no overall foreign loss is recaptured. H has a remaining balance of $150 in its separate return limitation year overall foreign loss account and HJ has $150 in its consolidated overall foreign loss account.

Example (6). A, B, and C are members of an affiliated group of corporations (as defined in section 1504), and all use the calendar year as their taxable year. For 1986, A, B, and C file a consolidated return. A has an overall foreign loss account which arose in a separate return limitation year. The amount in the overall foreign loss account is $2,000. A makes a disposition of all its assets to B on January 1, 1986. The gain on the transfer is $1,500, all of which would be recognized under section 904(f)(3). However, if A adds the total

amount of its overall foreign loss from separate return limitation years to ABC's consolidated overall foreign loss account, no gain will be recognized on the transfer until the intercompany gain is taken into account under § 1.1502–13. In the interim, any foreign source gain of the purchasing member (or any other member of the consolidated group) may be used to recapture on a consolidated basis the amount in ABC's consolidated overall foreign loss account.

[T.D. 8153, 52 FR 32005, Aug. 25, 1987; 52 FR 43434, Nov. 12, 1987, as amended by T.D. 8597, 60 FR 36679, July 18, 1995; T.D. 8677, 61 FR 33323, June 27, 1996; T.D. 8766, 63 FR 12643, Mar. 16, 1998; T.D. 8800, 63 FR 71590, Dec. 29, 1998; T.D. 8823, 64 FR 36099, July 2, 1999; Redesignated and amended by T.D. 8833, 64 FR 43615, Aug. 11, 1999; T.D. 8884, 65 FR 33760, May 25, 2000]

REGULATIONS APPLICABLE TO TAXABLE YEARS BEFORE JANUARY 1, 1997

§ 1.1502–15A Limitations on the allowance of built-in deductions for consolidated return years beginning before January 1, 1997.

(a) *Limitation on built-in deductions*—(1) *General rule.* Built-in deductions (as defined in subparagraph (2) of this paragraph) for a taxable year shall be subject to the limitation of § 1.1502–21A(c) (determined without regard to such deductions and without regard to net operating loss carryovers to such year) and the limitation of § 1.1502–22A(c) (determined without regard to such deductions and without regard to capital loss carryovers to such year). If as a result of applying such limitations, built-in deductions are not allowable in such consolidated return year, such deductions shall be treated as a net operating loss or net capital loss (as the case may be) sustained in such year and shall be carried to those taxable years (consolidated or separate) to which a consolidated net operating loss or a consolidated net capital loss could be carried under §§ 1.1502–21A, 1.1502–22A and 1.1502–79A, (or §§ 1.1502-21T and 1.1502-22T, as appropriate) except that such losses shall be treated as losses subject to the limitations contained in §§ 1.1502–21T(c) or 1.1502-22T(c) (or §§ 1.1502-21A(c), 1.1502–22A(c), as appropriate), as the case may be. Thus, for example, if member X sells a capital asset during a consolidated return year at a $1,000 loss and such loss is treated as a built-in deduction, then such loss shall be subject to the limitation contained in § 1.1502–22(c), which, in general, would allow such loss to be offset only against X's own capital gain net income (net capital gain for taxable years beginning before January 1, 1977). Assuming X had no capital gain net income (net capital gain for taxable years beginning before January 1, 1977) reflected in such year (after taking into account its capital losses, other than capital loss carryovers and the built-in deduction), such $1,000 loss shall be treated as a net capital loss and shall be carried over for 5 years under § 1.1502–22, subject to the limitation contained in § 1.1502–22(c) for consolidated return years.

(2) *Built-in deductions.* (i) For purposes of this paragraph, the term ''built-in deductions'' for a consolidated return year means those deductions or losses of a corporation which are recognized in such year, or which are recognized in a separate return year and carried over in the form of a net operating or net capital loss to such year, but which are economically accrued in a separate return limitation year (as defined in § 1.1502–1(f)). Such term does not include deductions or losses incurred in rehabilitating such corporation. Thus, for example, assume P is the common parent of a group filing consolidated returns on the basis of a calendar year and that P purchases all of the stock of S on December 31, 1966. Assume further that on December 31, 1966, S owns a capital asset with an adjusted basis of $100 and a fair market value of $50. If the group files a consolidated return for 1967, and S sells the asset for $30, $50 of the $70 loss is treated as a built-in deduction, since it was economically accrued in a separate return limitation year. If S sells the asset for $80 instead of $30, the $20 loss is treated as a built-in deduction. On the other hand, if such asset is a depreciable asset and is not sold by S, depreciation deductions attributable to the $50 difference between basis and fair market value are treated as built-in deductions.

(ii) In determining, for purposes of subdivision (i) of this subparagraph,

whether a deduction or loss with respect to any asset is economically accrued in a separate return limitation year, the term ''predecessor'' as used in §1.1502–1(f)(1) shall include any transferor of such asset if the basis of the asset in the hands of the transferee is determined (in whole or in part) by reference to its basis in the hands of such transferor.

(3) *Transitional rule.* If the assets which produced the built-in deductions were acquired (either directly or by acquiring a new member) by the group on or before January 4, 1973, and the separate return limitation year in which such deductions were economically accrued ended before such date, then at the option of the taxpayer, the provisions of this paragraph before amendment by T.D. 7246 shall apply, and, in addition, if such assets were acquired on or before April 17, 1968, and the separate return limitation year in which the built-in deductions were economically accrued ended on or before such date, then at the option of the taxpayer, the provisions of §1.1502–31A(b)(9)(as contained in the 26 CFR edition revised as of April 1, 1996) shall apply in lieu of this paragraph.

(4) *Exceptions.* (i) Subparagraphs (1), (2), and (3) of this paragraph shall not limit built-in deductions in a taxable year with respect to assets acquired (either directly or by acquiring a new member) by the group if:

(*a*) The group acquired the assets more than 10 years before the first day of such taxable year, or

(*b*) Immediately before the group acquired the assets, the aggregate of the adjusted basis of all assets (other than cash, marketable securities, and goodwill) acquired from the transferor or owned by the new member did not exceed the fair market value of all such assets by more than 15 percent.

(ii) For purposes of subdivision (i)(*b*) of this subparagraph, a security is not a marketable security if immediately before the group acquired the assets:

(*a*) The fair market value of the security is less than 95 percent of its adjusted basis, or

(*b*) The transferor or new member had held the security for at least 24 months, or

(*c*) The security is stock in a corporation at least 50 percent of the fair market value of the outstanding stock of which is owned by the transferor or new member.

(b) *Effective date.* This section applies to any consolidated return years to which §1.1502–21T does not apply. See §1.1502–21T(g) for effective dates of that section.

[T.D. 6894, 31 FR 11794, Sept. 8, 1966, as amended by T.D. 6909, 31 FR 16695, Dec. 30, 1966; T.D. 7246, 37 FR 761, Jan. 4, 1972; T.D. 7728, 45 FR 72650, Nov. 3, 1980; T.D. 8677, 61 FR 33323, June 27, 1996. Redesignated and amended by T.D. 8677, 61 FR 33326, June 27, 1996]

§1.1502–21A Consolidated net operating loss deduction generally applicable for consolidated return years beginning before January 1, 1997.

(a) *In general.* The consolidated net operating loss deduction shall be an amount equal to the aggregate of the consolidated net operating loss carryovers and carrybacks to the taxable year (as determined under paragraph (b) of this section).

(b) *Consolidated net operating loss carryovers and carrybacks*—(1) *In general.* The consolidated net operating loss carryovers and carrybacks to the taxable year shall consist of any consolidated net operating losses (as determined under paragraph (f) of this section) of the group, plus any net operating losses sustained by members of the group in separate return years, which may be carried over or back to the taxable year under the principles of section 172(b). However, such consolidated carryovers and carrybacks shall not include any consolidated net operating loss apportioned to a corporation for a separate return year pursuant to §1.1502–79A(a), and shall be subject to the limitations contained in paragraphs (c), (d), and (e) of this section and to the limitation contained in §1.1502–15A (or §1.1502–11(c), as appropriate).

(2) *Rules for applying section 172(b)(1)*—(i) *Regulated transportation corporations.* For purposes of applying section 172(b)(1)(C) (relating to net operating losses sustained by regulated transportation corporations), in the case of a consolidated net operating loss sustained in a taxable year for which a

member of the group was a regulated transportation corporation (as defined in section 172(j)(1)), the portion, if any, of such consolidated net operating loss which is attributable to such corporation (as determined under this paragraph shall be a carryover to the sixth taxable year following the loss year only if such corporation is a regulated transportation corporation for such sixth year, and shall be a carryover to the seventh taxable year following the loss year only if such corporation is a regulated transportation corporation for both such sixth and seventh years.

(ii) *Trade expansion losses.* In the case of a carryback of a consolidated net operating loss from a taxable year for which a member of the group has been issued a certification under section 317 of the Trade Expansion Act of 1962 and with respect to which the requirements of section 172(b)(3)(A) have been met, section 172(b)(1)(A)(ii) shall apply only to the portion of such consolidated net operating loss attributable to such member.

(iii) *Foreign expropriation losses.* An election under section 172(b)(3)(C) (relating to 10-year carryover of portion of net operating loss attributable to a foreign expropriation loss) may be made for a consolidated return year only if the sum of the foreign expropriation losses (as defined in section 172(k)) of the members of the group for such year equals or exceeds 50 percent of the consolidated net operating loss for such year. If such election is made, the amount which may be carried over under section 172(b)(1)(D) is the smaller of (*a*) the sum of such foreign expropriation losses, or (*b*) the consolidated net operating loss.

(3) *Absorption rules.* For purposes of determining the amount, if any, of a net operating loss (whether consolidated or separate) which can be carried to a taxable year (consolidated or separate), the amount of such net operating loss which is absorbed in a prior consolidated return year under section 172(b)(2) shall be determined by:

(i) Applying all net operating losses which can be carried to such prior year in the order of the taxable years in which such losses were sustained, beginning with the taxable year which ends earliest, and

(ii) Applying all such losses which can be carried to such prior year from taxable years ending on the same date on a pro rata basis, except that any portion of a net operating loss attributable to a foreign expropriation loss to which section 172(b)(1)(D) applies shall be applied last.

(c) *Limitation on net operating loss carryovers and carrybacks from separate return limitation years*—(1) *General rule.* In the case of a net operating loss of a member of the group arising in a separate return limitation year (as defined in paragraph (f) of §1.1502–1) of such member (and in a separate return limitation year of any predecessor of such member), the amount which may be included under paragraph (b) of this section (computed without regard to the limitation contained in paragraph (d) of this section) in the consolidated net operating loss carryovers and carrybacks to a consolidated return year of the group shall not exceed the amount determined under subparagraph (2) of this paragraph.

(2) *Computation of limitation.* The amount referred to in subparagraph (1) of this paragraph with respect to a member of the group is the excess, if any, of:

(i) Consolidated taxable income (computed without regard to the consolidated net operating loss deduction), minus such consolidated taxable income recomputed by excluding the items of income and deduction of such member, over

(ii) The net operating losses attributable to such member which may be carried to the consolidated return year arising in taxable years ending prior to the particular separate return limitation year.

(3) *Examples.* The provisions of this paragraph and paragraphs (a) and (b) of this section may be illustrated by the following examples:

Example 1. (i) Corporation P formed corporations S and T on January 1, 1965. P, S, and T filed separate returns for the calendar year 1965, a year for which an election under section 1562 was effective. T's return for that year reflected a net operating loss of $10,000. The group filed a consolidated return for 1966 reflecting consolidated taxable income of $30,000 (computed without regard to the consolidated net operating loss deduction).

Among the transactions occurring during 1966 were the following:

(*a*) P sold goods to T deriving deferred profits of $7,000 on such sales, $2,000 of which was restored to consolidated taxable income on the sale of such goods to outsiders;

(*b*) T sold a machine to S deriving a deferred profit of $5,000, $1,000 of which was restored to consolidated taxable income as a result of S's depreciation deductions;

(*c*) T distributed a $3,000 dividend to P; and

(*d*) In addition to the transactions described above, T had other taxable income of $6,000.

(ii) The carryover of T's 1965 net operating loss to 1966 is subject to the limitation contained in this paragraph, since 1965 was a separate return limitation year (an election under section 1562 was effective for such year). Thus, only $7,000 of T's $10,000 net operating loss is a consolidated net operating loss carryover to 1966, since such carryover is limited to consolidated taxable income (computed without regard to the consolidated net operating loss deduction), $30,000, minus such consolidated taxable income recomputed by excluding the items of income and deduction of T, $23,000 (*i.e.,* consolidated taxable income computed without regard to the $1,000 restoration of T's deferred gain and T's $6,000 of other income). In making such recomputation, no change is made in the effect on consolidated taxable income of P's sale to T, or of the dividend from T to P.

Example 2. (i) Corporation P was formed on January 1, 1966. P filed separate returns for the calendar years 1966 and 1967 reflecting net operating losses of $4,000 and $12,000, respectively. P purchased corporation S on March 15, 1967. S was formed on February 1, 1966, and filed a separate return for the taxable year ending January 31, 1967. S also filed a short period return for the period from February 1 to December 31, 1967, and joined with P in filing a consolidated return for 1968. S sustained net operating losses of $5,000 and $6,000 for its taxable years ending January 31, 1967, and December 31, 1967, respectively. An election under section 1562 was not effective for P and S during the period involved. Consolidated taxable income for 1968 (computed without regard to the consolidated net operating loss deduction) was $16,000; such consolidated taxable income recomputed by disregarding the items of income and deduction of S was $9,000.

(ii) In order of time, the following losses are absorbed in 1968:

(*a*) P's $4,000 net operating loss for the calendar year 1966 (such loss is not subject to the limitation contained in this paragraph since P is the common parent corporation for 1968);

(*b*) S's $5,000 net operating loss for the year ended January 31, 1967. Such loss is subject to the limitation contained in this paragraph, since S was not a member of the group on each day of such year. However, such loss can be carried over and absorbed in full since such limitation is $7,000 (consolidated taxable income computed without regard to the consolidated net operating loss deduction, $16,000, minus such consolidated taxable income recomputed, $9,000); and

(*c*) $6,000 of P's net operating loss and $1,000 of S's net operating loss for the taxable years ending December 31, 1967. This is determined by applying the losses from such year which can be carried to 1968 (P's $12,000 loss and $2,000 of S's $6,000 loss, since such $6,000 loss is limited under this paragraph) on a pro rata basis against the amount of such losses which can be absorbed in that year, $7,000 (consolidated taxable income of $16,000 less the $9,000 of losses absorbed from prior years). The carryover of S's loss to 1968 is subject to the limitation contained in that paragraph, since S was not a member of the group on each day of its taxable year ending December 31, 1967. Such loss is limited to $2,000, the excess of $7,000 (as determined under (ii)(*b*)) over $5,000 (S's carryover from the year ended January 31, 1967). If a consolidated return is filed in 1969, the consolidated net operating loss carryovers will consist of P's unabsorbed loss of $6,000 ($12,000 minus $6,000) from 1967 and, subject to the limitation contained in this paragraph, S's unabsorbed loss of $5,000 ($6,000 minus $1,000) from its year ended December 31, 1967.

(d) *Limitation on carryovers where there has been a consolidated return change of ownership*—(1) *General rule.* If a consolidated return change of ownership (as defined in paragraph (g) of § 1.1502–1) occurs during the taxable year or an earlier taxable year, the amount which may be included under paragraph (b) of this section in the consolidated net operating loss carryovers to the taxable year with respect to the aggregate of the net operating losses attributable to old members of the group (as defined in paragraph (g)(3) of § 1.1502–1) arising in taxable years (consolidated or separate) ending on the same day and before the taxable year in which the consolidated return change of ownership occurred shall not exceed the amount determined under subparagraph (2) of this paragraph.

(2) *Computation of limitation.* The amount referred to in subparagraph (1) of this paragraph shall be the excess of:

(i) The consolidated taxable income for the taxable year (determined without regard to the consolidated net operating loss deduction) recomputed by including only the items of income and

deduction of the old members of the group, over

(ii) The sum of the net operating losses attributable to the old members of the group which may be carried to the taxable year arising in taxable years ending prior to the particular loss year or years.

(3) *Example.* The provisions of this paragraph may be illustrated by the following example:

Example. (i) Corporation P is formed on January 1, 1967, and on the same day it forms corporation S. P and S file a consolidated return for the calendar year 1967, reflecting a consolidated net operating loss of $500,000. On January 1, 1968, individual X purchases all of the outstanding stock of P. X subsequently contributes $1,000,000 to P and P purchases the stock of corporation T. P, S, and T file a consolidated return for 1968 reflecting consolidated taxable income of $600,000 (computed without regard to the consolidated net operating loss deduction). Such consolidated taxable income recomputed by including only the items of income and deduction of P and S is $350,000.

(ii) Since a consolidated return change of ownership took place in 1968 (there was more than a 50 percent change of ownership of P), the amount of the consolidated net operating loss from 1967 which can be carried over to 1968 is limited to $350,000, the excess of $350,000 (consolidated taxable income recomputed by including only the items of income and deduction of the old members of the group, P and S) over zero (the amount of the consolidated net operating loss carryovers attributable to the old members of the group arising in taxable years ending before 1967).

(4) *Cross-reference.* See §1.1502–21T(d)(1) for the rule that applies the principles of this paragraph (d) in consolidated return years beginning on or after January 1, 1997, with respect to a consolidated return change of ownership occurring before January 1, 1997.

(e) *Limitations on net operating loss carryovers under section 382*—(1) *Section 382(a).* (i) If at the end of a taxable year (consolidated or separate) there has been an increase in ownership of the stock of the common parent of a group (within the meaning of section 382(a)(1)(A) and (B)), and any member of the group has not continued to carry on a trade or business substantially the same as that conducted before any such increase (within the meaning of section 382(a)(1)(C)), then the portion of any consolidated net operating loss sustained in prior taxable years attributable to such member (as determined under this paragraph shall not be allowed as a carryover to such taxable year or to any subsequent taxable year.

(ii) If the provisions of section 382(a) disallow the deduction of a net operating loss carryover from a separate return year of a member of the group to a subsequent taxable year, no amount shall be included under paragraph (b) of this section as a consolidated net operating loss carryover to such a subsequent consolidated return year with respect to such separate return year of such member.

(iii) The provisions of this subparagraph may be illustrated by the following example:

Example. P, S, and T file a consolidated return for the calendar year 1969, reflecting a consolidated net operating loss attributable in part to each member. P owns 80 percent of S's stock and S owns 80 percent of T's stock. On January 1, 1970, A purchases 50 percent of P's stock. During 1970 T's business is discontinued. Since there has been a 50 percentage point increase in ownership of P, the common parent of the group, and since T has not continued to carry on the same trade or business after such increase, the portion of the 1969 consolidated net operating loss attributable to T shall not be included in any net operating loss deduction for 1970 or for any subsequent taxable years, whether consolidated or separate.

(2) *Section 382(b).* If a net operating loss carryover from a separate return year of a predecessor of a member of the group to the taxable year is reduced under the provisions of section 382(b), the amount included under paragraph (b) of this section with respect to such predecessor shall be so reduced.

(3) *Effective date.* This paragraph (e) disallows or reduces the net operating loss carryovers of a member as a result of a transaction to which old section 382 (as defined in §1.382–2T(f)(21)) applies. See §1.1502–21T(d)(2) for the rule that applies the principles of this paragraph (e) in consolidated return years beginning on or after January 1, 1997, with respect to such a transaction.

(f) *Consolidated net operating loss.* The consolidated net operating loss shall be determined by taking into account the following:

(1) The separate taxable income (as determined under §1.1502–12) of each

member of the group, computed without regard to any deduction under section 242;

(2) Any consolidated capital gain net income (net capital gain for taxable years beginning before January 1, 1977);

(3) Any consolidated section 1231 net loss;

(4) Any consolidated charitable contributions deduction;

(5) Any consolidated dividends received deduction (determined under § 1.1502–26 without regard to paragraph (a)(2) of that section); and

(6) Any consolidated section 247 deduction (determined under § 1.1502–27 without regard to paragraph (a)(1)(ii) of that section).

(g) *Groups that include insolvent financial institutions.* For rules applicable to relinquishing the entire carryback period with respect to losses attributable to insolvent financial institutions, see § 301.6402–7 of this chapter.

(h) *Effective date.* Except as provided in § 1.1502–21T (d)(1), (d)(2), and (g)(3), this section applies to consolidated return years beginning before January 1, 1997.

[T.D. 6894, 31 FR 11794, Sept. 8, 1966, as amended by T.D. 7728, 45 FR 72650, Nov. 3, 1980; T.D. 8387, 56 FR 67489, Dec. 31, 1991; T.D. 8446, 57 FR 53034, Nov. 6, 1992; T.D. 8677, 61 FR 33323, June 27, 1996. Redesignated and amended by T.D. 8677, 61 FR 33328, June 27, 1996]

§ 1.1502–22A Consolidated net capital gain or loss generally applicable for consolidated return years beginning before January 1, 1997.

(a) *Computation*—(1) *Consolidated capital gain net income.* The consolidated capital gain net income (net capital gain for taxable years beginning before January 1, 1977) for the taxable year shall be determined by taking into account:

(i) The aggregate of the capital gains and losses (determined without regard to gains or losses to which section 1231 applies or net capital loss carryovers or carrybacks) of the members of the group for the consolidated return year,

(ii) The consolidated section 1231 net gain for such year (computed in accordance with §§ 1.1502–23A or 1.1502–23T), and

(iii) The consolidated net capital loss carryovers or carrybacks to such year (as determined under paragraph (b) of this section).

(2) *Consolidated net capital loss.* The consolidated net capital loss shall be determined under subparagraph (1) of this paragraph but without regard to subdivision (iii) thereof.

(3) *Special rules.* For purposes of this section, capital gains and losses on intercompany transactions and transactions with respect to stock, bonds, and other obligations of a member of the group shall be reflected as provided in §§ 1.1502–13, and 1.1502–19, and capital losses shall be limited as provided in §§ 1.1502–15A and 1.1502-11(c).

(4) [Reserved]

(5) *Example.* The provisions of this paragraph may be illustrated by the following example:

Example. (i) Corporations P, S, and T file consolidated returns on a calendar year basis for 1966 and 1967. The members had the following transactions involving capital assets during 1967: P sold an asset with a $10,000 basis to S for $17,000 and none of the circumstances of restoration described in § 1.1502–13 occurred by the end of the consolidated return year; S sold an asset to individual A for $7,000 which S had purchased during 1966 from P for $10,000, and with respect to which P had deferred a gain of $2,000; T sold an asset with a basis of $10,000 to individual B for $25,000. The group has a consolidated net capital loss carryover to the taxable year of $10,000.

(ii) The consolidated net capital gain of the group is $4,000, determined as follows: P's net capital gain of $2,000, representing the deferred gain on the sale to S during the taxable year 1966, restored into income during taxable year 1967 (the $7,000 gain on P's deferred intercompany transaction is not taken into account for the current year), plus T's net capital gain of $15,000, minus S's net capital loss of $3,000 and the consolidated net capital loss carryover of $10,000.

(b) *Consolidated net capital loss carryovers and carrybacks*—(1) *In general.* The consolidated net capital loss carryovers and carrybacks to the taxable year shall consist of any consolidated net capital losses of the group, plus any net capital losses of members of the group arising in separate return years of such members, which may be carried to the taxable year under the principles of section 1212(a). However, such consolidated carryovers and carrybacks shall not include any consolidated net capital loss apportioned

to a corporation for a separate return year pursuant to §1.1502–79A(b) (or §1.1502–22T(b), as appropriate) and shall be subject to the limitations contained in paragraphs (c) and (d) of this section. For purposes of section 1212(a)(1), the portion of any consolidated net capital loss for any taxable year attributable to a foreign expropriation capital loss is the amount of the foreign expropriation capital losses of all the members for such year (but not in excess of the consolidated net capital loss for such year).

(2) *Absorption rules.* For purposes of determining the amount, if any, of a net capital loss (whether consolidated or separate) which can be carried to a taxable year (consolidated or separate), the amount of such net capital loss which is absorbed in a prior consolidated return year under section 1212(a)(1) shall be determined by:

(i) Applying all net capital losses which can be carried to such prior year in the order of the taxable years in which such losses were sustained, beginning with the taxable year which ends earliest, and

(ii) Applying all such losses which can be carried to such prior year from taxable years ending on the same date on a prorata basis, except that any portion of a net capital loss attributable to a foreign expropriation capital loss to which section 1212(a)(1)(B) applies shall be applied last.

(c) *Limitation on net capital loss carryovers and carrybacks from separate return limitation years*—(1) *General rule.* In the case of a net capital loss of a member of the group arising in a separate return limitation year (as defined in paragraph (f) of §1.1502–1) of such member (and in a separate return limitation year of any predecessor of such member), the amount that may be included under paragraph (b) of this section (computed without regard to the limitation contained in paragraph (d) of this section) shall not exceed the amount determined under subparagraph (2) of this paragraph.

(2) *Computation of limitation.* The amount referred to in subparagraph (1) of this paragraph with respect to a member of the group is the excess, if any, of:

(i) The consolidated capital gain net income (net capital gain for taxable years beginning before January 1, 1977) for the taxable year (computed without regard to any net capital loss carryovers and carrybacks), minus such consolidated capital gain net income (net capital gain for taxable years beginning before January 1, 1977) for the taxable year recomputed by excluding the capital gains and losses and the gains and losses to which section 1231 applies of such member, over

(ii) The net capital losses attributable to such member which can be carried to the taxable year arising in taxable years ending prior to the particular separate return limitation year.

(d) *Limitation on capital loss carryovers where there has been a consolidated return change of ownership*—(1) *General rule.* If a consolidated return change of ownership (as defined in paragraph (g) of §1.1502–1) occurs during the taxable year or an earlier taxable year, the amount which may be included under paragraph (b) of this section in the consolidated net capital loss carryovers to the taxable year with respect to the aggregate of the net capital losses attributable to old members of the group (as defined in paragraph (g)(3) of §1.1502–1) arising in taxable years (consolidated or separate) ending on the same day and before the taxable year in which the consolidated return change of ownership occurred shall not exceed the amount determined under subparagraph (2) of this paragraph.

(2) *Computation of limitation.* The amount referred to in subparagraph (1) of this paragraph shall be the excess of:

(i) The consolidated capital gain net income (net capital gain for taxable years beginning before January 1, 1977) (determined without regard to any net capital loss carryovers for the taxable year) recomputed by including only capital gains and losses and gains and losses to which section 1231 applies of the old members of the group, over

(ii) The aggregate net capital losses attributable to the old members of the group which may be carried to the taxable year arising in taxable years ending prior to the particular loss year or years.

(3) *Cross-reference.* See §1.1502–22T(d) for the rule that applies the principles

of this paragraph (d) in consolidated return years beginning on or after January 1, 1997, with respect to a consolidated return change of ownership occurring before January 1, 1997.

(e) *Effective date.* This section applies to any consolidated return years to which §1.1502–21T(g) does not apply. See §1.1502–21T(g) for effective dates of that section.

[T.D. 6894, 31 FR 11794, Sept. 8, 1966, as amended by T.D. 7728, 45 FR 72650, Nov. 3, 1980; T.D. 8597, 60 FR 36679, July 18, 1995; T.D. 8677, 33323, June 27, 1996. Redesignated and amended by T.D. 8677, 61 FR 33333, June 27, 1996]

§1.1502–23A Consolidated net section 1231 gain or loss generally applicable for consolidated return years beginning before January 1, 1997.

(a) The consolidated section 1231 net gain or loss for the taxable year shall be determined by taking into account the aggregate of the gains and losses to which section 1231 applies of the members of the group for the consolidated return year. Section 1231 gains and losses on intercompany transactions shall be reflected as provided in §1.1502–13. Section 1231 losses that are ''built-in deductions'' shall be subject to the limitations of §§1.1502–21A(c) and 1.1502–22A(c), as provided in §1.1502–15A(a) (or §1.1502–21T(c) in effect prior to June 25, 1999, as contained in 26 CFR part 1 revised April 1, 1999, and 1.1502–22T(c) in effect prior to June 25, 1999, as contained in 26 CFR part 1 revised April 1, 1999, as provided in 1.1502–15T(a) in effect prior to June 25, 1999, as contained in 26 CFR part 1 revised April 1, 1999) or (1.1502–21(c) and 1.1502–22(c), as provided in 1.1502–15(a), as applicable), as appropriate).

(b) *Effective date.* This section applies to any consolidated return years to which §1.1502–21(h) or 1.1502–21T(g) in effect prior to June 25, 1999, as contained in 26 CFR part 1 revised April 1, 1999, as applicable does not apply. See §1.1502–21(h) or 1.1502–21T(g) in effect prior to June 25, 1999, as contained in 26 CFR part 1 revised April 1, 1999, as applicable for effective dates of these sections.

[T.D. 7246, 38 FR 763, Jan. 4, 1973, as amended by T.D. 8677, 33323, June 27, 1996. Redesignated and amended by T.D. 8677, 61 FR 33334, June 27, 1996; T.D. 8823, 64 FR 36099, July 2, 1999]

§1.1502–41A Determination of consolidated net long-term capital gain and consolidated net short-term capital loss generally applicable for consolidated return years beginning before January 1, 1997.

(a) *Consolidated net long-term capital gain.* The consolidated net long-term capital gain shall be determined by taking into account (1) those gains and losses to which §1.1502–22A(a) applies which are treated as long term under section 1222, and (2) the consolidated section 1231 net gain (computed in accordance with §1.1502–23A).

(b) *Consolidated net short-term capital loss.* The consolidated net short-term capital loss shall be determined by taking into account (1) those gains and losses to which §1.1502–22A(a) applies which are treated as short term under section 1222, and (2) the consolidated net capital loss carryovers and carrybacks to the taxable year (as determined under §1.1502–22A(b)).

(c) *Effective date.* This section applies to any consolidated return years to which §1.1502–21(h) or 1.1502–21T(g) in effect prior to June 25, 1999, as contained in 26 CFR part 1 revised April 1, 1999, as applicable does not apply. See §1.1502–21(h) or 1.1502–21T(g) in effect prior to June 25, 1999, as contained in 26 CFR part 1 revised April 1, 1999, as applicable for effective dates of these sections.

[T.D, 6894, 31 FR 11794, Sept. 8, 1966, as amended by T.D. 8677, 61 FR 33323, June 27, 1996. Redesignated and amended by T.D. 8677, 61 FR 33334, June 27, 1996; T.D. 8823, 64 FR 36099, 36100, July 2, 1999]

REGULATIONS APPLICABLE TO TAXABLE YEARS BEGINNING BEFORE JUNE 28, 2002

§1.1502–77A Common parent agent for subsidiaries applicable for consolidated return years beginning before June 28, 2002.

(a) *Scope of agency of common parent corporation.* The common parent, for all

purposes (other than the making of the consent required by paragraph (a)(1) of § 1.1502–75, the making of an election under section 936(e), the making of an election to be treated as a DISC under § 1.992–2, and a change of the annual accounting period pursuant to paragraph (b)(3)(ii) of § 1.991–1) shall be the sole agent for each subsidiary in the group, duly authorized to act in its own name in all matters relating to the tax liability for the consolidated return year. Except as provided in the preceding sentence, no subsidiary shall have authority to act for or to represent itself in any such matter. For example, any election available to a subsidiary corporation in the computation of its separate taxable income must be made by the common parent, as must any change in an election previously made by the subsidiary corporation; all correspondence will be carried on directly with the common parent; the common parent shall file for all extensions of time including extensions of time for payment of tax under section 6164; notices of deficiencies will be mailed only to the common parent, and the mailing to the common parent shall be considered as a mailing to each subsidiary in the group; notice and demand for payment of taxes will be given only to the common parent and such notice and demand will be considered as a notice and demand to each subsidiary; the common parent will file petitions and conduct proceedings before the Tax Court of the United States, and any such petition shall be considered as also having been filed by each such subsidiary. The common parent will file claims for refund or credit, and any refund will be made directly to and in the name of the common parent and will discharge any liability of the Government in respect thereof to any such subsidiary; and the common parent in its name will give waivers, give bonds, and execute closing agreements, offers in compromise, and all other documents, and any waiver or bond so given, or agreement, offer in compromise, or any other document so executed, shall be considered as having also been given or executed by each such subsidiary. Notwithstanding the provisions of this paragraph, any notice of deficiency, in respect of the tax for a consolidated return year, will name each corporation which was a member of the group during any part of such period (but a failure to include the name of any such member will not affect the validity of the notice of deficiency as to the other members); any notice and demand for payment will name each corporation which was a member of the group during any part of such period (but a failure to include the name of any such member will not affect the validity of the notice and demand as to the other members); and any levy, any notice of a lien, or any other proceeding to collect the amount of any assessment, after the assessment has been made, will name the corporation from which such collection is to be made. The provisions of this paragraph shall apply whether or not a consolidated return is made for any subsequent year, and whether or not one or more subsidiaries have become or have ceased to be members of the group at any time. Notwithstanding the provisions of this paragraph, the Commissioner may, upon notifying the common parent, deal directly with any member of the group in respect of its liability, in which event such member shall have full authority to act for itself.

(b) *Notification of deficiency to corporation which has ceased to be a member of the group.* If a subsidiary has ceased to be a member of the group and if such subsidiary files written notice of such cessation with the Commissioner, then the Commissioner upon request of such subsidiary will furnish it with a copy of any notice of deficiency in respect of the tax for a consolidated return year for which it was a member and a copy of any notice and demand for payment of such deficiency. The filing of such written notification and request by a corporation shall not have the effect of limiting the scope of the agency of the common parent provided for in paragraph (a) of this section and a failure by the Commissioner to comply with such written request shall not have the effect of limiting the tax liability of such corporation provided for in § 1.1502–6.

(c) *Effect of waiver given by common parent.* Unless the Commissioner agrees to the contrary, an agreement entered into by the common parent extending

the time within which an assessment may be made or levy or proceeding in court begun in respect of the tax for a consolidated return year shall be applicable:

(1) To each corporation which was a member of the group during any part of such taxable year, and

(2) To each corporation the income of which was included in the consolidated return for such taxable year, notwithstanding that the tax liability of any such corporation is subsequently computed on the basis of a separate return under the provisions of § 1.1502–75.

(d) *Effect of dissolution of common parent corporation*. If the common parent corporation contemplates dissolution, or is about to be dissolved, or if for any other reason its existence is about to terminate, it shall forthwith notify the Commissioner of such fact and designate, subject to the approval of the Commissioner, another member to act as agent in its place to the same extent and subject to the same conditions and limitations as are applicable to the common parent. If the notice thus required is not given by the common parent, or the designation is not approved by the Commissioner, the remaining members may, subject to the approval of the Commissioner, designate another member to act as such agent, and notice of such designation shall be given to the Commissioner. Until a notice in writing designating a new agent has been approved by the Commissioner, any notice of deficiency or other communication mailed to the common parent shall be considered as having been properly mailed to the agent of the group; or, if the Commissioner has reason to believe that the existence of the common parent has terminated, he may, if he deems it advisable, deal directly with any member in respect of its liability.

(e) *General rules*—(1) *Scope*. This section applies if the corporation that is the common parent of the group ceases to be the common parent, whether or not the group remains in existence under § 1.1502–75(d).

(2) *Notice of deficiency*. A notice of deficiency mailed to any one or more corporations referred to in paragraph (e)(4) of this section is deemed for purposes of § 1.1502–77A to be mailed to the agent of the group. If the group has designated an agent that has been approved by the Commissioner under § 1.1502–77A(d), a notice of deficiency shall be mailed to that designated agent in addition to any other corporation referred to in paragraph (e)(4) of this section. However, failure by the Commissioner to mail a notice of deficiency to that designated agent shall not invalidate the notice of deficiency mailed to any other corporation referred to in paragraph (e)(4) of this section.

(3) *Waiver of statute of limitations*. A waiver of the statute of limitations with respect to the group given by any one or more corporations referred to in paragraph (e)(4) of this section is deemed to be given by the agent of the group.

(4) *Alternative agents*. The corporations referred to in paragraph (e) (2) and (3) of this section are—

(i) The common parent of the group for all or any part of the year to which the notice or waiver applies,

(ii) A successor to the former common parent in a transaction to which section 381(a) applies,

(iii) The agent designated by the group under § 1.1502–77A(d), or

(iv) If the group remains in existence under § 1.1502–75(d) (2) or (3), the common parent of the group at the time the notice is mailed or the waiver given.

(f) *Cross-reference*. For further rules applicable to groups that include insolvent financial institutions, see § 301.6402–7 of this chapter.

(g) *Effective/applicability dates*. This section applies to taxable years beginning before June 28, 2002, except paragraph (e) of this section applies to statutory notices and waivers of the statute of limitations for taxable years for which the due date (without extensions) of the consolidated return is after September 7, 1988, and which begin before June 28, 2002.

[T.D. 6894, 31 FR 11794, Sept. 8, 1966, as amended by T.D. 7323, 39 FR 34409, Sept. 25, 1974; T.D. 7673, 45 FR 8588, Feb. 8, 1980; T.D. 8226, 53 FR 34733, Sept. 8, 1988; T.D. 8446, 57 FR 53034, Nov. 6, 1992. Redesignated and amended by T.D. 9002, 67 FR 43540, 43544, June 28, 2002; T.D. 9715, 80 FR 17318, Apr. 1, 2015]

REGULATIONS APPLICABLE TO TAXABLE YEARS BEGINNING ON OR AFTER JUNE 28, 2002, AND BEFORE APRIL 1, 2015

§ 1.1502–77B Agent for the group applicable for consolidated return years beginning on or after June 28, 2002, and before April 1, 2015.

(a) *Scope of agency*—(1) *In general*—(i) *Common parent*. Except as provided in paragraphs (a)(3) and (6) of this section, the common parent (or a substitute agent described in paragraph (a)(1)(ii) of this section) for a consolidated return year is the sole agent (agent for the group) that is authorized to act in its own name with respect to all matters relating to the tax liability for that consolidated return year, for—

(A) Each member in the group; and

(B) Any successor (see paragraph (a)(1)(iii) of this section) of a member.

(ii) *Substitute agents*. For purposes of this section, any corporation designated as a substitute agent pursuant to paragraph (d) of this section to replace the common parent or a previously designated substitute agent acts as agent for the group to the same extent and subject to the same limitations as are applicable to the common parent, and any reference in this section to the common parent includes any such substitute agent.

(iii) *Successor*. For purposes of this section only, the term *successor* means an individual or entity (including a disregarded entity) that is primarily liable, pursuant to applicable law (including, for example, by operation of a state or Federal merger statute), for the tax liability of a member of the group. Such determination is made without regard to § 1.1502–1(f)(4) or 1.1502–6(a). (For inclusion of a successor in references to a subsidiary or member, see paragraph (c)(2) of this section.)

(iv) *Disregarded entity*. If a subsidiary of a group becomes, or its successor is or becomes, a disregarded entity for Federal tax purposes, the common parent continues to serve as the agent with respect to that subsidiary's tax liability under § 1.1502–6 for consolidated return years during which it was included in the group, even though the entity generally is not treated as a person separate from its owner for Federal tax purposes.

(v) *Transferee liability*. For purposes of assessing, paying and collecting transferee liability, any exercise of or reliance on the common parent's agency authority pursuant to this section is binding on a transferee (or subsequent transferees) of a member, regardless of whether the member's existence terminates prior to such exercise or reliance.

(vi) *Purported common parent*. If any corporation files a consolidated return purporting to be the common parent of a consolidated group but is subsequently determined not to have been the common parent of the claimed group, that corporation is treated, to the extent necessary to avoid prejudice to the Commissioner, as if it were the common parent.

(2) *Examples of matters subject to agency*. With respect to any consolidated return year for which it is the common parent—

(i) The common parent makes any election (or similar choice of a permissible option) that is available to a subsidiary in the computation of its separate taxable income, and any change in an election (or similar choice of a permissible option) previously made by or for a subsidiary, including, for example, a request to change a subsidiary's method or period of accounting;

(ii) All correspondence concerning the income tax liability for the consolidated return year is carried on directly with the common parent;

(iii) The common parent files for all extensions of time, including extensions of time for payment of tax under section 6164, and any extension so filed is considered as having been filed by each member;

(iv) The common parent gives waivers, gives bonds, and executes closing agreements, offers in compromise, and all other documents, and any waiver or bond so given, or agreement, offer in compromise, or any other document so executed, is considered as having also been given or executed by each member;

(v) The common parent files claims for refund, and any refund is made directly to and in the name of the common parent and discharges any liability of the Government to any member with respect to such refund;

(vi) The common parent takes any action on behalf of a member of the group with respect to a foreign corporation, for example, elections by, and changes to the method of accounting of, a controlled foreign corporation in accordance with § 1.964–1(c)(3);

(vii) Notices of claim disallowance are mailed only to the common parent, and the mailing to the common parent is considered as a mailing to each member;

(viii) Notices of deficiencies are mailed only to the common parent (except as provided in paragraph (b) of this section), and the mailing to the common parent is considered as a mailing to each member;

(ix) Notices of final partnership administrative adjustment under section 6223 with respect to any partnership in which a member of the group is a partner may be mailed to the common parent, and, if so, the mailing to the common parent is considered as a mailing to each member that is a partner entitled to receive such notice (for other rules regarding partnership proceedings, see paragraphs (a)(3)(v) and (a)(6)(iii) of this section);

(x) The common parent files petitions and conducts proceedings before the United States Tax Court, and any such petition is considered as also having been filed by each member;

(xi) Any assessment of tax may be made in the name of the common parent, and an assessment naming the common parent is considered as an assessment with respect to each member; and

(xii) Notice and demand for payment of taxes is given only to the common parent, and such notice and demand is considered as a notice and demand to each member.

(3) *Matters reserved to subsidiaries.* Except as provided in this paragraph (a)(3) and paragraph (a)(6) of this section, no subsidiary has authority to act for or to represent itself in any matter related to the tax liability for the consolidated return year. The following matters, however, are reserved exclusively to each subsidiary—

(i) The making of the consent required by § 1.1502–75(a)(1);

(ii) Any action with respect to the subsidiary's liability for a federal tax other than the income tax imposed by chapter 1 of the Internal Revenue Code (including, for example, employment taxes under chapters 21 through 25 of the Internal Revenue Code, and miscellaneous excise taxes under chapters 31 through 47 of the Internal Revenue Code);

(iii) The making of an election under section 936(e);

(iv) The making of an election to be treated as a DISC under § 1.992–2; and

(v) Any actions by a subsidiary acting as tax matters partner under sections 6221 through 6234 and the accompanying regulations (but see paragraph (a)(2)(ix) of this section regarding the mailing of a final partnership administrative adjustment to the common parent).

(4) *Term of agency*—(i) *In general.* Except as provided in paragraph (a)(4)(iii) of this section, the common parent for the consolidated return year remains the agent for the group with respect to that year until the common parent's existence terminates, regardless of whether one or more subsidiaries in that year cease to be members of the group, whether the group files a consolidated return for any subsequent year, whether the common parent ceases to be the common parent or a member of the group in any subsequent year, or whether the group continues pursuant to § 1.1502–75(d) with a new common parent in any subsequent year.

(ii) *Replacement of substitute agent designated by Commissioner.* If the Commissioner replaces a previously designated substitute agent pursuant to paragraph (d)(3)(ii) of this section, the replaced substitute agent ceases to be the agent after the Commissioner designates another substitute agent.

(iii) *New common parent after a group structure change.* If the group continues in existence with a new common parent pursuant to § 1.1502–75(d) during a consolidated return year, the common parent at the beginning of the year is the agent for the group through the date of

the § 1.1502–75(d) transaction, and the new common parent becomes the agent for the group beginning the day after the transaction, at which time it becomes the agent for the group with respect to the entire consolidated return year (including the period through the date of the transaction) and the former common parent is no longer the agent for that year.

(5) *Identifying members in notice of a lien.* Notwithstanding any other provisions of this paragraph (a), any notice of a lien, any levy or any other proceeding to collect the amount of any assessment, after the assessment has been made, must name the entity from which such collection is to be made.

(6) *Direct dealing with a member*—(i) *Several liability.* The Commissioner may, upon issuing to the common parent written notice that expressly invokes the authority of this provision, deal directly with any member of the group with respect to its liability under § 1.1502–6 for the consolidated tax of the group, in which event such member has sole authority to act for itself with respect to that liability. However, if the Commissioner believes or has reason to believe that the existence of the common parent has terminated, he may, if he deems it advisable, deal directly with any member with respect to that member's liability under § 1.1502–6 without giving the notice required by this provision.

(ii) *Information requests.* The Commissioner may, upon informing the common parent, request information relevant to the consolidated tax liability from any member of the group. However, if the Commissioner believes or has reason to believe that the existence of the common parent has terminated, he may request such information from any member of the group without informing the common parent.

(iii) *Members as partners in partnerships.* The Commissioner generally will deal directly with any member in its capacity as a partner of a partnership that is subject to the provisions of sections 6221 through 6234 and the accompanying regulations (but see paragraph (a)(2)(ix) of this section regarding the mailing of a final partnership administrative adjustment to the common parent). However, if requested to do so in accordance with the provisions of § 301.6223(c)–1(b) of this chapter, the Commissioner may deal with the common parent as agent for such member on any matter related to the partnership, except in regards to a settlement under section 6224(c) and except to the extent the member acts as tax matters partner of the partnership.

(b) *Copy of notice of deficiency to entity that has ceased to be a member of the group.* An entity that ceases to be a member of the group during or after a consolidated return year may file a written notice of that fact with the Commissioner and request a copy of any notice of deficiency with respect to the tax for a consolidated return year during which the entity was a member, or a copy of any notice and demand for payment of such deficiency, or both. Such filing does not limit the scope of the agency of the common parent provided for in paragraph (a) of this section. Any failure by the Commissioner to comply with such request does not limit an entity's tax liability under § 1.1502–6. For purposes of this paragraph (b), references to an entity include a successor of such entity.

(c) *References to member or subsidiary.* For purposes of this section, all references to a member or subsidiary for a consolidated return year include—

(1) Each corporation that was a member of the group during any part of such year (except that any reference to a subsidiary does not include the common parent);

(2) Except as indicated otherwise, a successor (as defined in paragraph (a)(1)(iii) of this section) of any corporation described in paragraph (c)(1) of this section; and

(3) Each corporation whose income was included in the consolidated return for such year, notwithstanding that the tax liability of such corporation should have been computed on the basis of a separate return, or as a member of another consolidated group, under the provisions of § 1.1502–75.

(d) *Termination of common parent*—(1) *Designation of substitute agent by common parent.* (i) If the common parent's existence terminates, it may designate a substitute agent for the group and notify the Commissioner, as provided in this paragraph (d)(1).

(A) Subject to the Commissioner's approval under paragraph (d)(1)(ii) of this section, before the common parent's existence terminates, the common parent may designate, for each consolidated return year for which it is the common parent and for which the period of limitations either for assessment, for collection after assessment, or for claiming a credit or refund has not expired, one of the following to act as substitute agent in its place—

(*1*) Any corporation that was a member of the group during any part of the consolidated return year and, except as provided in paragraph (e)(3)(ii) of this section, has not subsequently been disregarded as an entity separate from its owner or reclassified as a partnership for Federal tax purposes; or

(*2*) Any successor (as defined in paragraph (a)(1)(iii) of this section) of such a corporation or of the common parent that is a domestic corporation (and, except as provided in paragraph (e)(3)(ii) of this section, is not disregarded as an entity separate from its owner or classified as a partnership for Federal tax purposes), including a corporation that will become a successor at the time that the common parent's existence terminates.

(B) The common parent must notify the Commissioner in writing (under procedures prescribed by the Commissioner) of the designation and provide the following—

(*1*) An agreement executed by the designated corporation agreeing to serve as the group's substitute agent; and

(*2*) If the designated corporation was not itself a member of the group during the consolidated return year (because the designated corporation is a successor of a member of the group for the consolidated return year), a statement by the designated corporation acknowledging that it is or will be primarily liable for the consolidated tax as a successor of a member.

(ii) A designation under paragraph (d)(1)(i)(A) of this section does not apply unless and until it is approved by the Commissioner. The Commissioner's approval of such a designation is not effective before the existence of the common parent terminates.

(2) *Default substitute agent*. If the common parent fails to designate a substitute agent for the group before its existence terminates and if the common parent has a single successor that is a domestic corporation, such successor becomes the substitute agent for the group upon termination of the common parent's existence. However, see paragraph (d)(4) of this section regarding the consequences of the successor's failure to notify the Commissioner of its status as default substitute agent in accordance with procedures established by the Commissioner.

(3) *Designation by the Commissioner*. (i) In the event the common parent's existence terminates and no designation is made and approved under paragraph (d)(1) of this section and the Commissioner believes or has reason to believe that there is no successor of the common parent that satisfies the requirements of paragraph (d)(2) of this section (or the Commissioner believes or has reason to believe there is such a successor but has no last known address on file for such successor), the Commissioner may, at any time, with or without a request from any member of the group, designate a corporation described in paragraph (d)(1)(i)(A) of this section to act as the substitute agent. The Commissioner will notify the designated substitute agent in writing of its designation, and the designation is effective upon receipt by the designated substitute agent of such notice. The designated substitute agent must give notice of the designation to each corporation that was a member of the group during any part of the consolidated return year, but a failure by the designated substitute agent to notify any such member of the group does not invalidate the designation.

(ii) At the request of any member, the Commissioner may, but is not required to, replace a substitute agent previously designated under paragraph (d)(3)(i) of this section with another corporation described in paragraph (d)(1)(i)(A) of this section.

(4) *Absence of designation or notification of default substitute agent*. Until a designation of a substitute agent for the group under paragraph (d)(1) of this section has become effective, the Commissioner has received notification in

accordance with procedures established by the Commissioner that a successor qualifying under paragraph (d)(2) of this section has become the substitute agent by default, or the Commissioner has designated a substitute agent under paragraph (d)(3) of this section—

(i) Any notice of deficiency or other communication mailed to the common parent, even if no longer in existence, is considered as having been properly mailed to the agent for the group; and

(ii) The Commissioner is not required to act on any communication (including, for example, a claim for refund) submitted on behalf of the group by any person other than the common parent (including a successor of the common parent qualifying as a default substitute agent under paragraph (d)(2) of this section).

(e) *Termination of a corporation's existence*—(1) *In general.* For purposes of paragraphs (a)(1)(v), (a)(4)(i), (d), and (j) of this section, the existence of a corporation is deemed to terminate if—

(i) Its existence terminates under applicable law; or

(ii) Except as provided in paragraph (e)(3) of this section, it becomes, for Federal tax purposes, either—

(A) An entity that is disregarded as an entity separate from its owner; or

(B) An entity that is reclassified as a partnership.

(2) *Purported agency.* If the existence of the agent for the group terminates under circumstances described in paragraph (e)(1)(ii) of this section, until the Commissioner has approved the designation of a substitute agent for the group pursuant to paragraph (d)(1) of this section or the Commissioner designates a substitute agent and notifies the designated substitute agent pursuant to paragraph (d)(3) of this section, any post-termination action by that purported agent on behalf of the group has the same effect, to the extent necessary to avoid prejudice to the Commissioner, as if the agent's corporate existence had not terminated.

(3) *Exceptions where no eligible corporation exists.* (i) For purposes of the common parent's term as agent under paragraph (a)(4)(i) of this section and the term as agent of the substitute agent designated under paragraph (d) of this section, if a corporation either becomes disregarded as an entity separate from its owner or is reclassified as a partnership for Federal tax purposes, its existence is not deemed to terminate if the effect of such termination would be that no corporation remains eligible to serve as the substitute agent for the group's consolidated return year.

(ii) Similarly, for purposes of paragraph (d) of this section, an entity that is either disregarded as an entity separate from its owner or reclassified as a partnership for Federal tax purposes is not precluded from designation as a substitute agent merely because of such classification if the effect of the inability to make such designation would be that no corporation remains eligible to serve as the substitute agent for the group's consolidated return year.

(iii) Any entity described in paragraphs (e)(3)(i) or (ii) of this section that remains or becomes the agent for the group is treated as a corporation for purposes of this section.

(4) *Exception for section 338 transactions.* Notwithstanding section 338(a)(2), a target corporation for which an election is made under section 338 is not deemed to terminate for purposes of this section.

(f) *Examples.* The following examples illustrate the principles of this section. Unless otherwise indicated, each example addresses the question of which corporation is the proper party to execute a consent to waive the statute of limitations for Years 1 and 2 or the more general question of which corporation may be designated as a substitute agent for the group for Years 1 and 2. In each example, as of January 1 of Year 1, the P group consists of P and its two subsidiaries, S and S–1. P, as the common parent of the P group, files consolidated returns for the P group in Years 1 and 2. On January 1 of Year 1, domestic corporations S–2, U, V, W, W–1, X, Y, Z and Z–1 are not related to P or the members of the P group. All corporations are calendar year taxpayers. For none of the tax years at issue does the Commissioner exercise the authority under paragraph (a)(6) of this section to deal with any member separately. Any surviving corporation in a merger is a successor as

described in paragraph (a)(1)(iii) of this section. Any notification to the Commissioner of the designation of the P group's substitute agent also contains a statement signed on behalf of the designated agent that it agrees to act as the group's substitute agent and, in the case of a successor, that it is primarily liable as a successor of a member. The examples are as follows:

Example 1. Disposition of all group members. On December 31 of Year 1, P sells all the stock of S–1 to X. On December 31 of Year 2, P distributes all the stock of S to P's shareholders. P files a separate return for Year 3. Although P is no longer a common parent after Year 2, P remains the agent for the P group for Years 1 and 2. For as long as P remains in existence, only P may execute a waiver of the period of limitations on assessment on behalf of the group for Years 1 and 2.

Example 2. Acquisition of common parent by another group. The facts are the same as in *Example 1,* except on January 1 of Year 3, all of the outstanding stock of P is acquired by Y. P thereafter joins in the Y group consolidated return as a member of Y group. Although P is a member of Y group in Year 3, P remains the agent for the P group for Years 1 and 2. For as long as P remains in existence, only P may execute a waiver of the period of limitations on assessment on behalf of the P group for Years 1 and 2.

Example 3. Merger of common parent—designation of remaining member as substitute agent. On December 31 of Year 1, P sells all the stock of S–1 to X. On July 1 of Year 2, P acquires all the stock of S–2. On November 30 of Year 2, P distributes all the stock of S to P's shareholders. On January 1 of Year 3, P merges into Y corporation. Just before the merger, P notifies the Commissioner in writing of the planned merger and of its designation of S as the substitute agent for the P group for Years 1 and 2. S is the only member that P can designate as the substitute agent for both Years 1 and 2 because it is the only subsidiary that was a member of the P group during part of both years. Although S–2 is the only remaining subsidiary of the P group when P merges into Y, S–2 was a member of the P group only in Year 2. For that reason, S–2 cannot be the substitute agent for the P group for Year 1. Alternatively, P could designate a different substitute agent for each year, selecting S or S–1 as the substitute agent for Year 1, and S or S–2 as the substitute agent for Year 2. P could also designate its successor Y as the substitute agent for both Years 1 and 2.

Example 4. Forward triangular merger of common parent. On January 1 of Year 3, P merges with and into Z–1, a subsidiary of Z, in a forward triangular merger described in section 368(a)(1)(A) and (a)(2)(D). The transaction constitutes a reverse acquisition under §1.1502–75(d)(3)(i) because P's shareholders receive more than 50% of Z's stock in exchange for all of P's stock. Just before the merger, P notifies the Commissioner in writing of the planned merger and its designation of Z–1, the corporation that will survive the planned merger, as the substitute agent of the P group for Years 1 and 2. Because Z–1 will be P's successor (within the meaning of paragraph (a)(1) of this section) after the planned merger, P may designate Z–1 as the substitute agent for the P group for Years 1 and 2, pursuant to paragraph (d)(1) of this section. Alternatively, P could have designated S or S–1 as the substitute agent for the P group for Years 1 and 2. Although Z is the new common parent of the P group, which continues pursuant to §1.1502–75(d)(3)(i), P may not designate Z as the substitute agent for Years 1 and 2 because Z was not a member of the group during any part of Years 1 or 2 and is not a successor of P or any other member of P group.

Example 5. Reverse triangular merger of common parent. On March 1 of Year 3, W–1, a subsidiary of W, merges into P, in a reverse triangular merger described in section 368(a)(1)(A) and (a)(2)(E). P survives the merger with W–1. The transaction constitutes a reverse acquisition under §1.1502–75(d)(3)(i) because P's shareholders receive more than 50% of W's stock in exchange for all of P's stock. Under paragraph (a) of this section, P remains the agent for the P group for Years 1 and 2, even though the P group continues with W as its new common parent pursuant to §1.1502–75(d)(3)(i). Because the transaction constitutes a reverse acquisition, the P group is treated as remaining in existence with W as its common parent. Before March 2 of Year 3, P is the agent for the P group for Year 3. Beginning on March 2 of Year 3, W becomes the agent for the P group with respect to all of Year 3 (including the period through March 1) and subsequent consolidated return years. For as long as P remains in existence, P remains the agent of the P group under paragraph (a) of this section for Years 1 and 2, and therefore only P may execute a waiver of the period of limitations on assessment on behalf of the P group for Years 1 and 2.

Example 6. Reverse triangular merger of common parent-subsequent spinoff of common parent. The facts are the same as in *Example 5,* except that on April 1 of Year 4, in a transaction unrelated to the Year 3 reverse acquisition, P distributes the stock of its subsidiaries S and S–1 to W, and W then distributes the stock of P to the W shareholders. Beginning on March 2 of Year 3, W becomes the agent for the P group with respect to Year 3 (including the period through March 1) and subsequent consolidated return years. Although P is no longer a member of the P

group after the Year 4 spinoff, P remains the agent for the P group under paragraph (a) of this section for Years 1 and 2. Thus, for as long as P remains in existence, only P may execute a waiver of the period of limitations on assessment on behalf of the P group for Years 1 and 2.

Example 7. Qualified stock purchase and section 338 election. On March 31 of Year 2, V purchases the stock of P in a qualified stock purchase (within the meaning of section 338(d)(3)), and V makes a timely election pursuant to section 338(g) with respect to P. Although section 338(a)(2) provides that P is treated as a new corporation as of the beginning of the day after the acquisition date for purposes of subtitle A, paragraph (e)(4) of this section provides that P's existence is not deemed to terminate for purposes of this section notwithstanding the general rule of section 338(a)(2). Therefore, the election under section 338(g) does not result in a termination of P under paragraph (e) of this section, and new P remains the agent of the P group for Year 1 and the period ending March 31 of Year 2 (short Year 2). For as long as new P remains in existence, only new P may execute a waiver of the period of limitations on assessment on behalf of the P group for Year 1 and short Year 2.

Example 8. Fraudulent conveyance of assets. On March 15 of Year 2, P files a consolidated return that includes the income of S and S–1 for Year 1. On December 1 of Year 2, S–1 transfers assets having a fair market value of $100x to U in exchange for $10x. This transfer of assets for less than fair market value constitutes a fraudulent conveyance under applicable state law. On March 1 of Year 5, P executes a waiver extending to December 31 of Year 6 the period of limitations on assessment with respect to the group's Year 1 consolidated return. On February 1 of Year 6, the Commissioner issues a notice of deficiency to P asserting a deficiency of $30x for the P group's Year 1 consolidated tax liability. P does not file a petition for redetermination in the Tax Court, and the Commissioner makes a timely assessment against the P group. P, S and S–1 are all insolvent and are unable to pay the deficiency. On February 1 of Year 8, the Commissioner sends a notice of transferee liability to U, which does not file a petition in the Tax Court. On August 1 of Year 8, the Commissioner assesses the amount of the P group's deficiency against U. Under section 6901(c), the Commissioner may assess U's transferee liability within one year after the expiration of the period of limitations against the transferor S–1. By operation of section 6213(a) and 6503(a), the issuance of the notice of deficiency to P and the expiration of the 90-day period for filing a petition in the Tax Court have the effect of further extending by 150 days the P group's limitations period on assessment from the previously extended date of December 31 of Year 6 to May 30 of Year 7. Pursuant to paragraph (a)(1)(v) of this section, the waiver executed by P on March 1 of Year 5 to extend the period of limitations on assessment to December 31 of Year 6 and the further extension of the P group's limitations period to May 30 of Year 7 (by operation of sections 6213(a) and 6503(a)) have the derivative effect of extending the period of limitations on assessment of U's transferee liability to May 30 of Year 8. By operation of section 6901(f), the issuance of the notice of transferee liability to U and the expiration of the 90-day period for filing a petition in the Tax Court have the effect of further extending the limitations period on assessment of U's liability as a transferee by 150 days, from May 30 of Year 8 to October 27 of Year 8. Accordingly, the Commissioner may send a notice of transferee liability to U at any time on or before May 30 of Year 8 and assess the unpaid liability against U at any time on or before October 27 of Year 8. The result would be the same even if S–1 ceased to exist before March 1 of Year 5, the date P executed the waiver.

(g) *Cross-reference.* For further rules applicable to groups that include insolvent financial institutions, see § 301.6402–7 of this chapter.

(h) *Effective/applicability date*—(1) *Application*—(i) *In general.* This section applies to consolidated return years beginning on or after June 28, 2002, and before April 1, 2015. For instructions regarding communications relating to the determination of a substitute agent and other matters under this section, see Rev. Proc. 2002–43, 2002–2 CB 99 (see § 601.601(d)(2)(ii)(*b*) of this chapter). For rules governing the resignation of certain agents for the group subject to this section, see § 1.1502–77(c)(7) and (j)(2).

(ii) *Election to apply for prior taxable years.* Notwithstanding paragraphs (h)(1)(i) and (h)(2) of this section, the common parent may elect to apply paragraph (d)(1) of this section in lieu of § 1.1502–77A(d) in designating a substitute agent for taxable years beginning before June 28, 2002. The common parent makes such an election by expressly referring to the election under this paragraph (h)(1)(ii) in notifying the Commissioner of the designation of the substitute agent. Once made, such election applies to any subsequent designation of a substitute agent for the consolidated return year(s) subject to the election.

(2) *Prior law*. For taxable years beginning before June 28, 2002, see § 1.1502–77A.

(3) *Designation of a domestic substitute agent*—(i) *In general*. The provisions of paragraphs (e)(1) and (j) of this section apply to taxable years for which the consolidated Federal income tax return is due (without extensions) after July 23, 2007.

(ii) *Prior law*. For taxable years for which the consolidated Federal income tax return is due (without extensions) on or before July 23, 2007, see § 1.1502–77(e)(1) as contained in the 26 CFR part 1 edition revised as of April 1, 2007. For taxable years for which the consolidated Federal income tax return is due (without extensions) after March 14, 2006, and on or before July 23, 2007, see § 1.1502–77T as contained in the 26 CFR part 1 edition revised as of April 1, 2007.

(i) [Reserved]

(j) *Designation by Commissioner if common parent is treated as a domestic corporation under section 7874 or section 953(d)*—(1) *In general*. If the common parent is an entity created or organized under the law of a foreign country and is treated as a domestic corporation by reason of section 7874 (or regulations under that section) or a section 953(d) election (a foreign common parent), the Commissioner may at any time, with or without a request from any member of the group, designate another member of the group to act as the agent for the group (a domestic substitute agent) for any taxable year for which the consolidated Federal income tax return is due (without extensions) after July 23, 2007, and the foreign common parent would otherwise be the agent for the group. For each such year, the domestic substitute agent will be the sole agent for the group even though the foreign common parent remains in existence. The foreign common parent ceases to be the agent for the group when the Commissioner's designation of a domestic substitute agent becomes effective. The Commissioner may designate a domestic substitute agent for the term of a single taxable year, multiple years, or on a continuing basis.

(2) *Domestic substitute agent*. The domestic substitute agent, by designation or by succession, shall be a domestic corporation described in paragraph (d)(1)(i)(A) of this section (determined without regard to section 7874, a section 953(d) election or section 1504(d)).

(3) *Designation by the Commissioner*. The Commissioner will notify the domestic substitute agent in writing by mail or faxed transmission of the designation. The domestic substitute agent's designation is effective on the earliest of the 14th day following the date of a mailing, the 4th day following a faxed transmission, or the date the Commissioner receives written confirmation of the designation by a duly authorized officer of the domestic substitute agent (within the meaning of section 6062). The domestic substitute agent must give notice of its designation to the foreign common parent and each corporation that was a member of the group during any part of any consolidated return year for which the domestic substitute agent will be the agent. A failure of the domestic substitute agent to notify the foreign common parent or any member of the group does not invalidate the designation. The Commissioner will send a copy of the notification to the foreign common parent, and if applicable, to any domestic substitute agent the designation replaces; a failure to send a copy of the notification does not invalidate the designation.

(4) *Term of agency*—(i) *Taxable years for which domestic substitute agent is the agent*. If the Commissioner designates a domestic substitute agent for one or more taxable years, unless the designation is expressly limited to such term, such domestic substitute agent will continue as the group's sole agent for subsequent taxable years until the domestic substitute agent ceases to be a member of the continuing group, is replaced by a new domestic common parent (as provided in paragraph (j)(4)(iv)(A) of this section), is replaced by the Commissioner, or is replaced by a default substitute agent (as provided in paragraph (j)(5)(ii) of this section). If during the course of a consolidated return year the domestic substitute agent ceases to be a member of the continuing group or is replaced, it shall no longer act as agent for such taxable year or subsequent taxable years in any matter.

(ii) *Continuing agency for prior taxable years.* Unless replaced by a default substitute agent (as provided in paragraph (j)(5)(ii) of this section) or by the Commissioner, the domestic substitute agent at the end of a taxable year of the group will remain the agent for such year until its existence terminates, even if the group subsequently ceases to exist or the domestic substitute agent subsequently ceases to be a member of the group.

(iii) *Replacement of a § 1.1502–77(d)(1) agent.* If, pursuant to paragraph (d)(1) of this section, the common parent of the group designates a foreign common parent as the agent for the group for any taxable year, the Commissioner may, at any time, designate a domestic substitute agent to replace the foreign common parent, even if the Commissioner approved the terminating common parent's designation.

(iv) *Group continues with a new common parent*—(A) *Year the new common parent becomes the common parent.* If the group has a domestic substitute agent and the group continues in existence with a new common parent during a consolidated return year, and such new common parent is a domestic corporation (determined without regard to section 7874 or a section 953(d) election), the domestic substitute agent at the beginning of the year is the agent for the group through the date of the transaction in which the new common parent becomes the common parent, and the new common parent becomes the agent for the group beginning the day after the transaction, at which time it becomes the agent for the group with respect to the entire consolidated return year (including the period through the date of the transaction) and the former domestic substitute agent will no longer be the agent for the group for that year.

(B) *Years preceding the year the new common parent becomes the common parent.* If after the Commissioner's designation of a domestic substitute agent the group remains in existence with a new common parent, and such new common parent is a domestic corporation (determined without regard to section 7874 or a section 953(d) election), the Commissioner may designate the new common parent as the sole agent for the group for any of the group's prior taxable years (for which the consolidated Federal income tax return is due (without extensions) after July 23, 2007) in which the new common parent was a member of the group. For this purpose, the new common parent is treated as having been a member of the group for any taxable year it is primarily liable for the group's income tax liability.

(v) *Replacement of domestic substitute agent by the Commissioner.* The Commissioner may at any time, with or without a request from any member of the group, designate a replacement for a domestic substitute agent (or a successor to such agent).

(5) *Deemed § 1.1502–77(d) designation*—(i) *In general.* If the Commissioner designates a domestic substitute agent under this paragraph (j), it will be treated as a designation of a substitute agent under paragraph (d) of this section.

(ii) *Default substitute agent.* If the domestic substitute agent's existence terminates and it has a single successor that is a domestic corporation (without regard to section 269B) that is eligible to be a domestic substitute agent, such successor becomes the domestic substitute agent and is treated as a default substitute agent under paragraph (d)(2) of this section. See paragraph (d)(4) of this section regarding the consequences of the successor's failure to notify the Commissioner of its status as a default substitute agent. The default substitute agent shall use procedures in section 9 of Rev. Proc. 2002–43 (2002–2 CB 99) or a corresponding provision of a successor revenue procedure for notification. (See § 601.601(d)(2)(ii)(*b*) of this chapter.)

(6) *Request that IRS designate a domestic substitute agent*—(i) *Original designation.* If the common parent of the group is a foreign common parent, and the IRS has not designated a domestic substitute agent, one or more members of the group may request the IRS to make a designation for taxable years for which the consolidated Federal income tax return is due (without extensions) after July 23, 2007. Such request is deemed to be a request under paragraph (d)(3)(i) of this section. Members of the group shall use the procedures in

section 10 of Rev. Proc. 2002–43 (2002–2 CB 99) or a corresponding provision of a successor revenue procedure for this purpose. (See § 601.601(d)(2)(ii)(*b*) of this chapter.)

(ii) *Request that IRS replace a previously designated substitute agent.* If the IRS designates a domestic substitute agent pursuant to this paragraph (j), one or more members of the group may request that the IRS replace the designated domestic substitute agent with another member (or successor to another member). Such a request is deemed to be a request pursuant to paragraph (d)(3)(ii) of this section. Members of the group shall use the procedures in section 11 of Rev. Proc. 2002–43 (2002–2 CB 99) or a corresponding provision of a successor revenue procedure for this purpose. (See § 601.601(d)(2)(ii)(*b*) of this chapter.)

[T.D. 9002, 67 FR 43540, June 28, 2002, as amended by T.D. 9255, 71 FR 13002, Mar. 14, 2006; T.D. 9343, 72 FR 40067, July 23, 2007. Redesignated and amended by T.D. 9715, 80 FR 17318, Apr. 1, 2015]

REGULATIONS APPLICABLE TO TAXABLE YEARS BEFORE JANUARY 1, 1997

§ 1.1502–79A Separate return years generally applicable for consolidated return years beginning before January 1, 1997.

(a) *Carryover and carryback of consolidated net operating losses to separate return years*—(1) *In general.* (i) If a consolidated net operating loss can be carried under the principles of section 172(b) and paragraph (b) of § 1.1502–21A to a separate return year of a corporation (or could have been so carried if such corporation were in existence) which was a member in the year in which such loss arose, then the portion of such consolidated net operating loss attributable to such corporation (as determined under subparagraph (3) of this paragraph) shall be apportioned to such corporation (and any successor to such corporation in a transaction to which section 381(a) applies) and shall be a net operating loss carryover or carryback to such separate return year; accordingly, such portion shall not be included in the consolidated net operating loss carryovers or carrybacks to the equivalent consolidated return year. Thus, for example, if a member filed a separate return for the third year preceding a consolidated return year in which a consolidated net operating loss was sustained and if any portion of such loss is apportioned to such member for such separate return year, such portion may not be carried back by the group to its third year preceding such consolidated return year.

(ii) If a corporation ceases to be a member during a consolidated return year, any consolidated net operating loss carryover from a prior taxable year must first be carried to such consolidated return year, notwithstanding that all or a portion of the consolidated net operating loss giving rise to the carryover is attributable to the corporation which ceases to be a member. To the extent not absorbed in such consolidated return year, the portion of the consolidated net operating loss attributable to the corporation ceasing to be a member shall then be carried to such corporation's first separate return year.

(iii) For rules permitting the reattribution of losses of a subsidiary to the common parent in the case of loss disallowance or basis reduction on the disposition or deconsolidation of stock of the subsidiary, see § 1.1502–20.

(2) *Nonapportionment to certain members not in existence.* Notwithstanding subparagraph (1) of this paragraph, the portion of a consolidated net operating loss attributable to a member shall not be apportioned to a prior separate return year for which such member was not in existence and shall be included in the consolidated net operating loss carrybacks to the equivalent consolidated return year of the group (or, if such equivalent year is a separate return year, then to such separate return year), provided that such member was a member of the group immediately after its organization.

(3) *Portion of consolidated net operating loss attributable to a member.* The portion of a consolidated net operating loss attributable to a member of a group is an amount equal to the consolidated net operating loss multiplied by a fraction, the numerator of which is the separate net operating loss of such corporation, and the denominator of which is the sum of the separate net

operating losses of all members of the group in such year having such losses. For purposes of this subparagraph, the separate net operating loss of a member of the group shall be determined under § 1.1502–12 (except that no deduction shall be allowed under section 242), adjusted for the following items taken into account in the computation of the consolidated net operating loss:

(i) The portion of the consolidated dividends received deduction, the consolidated charitable contributions deductions, and the consolidated section 247 deduction, attributable to such member;

(ii) Such member's capital gain net income (net capital gain for taxable years beginning before January 1, 1977) (determined without regard to any net capital loss carryover attributable to such member);

(iii) Such member's net capital loss and section 1231 net loss, reduced by the portion of the consolidated net capital loss attributable to such member (as determined under paragraph (b)(2) of this section); and

(iv) The portion of any consolidated net capital loss carryover attributable to such member which is absorbed in the taxable year.

(4) *Examples.* The provisions of this paragraph may be illustrated by the following examples:

Example 1. (i) Corporation P was formed on January 1, 1966. P filed a separate return for the calendar year 1966. On March 15, 1967, P formed corporation S. P and S filed a consolidated return for 1967. On January 1, 1968, P purchased all the stock of corporation T, which had been formed in 1967 and had filed a separate return for its taxable year ending December 31, 1967.

(ii) P, S, and T join in the filing of a consolidated return for 1968, which return reflects a consolidated net operating loss of $11,000. $2,000 of such consolidated net operating loss is attributable to P, $3,000 to S, and $6,000 to T. Such apportionment of the consolidated net operating loss was made on the basis of the separate net operating losses of each member as determined under subparagraph (3) of this paragraph.

(iii) $5,000 of the 1968 consolidated net operating loss can be carried back to P's separate return for 1966. Such amount is the portion of the consolidated net operating loss attributable to P and S. Even though S was not in existence in 1966, the portion attributable to S can be carried back to P's separate return year, since S (unlike T) was a member of the group immediately after its organization. The 1968 consolidated net operating loss can be carried back against the group's income in 1967 except to the extent (i.e., $6,000) that it is apportioned to T for its 1967 separate return year and to the extent that it was absorbed in P's 1966 separate return year. The portion of the 1968 consolidated net operating loss attributable to T ($6,000) is a net operating loss carryback to its 1967 separate return.

Example 2. (i) Assume the same facts as in example (1). Assume further that on June 15, 1969, P sells all the stock of T to an outsider, that P and S file a consolidated return for 1969 (which includes the income of T for the period January 1 through June 15), and that T files a separate return for the period June 16 through December 31, 1969.

(ii) The 1968 consolidated net operating loss, to the extent not absorbed in prior years, must first be carried to the consolidated return year 1969. Any portion of the $6,000 amount attributable to T which is not absorbed in T's 1967 separate return year or in the 1969 consolidated return year shall then be carried to T's separate return year ending December 31, 1969.

(b) *Carryover and carryback of consolidated net capital loss to separate return years*—(1) *In general.* If a consolidated net capital loss can be carried under the principles of section 1212(a) and paragraph (b) of § 1.1502–22A to a separate return year of a corporation (or could have been so carried if such corporation were in existence) which was a member of the group in the year in which such consolidated net capital loss arose, then the portion of such consolidated net capital loss attributable to such corporation (as determined under subparagraph (2) of this paragraph) shall be apportioned to such corporation (and any successor to such corporation in a transaction to which section 381(a) applies) under the principles of paragraph (a) (1), (2) and (3) of this section and shall be a net capital loss carryback or carryover to such separate return year.

(2) *Portion of consolidated net capital loss attributable to a member.* The portion of a consolidated net capital loss attributable to a member of a group is an amount equal to such consolidated net capital loss multiplied by a fraction, the numerator of which is the net capital loss of such member, and the denominator of which is the sum of the net capital losses of those members of the group having net capital losses.

For purposes of this subparagraph, the net capital loss of a member of the group shall be determined by taking into account the following:

(i) Such member's capital gain net income (net capital gain for taxable years beginning before January 1, 1977) or loss (determined without regard to any net capital loss carryover or carryback); and

(ii) Such member's section 1231 net loss, reduced by the portion of the consolidated section 1231 net loss attributable to such member.

(c)–(e) [Reserved]

(f) *Effective date*. Paragraphs (a) and (b) of this section apply to losses arising in consolidated return years to which §1.1502–21T(g) does not apply. For this purpose net operating loss deductions, carryovers, and carrybacks arise in the year from which they are carried. See §1.1502–21T(g) for effective dates of that section.

[T.D. 8677, 61 FR 33334, June 27, 1996]

REGULATIONS APPLYING SECTION 382 WITH RESPECT TO TESTING DATES (AND CORPORATIONS JOINING OR LEAVING CONSOLIDATED GROUPS) BEFORE JUNE 25, 1999

§ 1.1502–90A Table of contents.

The following list contains the major headings in §§1.1502–91A through 1.1502–99A:

§ 1.1502–91A Application of Section 382 With Respect to a Consolidated Group Generally Applicable for Testing Dates Before June 25, 1999.

(a) Determination and effect of an ownership change.
(1) In general.
(2) Special rule for post-change year that includes the change date.
(3) Cross reference.
(b) Definitions and nomenclature.
(c) Loss group.
(1) Defined.
(2) Coordination with rule that ends separate tracking.
(3) Example.
(d) Loss subgroup.
(1) Net operating loss carryovers.
(2) Net unrealized built-in loss.
(3) Loss subgroup parent.
(4) Principal purpose of avoiding a limitation.
(5) Special rules.
(6) Examples.
(e) Pre-change consolidated attribute.
(1) Defined.
(2) Example.
(f) Pre-change subgroup attribute.
(1) Defined.
(2) Example.
(g) Net unrealized built-in gain and loss.
(1) In general.
(2) Members included.
(i) Consolidated group.
(ii) Loss subgroup.
(3) Acquisitions of built-in gain or loss assets.
(4) Indirect ownership.
(h) Recognized built-in gain or loss.
(1) In general. [Reserved]
(2) Disposition of stock or an intercompany obligation of a member.
(3) Deferred gain or loss.
(4) Exchanged basis property.
(i) [Reserved]
(j) Predecessor and successor corporations.

§ 1.1502–92A Ownership change of a loss group or a loss subgroup generally applicable for testing dates before June 25, 1999.

(a) Scope.
(b) Determination of an ownership change.
(1) Parent change method.
(i) Loss group.
(ii) Loss subgroup.
(2) Examples.
(3) Special adjustments.
(i) Common parent succeeded by a new common parent.
(ii) Newly created loss subgroup parent.
(iii) Examples.
(4) End of separate tracking of certain losses.
(c) Supplemental rules for determining ownership change.
(1) Scope.
(2) Cause for applying supplemental rule.
(3) Operating rules.
(4) Supplemental ownership change rules.
(i) Additional testing dates for the common parent (or loss subgroup parent).
(ii) Treatment of subsidiary stock as stock of the common parent (or loss subgroup parent).
(iii) 5-percent shareholder of the common parent (or loss subgroup parent).
(5) Examples.
(d) Testing period following ownership change under this section.
(e) Information statements.
(1) Common parent of a loss group.
(2) Abbreviated statement with respect to loss subgroups.

§ 1.1502–93A Consolidated section 382 limitation (or subgroup section 382 limitation) generally applicable for testing dates before June 25, 1999.

(a) Determination of the consolidated section 382 limitation (or subgroup section 382 limitation).

(1) In general.
(2) Coordination with apportionment rule.
(b) Value of the loss group (or loss subgroup).
(1) Stock value immediately before ownership change.
(2) Adjustment to value.
(3) Examples.
(c) Recognized built-in gain of a loss group or loss subgroup.
(d) Continuity of business.
(1) In general.
(2) Example.
(e) Limitations of losses under other rules.

§ 1.1502–94A Coordination with section 382 and the regulations thereunder when a corporation becomes a member of a consolidated group generally applicable for corporations becoming members of a group before June 25, 1999.

(a) Scope.
(1) In general.
(2) Successor corporation as new loss member.
(3) Coordination in the case of a loss subgroup.
(4) End of separate tracking of certain losses.
(5) Cross-reference.
(b) Application of section 382 to a new loss member.
(1) In general.
(2) Adjustment to value.
(3) Pre-change separate attribute defined.
(4) Examples.
(c) Built-in gains and losses.
(d) Information statements.

§ 1.1502–95A Rules on ceasing to be a member of a consolidated group (or loss subgroup) generally applicable for corporations ceasing to be members before June 25, 1999.

(a) In general.
(1) Consolidated group.
(2) Election by common parent.
(3) Coordination with §§ 1.1502–91T through 1.1502–93T.
(b) Separate application of section 382 when a member leaves a consolidated group.
(1) In general.
(2) Effect of a prior ownership change of the group.
(3) Application in the case of a loss subgroup.
(4) Examples.
(c) Apportionment of a consolidated section 382 limitation.
(1) In general.
(2) Amount of apportionment.
(3) Effect of apportionment on the consolidated section 382 limitation.
(4) Effect on corporations to which the consolidated section 382 limitation is apportioned.
(5) Deemed apportionment when loss group terminates.
(6) Appropriate adjustments when former member leaves during the year.
(7) Examples.
(d) Rules pertaining to ceasing to be a member of a loss subgroup.
(1) In general.
(2) Examples.
(e) Filing the election to apportion.
(1) Form of the election to apportion.
(2) Signing of the election.
(3) Filing of the election.
(4) Revocation of election.

§ 1.1502–96A Miscellaneous rules generally applicable for testing dates before June 25, 1999.

(a) End of separate tracking of losses.
(1) Application.
(2) Effect of end of separate tracking.
(3) Continuing effect of end of separate tracking.
(4) Special rule for testing period.
(5) Limits on effects of end of separate tracking.
(b) Ownership change of subsidiary.
(1) Ownership change of a subsidiary because of options or plan or arrangement.
(2) Effect of the ownership change.
(i) In general.
(ii) Pre-change losses.
(3) Coordination with §§ 1.1502–91T, 1.1502–92T, and 1.1502–94T.
(4) Example.
(c) Continuing effect of an ownership change.

§ 1.1502–97A Special rules under section 382 for members under the jurisdiction of a court in a title 11 or similar case. [Reserved]

§ 1.1502–98A Coordination with section 383 generally applicable for testing dates (or members joining or leaving a group) before June 25, 1999.

§ 1.1502–99A Effective dates.

(a) Effective date.
(1) In general.
(2) Anti-duplication rules for recognized built-in gain.
(b) Testing period may include a period beginning before January 1, 1997.
(c) Transition rules.
(1) Methods permitted.
(i) In general.
(ii) Adjustments to offset excess limitation.
(iii) Coordination with effective date.
(2) Permitted methods.
(d) Amended returns.
(e) Section 383.

[T.D. 8678, 61 FR 33336, June 27, 1996. Redesignated and amended by T.D. 8824, 64 FR 36127, July 2, 1999]

§ 1.1502–91A Application of section 382 with respect to a consolidated group generally applicable for testing dates before June 25, 1999.

(a) *Determination and effect of an ownership change*—(1) *In general.* This section and §§ 1.1502–92A and 1.1502–93A set forth the rules for determining an ownership change under section 382 for members of consolidated groups and the section 382 limitations with respect to attributes described in paragraphs (e) and (f) of this section. These rules generally provide that an ownership change and the section 382 limitation are determined with respect to these attributes for the group (or loss subgroup) on a single entity basis and not for its members separately. Following an ownership change of a loss group (or a loss subgroup) under § 1.1502–92A, the amount of consolidated taxable income for any post-change year which may be offset by pre-change consolidated attributes (or pre-change subgroup attributes) shall not exceed the consolidated section 382 limitation (or subgroup section 382 limitation) for such year as determined under § 1.1502–93A.

(2) *Special rule for post-change year that includes the change date.* If the post-change year includes the change date, section 382(b)(3)(A) is applied so that the consolidated section 382 limitation (or subgroup section 382 limitation) does not apply to the portion of consolidated taxable income that is allocable to the period in the year on or before the change date. See generally § 1.382–6 (relating to the allocation of income and loss). The allocation of consolidated taxable income for the post-change year that includes the change date must be made before taking into account any consolidated net operating loss deduction (as defined in § 1.1502–21(a) or 1.1502–21T(a) in effect prior to June 25, 1999, as contained in 26 CFR part 1 revised April 1, 1999, as applicable).

(3) *Cross reference.* See §§ 1.1502–94A and 1.1502–95A for rules that apply section 382 to a corporation that becomes or ceases to be a member of a group or loss subgroup.

(b) *Definitions and nomenclature.* For purposes of this section and §§ 1.1502–92A through 1.1502–99A, unless otherwise stated:

(1) The definitions and nomenclature contained in section 382 and the regulations thereunder (including the nomenclature and assumptions relating to the examples in § 1.382–2T(b)) and this section and §§ 1.1502–92A through 1.1502–99A apply; and

(2) In all examples, all groups file consolidated returns, all corporations file their income tax returns on a calendar year basis, the only 5-percent shareholder of a corporation is a public group, the facts set forth the only owner shifts during the testing period, and each asset of a corporation has a value equal to its adjusted basis.

(c) *Loss group*—(1) *Defined.* A loss group is a consolidated group that:

(i) Is entitled to use a net operating loss carryover to the taxable year that did not arise (and is not treated under § 1.1502–21T(c) as arising) in a SRLY;

(ii) Has a consolidated net operating loss for the taxable year in which a testing date of the common parent occurs (determined by treating the common parent as a loss corporation); or

(iii) Has a net unrealized built-in loss (determined under paragraph (g) of this section by treating the date on which the determination is made as though it were a change date).

(2) *Coordination with rule that ends separate tracking.* A consolidated group may be a loss group because a member's losses that arose in (or are treated as arising in) a SRLY are treated as described in paragraph (c)(1)(i) of this section. See § 1.1502–96A(a).

(3) *Example.* The following example illustrates the principles of this paragraph (c).

Example. Loss group. (a) L and L1 file separate returns and each has a net operating loss carryover arising in Year 1 that is carried over to Year 2. A owns 40 shares and L owns 60 shares of the 100 outstanding shares of L1 stock. At the close of Year 1, L buys the 40 shares of L1 stock from A. For Year 2, L and L1 file a consolidated return. The following is a graphic illustration of these facts:

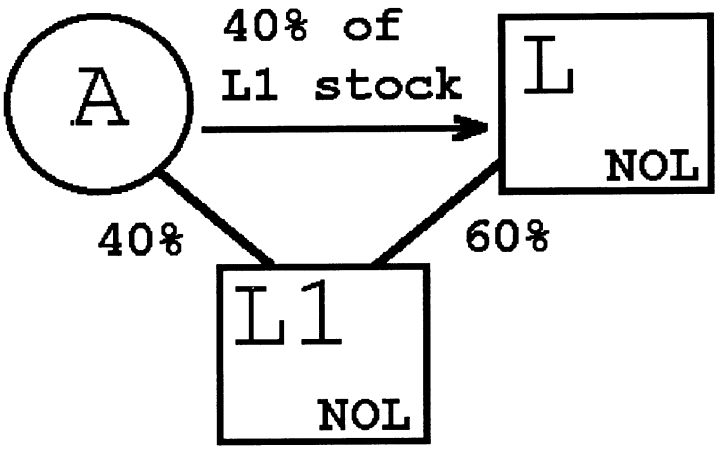

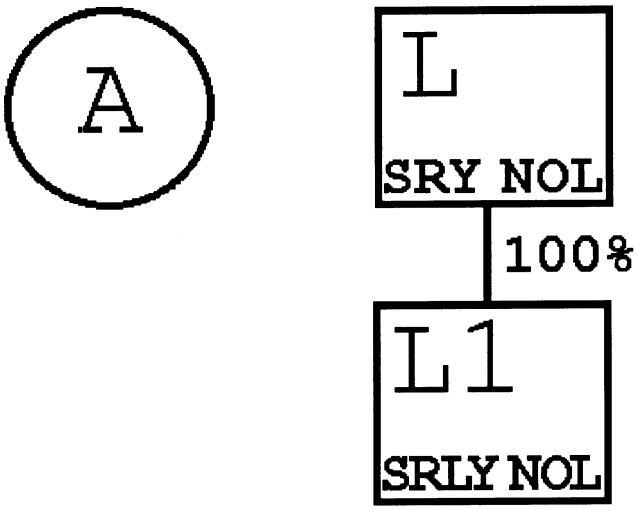

(b) L and L1 become a loss group at the beginning of Year 2 because the group is entitled to use the Year 1 net operating loss carryover of L, the common parent, which did not arise (and is not treated under §1.1502–21(c) or 1.1502–21T(c) in effect prior to June 25, 1999, as contained in 26 CFR part 1 revised April 1, 1999, as applicable as arising) in a SRLY. See §1.1502–94A for rules relating to the application of section 382 with respect to L1's net operating loss carryover from Year 1 which did arise in a SRLY.

(d) *Loss subgroup*—(1) *Net operating loss carryovers.* Two or more corporations that become members of a consolidated group (the current group) compose a loss subgroup if:

(i) They were affiliated with each other in another group (the former group), whether or not the group was a consolidated group;

(ii) They bear the relationship described in section 1504(a)(1) to each other through a loss subgroup parent immediately after they become members of the current group; and

(iii) At least one of the members carries over a net operating loss that did not arise (and is not treated under § 1.1502–21(c) or 1.1502–21T(c) in effect prior to June 25, 1999, as contained in 26 CFR part 1 revised April 1, 1999, as applicable as arising) in a SRLY with respect to the former group.

(2) *Net unrealized built-in loss*. Two or more corporations that become members of a consolidated group compose a loss subgroup if they:

(i) Have been continuously affiliated with each other for the 5 consecutive year period ending immediately before they become members of the group;

(ii) Bear the relationship described in section 1504(a)(1) to each other through a loss subgroup parent immediately after they become members of the current group; and

(iii) Have a net unrealized built-in loss (determined under paragraph (g) of this section on the day they become members of the group by treating that day as though it were a change date).

(3) *Loss subgroup parent*. A loss subgroup parent is the corporation that bears the same relationship to the other members of the loss subgroup as a common parent bears to the members of a group.

(4) *Principal purpose of avoiding a limitation*. The corporations described in paragraph (d)(1) or (2) of this section do not compose a loss subgroup if any one of them is formed, acquired, or availed of with a principal purpose of avoiding the application of, or increasing any limitation under, section 382. Instead, § 1.1502–94A applies with respect to the attributes of each such corporation. This paragraph (d)(4) does not apply solely because, in connection with becoming members of the group, the members of a group (or loss subgroup) are rearranged to bear a relationship to the other members described in section 1504(a)(1).

(5) *Special rules*. See § 1.1502–95A(d) for rules concerning when a corporation ceases to be a member of a loss subgroup. See also § 1.1502–96A(a) for a special rule regarding the end of separate tracking of SRLY losses of a member that has an ownership change or that has been a member of a group for at least 5 consecutive years.

(6) *Examples*. The following examples illustrate the principles of this paragraph (d).

Example 1. Loss subgroup. (a) P owns all the L stock and L owns all the L1 stock. The P group has a consolidated net operating loss arising in Year 1 that is carried to Year 2. On May 2, Year 2, P sells all the stock of L to A, and L and L1 thereafter file consolidated returns. A portion of the Year 1 consolidated net operating loss is apportioned under § 1.1502–21(b) or 1.1502–21T(b) in effect prior to June 25, 1999, as contained in 26 CFR part 1 revised April 1, 1999, as applicable to each of L and L1, which they carry over to Year 2. The following is a graphic illustration of these facts:

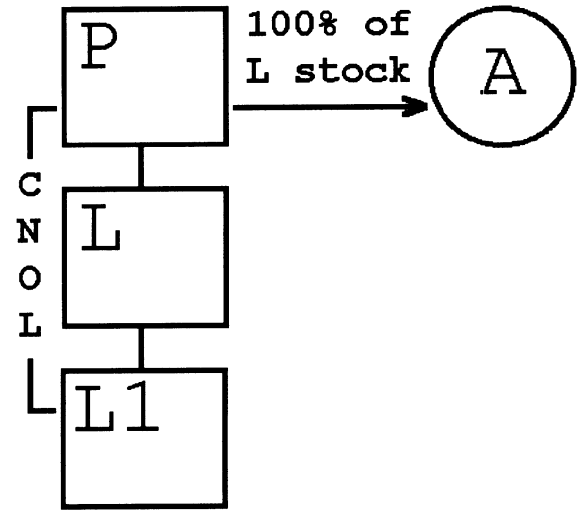

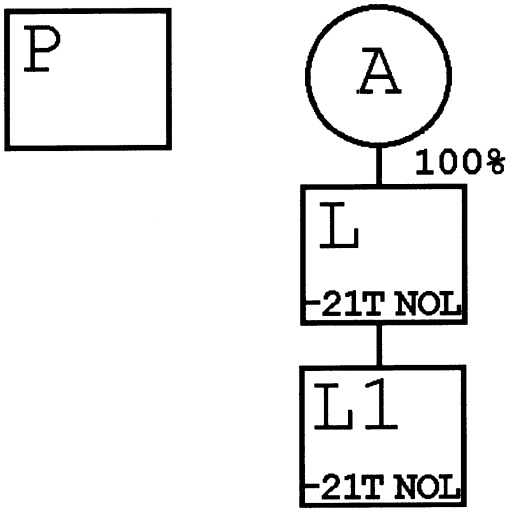

(b) (1) L and L1 compose a loss subgroup within the meaning of paragraph (d)(1) of this section because—

(i) They were affiliated with each other in the P group (the former group);

(ii) They bear a relationship described in section 1504(a)(1) to each other through a loss subgroup parent (L) immediately after they became members of the L group; and

(iii) At least one of the members (here, both L and L1) carries over a net operating loss to the L group (the current group) that did not arise in a SRLY with respect to the P group.

(2) Under paragraph (d)(3) of this section, L is the loss subgroup parent of the L loss subgroup.

Example 2. Loss subgroup—section 1504(a)(1) relationship. (a) P owns all the stock of L and

L1. L owns all the stock of L2. L1 and L2 own 40 percent and 60 percent of the stock of L3, respectively. The P group has a consolidated net operating loss arising in Year 1 that is carried over to Year 2. On May 22, Year 2, P sells all the stock of L and L1 to P1, the common parent of another consolidated group. The Year 1 consolidated net operating loss is apportioned under §1.1502–21(b) or 1.1502–21T(b) in effect prior to June 25, 1999, as contained in 26 CFR part 1 revised April 1, 1999, as applicable, and each of L, L1, L2, and L3 carries over a portion of such loss to the first consolidated return year of the P1 group ending after the acquisition. The following is a graphic illustration of these facts:

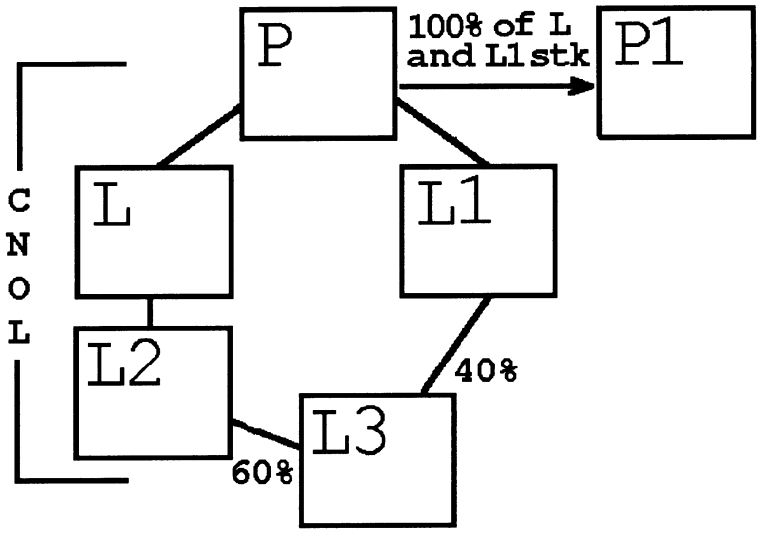

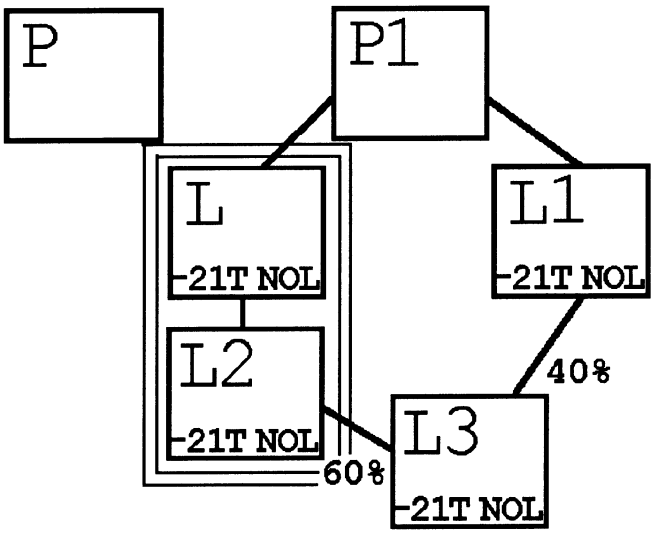

(b) L and L2 compose a loss subgroup within the meaning of paragraph (d)(1) of this section. Neither L1 nor L3 is included in a loss subgroup because neither bears a relationship described in section 1504(a)(1) through a loss subgroup parent to any other member of the former group immediately after becoming members of the P1 group.

Example 3. Loss subgroup—section 1504(a)(1) relationship. The facts are the same as in *Example 2,* except that the stock of L1 is transferred to L in connection with the sale of the

L stock to P1. L, L1, L2, and L3 compose a loss subgroup within the meaning of paragraph (d)(1) of this section because—

(1) They were affiliated with each other in the P group (the former group);

(2) They bear a relationship described in section 1504(a)(1) to each other through a loss subgroup parent (L) immediately after they become members of the P1 group; and

(3) At least one of the members (here, each of L, L1, L2, and L3) carries over to the P1 group (the current group) a net operating loss that did not arise in a SRLY with respect to the P group (the former group).

(e) *Pre-change consolidated attribute*—(1) *Defined*. A pre-change consolidated attribute of a loss group is—

(i) Any loss described in paragraph (c)(1) (i) or (ii) of this section (relating to the definition of loss group) that is allocable to the period ending on or before the change date; and

(ii) Any recognized built-in loss of the loss group.

(2) *Example*. The following example illustrates the principle of this paragraph (e).

Example. Pre-change consolidated attribute. (a) The L group has a consolidated net operating loss arising in Year 1 that is carried over to Year 2. The L loss group has an ownership change at the beginning of Year 2.

(b) The net operating loss carryover of the L loss group from Year 1 is a pre-change consolidated attribute because the L group was entitled to use the loss in Year 2, the loss did not arise in a SRLY with respect to the L group, and therefore the loss was described in paragraph (c)(1)(i) of this section. Under paragraph (a) of this section, the amount of consolidated taxable income of the L group for Year 2 that may be offset by this loss carryover may not exceed the consolidated section 382 limitation of the L group for that year. See §1.1502–93A for rules relating to the computation of the consolidated section 382 limitation.

(f) *Pre-change subgroup attribute*—(1) *Defined*. A pre-change subgroup attribute of a loss subgroup is—

(i) Any net operating loss carryover described in paragraph (d)(1)(iii) of this section (relating to the definition of loss subgroup); and

(ii) Any recognized built-in loss of the loss subgroup.

(2) *Example*. The following example illustrates the principle of this paragraph (f).

Example. Pre-change subgroup attribute. (a) P is the common parent of a consolidated group. P owns all the stock of L, and L owns all the stock of L1. L2 is not a member of an affiliated group, and has a net operating loss arising in Year 1 that is carried over to Year 2. On December 11, Year 2, L1 acquires all the stock of L2, causing an ownership change of L2. During Year 2, the P group has a consolidated net operating loss that is carried over to Year 3. On November 2, Year 3, M acquires all the L stock from P. M, L, L1, and L2 thereafter file consolidated returns. All of the P group Year 2 consolidated net operating loss is apportioned under §1.1502–21(b) or 1.1502–21T(b) in effect prior to June 25, 1999, as contained in 26 CFR part 1 revised April 1, 1999, as applicable to L and L2, which they carry over to the M group.

(b)(1) L, L1, and L2 compose a loss subgroup because—

(i) They were affiliated with each other in the P group (the former group);

(ii) They bore a relationship described in section 1504(a)(1) to each other through a loss subgroup parent (L) immediately after they became members of the L group; and

(iii) At least one of the members (here, both L and L2) carries over a net operating loss to the M group (the current group) that is described in paragraph (d)(1)(iii) of this section.

(2) For this purpose, L2's loss from Year 1 that was a SRLY loss with respect to the P group (the former group) is treated as described in paragraph (d)(1)(iii) of this section because of the application of the principles of §1.1502–96A(a). See paragraph (d)(5) of this section. M's acquisition results in an ownership change of L, and therefore the L loss subgroup under §1.1502–92A(a)(2). See §1.1502–93A for rules governing the computation of the subgroup section 382 limitation.

(c) In the M group, L2's Year 1 loss continues to be subject to a section 382 limitation resulting from the ownership change that occurred on December 11, Year 2. See §1.1502–96A(c).

(g) *Net unrealized built-in gain and loss*—(1) *In general*. The determination whether a consolidated group (or loss subgroup) has a net unrealized built-in gain or loss under section 382(h)(3) is based on the aggregate amount of the separately computed net unrealized built-in gains or losses of each member that is included in the group (or loss subgroup) under paragraph (g)(2) of this section, including items of built-in income and deduction described in section 382(h)(6). Thus, for example, amounts deferred under section 267, or under §1.1502–13 (other than amounts deferred with respect to the stock of a

member (or an intercompany obligation) included in the group (or loss subgroup) under paragraph (g)(2) of this section) are built-in items. The threshold requirement under section 382(h)(3)(B) applies on an aggregate basis and not on a member-by-member basis. The separately computed amount of a member included in a group or loss subgroup does not include any unrealized built-in gain or loss on stock (including stock described in section 1504(a)(4) and §1.382–2T(f)(18)(ii) and (iii)) of another member included in the group or loss subgroup (or on an intercompany obligation). However, a member of a group or loss subgroup includes in its separately computed amount the unrealized built-in gain or loss on stock of another member (or on an intercompany obligation) not included in the group or loss subgroup. If a member is not included in a group (or loss subgroup) under paragraph (g)(2) of this section, the determination of whether the member has a net unrealized built-in gain or loss under section 382(h)(3) is made on a separate entity basis. See §1.1502–94A(c) (relating to built-in gain or loss of a new loss member) and §1.1502–96A(a) (relating to the end of separate tracking of certain losses).

(2) *Members included*—(i) *Consolidated group*. The members included in the determination whether a consolidated group has a net unrealized built-in gain or loss are all members of the group on the day that the determination is made other than—

(A) A new loss member with a net unrealized built-in loss described in §1.1502–94A(a)(1)(ii); and

(B) Members included in a loss subgroup described in §1.1502–91A(d)(2).

(ii) *Loss subgroup*. The members included in the determination whether a loss subgroup has a net unrealized built-in gain or loss are those members described in paragraphs (d)(2)(i) and (ii) of this section.

(3) *Acquisitions of built-in gain or loss assets*. A member of a consolidated group (or loss subgroup) may not, in determining its separately computed net unrealized built-in gain or loss, include any gain or loss with respect to assets acquired with a principal purpose to affect the amount of its net unrealized built-in gain or loss. A group (or loss subgroup) may not, in determining its net unrealized built-in gain or loss, include any gain or loss of a member acquired with a principal purpose to affect the amount of its net unrealized built-in gain or loss.

(4) *Indirect ownership*. A member's separately computed net unrealized built-in gain or loss is adjusted to the extent necessary to prevent any duplication of unrealized gain or loss attributable to the member's indirect ownership interest in another member through a nonmember if the member has a 5-percent or greater ownership interest in the nonmember.

(h) *Recognized built-in gain or loss*—(1) *In general*. [Reserved]

(2) *Disposition of stock or an intercompany obligation of a member*. Gain or loss recognized by a member on the disposition of stock (including stock described in section 1504(a)(4) and §1.382–2T(f)(18)(ii) and (iii)) of another member or an intercompany obligation disposed of before June 25, 1999 is treated as a recognized built-in gain or loss under section 382(h)(2) (unless disallowed under §1.1502–20 or otherwise), even though gain or loss on such stock or obligation was not included in the determination of a net unrealized built-in gain or loss under paragraph (g)(1) of this section.

(3) *Deferred gain or loss*. Gain or loss that is deferred under provisions such as section 267 and §1.1502–13 is treated as recognized built-in gain or loss only to the extent taken into account by the group during the recognition period.

(4) *Exchanged basis property*. If the adjusted basis of any asset is determined, directly or indirectly, in whole or in part, by reference to the adjusted basis of another asset held by the member at the beginning of the recognition period, the asset is treated, with appropriate adjustments, as held by the member at the beginning of the recognition period.

(i) [Reserved]

(j) Predecessor and successor corporations. A reference in this section and §§1.1502–92A through 1.1502–99A to a corporation, member, common parent, loss subgroup parent, or subsidiary includes, as the context may require, a

reference to a predecessor or successor corporation. For example, the determination whether a successor satisfies the continuous affiliation requirement of paragraph (d)(2)(i) of this section is made by reference to its predecessor.

[T.D. 8678, 61 FR 33337, June 27, 1996, as amended by T.D. 8823, 64 FR 36100, July 2, 1999. Redesignated and amended by T.D. 8824, 64 FR 36125, 36127, July 2, 1999]

§ 1.1502–92A Ownership change of a loss group or a loss subgroup generally applicable for testing dates before June 25, 1999.

(a) *Scope*. This section provides rules for determining if there is an ownership change for purposes of section 382 with respect to a loss group or a loss subgroup. See § 1.1502–94A for special rules for determining if there is an ownership change with respect to a new loss member and § 1.1502–96A(b) for special rules for determining if there is an ownership change of a subsidiary.

(b) *Determination of an ownership change*—(1) *Parent change method*—(i) *Loss group*. A loss group has an ownership change if the loss group's common parent has an ownership change under section 382 and the regulations thereunder. Solely for purposes of determining whether the common parent has an ownership change—

(A) The losses described in § 1.1502–91A(c) are treated as net operating losses (or a net unrealized built-in loss) of the common parent; and

(B) The common parent determines the earliest day that its testing period can begin by reference to only the attributes that make the group a loss group under § 1.1502–91A(c).

(ii) *Loss subgroup*. A loss subgroup has an ownership change if the loss subgroup parent has an ownership change under section 382 and the regulations thereunder. The principles of § 1.1502–95A(b) (relating to ceasing to be a member of a consolidated group) apply in determining whether the loss subgroup parent has an ownership change. Solely for purposes of determining whether the loss subgroup parent has an ownership change—

(A) The losses described in § 1.1502–91A(d) are treated as net operating losses (or a net unrealized built-in loss) of the loss subgroup parent;

(B) The day that the members of the loss subgroup become members of the group (or a loss subgroup) is treated as a testing date within the meaning of § 1.382–2(a)(4); and

(C) The loss subgroup parent determines the earliest day that its testing period can begin under § 1.382–2T(d)(3) by reference to only the attributes that make the members a loss subgroup under § 1.1502–91A(d).

(2) *Examples*. The following examples illustrate the principles of this paragraph (b).

Example 1. Loss group—ownership change of the common parent. (a) A owns all the L stock. L owns 80 percent and B owns 20 percent of the L1 stock. For Year 1, the L group has a consolidated net operating loss that resulted from the operations of L1 and that is carried over to Year 2. The value of the L stock is $1000. The total value of the L1 stock is $600 and the value of the L1 stock held by B is $120. The L group is a loss group under § 1.1502–91A(c)(1) because it is entitled to use its net operating loss carryover from Year 1. On August 15, Year 2, A sells 51 percent of the L stock to C. The following is a graphic illustration of these facts:

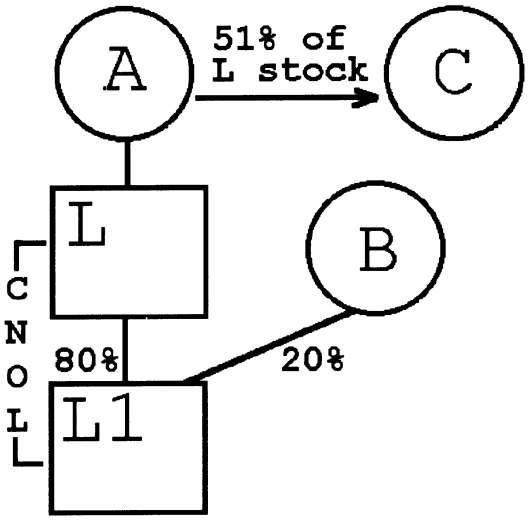

(b) Under paragraph (b)(1)(i) of this section, section 382 and the regulations thereunder are applied to L to determine whether it (and therefore the L loss group) has an ownership change with respect to its net operating loss carryover from Year 1 attributable to L1 on August 15, Year 2. The sale of the L stock to C causes an ownership change of L under §1.382–2T and of the L loss group under paragraph (b)(1)(i) of this section. The amount of consolidated taxable income of the L loss group for any post-change taxable year that may be offset by its pre-change consolidated attributes (that is, the net operating loss carryover from Year 1 attributable to L1) may not exceed the consolidated section 382 limitation for the L loss group for the taxable year.

Example 2. Loss group—owner shifts of subsidiaries disregarded. (a) The facts are the same as in *Example 1*, except that on August 15, Year 2, A sells only 49 percent of the L stock to C and, on December 12, Year 3, in an unrelated transaction, B sells the 20 percent of the L1 stock to D. A's sale of the L stock to C does not cause an ownership change of L under §1.382–2T nor of the L loss group under paragraph (b)(1)(i) of this section. The following is a graphic illustration of these facts:

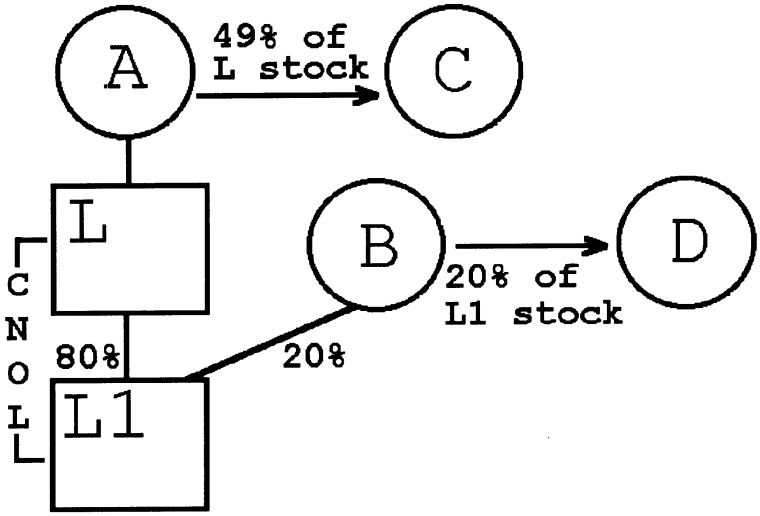

(b) B's subsequent sale of L1 stock is not taken into account for purposes of determining whether the L loss group has an ownership change under paragraph (b)(1)(i) of this section, and, accordingly, there is no ownership change of the L loss group. See paragraph (c) of this section, however, for a supplemental ownership change method that would apply to cause an ownership change if the purchases by C and D were pursuant to a plan or arrangement.

Example 3. Loss subgroup—ownership change of loss subgroup parent controls. (a) P owns all the L stock. L owns 80 percent and A owns 20 percent of the L1 stock. The P group has a consolidated net operating loss arising in Year 1 that is carried over to Year 2. On September 9, Year 2, P sells 51 percent of the L stock to B, and L1 is apportioned a portion of the Year 1 consolidated net operating loss under §1.1502–21(b) or 1.1502–21T(b) in effect prior to June 25, 1999, as contained in 26 CFR part 1 revised April 1, 1999, as applicable, which it carries over to its next taxable year. L and L1 file a consolidated return for their first taxable year ending after the sale to B. The following is a graphic illustration of these facts:

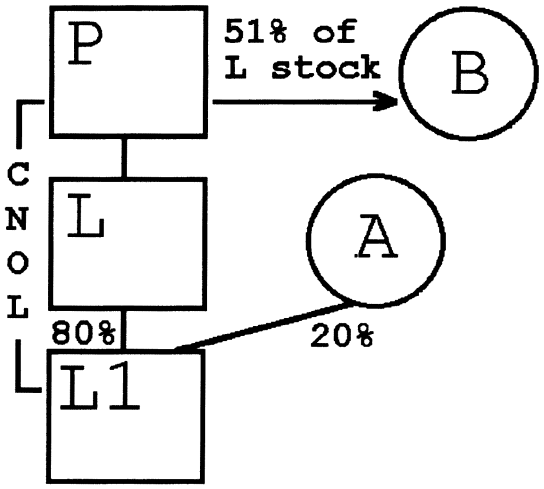

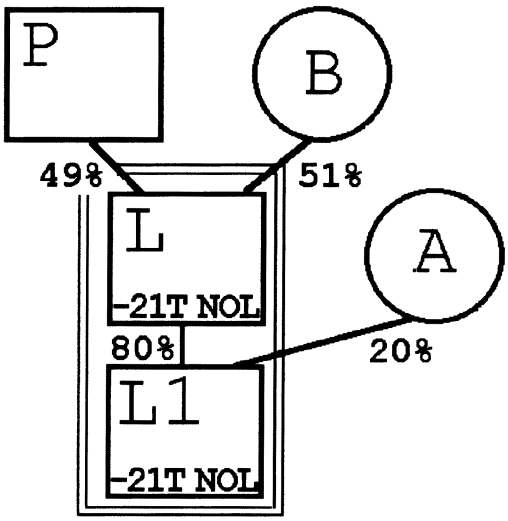

(b) Under §1.1502–91A(d)(1), L and L1 compose a loss subgroup on September 9, Year 2, the day that they become members of the L group. Under paragraph (b)(1)(ii) of this section, section 382 and the regulations thereunder are applied to L to determine whether it (and therefore the L loss subgroup) has an ownership change with respect to the portion of the Year 1 consolidated net operating loss that is apportioned to L1 on September 9, Year 2. L has an ownership change resulting from P's sale of 51 percent of the L stock to A. Therefore, the L loss subgroup has an ownership change with respect to that loss.

Example 4. Loss group and loss subgroup—contemporaneous ownership changes. (a) A owns all the stock of corporation M, M owns 35 percent and B owns 65 percent of the L

stock, and L owns all the L1 stock. The L group has a consolidated net operating loss arising in Year 1 that is carried over to Year 2. On May 19, Year 2, B sells 45 percent of the L stock to M for cash. M, L, and L1 thereafter file consolidated returns. L and L1 are each apportioned a portion of the Year 1 consolidated net operating loss, which they carry over to the M group's Year 2 and Year 3 consolidated return years. The M group has a consolidated net operating loss arising in Year 2 that is carried over to Year 3. On June 9, Year 3, A sells 70 percent of the M stock to C. The following is a graphic illustration of these facts:

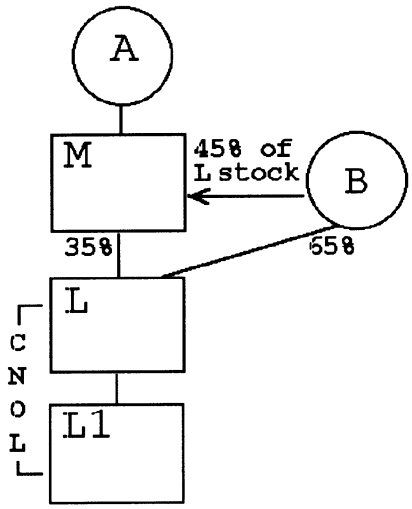

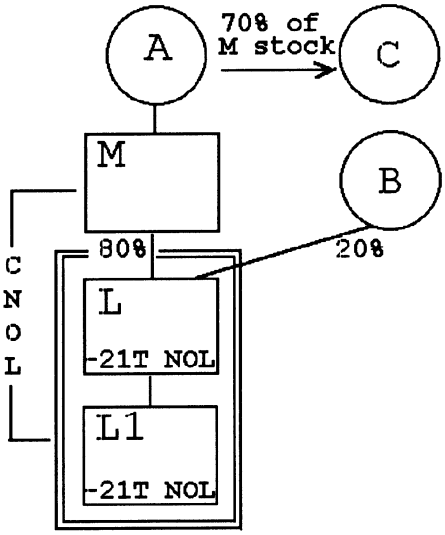

(b) Under §1.1502–91A(d)(1), L and L1 compose a loss subgroup on May 19, Year 2, the day they become members of the M group. Under paragraph (b)(1)(ii) of this section, section 382 and the regulations thereunder are applied to L to determine whether L (and therefore the L loss subgroup) has an ownership change with respect to the loss carryovers from Year 1 on May 19, Year 2, a testing date because of B's sale of L stock to M. The sale of L stock to M results in only a 45 percentage point increase in A's ownership of L stock. Thus, there is no ownership change of L (or the L loss subgroup) with respect to those loss carryovers under paragraph (b)(1)(ii) of this section on that day.

(c) June 9, Year 3, is also a testing date with respect to the L loss subgroup because of A's sale of M stock to C. The sale results in a 56 percentage point increase in C's ownership of L stock, and L has an ownership change. Therefore, the L loss subgroup has an ownership change on that day with respect to the loss carryovers from Year 1.

(d) Paragraph (b)(1)(i) of this section requires that section 382 and the regulations thereunder be applied to M to determine whether M (and therefore the M loss group) has an ownership change with respect to the net operating loss carryover from Year 2 on June 9, Year 3, a testing date because of A's sale of M stock to C. The sale results in a 70 percentage point increase in C's ownership of M stock, and M has an ownership change. Therefore, the M loss group has an ownership change on that day with respect to that loss carryover.

(3) *Special adjustments*—(i) *Common parent succeeded by a new common parent.* For purposes of determining if a loss group has an ownership change, if the common parent of a loss group is succeeded or acquired by a new common parent and the loss group remains in existence, the new common parent is treated as a continuation of the former common parent with appropriate adjustments to take into account shifts in ownership of the former common parent during the testing period (including shifts that occur incident to the common parent's becoming the former common parent).

(ii) *Newly created loss subgroup parent.* For purposes of determining if a loss subgroup has an ownership change, if the member that is the loss subgroup parent has not been the loss subgroup parent for at least 3 years as of a testing date, appropriate adjustments must be made to take into account owner shifts of members of the loss subgroup so that the structure of the loss subgroup does not have the effect of avoiding an ownership change under section 382. (See paragraph (b)(3)(iii) *Example 3* of this section.)

(iii) *Examples.* The following examples illustrate the principles of this paragraph (b)(3).

Example 1. New common parent acquires old common parent. (a) A, who owns all the L stock, sells 30 percent of the L stock to B on August 26, Year 1. L owns all the L1 stock. The L group has a consolidated net operating loss arising in Year 1 that is carried over to Year 3. On July 16, Year 2, A and B transfer their L stock to a newly created holding company, HC, in exchange for 70 percent and 30 percent, respectively, of the HC stock. HC, L, and L1 thereafter file consolidated returns. Under the principles of §1.1502–75(d), the L loss group is treated as remaining in existence, with HC taking the place of L as the new common parent of the loss group. The following is a graphic illustration of these facts:

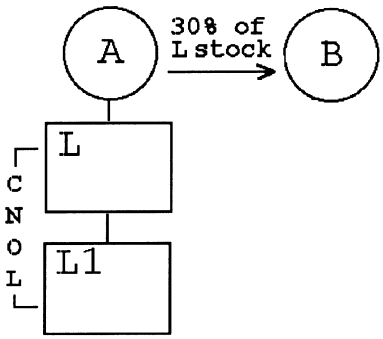

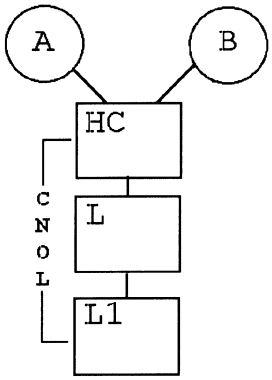

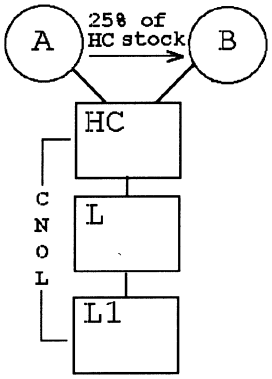

(b) On November 11, Year 3, A sells 25 percent of the HC stock to B. For purposes of determining if the L loss group has an ownership change under paragraph (b)(1)(i) of this section on November 11, Year 3, HC is treated as a continuation of L under paragraph (b)(3)(i) of this section because it acquired L and became the common parent

without terminating the L loss group. Accordingly, HC's testing period commences on January 1, Year 1, the first day of the taxable year of the L loss group in which the consolidated net operating loss that is carried over to Year 3 arose (see §1.382–2T(d)(3)(i)). Immediately after the close of November 11, Year 3, B's percentage ownership interest in the common parent of the loss group (HC) has increased by 55 percentage points over its lowest percentage ownership during the testing period (zero percent). Accordingly, HC and the L loss group have an ownership change on that day.

Example 2. Common parent in case in which common parent ceases to exist. (a) A, B, and C each own one-third of the L stock. L owns all the L1 stock. The L group has a consolidated net operating loss arising in Year 2 that is carried over to Year 3. On November 22, Year 3, L is merged into P, a corporation owned by D, and L1 thereafter files consolidated returns with P. A, B, and C, as a result of owning stock of L, own 90 percent of P's stock after the merger. D owns the remaining 10 percent of P's stock. The merger of L into P qualifies as a reverse acquisition of the L group under §1.1502–75(d)(3)(i), and the L loss group is treated as remaining in existence, with P taking the place of L as the new common parent of the L group. The following is a graphic illustration of these facts:

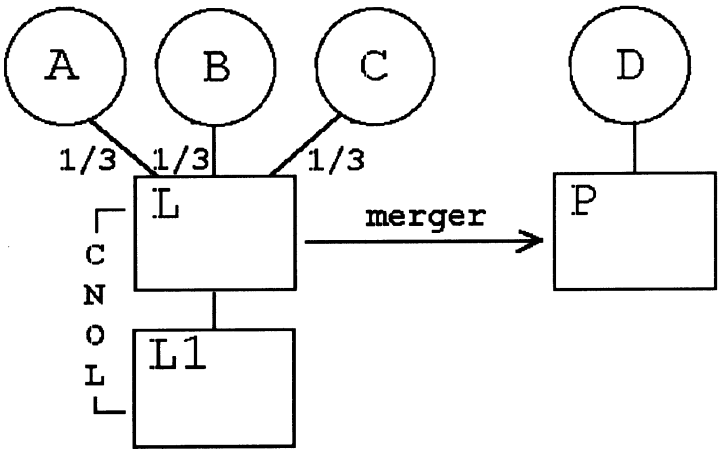

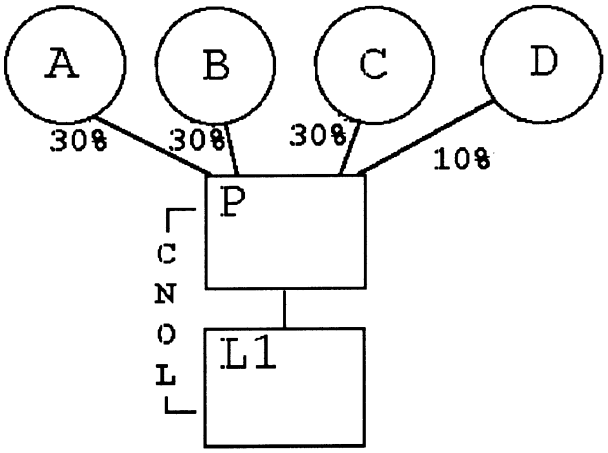

(b) For purposes of determining if the L loss group has an ownership change on November 22, Year 3, the day of the merger, P is treated as a continuation of L so that the testing period for P begins on January 1, Year 2, the first day of the taxable year of the L loss group in which the consolidated net operating loss that is carried over to Year 3 arose. Immediately after the close of November 22, Year 3, D is the only 5-percent shareholder that has increased his ownership interest in P during the testing period (from zero to 10 percentage points).

(c) The facts are the same as in paragraph (a) of this *Example 2*, except that A has held 23⅓ shares (23⅓ percent) of L's stock for five years, and A purchased an additional 10 shares of L stock from E two years before the merger. Immediately after the close of the day of the merger (a testing date), A's ownership interest in P, the common parent of the L loss group, has increased by 6⅔ percentage points over her lowest percentage

ownership during the testing period (23⅓ percent to 30 percent).

(d) The facts are the same as in (a) of this *Example 2*, except that P has a net operating loss arising in Year 1 that is carried to the first consolidated return year ending after the day of the merger. Solely for purposes of determining whether the L loss group has an ownership change under paragraph (b)(1)(i) of this section, the testing period for P commences on January 1, Year 2. P does not determine the earliest day for its testing period by reference to its net operating loss carryover from Year 1, which §§1502–1(f)(3) and 1.1502–75(d)(3)(i) treat as arising in a SRLY. See §1.1502–94A to determine the application of section 382 with respect to P's net operating loss carryover.

Example 3. Newly acquired loss subgroup parent. (a) P owns all the L stock and L owns all the L1 stock. The P group has a consolidated net operating loss arising in Year 1 that is carried over to Year 3. On January 19, Year 2, L issues a 20 percent stock interest to B. On February 5, Year 3, P contributes its L stock to a newly formed subsidiary, HC, in exchange for all the HC stock, and distributes the HC stock to its sole shareholder A. HC, L, and L1 thereafter file consolidated returns. A portion of the P group's Year 1 consolidated net operating loss is apportioned to L and L1 under §1.1502–21T(b) and is carried over to the HC group's year ending after February 5, Year 3. HC, L, and L1 compose a loss subgroup within the meaning of §1.1502–91A(d) with respect to the net operating loss carryovers from Year 1. The following is a graphic illustration of these facts:

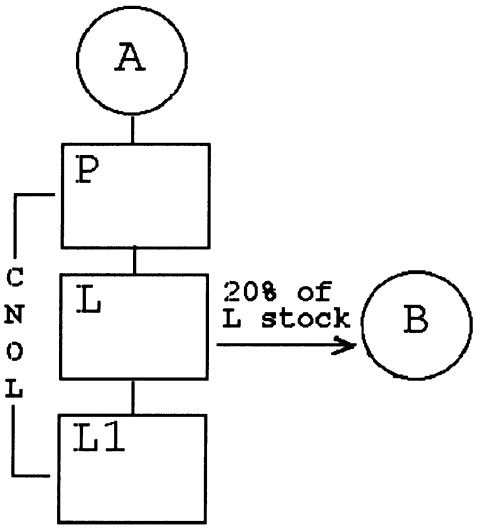

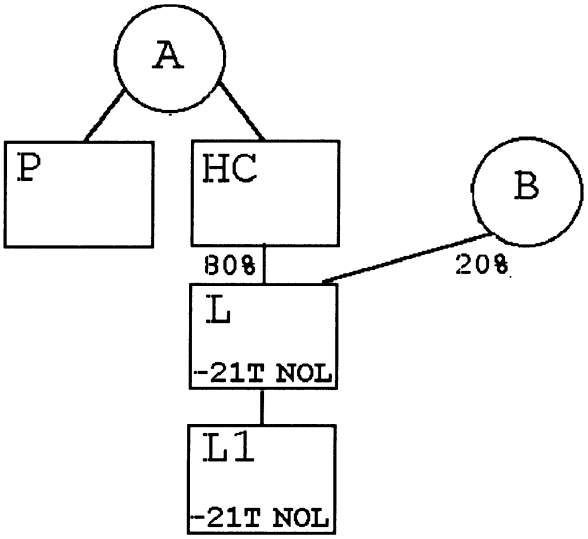

(b) February 5, Year 3, is a testing date for HC as the loss subgroup parent with respect to the net operating loss carryovers of L and L1 from Year 1. See paragraph (b)(1)(ii)(B) of this section. For purposes of determining whether HC has an ownership change on the testing date, appropriate adjustments must be made with respect to the changes in the percentage ownership of the stock of HC because HC was not the loss subgroup parent for at least 3 years prior to the day on which it became a member of the HC loss subgroup (a testing date). The appropriate adjustments include adjustments so that HC succeeds to the owner shifts of other members of the former group. Thus, HC succeeds to the owner shift of L that resulted from the sale of the 20 percent interest to B in determining whether the HC loss subgroup has an ownership change on February 5, Year 3, and

on any subsequent testing date that includes January 19, Year 2.

(4) *End of separate tracking of certain losses.* If §1.1502–96A(a) (relating to the end of separate tracking of attributes) applies to a loss subgroup, then, while one or more members that were included in the loss subgroup remain members of the consolidated group, there is an ownership change with respect to their attributes described in §1.1502–96A(a)(2) only if the consolidated group is a loss group and has an ownership change under paragraph (b)(1)(i) of this section (or such a member has an ownership change under §1.1502–96A(b) (relating to ownership changes of subsidiaries)). If, however, the loss subgroup has had an ownership change before §1.1502–96A(a) applies, see §1.1502–96A(c) for the continuing application of the subgroup's section 382 limitation with respect to its prechange subgroup attributes.

(c) *Supplemental rules for determining ownership change*—(1) *Scope.* This paragraph (c) contains a supplemental rule for determining whether there is an ownership change of a loss group (or loss subgroup). It applies in addition to, and not instead of, the rules of paragraph (b) of this section. Thus, for example, if the common parent of the loss group has an ownership change under paragraph (b) of this section, the loss group has an ownership change even if, by applying this paragraph (c), the common parent would not have an ownership change.

(2) *Cause for applying supplemental rule.* This paragraph (c) applies to a loss group (or loss subgroup) if—

(i) Any 5-percent shareholder of the common parent (or loss subgroup parent) increases its percentage ownership interest in the stock of both—

(A) A subsidiary of the loss group (or loss subgroup) other than by a direct or indirect acquisition of stock of the common parent (or loss subgroup parent); and

(B) The common parent (or loss subgroup parent); and

(ii) Those increases occur within a 3 year period ending on any day of a consolidated return year or, if shorter, the period beginning on the first day following the most recent ownership change of the loss group (or loss subgroup).

(3) *Operating rules.* Solely for purposes of this paragraph (c)—

(i) A 5-percent shareholder of the common parent (or loss subgroup parent) is treated as increasing its percentage ownership interest in the common parent (or loss subgroup parent) or a subsidiary to the extent, if any, that any person acting pursuant to a plan or arrangement with the 5-percent shareholder increases its percentage ownership interest in the stock of that entity;

(ii) The rules in section 382(l)(3) and §§1.382–2T(h) and 1.382–4(d) (relating to constructive ownership) apply with respect to the stock of the subsidiary by treating such stock as stock of a loss corporation; and

(iii) In the case of a loss subgroup, a subsidiary includes any member of the loss subgroup other than the loss subgroup parent. (The loss subgroup parent is, however, a subsidiary of the loss group of which it is a member.)

(4) *Supplemental ownership change rules.* The determination whether the common parent (or loss subgroup parent) has an ownership change is made by applying paragraph (b)(1) of this section as modified by the following additional rules—

(i) *Additional testing dates for the common parent (or loss subgroup parent).* A testing date for the common parent (or loss subgroup parent) also includes—

(A) Each day on which there is an increase in the percentage ownership of stock of a subsidiary as described in paragraph (c)(2) of this section; and

(B) The first day of the first consolidated return year for which the group is a loss group (or the members compose a loss subgroup);

(ii) *Treatment of subsidiary stock as stock of the common parent (or loss subgroup parent).* The common parent (or loss subgroup parent) is treated as though it had issued to the person acquiring (or deemed to acquire) the subsidiary stock an amount of its own stock (by value) that equals the value of the subsidiary stock represented by the percentage increase in that person's ownership of the subsidiary (determined on a separate entity basis). A similar principle applies if the increase

in percentage ownership interest is effected by a redemption or similar transaction; and

(iii) *5-percent shareholder of the common parent (or loss subgroup parent).* Any person described in paragraph (c)(3)(i) of this section who is acting pursuant to the plan or arrangement is treated as a 5-percent shareholder of the common parent (or loss subgroup parent).

(5) *Examples.* The following examples illustrate the principles of this paragraph (c).

Example 1. Stock of the common parent under supplemental rules. (a) A owns all the L stock. L is not a member of an affiliated group and has a net operating loss carryover arising in Year 1 that is carried over to Year 6. On September 20, Year 6, L transfers all of its assets and liabilities to a newly created subsidiary, S, in exchange for S stock. L and S thereafter file consolidated returns. On November 23, Year 6, B contributes cash to L in exchange for a 45 percent ownership interest in L and contributes cash to S for a 20 percent ownership interest in S.

(b) B is a 5-percent shareholder of L who increases his percentage ownership interest in L and S during the 3 year period ending on November 23, Year 6. Under paragraph (c)(4)(ii) of this section, the determination whether L (the common parent of a loss group) has an ownership change on November 23, Year 6 (or on any testing date in the testing period which includes November 23, Year 6), is made by applying paragraph (b)(1)(i) of this section and by treating the value of B's 20 percent ownership interest in S as if it were L stock issued to B.

Example 2. Plan or arrangement—public offering of subsidiary stock. (a) A owns all the stock of L and L owns all the stock of L1. The L group has a consolidated net operating loss arising in Year 1 that resulted from the operations of L1 and that is carried over to Year 2. As part of a plan, A sells 49 percent of the L stock to B on October 7, Year 2, and L1 issues new stock representing a 20 percent ownership interest in L1 to the public on November 6, Year 2. The following is a graphic illustration of these facts:

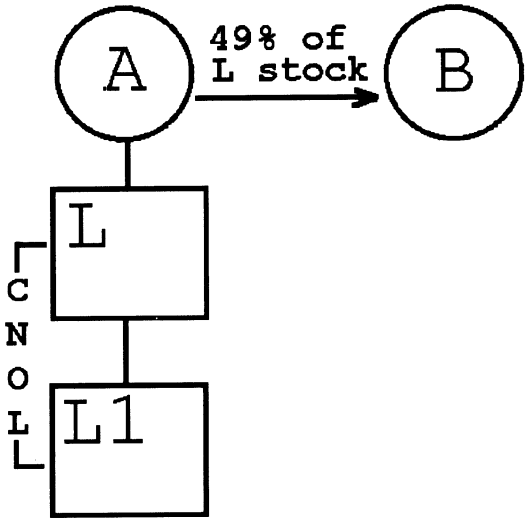

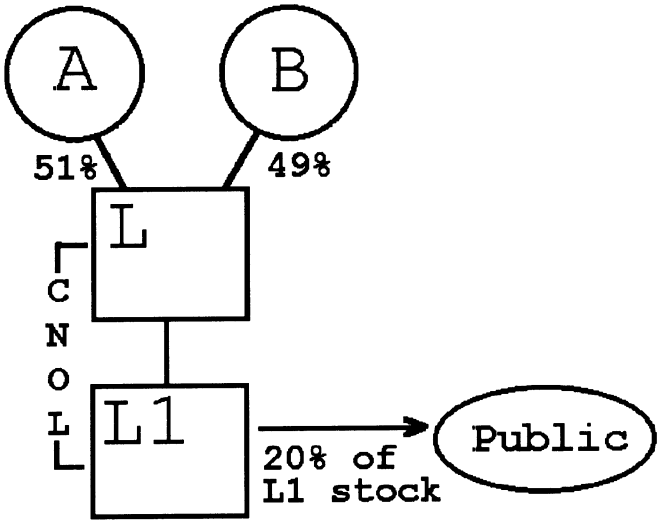

(b) A's sale of the L stock to B does not cause an ownership change of the L loss group on October 7, Year 2, under the rules of § 1.382–2T and paragraph (b)(1)(i) of this section.

(c) Because the issuance of L1 stock to the public occurs in connection with B's acquisition of L stock pursuant to a plan, paragraph (c)(4) of this section applies to determine whether the L loss group has an ownership change on November 6, Year 2 (or on any testing date for which the testing period includes November 6, Year 2).

(d) *Testing period following ownership change under this section.* If a loss group (or a loss subgroup) has had an ownership change under this section, the

testing period for determining a subsequent ownership change with respect to pre-change consolidated attributes (or pre-change subgroup attributes) begins no earlier than the first day following the loss group's (or loss subgroup's) most recent change date.

(e) *Information statements*—(1) *Common parent of a loss group.* The common parent of a loss group must file the information statement required by §1.382–2T(a)(2)(ii) for a consolidated return year because of any owner shift, equity structure shift, or the issuance or transfer of an option—

(i) With respect to the common parent and with respect to any subsidiary stock subject to paragraph (c) of this section; and

(ii) With respect to an ownership change described in §1.1502–96A(b) (relating to ownership changes of subsidiaries).

(2) *Abbreviated statement with respect to loss subgroups.* The common parent of a consolidated group that has a loss subgroup during a consolidated return year must file the information statement required by §1.382–2T(a)(2)(ii) because of any owner shift, equity structure shift, or issuance or transfer of an option with respect to the loss subgroup parent and with respect to any subsidiary stock subject to paragraph (c) of this section. Instead of filing a separate statement for each loss subgroup parent, the common parent (which is treated as a loss corporation) may file the single statement described in paragraph (e)(1) of this section. In addition to the information concerning stock ownership of the common parent, the single statement must identify each loss subgroup parent and state which loss subgroups, if any, have had ownership changes during the consolidated return year. The loss subgroup parent is, however, still required to maintain the records necessary to determine if the loss subgroup has an ownership change. This paragraph (e)(2) applies with respect to the attributes of a loss subgroup until, under §1.1502–96A(a), the attributes are no longer treated as described in §1.1502–91A(d) (relating to the definition of loss subgroup). After that time, the information statement described in paragraph (e)(1) of this section must be filed with respect to those attributes.

[T.D. 8678, 61 FR 33341, June 27, 1996, as amended by T.D. 8823, 64 FR 36100, July 2, 1999. Redesignated and amended by T.D. 8824, 64 FR 36125, 36127, July 2, 1999]

§1.1502–93A Consolidated section 382 limitation (or subgroup section 382 limitation) generally applicable for testing dates before June 25, 1999.

(a) *Determination of the consolidated section 382 limitation (or subgroup section 382 limitation)*—(1) *In general.* Following an ownership change, the consolidated section 382 limitation (or subgroup section 382 limitation) for any post-change year is an amount equal to the value of the loss group (or loss subgroup), as defined in paragraph (b) of this section, multiplied by the long-term tax-exempt rate that applies with respect to the ownership change, and adjusted as required by section 382 and the regulations thereunder. See, for example, section 382(b)(2) (relating to the carryforward of unused section 382 limitation), section 382(b)(3)(B) (relating to the section 382 limitation for the post-change year that includes the change date), section 382(m)(2) (relating to short taxable years), and section 382(h) (relating to recognized built-in gains and section 338 gains).

(2) *Coordination with apportionment rule.* For special rules relating to apportionment of a consolidated section 382 limitation (or a subgroup section 382 limitation) when one or more corporations cease to be members of a loss group (or a loss subgroup) and to aggregation of amounts so apportioned, see §1.1502–95A(c).

(b) *Value of the loss group (or loss subgroup)*—(1) *Stock value immediately before ownership change.* Subject to any adjustment under paragraph (b)(2) of this section, the value of the loss group (or loss subgroup) is the value, immediately before the ownership change, of the stock of each member, other than stock that is owned directly or indirectly by another member. For this purpose—

(i) Ownership is determined under §1.382–2T;

(ii) A member is considered to indirectly own stock of another member

through a nonmember only if the member has a 5-percent or greater ownership interest in the nonmember; and

(iii) Stock includes stock described in section 1504(a)(4) and §1.382–2T(f)(18)(ii) and (iii).

(2) *Adjustment to value.* The value of the loss group (or loss subgroup), as determined under paragraph (b)(1) of this section, is adjusted under any rule in section 382 or the regulations thereunder requiring an adjustment to such value for purposes of computing the amount of the section 382 limitation. See, for example, section 382(e)(2) (redemptions and corporate contractions), section 382(l)(1) (certain capital contributions) and section 382(l)(4) (ownership of substantial nonbusiness assets). The value of the loss group (or loss subgroup) determined under this paragraph (b) is also adjusted to the extent necessary to prevent any duplication of the value of the stock of a member. For example, the principles of §1.382–8 (relating to controlled groups of corporations) apply in determining the value of a loss group (or loss subgroup) if, under §1.1502–91A(g)(2), members are not included in the determination whether the group (or loss subgroup) has a net unrealized built-in loss.

(3) *Examples.* The following examples illustrate the principles of this paragraph (b).

Example 1. Basic case. (a) L, L1, and L2 compose a loss group. L has outstanding common stock, the value of which is $100. L1 has outstanding common stock and preferred stock that is described in section 1504(a)(4). L owns 90 percent of the L1 common stock, and A owns the remaining 10 percent of the L1 common stock plus all the preferred stock. The value of the L1 common stock is $40, and the value of the L1 preferred stock is $30. L2 has outstanding common stock, 50 percent of which is owned by L and 50 percent by L1. The L group has an ownership change. The following is a graphic illustration of these facts:

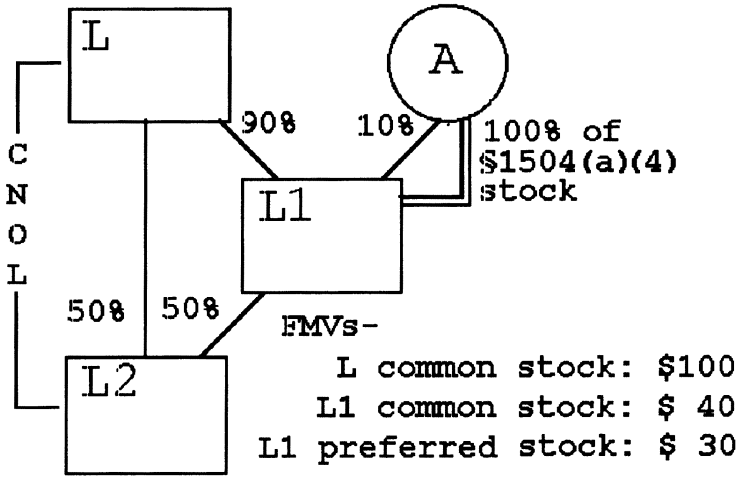

(b) Under paragraph (b)(1) of this section, the L group does not include the value of the stock of any member that is owned directly or indirectly by another member in computing its consolidated section 382 limitation. Accordingly, the value of the stock of the loss group is $134, the sum of the value of—

(1) The common stock of L ($100);

(2) the 10 percent of the L1 common stock ($4) owned by A; and

(3) The L1 preferred stock ($30) owned by A.

Example 2. Indirect ownership. (a) L and L1 compose a consolidated group. L's stock has a value of $100. L owns 80 shares (worth $80) and corporation M owns 20 shares (worth $20) of the L1 stock. L also owns 79 percent of the stock of corporation M. The L group has an ownership change. The following is a graphic illustration of these facts:

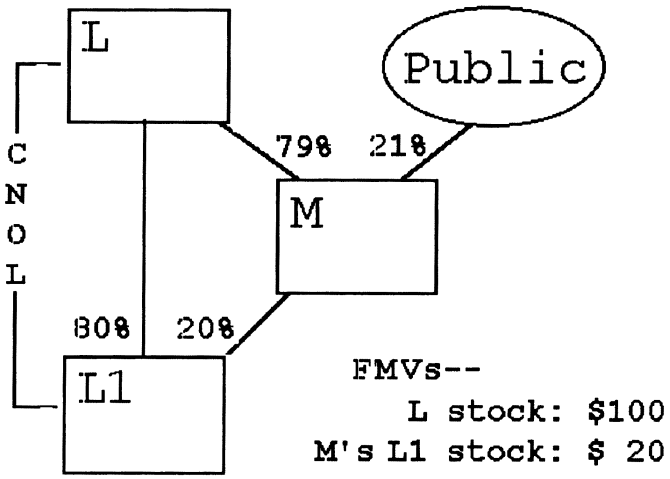

(b) Under paragraph (b)(1) of this section, because of L's more than 5 percent ownership interest in M, a nonmember, L is considered to indirectly own 15.8 shares of the L1 stock held by M (79% × 20 shares). The value of the L loss group is $104.20, the sum of the values of—

(1) The L stock ($100); and

(2) The L1 stock not owned directly or indirectly by L (21% × $20, or $4.20).

(c) *Recognized built-in gain of a loss group or loss subgroup.* If a loss group (or loss subgroup) has a net unrealized built-in gain, any recognized built-in gain of the loss group (or loss subgroup) is taken into account under section 382(h) in determining the consolidated section 382 limitation (or subgroup section 382 limitation). See § 1.1502–99A(a)(2) for a special rule relating to the application of § 1.502–93(c)(2) to consolidated return years for which the due date of the return is after June 25, 1999.

(d) *Continuity of business*—(1) *In general.* A loss group (or a loss subgroup) is treated as a single entity for purposes of determining whether it satisfies the continuity of business enterprise requirement of section 382(c)(1).

(2) *Example.* The following example illustrates the principle of this paragraph (d).

Example. Continuity of business enterprise. L owns all the stock of two subsidiaries, L1 and L2. The L group has an ownership change. It has pre-change consolidated attributes attributable to L2. Each of the members has historically conducted a separate line of business. Each line of business is approximately equal in value. One year after the ownership change, L discontinues its separate business and the business of L2. The separate business of L1 is continued for the remainder of the 2 year period following the ownership change. The continuity of business enterprise requirement of section 382(c)(1) is met even though the separate businesses of L and L2 are discontinued.

(e) *Limitations of losses under other rules.* If a section 382 limitation for a post-change year exceeds the consolidated taxable income that may be offset by pre-change attributes for any reason, including the application of the limitation of § 1.1502–21(c) or 1.1502–21T(c) in effect prior to June 25, 1999, as contained in 26 CFR part 1 revised April 1, 1999, as applicable, the amount of the excess is carried forward under section 382(b)(2) (relating to the carryforward of unused section 382 limitation).

[T.D. 8678, 61 FR 33351, June 27, 1996, as amended by T.D. 8823, 64 FR 36100, July 2, 1999. Redesignated and amended by T.D. 8824, 64 FR 36125, 36128, July 2, 1999]

§ 1.1502–94A Coordination with section 382 and the regulations thereunder when a corporation becomes a member of a consolidated group) generally applicable for corporations becoming members of a group before June 25, 1999.

(a) *Scope*—(1) *In general*. This section applies section 382 and the regulations thereunder to a corporation that is a new loss member of a consolidated group. A corporation is a new loss member if it—

(i) Carries over a net operating loss that arose (or is treated under § 1.1502–21(c) or 1.1502–21T(c) in effect prior to June 25, 1999, as contained in 26 CFR part 1 revised April 1, 1999, as applicable, as arising) in a SRLY with respect to the current group, and that is not described in § 1.1502–91A(d)(1); or

(ii) Has a net unrealized built-in loss (determined under paragraph (c) of this section on the day it becomes a member of the current group by treating that day as a change date) that is not taken into account under § 1.1502–91A(d)(2) in determining whether two or more corporations compose a loss subgroup.

(2) *Successor corporation as new loss member*. A new loss member also includes any successor to a corporation that has a net operating loss carryover arising in a SRLY and that is treated as remaining in existence under § 1.382–2(a)(1)(ii) following a transaction described in section 381(a).

(3) *Coordination in the case of a loss subgroup*. For rules regarding the determination of whether there is an ownership change of a loss subgroup with respect to a net operating loss or a net unrealized built-in loss described in § 1.1502–91A(d) (relating to the definition of loss subgroup) and the computation of a subgroup section 382 limitation following such an ownership change, see §§ 1.1502–92A and 1.1502–93A.

(4) *End of separate tracking of certain losses*. If § 1.1502–96A(a) (relating to the end of separate tracking of attributes) applies to a new loss member, then, while that member remains a member of the consolidated group, there is an ownership change with respect to its attributes described in § 1.1502–96A(a)(2) only if the consolidated group is a loss group and has an ownership change under § 1.1502–92A(b)(1)(i) (or that member has an ownership change under § 1.1502–96A(b) (relating to ownership changes of subsidiaries)). If, however, the new loss member has had an ownership change before § 1.1502–96A(a) applies, see § 1.1502–96A(c) for the continuing application of the section 382 limitation with respect to the member's pre-change losses.

(5) *Cross-reference*. See section 382(a) and § 1.1502–96A(c) for the continuing effect of an ownership change after a corporation becomes or ceases to be a member.

(b) *Application of section 382 to a new loss member*—(1) *In general*. Section 382 and the regulations thereunder apply to a new loss member to determine, on a separate entity basis, whether and to what extent a section 382 limitation applies to limit the amount of consolidated taxable income that may be offset by the new loss member's pre-change separate attributes. For example, if an ownership change with respect to the new loss member occurs under section 382 and the regulations thereunder, the amount of consolidated taxable income for any post-change year that may be offset by the new loss member's pre-change separate attributes shall not exceed the section 382 limitation as determined separately under section 382(b) with respect to that member for such year. If the post-change year includes the change date, section 382(b)(3)(A) is applied so that the section 382 limitation of the new loss member does not apply to the portion of the taxable income for such year that is allocable to the period in such year on or before the change date. See generally § 1.382–6 (relating to the allocation of income and loss).

(2) *Adjustment to value*. The value of the new loss member is adjusted to the extent necessary to prevent any duplication of the value of the stock of a member. For example, the principles of § 1.382–8T (relating to controlled groups of corporations) apply in determining the value of a new loss member.

(3) *Pre-change separate attribute defined*. A pre-change separate attribute of a new loss member is—

(i) Any net operating loss carryover of the new loss member described in paragraph (a)(1) of this section; and

(ii) Any recognized built-in loss of the new loss member.

(4) *Examples*. The following examples illustrate the principles of this paragraph (b).

Example 1. Basic case. (a) A and P each own 50 percent of the L stock. On December 19, Year 6, P purchases 30 percent of the L stock from A for cash. L has net operating losses arising in Year 1 and Year 2 that it carries over to Year 6 and Year 7. The following is a graphic illustration of these facts:

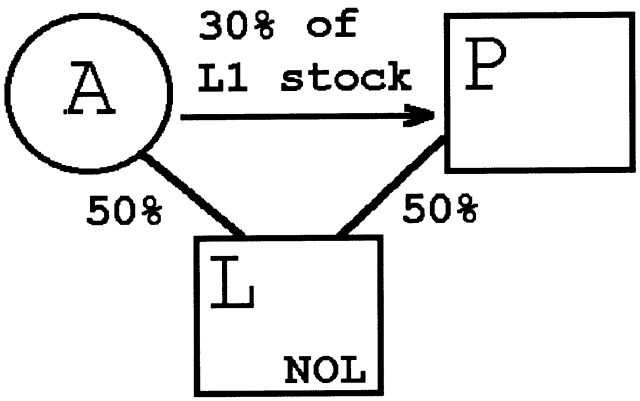

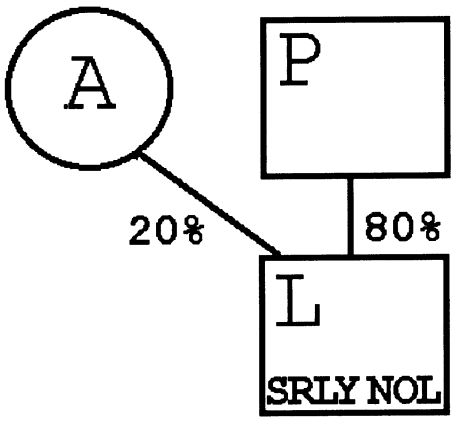

(b) L is a new loss member because it has net operating loss carryovers that arose in a SRLY with respect to the P group and L is not a member of a loss subgroup under §1.1502–91A(d). Under section 382 and the regulations thereunder, L is a loss corporation on December 19, Year 6, that day is a testing date for L, and the testing period for L commences on December 20, Year 3.

(c) P's purchase of L stock does not cause an ownership change of L on December 19, Year 6, with respect to the net operating loss carryovers from Year 1 and Year 2 under section 382 and §1.382–2T. The use of the loss carryovers, however, is subject to limitation under §1.1502–21(c) or 1.1502–21T(c) in effect prior to June 25, 1999, as contained in 26 CFR part 1 revised April 1, 1999, as applicable.

Example 2. Multiple new loss members. (a) The facts are the same as in *Example 1*, and, on December 31, Year 6, L purchases all the stock of L1 from B for cash. L1 has a net operating loss of $40 arising in Year 3 that it carries over to Year 7. The following is a graphic illustration of these facts:

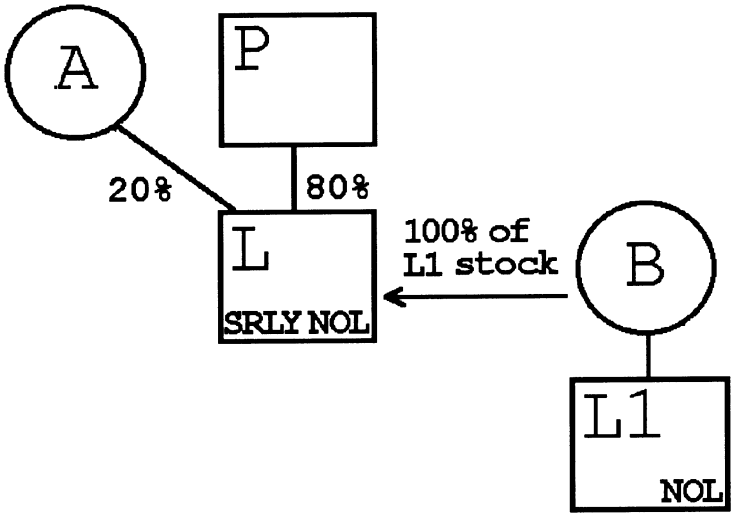

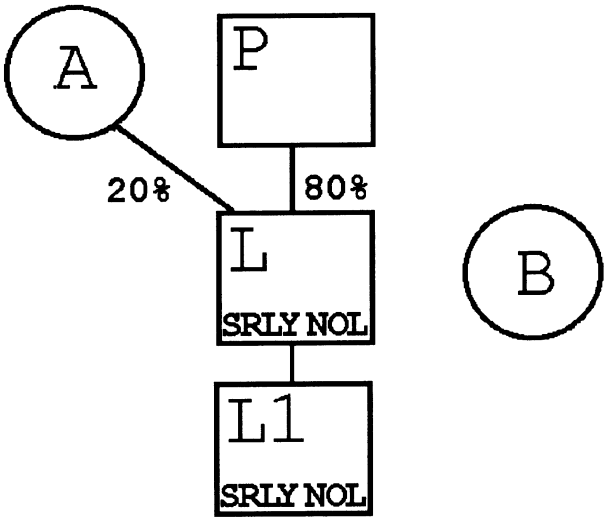

(b) L1 is a new loss member because it has a net operating loss carryover from Year 3 that arose in a SRLY with respect to the P group and L1 is not a member of a loss subgroup under § 1.1502–91A(d)(1).

(c) L's purchase of all the stock of L1 causes an ownership change of L1 on December 31, Year 6, under section 382 and § 1.382–2T. Accordingly, a section 382 limitation based on the value of the L1 stock immediately before the ownership change limits the amount of consolidated taxable income of the P group for any post-change year that may be offset by L1's loss from Year 3.

(d) L1's ownership change in connection with its becoming a member of the P group is an ownership change described in § 1.1502–96A(a). Thus, starting on January 1, Year 7, the P group no longer separately tracks owner shifts of the stock of L1 with respect to L1's loss from Year 3. Instead, the P group is a loss group because of such loss under § 1.1502–91A(c).

Example 3. Ownership changes of new loss members. (a) The facts are the same as in *Example 2*, and, on April 30, Year 7, C purchases all the stock of P for cash.

(b) L is a new loss member on April 30, Year 7, because its Year 1 and Year 2 losses arose in SRLYs with respect to the P group and it is not a member of a loss subgroup under § 1.1502–91A(d)(1). The testing period for L commences on May 1, Year 4. C's purchase of all the P stock causes an ownership change of L on April 30, Year 7, under section 382 and § 1.382–2T with respect to its Year 1 and Year 2 losses. Accordingly, a section 382 limitation based on the value of the L stock immediately before the ownership change limits the amount of consolidated taxable income of the P group for any post-change year that may be offset by L's Year 1 and Year 2 losses. See also § 1.1502–21T in effect prior to June 25, 1999, contained in 26 CFR Part 1, revised April 1, 1999, or § 1.1502–21, as applicable.

(c) The P group is a loss group on April 30, Year 7, because it is entitled to use L1's loss from Year 3, and such loss is no longer treated as a loss of a new loss member starting the day after L1's ownership change on December 31, Year 6. See §§ 1.1502–96A(a) and 1.1502–91A(c)(2). C's purchase of all the P stock causes an ownership change of P, and therefore the P loss group, on April 30, Year 7, with respect to L1's Year 3 loss. Accordingly, a consolidated section 382 limitation based on the value of the P stock immediately before the ownership change limits the amount of consolidated taxable income of the P group for any post-change year that may be offset by L1's Year 3 loss.

(c) *Built-in gains and losses.* As the context may require, the principles of §§ 1.1502–91A(g) and (h) and 1.1502–93A(c) (relating to built-in gains and losses) apply to a new loss member on a separate entity basis. See § 1.1502–91A(g)(3).

(d) *Information statements.* The common parent of a consolidated group that has a new loss member subject to paragraph (b)(1) of this section during a consolidated return year must file the information statement required by § 1.382–2T(a)(2)(ii) because of any owner shift, equity structure shift, or issuance or transfer of an option with respect to the new loss member. Instead of filing a separate statement for each new loss member the common parent may file a single statement described in § 1.382–2T(a)(2)(ii) with respect to the stock ownership of the common parent (which is treated as a loss corporation). In addition to the information concerning stock ownership of the common parent, the single statement must identify each new loss member and state which new loss members, if any, have had ownership changes during the consolidated return year. The new loss member is, however, required to maintain the records necessary to determine if it has an ownership change. This paragraph (d) applies with respect to the attributes of a new loss member until an event occurs which ends separate tracking under § 1.1502–96A(a). After that time, the information statement described in § 1.1502–92A(e)(1) must be filed with respect to these attributes.

[T.D. 8678, 61 FR 33352, June 27, 1996, as amended by T.D. 8823, 64 FR 36100, July 2, 1999. Redesignated and amended by T.D. 8824, 64 FR 36125, 36126, 36128, July 2, 1999]

§ 1.1502–95A Rules on ceasing to be a member of a consolidated group generally applicable for corporations ceasing to be members before June 25, 1999.

(a) *In general*—(1) *Consolidated group.* This section provides rules for applying section 382 on or after the day that a member ceases to be a member of a consolidated group (or loss subgroup). The rules concern how to determine whether an ownership change occurs with respect to losses of the member, and how a consolidated section 382 limitation (or subgroup section 382 limitation) is apportioned to the member. As the context requires, a reference in this section to a loss group, a member, or a

corporation also includes a reference to a loss subgroup, and a reference to a consolidated section 382 limitation also includes a reference to a subgroup section 382 limitation.

(2) *Election by common parent.* Only the common parent (not the loss subgroup parent) may make the election under paragraph (c) of this section to apportion either a consolidated section 382 limitation or a subgroup section 382 limitation.

(3) *Coordination with §§ 1.1502–91A through 1.1502–93A.* For rules regarding the determination of whether there is an ownership change of a loss subgroup and the computation of a subgroup section 382 limitation following such an ownership change, see §§ 1.1502–91A through 1.1502–93A.

(b) *Separate application of section 382 when a member leaves a consolidated group*—(1) *In general.* Except as provided in §§ 1.1502–91A through 1.1502–93A (relating to rules applicable to loss groups and loss subgroups), section 382 and the regulations thereunder apply to a corporation on a separate entity basis after it ceases to be a member of a consolidated group (or loss subgroup). Solely for purposes of determining whether a corporation has an ownership change—

(i) Any portion of a consolidated net operating loss that is apportioned to the corporation under § 1.1502–21(b) or 1.1502–21T(b) in effect prior to June 25, 1999, as contained in 26 CFR part 1 revised April 1, 1999, as applicable is treated as a net operating loss of the corporation beginning on the first day of the taxable year in which the loss arose;

(ii) The testing period may include the period during which (or before which) the corporation was a member of the group (or loss subgroup); and

(iii) Except to the extent provided in § 1.1502–20(g) (relating to reattributed losses), the day it ceases to be a member of a consolidated group is treated as a testing date of the corporation within the meaning of § 1.382–2(a)(4).

(2) *Effect of a prior ownership change of the group.* If a loss group has had an ownership change under § 1.1502–92A before a corporation ceases to be a member of a consolidated group (the former member)—

(i) Any pre-change consolidated attribute that is subject to a consolidated section 382 limitation continues to be treated as a pre-change loss with respect to the former member after the attribute is apportioned to the former member;

(ii) The former member's section 382 limitation with respect to such attribute is zero except to the extent the common parent apportions under paragraph (c) of this section all or a part of the consolidated section 382 limitation to the former member;

(iii) The testing period for determining a subsequent ownership change with respect to such attribute begins no earlier than the first day following the loss group's most recent change date; and

(iv) As generally provided under section 382, an ownership change of the former member that occurs on or after the day it ceases to be a member of a loss group may result in an additional, lesser limitation amount with respect to such loss.

(3) *Application in the case of a loss subgroup.* If two or more former members are included in the same loss subgroup immediately after they cease to be members of a consolidated group, the principles of paragraphs (b) and (c) of this section apply to the loss subgroup. Therefore, for example, an apportionment by the common parent under paragraph (c) of this section is made to the loss subgroup rather than separately to its members.

(4) *Examples.* The following examples illustrate the principles of this paragraph (b).

Example 1. Treatment of departing member as a separate corporation throughout the testing period. (a) A owns all the L stock. L owns all the stock of L1 and L2. The L group has a consolidated net operating loss arising in Year 1 that is carried over to Year 3. On January 12, Year 2, A sells 30 percent of the L stock to B. On February 7, Year 3, L sells 40 percent of the L2 stock to C, and L2 ceases to be a member of the group. A portion of the Year 1 consolidated net operating loss is apportioned to L2 under § 1.1502–21(b) or 1.1502–21T(b) in effect prior to June 25, 1999, as contained in 26 CFR part 1 revised April 1, 1999, as applicable and is carried to L2's first separate return year, which ends December 31, Year 3. The following is a graphic illustration of these facts:

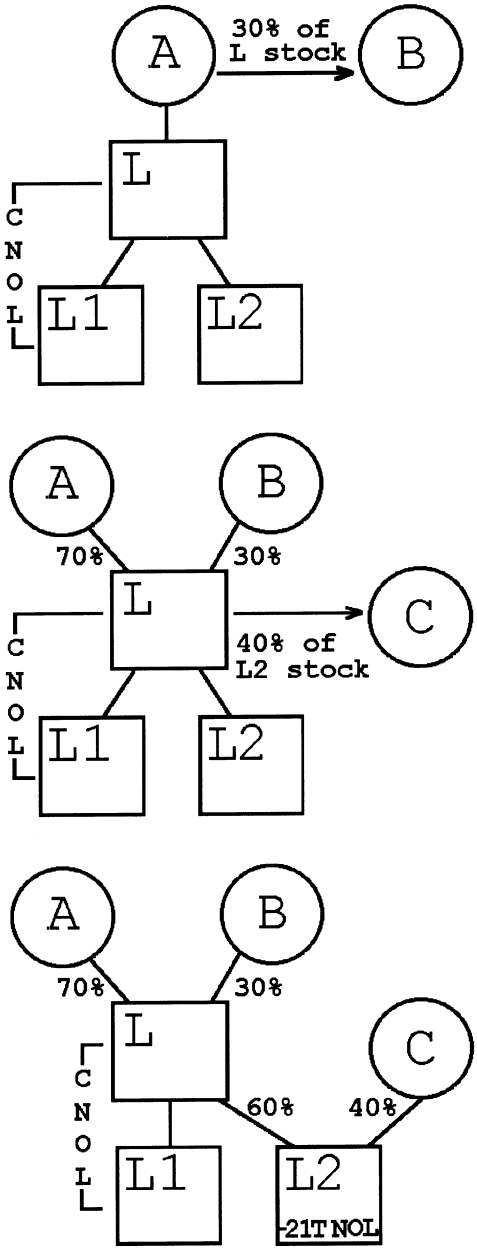

(b) Under paragraph (b)(1) of this section, L2 is a loss corporation on February 7, Year 3. Under paragraph (b)(1)(iii) of this section, February 7, Year 3, is a testing date. Under paragraph (b)(1)(ii) of this section, the testing period for L2 with respect to this testing date commences on January 1, Year 1, the first day of the taxable year in which the

portion of the consolidated net operating loss apportioned to L2 arose. Therefore, in determining whether L2 has an ownership change on February 7, Year 3, B's purchase of 30 percent of the L stock and C's purchase of 40 percent of the L2 stock are each owner shifts. L2 has an ownership change under section 382(g) and §1.382–2T because B and C have increased their ownership interests in L2 by 18 and 40 percentage points, respectively, during the testing period.

Example 2. Effect of prior ownership change of loss group. (a) L owns all the L1 stock and L1 owns all the L2 stock. The L loss group had an ownership change under §1.1502–92A in Year 2 with respect to a consolidated net operating loss arising in Year 1 and carried over to Year 2 and Year 3. The consolidated section 382 limitation computed solely on the basis of the value of the stock of L is $100. On December 31, Year 2, L1 sells 25 percent of the stock of L2 to B. L2 is apportioned a portion of the Year 1 consolidated net operating loss which it carries over to its first separate return year ending after December 31, Year 2. L2's separate section 382 limitation with respect to this loss is zero unless L elects to apportion all or a part of the consolidated section 382 limitation to L2. (See paragraph (c) of this section for rules regarding the apportionment of a consolidated section 382 limitation.) L apportions $50 of the consolidated section 382 limitation to L2.

(b) On December 31, Year 3, L1 sells its remaining 75 percent stock interest in L2 to C, resulting in an ownership change of L2. L2's section 382 limitation computed on the change date with respect to the value of its stock is $30. Accordingly, L2's section 382 limitation for post-change years ending after December 31, Year 3, with respect to its pre-change losses, including the consolidated net operating losses apportioned to it from the L group, is $30, adjusted as required by section 382 and the regulations thereunder.

(c) *Apportionment of a consolidated section 382 limitation*—(1) *In general.* The common parent may elect to apportion all or any part of a consolidated section 382 limitation to a former member (or loss subgroup). See paragraph (e) of this section for the time and manner of making the election to apportion.

(2) *Amount of apportionment.* The common parent may apportion all or part of each element of the consolidated section 382 limitation determined under §1.1502–93A. For this purpose, the consolidated section 382 limitation consists of two elements—

(i) The value element, which is the element of the limitation determined under section 382(b)(1) (relating to value multiplied by the long-term tax-exempt rate) without regard to such adjustments as those described in section 382(b)(2) (relating to the carryforward of unused section 382 limitation), section 382(b)(3)(B) (relating to the section 382 limitation for the post-change year that includes the change date), section 382(h) (relating to built-in gains and section 338 gains), and section 382(m)(2) (relating to short taxable years); and

(ii) The adjustment element, which is so much (if any) of the limitation for the taxable year during which the former member ceases to be a member of the consolidated group that is attributable to a carryover of unused limitation under section 382(b)(2) or to recognized built-in gains under 382(h).

(3) *Effect of apportionment on the consolidated section 382 limitation.* The value element of the consolidated section 382 limitation for any post-change year ending after the day that a former member (or loss subgroup) ceases to be a member(s) is reduced to the extent that it is apportioned under this paragraph (c). The consolidated section 382 limitation for the post-change year in which the former member (or loss subgroup) ceases to be a member(s) is also reduced to the extent that the adjustment element for that year is apportioned under this paragraph (c).

(4) *Effect on corporations to which the consolidated section 382 limitation is apportioned.* The amount of the value element that is apportioned to a former member (or loss subgroup) is treated as the amount determined under section 382(b)(1) for purposes of determining the amount of that corporation's (or loss subgroup's) section 382 limitation for any taxable year ending after the former member (or loss subgroup) ceases to be a member(s). Appropriate adjustments must be made to the limitation based on the value element so apportioned for a short taxable year, carryforward of unused limitation, or any other adjustment required under section 382. The adjustment element apportioned to a former member (or loss subgroup) is treated as an adjustment under section 382(b)(2) or section

382(h), as appropriate, for the first taxable year after the member (or members) ceases to be a member (or members).

(5) *Deemed apportionment when loss group terminates.* If a loss group terminates, to the extent the consolidated section 382 limitation is not apportioned under paragraph (c)(1) of this section, the consolidated section 382 limitation is deemed to be apportioned to the loss subgroup that includes the common parent, or, if there is no loss subgroup that includes the common parent immediately after the loss group terminates, to the common parent. A loss group terminates on the first day of the first taxable year that is a separate return year with respect to each member of the former loss group.

(6) *Appropriate adjustments when former member leaves during the year.* Appropriate adjustments are made to the consolidated section 382 limitation for the consolidated return year during which the former member (or loss subgroup) ceases to be a member(s) to reflect the inclusion of the former member in the loss group for a portion of that year.

(7) *Examples.* The following examples illustrate the principles of this paragraph (c).

Example 1. Consequence of apportionment. (a) L owns all the L1 stock and L1 owns all the L2 stock. The L group has a $200 consolidated net operating loss arising in Year 1 that is carried over to Year 2. At the close of December 31, Year 1, the group has an ownership change under §1.1502–92A. The ownership change results in a consolidated section 382 limitation of $10 based on the value of the stock of the group. On August 29, Year 2, L1 sells 30 percent of the stock of L2 to A. L2 is apportioned $90 of the group's $200 consolidated net operating loss under §1.1502–21(b) or 1.1502–21T(b) in effect prior to June 25, 1999, as contained in 26 CFR part 1 revised April 1, 1999, as applicable. L, the common parent, elects to apportion $6 of the consolidated section 382 limitation to L2. The following is a graphic illustration of these facts:

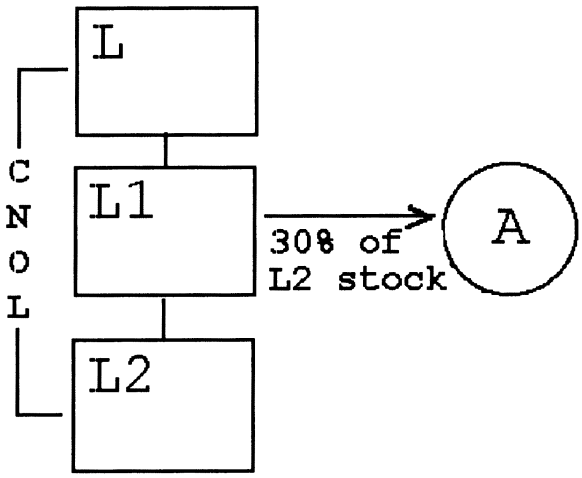

(b) For its separate return years ending after August 29, Year 2 (other than the taxable year ending December 31, Year 2), L2's section 382 limitation with respect to the $90 of the group's net operating loss apportioned to it is $6, adjusted, as appropriate, for any short taxable year, unused section 382 limitation, or other adjustment. For its consolidated return years ending after August 29, Year 2, (other than the year ending December 31, Year 2) the L group's consolidated section 382 limitation with respect to the remaining $110 of pre-change consolidated attribute is $4 ($10 minus the $6 value element apportioned to L2), adjusted, as appropriate, for any short taxable year, unused section 382 limitation, or other adjustment.

(c) For the L group's consolidated return year ending December 31, Year 2, the value element of its consolidated section 382 limitation is increased by $4 (rounded to the nearest dollar), to account for the period during which L2 was a member of the L group ($6, the consolidated section 382 limitation apportioned to L2, times 241/365, the ratio of the number of days during Year 2 that L2 is a member of the group to the number of days in the group's consolidated return year). See paragraph (c)(6) of this section. Therefore, the value element of the consolidated section 382 limitation for Year 2 of the L group is $8 (rounded to the nearest dollar).

(d) The section 382 limitation for L2's short taxable year ending December 31, Year 2, is $2 (rounded to the nearest dollar), which is the amount that bears the same relationship to $6, the value element of the consolidated section 382 limitation apportioned to L2, as the number of days during that short taxable year, 124 days, bears to 365. See §1.382–4(c).

Example 2. Consequence of no apportionment. The facts are the same as in *Example 1,* except that L does not elect to apportion any portion of the consolidated section 382 limitation to L2. For its separate return years ending after August 29, Year 2, L2's section 382 limitation with respect to the $90 of the group's pre-change consolidated attribute apportioned to L2 is zero under paragraph (b)(2)(ii) of this section. Thus, the $90 consolidated net operating loss apportioned to L2 cannot offset L2's taxable income in any of its separate return years ending after August 29, Year 2. For its consolidated return years ending after August 29, Year 2, the L group's consolidated section 382 limitation with respect to the remaining $110 of pre-change consolidated attribute is $10, adjusted, as appropriate, for any short taxable year, unused section 382 limitation, or other adjustment.

Example 3. Apportionment of adjustment element. The facts are the same as in *Example 1,* except that L2 ceases to be a member of the L group on August 29, Year 3, and the L group has a $4 carryforward of an unused consolidated section 382 limitation (under section 382(b)(2)) to the 1993 consolidated return year.

The carryover of unused limitation increases the consolidated section 382 limitation for the Year 3 consolidated return year from $10 to $14. L may elect to apportion all or any portion of the $10 value element and all or any portion of the $4 adjustment element to L2.

(d) *Rules pertaining to ceasing to be a member of a loss subgroup*—(1) *In general.* A corporation ceases to be a member of a loss subgroup—

(i) On the first day of the first taxable year for which it files a separate return; or

(ii) The first day that it ceases to bear a relationship described in section 1504(a)(1) to the loss subgroup parent (treating for this purpose the loss subgroup parent as the common parent described in section 1504(a)(1)(A)).

(2) *Examples.* The principles of this paragraph (d) are illustrated by the following examples.

Example 1. Basic case. (a) P owns all the L stock, L owns all the L1 stock and L1 owns all the L2 stock. The P group has a consolidated net operating loss arising in Year 1 that is carried over to Year 2. On December 11, Year 2, P sells all the stock of L to corporation M. Each of L, L1, and L2 is apportioned a portion of the Year 1 consolidated net operating loss, and thereafter each joins with M in filing consolidated returns. Under §1.1502–92A, the L loss subgroup has an ownership change on December 11, Year 2. The L loss subgroup has a subgroup section 382 limitation of $100. The following is a graphic illustration of these facts:

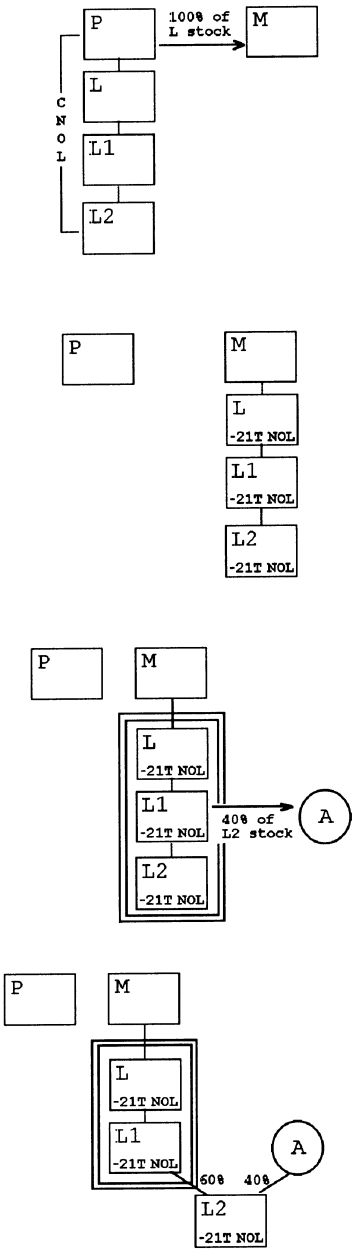

(b) On May 22, Year 3, L1 sells 40 percent of the L2 stock to A. L2 carries over a portion of the P group's net operating loss from Year 1 to its separate return year ending December 31, Year 3. Under paragraph (d)(1) of this section, L2 ceases to be a member of the L loss subgroup on May 22, Year 3, which is both (1) the first day of the first taxable year

for which it files a separate return and (2) the day it ceases to bear a relationship described in section 1504(a)(1) to the loss subgroup parent, L. The net operating loss of L2 that is carried over from the P group is treated as a pre-change loss of L2 for its separate return years ending after May 22, Year 3. Under paragraphs (a)(2) and (b)(2) of this section, the separate section 382 limitation with respect to this loss is zero unless M elects to apportion all or a part of the subgroup section 382 limitation of the L loss subgroup to L2.

Example 2. Formation of a new loss subgroup. The facts are the same as in *Example 1*, except that A purchases 40 percent of the L1 stock from L rather than purchasing L2 stock from L1. L1 and L2 file a consolidated return for their first taxable year ending after May 22, Year 3, and each of L1 and L2 carries over a part of the net operating loss of the P group that arose in Year 1. Under paragraph (d)(1) of this section, L1 and L2 cease to be members of the L loss subgroup on May 22, Year 3. The net operating losses carried over from the P group are treated as pre-change subgroup attributes of the loss subgroup composed of L1 and L2. The subgroup section 382 limitation with respect to those losses is zero unless M elects to apportion all or part of the subgroup section 382 limitation of the L loss subgroup to the L1 loss subgroup. The following is a graphic illustration of these facts:

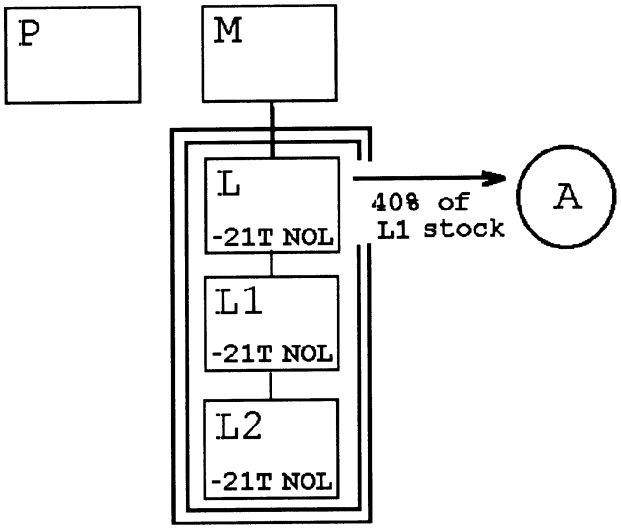

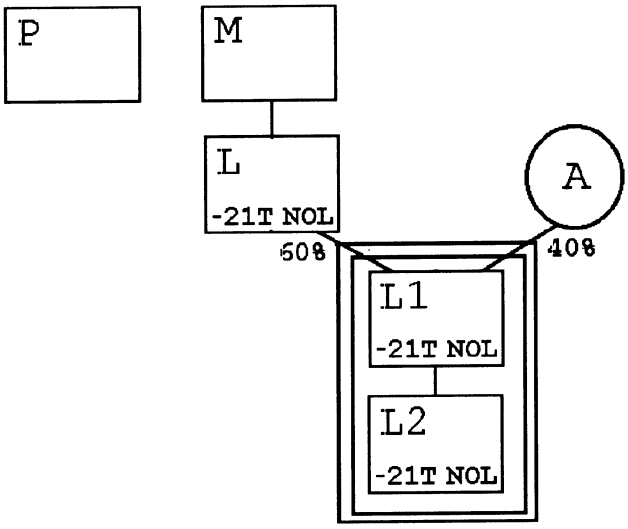

Example 3. Ceasing to bear a section 1504(a)(1) relationship to a loss subgroup parent. (a) A owns all the stock of P, and P owns all the stock of L1 and L2. The P group has a consolidated net operating loss arising in Year 1 that is carried over to Year 3 and Year 4. Corporation M acquires all the stock of P on November 11, Year 3, and P, L1, and L2 thereafter file consolidated returns with M. M's acquisition results in an ownership change of the P loss subgroup under §1.1502–92A(b)(1)(ii). The following is a graphic illustration of these facts:

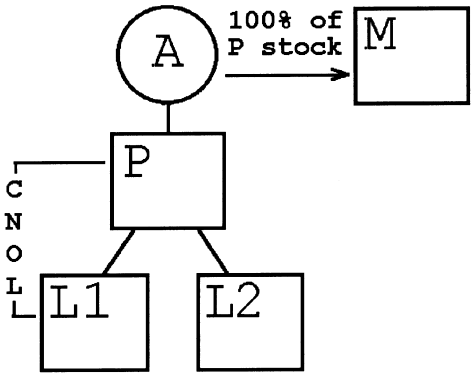

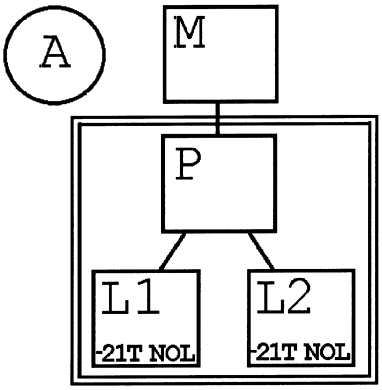

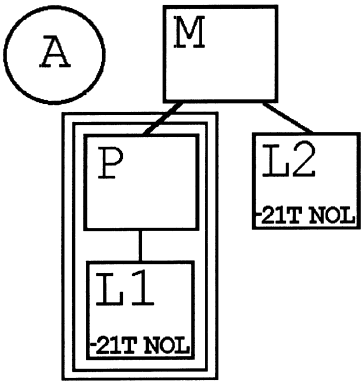

(b) P distributes the L2 stock to M on October 7, Year 4. L2 ceases to be a member of the P loss subgroup on October 7, Year 4, the first day that it ceases to bear the relationship described in section 1504(a)(1) to P, the P loss subgroup parent. See paragraph (d)(1)(ii) of this section. Thus, the section 382 limitation with respect to the pre-change

subgroup attributes attributable to L2 is zero except to the extent M elects to apportion all or a part of the subgroup section 382 limitation of the P loss subgroup to L2.

Example 4. Relationship through a successor. The facts are the same as in *Example 3*, except that, instead of P's distributing the stock of L2, L2 merges into L1 on October 7, Year 4. L1 (as successor to L2 in the merger within the meaning of §1.382–2T(f)(4)) continues to bear a relationship described in section 1504(a)(1) to P, the loss subgroup parent. Thus, L2 does not cease to be a member of the P loss subgroup as a result of the merger.

(e) *Filing the election to apportion*—(1) *Form of the election to apportion.* An election under paragraph (c) of this section must be made by the common parent. The election must be made in the form of the following statement: ''THIS IS AN ELECTION UNDER §1.1502–95A OF THE INCOME TAX REGULATIONS TO APPORTION ALL OR PART OF THE [insert either CONSOLIDATED SECTION 382 LIMITATION or SUBGROUP SECTION 382 LIMITATION, as appropriate] TO [insert name and E.I.N. of the corporation (or the corporations that compose a new loss subgroup) to which allocation is made]. The declaration must also include the following information, as appropriate—

(i) The date of the ownership change that resulted in the consolidated section 382 limitation (or subgroup section 382 limitation);

(ii) The amount of the consolidated section 382 limitation (or subgroup section 382 limitation) for the taxable year during which the former member (or new loss subgroup) ceases to be a member of the consolidated group (determined without regard to any apportionment under this section;

(iii) The amount of the value element and adjustment element of the consolidated section 382 limitation (or subgroup section 382 limitation) that is apportioned to the former member (or new loss subgroup) pursuant to paragraph (c) of this section; and

(iv) The name and E.I.N. of the common parent making the apportionment.

(2) *Signing of the election.* The election statement must be signed by both the common parent and the former member (or, in the case of a loss subgroup, the common parent and the loss subgroup parent) by persons authorized to sign their respective income tax returns.

(3) *Filing of the election.* The election statement must be filed by the common parent of the group that is apportioning the consolidated section 382 limitation (or the subgroup section 382 limitation) with its income tax return for the taxable year in which the former member (or new loss subgroup) ceases to be a member. The common parent must also deliver a copy of the statement to the former member (or the members of the new loss subgroup) on or before the day the group files its income tax return for the consolidated return year that the former member (or new loss subgroup) ceases to be a member. A copy of the statement must be attached to the first return of the former member (or the first return in which the members of a new loss subgroup join) that is filed after the close of the consolidated return year of the group of which the former member (or the members of a new loss subgroup) ceases to be a member.

(4) *Revocation of election.* An election statement made under paragraph (c) of this section is revocable only with the consent of the Commissioner.

[T.D. 8678, 61 FR 33355, June 27, 1996, as amended by T.D. 8823, 64 FR 36101, July 2, 1999. Redesignated and amended by T.D. 8824, 64 FR 36126, 36128, July 2, 1999]

§1.1502–96A Miscellaneous rules generally applicable for testing dates before June 25, 1999.

(a) *End of separate tracking of losses*—(1) *Application.* This paragraph (a) applies to a member (or a loss subgroup) with a net operating loss carryover that arose (or is treated under §1.1502–21(c) or 1.1502–21T(c) in effect prior to June 25, 1999, as contained in 26 CFR part 1 revised April 1, 1999, as applicable as arising) in a SRLY (or a net unrealized built-in gain or loss determined at the time that the member (or loss subgroup) becomes a member of the consolidated group if there is—

(i) An ownership change of the member (or loss subgroup in connection with, or after, becoming a member of the group; or

(ii) A period of 5 consecutive years following the day that the member (or loss subgroup) becomes a member of a group during which the member (or loss subgroup) has not had an ownership change.

(2) *Effect of end of separate tracking.* If this paragraph (a) applies with respect to a member (or loss subgroup), then, starting on the day after the earlier of the change date (but not earlier than the day the member (or loss subgroup) becomes a member of the consolidated group) or the last day of the 5 consecutive year period described in paragraph (a)(1)(ii) of this section, the member's net operating loss carryover that arose (or is treated under §1.1502–21(c) or 1.1502–21T(c) in effect prior to June 25, 1999, as contained in 26 CFR part 1 revised April 1, 1999, as applicable as arising) in a SRLY, is treated as described in §1.1502–91A(c)(1)(i). Also, the member's separately computed net unrealized built-in gain or loss is included in the determination whether the group has a net unrealized built-in gain or loss. The preceding sentences also apply for purposes of determining whether there is an ownership change with respect to such attributes following such change date (or earlier day) or 5 consecutive year period. Thus, for example, starting the day after the change date or the end of the 5 consecutive year period—

(i) The consolidated group which includes the new loss member or loss subgroup is no longer required to separately track owner shifts of the stock of the new loss member or loss subgroup parent to determine if an ownership change occurs with respect to the attributes of the new loss member or members included in the loss subgroup;

(ii) The group includes the member's attributes in determining whether it is a loss group under §1.1502–91A(c);

(iii) There is an ownership change with respect to such attributes only if the group is a loss group and has an ownership change; and

(iv) If the group has an ownership change, such attributes are pre-change consolidated attributes subject to the loss group's consolidated section 382 limitation.

(3) *Continuing effect of end of separate tracking.* As the context may require, a current group determines which of its members are included in a loss subgroup on any testing date by taking into account the application of this section in the former group. See the example in §1.1502–91A(f)(2).

(4) *Special rule for testing period.* For purposes of determining the beginning of the testing period for a loss group, the member's (or loss subgroup's) net operating loss carryovers (or net unrealized built-in gain or loss) described in paragraph (a)(2) of this section are considered to arise—

(i) In a case described in paragraph (a)(1)(i) of this section, in a taxable year that begins not earlier than the later of the day following the change date or the day that the member becomes a member of the group; and

(ii) in a case described in paragraph (a)(1)(ii) of this section, in a taxable year that begins 3 years before the end of the 5 consecutive year period.

(5) *Limits on effects of end of separate tracking.* The rule contained in this paragraph (a) applies solely for purposes of §§1.1502–91A through 1.1502–95A and this section (other than paragraph (b)(2)(ii)(B) of this section (relating to the definition of pre-change attributes of a subsidiary)) and §1.1502–98A, and not for purposes of other provisions of the consolidated return regulations, including, for example, §§1.1502–15 and 1.1502–21 (or §1.1502–15T in effect prior to June 25, 1999, as contained in 26 CFR part 1 revised April 1, 1999, and 1.1502–21T in effect prior to June 25, 1999, as contained in 26 CFR part 1 revised April 1, 1999, as applicable) (relating to the consolidated net operating loss deduction). See also paragraph (c) of this section for the continuing effect of an ownership change with respect to pre-change attributes.

(b) *Ownership change of subsidiary*—(1) *Ownership change of a subsidiary because of options or plan or arrangement.* Notwithstanding §1.1502–92A, a subsidiary may have an ownership change for purposes of section 382 with respect to its attributes which a group or loss subgroup includes in making a determination under §1.1502–91A(c)(1) (relating to the definition of loss group) or §1.1502–91A(d) (relating to the definition of loss subgroup). The subsidiary has such an

ownership change if it has an ownership change under the principles of §1.1502–95A(b) and section 382 and the regulations thereunder (determined on a separate entity basis by treating the subsidiary as not being a member of a consolidated group) in the event of—

(i) The deemed exercise under §1.382–4(d) of an option or options (other than an option with respect to stock of the common parent) held by a person (or persons acting pursuant to a plan or arrangement) to acquire more than 20 percent of the stock of the subsidiary; or

(ii) An increase by 1 or more 5-percent shareholders, acting pursuant to a plan or arrangement to avoid an ownership change of a subsidiary, in their percentage ownership interest in the subsidiary by more than 50 percentage points during the testing period of the subsidiary through the acquisition (or deemed acquisition pursuant to §1.382–4(d)) of ownership interests in the subsidiary and in higher-tier members with respect to the subsidiary.

(2) *Effect of the ownership change*—(i) *In general*. If a subsidiary has an ownership change under paragraph (b)(1) of this section, the amount of consolidated taxable income for any post-change year that may be offset by the pre-change losses of the subsidiary shall not exceed the section 382 limitation for the subsidiary. For purposes of this limitation, the value of the subsidiary is determined solely by reference to the value of the subsidiary's stock.

(ii) *Pre-change losses*. The pre-change losses of a subsidiary are—

(A) Its allocable part of any consolidated net operating loss which is attributable to it under §1.1502–21(b) or 1.1502–21T(b) in effect prior to June 25, 1999, as contained in 26 CFR part 1 revised April 1, 1999, as applicable (determined on the last day of the consolidated return year that includes the change date) that is not carried back and absorbed in a taxable year prior to the year including the change date;

(B) Its net operating loss carryovers that arose (or are treated under §1.1502–21(c) or 1.1502–21T(c) in effect prior to June 25, 1999, as contained in 26 CFR part 1 revised April 1, 1999, as applicable as having arisen) in a SRLY; and

(C) Its recognized built-in loss with respect to its separately computed net unrealized built-in loss, if any, determined on the change date.

(3) *Coordination with §§1.1502–91A, 1.1502–92A, and 1.1502–94A*. If an increase in percentage ownership interest causes an ownership change with respect to an attribute under this paragraph (b) and under §1.1502–92A on the same day, the ownership change is considered to occur only under §1.1502–92A and not under this paragraph (b). See §1.1502–94A for anti-duplication rules relating to value.

(4) *Example*. The following example illustrates paragraph (b)(1)(ii) of this section.

Example. Plan to avoid an ownership change of a subsidiary. (a) L owns all the stock of L1, L1 owns all the stock of L2, L2 owns all the stock of L3, and L3 owns all the stock of L4. The L group has a consolidated net operating loss arising in Year 1 that is carried over to Year 2. L has assets other than its L1 stock with a value of $900. L1, L2, and L3 own no assets other than their L2, L3, and L4 stock. L4 has assets with a value of $100. During Year 2, A, B, C, and D, acting pursuant to a plan to avoid an ownership change of L4, acquire the following ownership interests in the members of the L loss group: (A) on September 11, Year 2, A acquires 20 percent of the L1 stock from L and B acquires 20 percent of the L2 stock from L1; and (B) on September 20, Year 2, C acquires 20 percent of the stock of L3 from L2 and D acquires 20 percent of the stock of L4 from L3. The following is a graphic illustration of these facts:

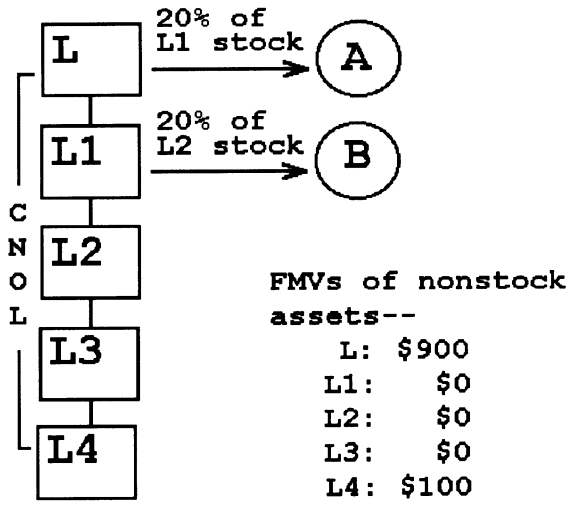

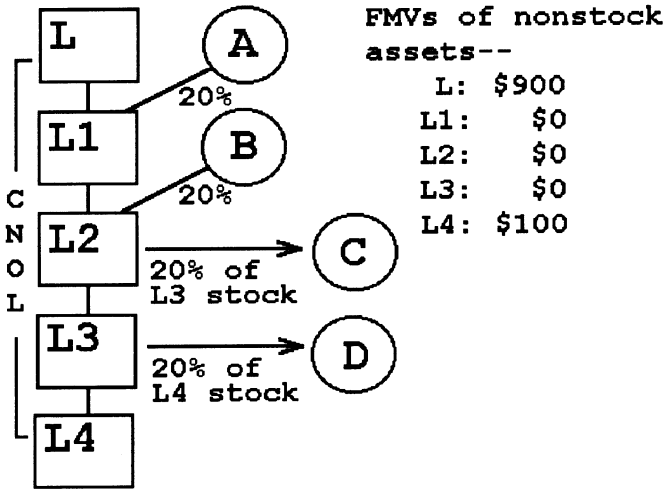

(b) The acquisitions by A, B, C, and D pursuant to the plan have increased their respective percentage ownership interests in L4 by approximately 10, 13, 16, and 20 percentage points, for a total of approximately 59 percentage points during the testing period. This more than 50 percentage point increase in the percentage ownership interest in L4 causes an ownership change of L4 under paragraph (b)(2) of this section.

(c) *Continuing effect of an ownership change.* A loss corporation (or loss subgroup) that is subject to a limitation under section 382 with respect to its

pre-change losses continues to be subject to the limitation regardless of whether it becomes a member or ceases to be a member of a consolidated group. See § 1.382–5(d) (relating to successive ownership changes and absorption of a section 382 limitation).

[T.D. 8678, 61 FR 33362, June 27, 1996; T.D. 8823, 64 FR 36101, July 2, 1999. Redesignated and amended at T.D. 8824, 64 FR 36126, 36128, July 2, 1999]

§ 1.1502–97A Special rules under section 382 for members under the jurisdiction of a court in a title 11 or similar case. [Reserved]

[T.D. 8678, 61 FR 33364, June 27, 1996. Redesignated by T.D. 8824, 64 FR 36128, July 2, 1999]

§ 1.1502–98A Coordination with section 383 generally applicable for testing dates (or members joining or leaving a group) before June 25, 1999.

The rules contained in §§ 1.1502–91A through 1.1502–96A also apply for purposes of section 383, with appropriate adjustments to reflect that section 383 applies to credits and net capital losses. Similarly, in the case of net capital losses, general business credits, and excess foreign taxes that are pre-change attributes, § 1.383–1 applies the principles of §§ 1.1502–91A through 1.1502–96A. For example, if a loss group has an ownership change under § 1.1502–92A and has a carryover of unused general business credits from a pre-change consolidated return year to a post-change consolidated return year, the amount of the group's regular tax liability for the post-change year that can be offset by the carryover cannot exceed the consolidated section 383 credit limitation for that post-change year, determined by applying the principles of §§ 1.383–1(c)(6) and 1.1502–93A (relating to the computation of the consolidated section 382 limitation).

[T.D. 8678, 61 FR 33364, June 27, 1996. Redesignated and amended by T.D. 8824, 64 FR 36126, 36128, July 2, 1999]

§ 1.1502–99A Effective dates.

(a) *Effective date*—(1) *In general.* Except as provided in § 1.1502–99(b), §§ 1.1502–91A through 1.1502–96A and 1.1502–98A apply to any testing date on or after January 1, 1997, and before June 25, 1999. Sections 1.1502–94A through 1.1502–96A also apply on any date on or after January 1, 1997, and before June 25, 1999, on which a corporation becomes a member of a group or on which a corporation ceases to be a member of a loss group (or a loss subgroup).

(2) *Anti-duplication rules for recognized built-in gain.* Section 1.1502–93(c)(2) (relating to recognized built-in gain of a loss group or loss subgroup) applies to taxable years for which the due date for income tax returns (without extensions) is after June 25, 1999,

(b) *Testing period may include a period beginning before January 1, 1997.* A testing period for purposes of §§ 1.1502–91A through 1.1502–96A and 1.1502–98A may include a period beginning before January 1, 1997. Thus, for example, in applying § 1.1502–92A(b)(1)(i) (relating to the determination of an ownership change of a loss group), the determination of the lowest percentage ownership interest of any 5-percent shareholder of the common parent during a testing period ending on a testing date occurring on or after January 1, 1997, takes into account the period beginning before January 1, 1997, except to the extent that the period is more than 3 years before the testing date or is otherwise before the beginning of the testing period. See § 1.1502–92A(b)(1).

(c) *Transition rules*—(1) *Methods permitted*—(i) *In general.* For the period ending before January 1, 1997, a consolidated group is permitted to use any method described in paragraph (c)(2) of this section which is consistently applied to determine if an ownership change occurred with respect to a consolidated net operating loss, a net operating loss carryover (including net operating loss carryovers arising in SRLYs), or a net unrealized built-in loss. If an ownership change occurred during that period, the group is also permitted to use any method described in paragraph (c)(2) of this section which is consistently applied to compute the amount of the section 382 limitation that applies to limit the use of taxable income in any post-change year ending before, on, or after January 1, 1997. The preceding sentence does not preclude the imposition of an additional, lesser limitation due to a subsequent ownership change nor, except as

provided in paragraph (c)(1)(iii) of this section, does it permit the beginning of a new testing period for the loss group.

(ii) *Adjustments to offset excess limitation.* If an ownership change occurred during the period ending before January 1, 1997, and a method described in paragraph (c)(2) of this section was not used for a post-change year, the members (or group) must reduce the section 382 limitation for post-change years for which an income tax return is filed after January 1, 1997, to offset, as quickly as possible, the effects of any section 382 limitation that members took into account in excess of the amount that would have been allowable under §§1.1502–91A through 1.1502–96A and 1.1502–98A.

(iii) *Coordination with effective date.* Notwithstanding that a group may have used a method described in paragraph (c)(2)(ii) or (iii) of this section for the period before January 1, 1997, §§1.1502–91A through 1.1502–96A and 1.1502–98A apply to any testing date occurring on or after January 1, 1997, for purposes of determining whether there is an ownership change with respect to any losses and, if so, the collateral consequences. Any ownership change of a member other than the common parent pursuant to a method described in paragraph (c)(2)(ii) or (iii) of this section does not cause a new testing period of the loss group to begin for purposes of applying §1.1502–92A on or after January 1, 1997.

(2) *Permitted methods.* The methods described in this paragraph (c)(2) are:

(i) A method that does not materially differ from the rules in §§1.1502–91A through 1.1502–96A and 1.1502–98A (other than those in §1.1502–95A(c) and (b)(2)(ii) (relating to the apportionment of a section 382 limitation) as they would apply to a corporation that ceases to be a member of the group before January 1, 1997). As the context requires, the method must treat references to rules in current regulations as references to rules in regulations generally effective for taxable years before January 1, 1997. Thus, for example, the taxpayer must treat a reference to §1.382–4(d) (relating to options) as a reference to §1.382–2T(h)(4) for any testing date to which §1.382–2T(h)(4) applies. Similarly, a reference to §1.1502–21(c) or 1.1502–21T(c) in effect prior to June 25, 1999, as contained in 26 CFR part 1 revised April 1, 1999, as applicable may be a reference to §1.1502–21A(c), as appropriate. Furthermore, the method must treat all corporations that were affiliated on January 1, 1987, and continuously thereafter as having met the 5 consecutive year requirement of §1.1502–91A(d)(2)(i) on any day before January 1, 1992, on which the determination of net unrealized built-in gain or loss of a loss subgroup is made;

(ii) A reasonable application of the rules in section 382 and the regulations thereunder applied to each member on a separate entity basis, treating each member's allocable part of a consolidated net operating loss which is attributable to it under §1.1502–21(b) or 1.1502–21T(b) in effect prior to June 25, 1999, as contained in 26 CFR part 1 revised April 1, 1999, as applicable as a net operating loss of that member and applying rules similar to §1.382–8 to avoid duplication of value in computing the section 382 limitation for the member (see §1.382–8(h) (relating to the effective date and transition rules regarding controlled groups)); or

(iii) A method approved by the Commissioner upon application by the common parent.

(d) *Amended returns.* A group may file an amended return in connection with an ownership change occurring before January 1, 1997, to modify the amount of a section 382 limitation with respect to a consolidated net operating loss, a net operating loss carryover (including net operating loss carryovers arising in SRLYs), or a recognized built-in loss (or gain) only if it files amended returns:

(1) For the earliest taxable year ending after December 31, 1986, in which it had an ownership change, if any, under §1.1502–92A;

(2) For all subsequent taxable years for which returns have already been filed as of the date of the amended return;

(3) The modification with respect to all members for all taxable years ending in 1987 and thereafter complies with §§1.1502–91A through 1.1502–96A and 1.1502–98A; and

(4) The amended return(s) permitted by the applicable statute of limitations is/are filed before March 26, 1997.

(e) *Section 383*. This section also applies for the purposes of section 383, with appropriate adjustments to reflect that section 383 applies to credits and net capital losses.

[T.D. 8678, 61 FR 33364, June 27, 1996, as amended by T.D. 8823, July 2, 1999. Redesignated and amended by T.D. 8824, 64 FR 36126–36128, July 2, 1999]

DUAL CONSOLIDATED LOSSES INCURRED IN TAXABLE YEARS BEGINNING BEFORE OCTOBER 1, 1992

FINDING AIDS

A list of CFR titles, subtitles, chapters, subchapters and parts and an alphabetical list of agencies publishing in the CFR are included in the CFR Index and Finding Aids volume of the Code of Federal Regulations which is published separately and revised annually.

Table of CFR Titles and Chapters
Alphabetical List of Agencies Appearing in the CFR
Table of OMB Control Numbers
List of CFR Sections Affected

Table of CFR Titles and Chapters

(Revised as of April 1, 2015)

Title 1—General Provisions

I Administrative Committee of the Federal Register (Parts 1—49)
II Office of the Federal Register (Parts 50—299)
III Administrative Conference of the United States (Parts 300—399)
IV Miscellaneous Agencies (Parts 400—500)

Title 2—Grants and Agreements

SUBTITLE A—OFFICE OF MANAGEMENT AND BUDGET GUIDANCE FOR GRANTS AND AGREEMENTS
I Office of Management and Budget Governmentwide Guidance for Grants and Agreements (Parts 2—199)
II Office of Management and Budget Guidance (Parts 200—299)
SUBTITLE B—FEDERAL AGENCY REGULATIONS FOR GRANTS AND AGREEMENTS
III Department of Health and Human Services (Parts 300—399)
IV Department of Agriculture (Parts 400—499)
VI Department of State (Parts 600—699)
VII Agency for International Development (Parts 700—799)
VIII Department of Veterans Affairs (Parts 800—899)
IX Department of Energy (Parts 900—999)
X Department of the Treasury (Parts 1000—1099)
XI Department of Defense (Parts 1100—1199)
XII Department of Transportation (Parts 1200—1299)
XIII Department of Commerce (Parts 1300—1399)
XIV Department of the Interior (Parts 1400—1499)
XV Environmental Protection Agency (Parts 1500—1599)
XVIII National Aeronautics and Space Administration (Parts 1800—1899)
XX United States Nuclear Regulatory Commission (Parts 2000—2099)
XXII Corporation for National and Community Service (Parts 2200—2299)
XXIII Social Security Administration (Parts 2300—2399)
XXIV Housing and Urban Development (Parts 2400—2499)
XXV National Science Foundation (Parts 2500—2599)
XXVI National Archives and Records Administration (Parts 2600—2699)
XXVII Small Business Administration (Parts 2700—2799)

Title 2—Grants and Agreements—Continued

Chap.	
XXVIII	Department of Justice (Parts 2800—2899)
XXIX	Department of Labor (Parts 2900—2999)
XXX	Department of Homeland Security (Parts 3000—3099)
XXXI	Institute of Museum and Library Services (Parts 3100—3199)
XXXII	National Endowment for the Arts (Parts 3200—3299)
XXXIII	National Endowment for the Humanities (Parts 3300—3399)
XXXIV	Department of Education (Parts 3400—3499)
XXXV	Export-Import Bank of the United States (Parts 3500—3599)
XXXVI	Office of National Drug Control Policy, Executive Office of the President (Parts 3600—3699)
XXXVII	Peace Corps (Parts 3700—3799)
LVIII	Election Assistance Commission (Parts 5800—5899)
LIX	Gulf COast Ecosystem Restoration Council (Parts 5900—5999)

Title 3—The President

I	Executive Office of the President (Parts 100—199)

Title 4—Accounts

I	Government Accountability Office (Parts 1—199)
II	Recovery Accountability and Transparency Board (Parts 200—299)

Title 5—Administrative Personnel

I	Office of Personnel Management (Parts 1—1199)
II	Merit Systems Protection Board (Parts 1200—1299)
III	Office of Management and Budget (Parts 1300—1399)
V	The International Organizations Employees Loyalty Board (Parts 1500—1599)
VI	Federal Retirement Thrift Investment Board (Parts 1600—1699)
VIII	Office of Special Counsel (Parts 1800—1899)
IX	Appalachian Regional Commission (Parts 1900—1999)
XI	Armed Forces Retirement Home (Parts 2100—2199)
XIV	Federal Labor Relations Authority, General Counsel of the Federal Labor Relations Authority and Federal Service Impasses Panel (Parts 2400—2499)
XVI	Office of Government Ethics (Parts 2600—2699)
XXI	Department of the Treasury (Parts 3100—3199)
XXII	Federal Deposit Insurance Corporation (Parts 3200—3299)
XXIII	Department of Energy (Parts 3300—3399)
XXIV	Federal Energy Regulatory Commission (Parts 3400—3499)
XXV	Department of the Interior (Parts 3500—3599)
XXVI	Department of Defense (Parts 3600—3699)
XXVIII	Department of Justice (Parts 3800—3899)

Title 5—Administrative Personnel—Continued

Chap.	
XXIX	Federal Communications Commission (Parts 3900—3999)
XXX	Farm Credit System Insurance Corporation (Parts 4000—4099)
XXXI	Farm Credit Administration (Parts 4100—4199)
XXXIII	Overseas Private Investment Corporation (Parts 4300—4399)
XXXIV	Securities and Exchange Commission (Parts 4400—4499)
XXXV	Office of Personnel Management (Parts 4500—4599)
XXXVII	Federal Election Commission (Parts 4700—4799)
XL	Interstate Commerce Commission (Parts 5000—5099)
XLI	Commodity Futures Trading Commission (Parts 5100—5199)
XLII	Department of Labor (Parts 5200—5299)
XLIII	National Science Foundation (Parts 5300—5399)
XLV	Department of Health and Human Services (Parts 5500—5599)
XLVI	Postal Rate Commission (Parts 5600—5699)
XLVII	Federal Trade Commission (Parts 5700—5799)
XLVIII	Nuclear Regulatory Commission (Parts 5800—5899)
XLIX	Federal Labor Relations Authority (Parts 5900—5999)
L	Department of Transportation (Parts 6000—6099)
LII	Export-Import Bank of the United States (Parts 6200—6299)
LIII	Department of Education (Parts 6300—6399)
LIV	Environmental Protection Agency (Parts 6400—6499)
LV	National Endowment for the Arts (Parts 6500—6599)
LVI	National Endowment for the Humanities (Parts 6600—6699)
LVII	General Services Administration (Parts 6700—6799)
LVIII	Board of Governors of the Federal Reserve System (Parts 6800—6899)
LIX	National Aeronautics and Space Administration (Parts 6900—6999)
LX	United States Postal Service (Parts 7000—7099)
LXI	National Labor Relations Board (Parts 7100—7199)
LXII	Equal Employment Opportunity Commission (Parts 7200—7299)
LXIII	Inter-American Foundation (Parts 7300—7399)
LXIV	Merit Systems Protection Board (Parts 7400—7499)
LXV	Department of Housing and Urban Development (Parts 7500—7599)
LXVI	National Archives and Records Administration (Parts 7600—7699)
LXVII	Institute of Museum and Library Services (Parts 7700—7799)
LXVIII	Commission on Civil Rights (Parts 7800—7899)
LXIX	Tennessee Valley Authority (Parts 7900—7999)
LXX	Court Services and Offender Supervision Agency for the District of Columbia (Parts 8000—8099)
LXXI	Consumer Product Safety Commission (Parts 8100—8199)
LXXIII	Department of Agriculture (Parts 8300—8399)
LXXIV	Federal Mine Safety and Health Review Commission (Parts 8400—8499)
LXXVI	Federal Retirement Thrift Investment Board (Parts 8600—8699)

Title 5—Administrative Personnel—Continued

Chap.

LXXVII Office of Management and Budget (Parts 8700—8799)

LXXX Federal Housing Finance Agency (Parts 9000—9099)

LXXXIII Special Inspector General for Afghanistan Reconstruction (Parts 9300—9399)

LXXXIV Bureau of Consumer Financial Protection (Parts 9400—9499)

LXXXVI National Credit Union Administration (Parts 9600—9699)

XCVII Department of Homeland Security Human Resources Management System (Department of Homeland Security—Office of Personnel Management) (Parts 9700—9799)

XCVII Council of the Inspectors General on Integrity and Efficiency (Parts 9800—9899)

XCIV Military Compensation and Retirement Modernization Commission (Parts 9900—9999)

Title 6—Domestic Security

I Department of Homeland Security, Office of the Secretary (Parts 1—199)

X Privacy and Civil Liberties Oversight Board (Parts 1000—1099)

Title 7—Agriculture

SUBTITLE A—OFFICE OF THE SECRETARY OF AGRICULTURE (PARTS 0—26)

SUBTITLE B—REGULATIONS OF THE DEPARTMENT OF AGRICULTURE

I Agricultural Marketing Service (Standards, Inspections, Marketing Practices), Department of Agriculture (Parts 27—209)

II Food and Nutrition Service, Department of Agriculture (Parts 210—299)

III Animal and Plant Health Inspection Service, Department of Agriculture (Parts 300—399)

IV Federal Crop Insurance Corporation, Department of Agriculture (Parts 400—499)

V Agricultural Research Service, Department of Agriculture (Parts 500—599)

VI Natural Resources Conservation Service, Department of Agriculture (Parts 600—699)

VII Farm Service Agency, Department of Agriculture (Parts 700—799)

VIII Grain Inspection, Packers and Stockyards Administration (Federal Grain Inspection Service), Department of Agriculture (Parts 800—899)

IX Agricultural Marketing Service (Marketing Agreements and Orders; Fruits, Vegetables, Nuts), Department of Agriculture (Parts 900—999)

X Agricultural Marketing Service (Marketing Agreements and Orders; Milk), Department of Agriculture (Parts 1000—1199)

XI Agricultural Marketing Service (Marketing Agreements and Orders; Miscellaneous Commodities), Department of Agriculture (Parts 1200—1299)

Title 7—Agriculture—Continued

Chap.	
XIV	Commodity Credit Corporation, Department of Agriculture (Parts 1400—1499)
XV	Foreign Agricultural Service, Department of Agriculture (Parts 1500—1599)
XVI	Rural Telephone Bank, Department of Agriculture (Parts 1600—1699)
XVII	Rural Utilities Service, Department of Agriculture (Parts 1700—1799)
XVIII	Rural Housing Service, Rural Business-Cooperative Service, Rural Utilities Service, and Farm Service Agency, Department of Agriculture (Parts 1800—2099)
XX	Local Television Loan Guarantee Board (Parts 2200—2299)
XXV	Office of Advocacy and Outreach, Department of Agriculture (Parts 2500—2599)
XXVI	Office of Inspector General, Department of Agriculture (Parts 2600—2699)
XXVII	Office of Information Resources Management, Department of Agriculture (Parts 2700—2799)
XXVIII	Office of Operations, Department of Agriculture (Parts 2800—2899)
XXIX	Office of Energy Policy and New Uses, Department of Agriculture (Parts 2900—2999)
XXX	Office of the Chief Financial Officer, Department of Agriculture (Parts 3000—3099)
XXXI	Office of Environmental Quality, Department of Agriculture (Parts 3100—3199)
XXXII	Office of Procurement and Property Management, Department of Agriculture (Parts 3200—3299)
XXXIII	Office of Transportation, Department of Agriculture (Parts 3300—3399)
XXXIV	National Institute of Food and Agriculture (Parts 3400—3499)
XXXV	Rural Housing Service, Department of Agriculture (Parts 3500—3599)
XXXVI	National Agricultural Statistics Service, Department of Agriculture (Parts 3600—3699)
XXXVII	Economic Research Service, Department of Agriculture (Parts 3700—3799)
XXXVIII	World Agricultural Outlook Board, Department of Agriculture (Parts 3800—3899)
XLI	[Reserved]
XLII	Rural Business-Cooperative Service and Rural Utilities Service, Department of Agriculture (Parts 4200—4299)

Title 8—Aliens and Nationality

I	Department of Homeland Security (Immigration and Naturalization) (Parts 1—499)
V	Executive Office for Immigration Review, Department of Justice (Parts 1000—1399)

Title 9—Animals and Animal Products

Chap.

I Animal and Plant Health Inspection Service, Department of Agriculture (Parts 1—199)

II Grain Inspection, Packers and Stockyards Administration (Packers and Stockyards Programs), Department of Agriculture (Parts 200—299)

III Food Safety and Inspection Service, Department of Agriculture (Parts 300—599)

Title 10—Energy

I Nuclear Regulatory Commission (Parts 0—199)

II Department of Energy (Parts 200—699)

III Department of Energy (Parts 700—999)

X Department of Energy (General Provisions) (Parts 1000—1099)

XIII Nuclear Waste Technical Review Board (Parts 1300—1399)

XVII Defense Nuclear Facilities Safety Board (Parts 1700—1799)

XVIII Northeast Interstate Low-Level Radioactive Waste Commission (Parts 1800—1899)

Title 11—Federal Elections

I Federal Election Commission (Parts 1—9099)

II Election Assistance Commission (Parts 9400—9499)

Title 12—Banks and Banking

I Comptroller of the Currency, Department of the Treasury (Parts 1—199)

II Federal Reserve System (Parts 200—299)

III Federal Deposit Insurance Corporation (Parts 300—399)

IV Export-Import Bank of the United States (Parts 400—499)

V Office of Thrift Supervision, Department of the Treasury (Parts 500—599)

VI Farm Credit Administration (Parts 600—699)

VII National Credit Union Administration (Parts 700—799)

VIII Federal Financing Bank (Parts 800—899)

IX Federal Housing Finance Board (Parts 900—999)

X Bureau of Consumer Financial Protection (Parts 1000—1099)

XI Federal Financial Institutions Examination Council (Parts 1100—1199)

XII Federal Housing Finance Agency (Parts 1200—1299)

XIII Financial Stability Oversight Council (Parts 1300—1399)

XIV Farm Credit System Insurance Corporation (Parts 1400—1499)

XV Department of the Treasury (Parts 1500—1599)

XVI Office of Financial Research (Parts 1600—1699)

XVII Office of Federal Housing Enterprise Oversight, Department of Housing and Urban Development (Parts 1700—1799)

Title 12—Banks and Banking—Continued

Chap.

XVIII Community Development Financial Institutions Fund, Department of the Treasury (Parts 1800—1899)

Title 13—Business Credit and Assistance

I Small Business Administration (Parts 1—199)

III Economic Development Administration, Department of Commerce (Parts 300—399)

IV Emergency Steel Guarantee Loan Board (Parts 400—499)

V Emergency Oil and Gas Guaranteed Loan Board (Parts 500—599)

Title 14—Aeronautics and Space

I Federal Aviation Administration, Department of Transportation (Parts 1—199)

II Office of the Secretary, Department of Transportation (Aviation Proceedings) (Parts 200—399)

III Commercial Space Transportation, Federal Aviation Administration, Department of Transportation (Parts 400—1199)

V National Aeronautics and Space Administration (Parts 1200—1299)

VI Air Transportation System Stabilization (Parts 1300—1399)

Title 15—Commerce and Foreign Trade

SUBTITLE A—OFFICE OF THE SECRETARY OF COMMERCE (PARTS 0—29)

SUBTITLE B—REGULATIONS RELATING TO COMMERCE AND FOREIGN TRADE

I Bureau of the Census, Department of Commerce (Parts 30—199)

II National Institute of Standards and Technology, Department of Commerce (Parts 200—299)

III International Trade Administration, Department of Commerce (Parts 300—399)

IV Foreign-Trade Zones Board, Department of Commerce (Parts 400—499)

VII Bureau of Industry and Security, Department of Commerce (Parts 700—799)

VIII Bureau of Economic Analysis, Department of Commerce (Parts 800—899)

IX National Oceanic and Atmospheric Administration, Department of Commerce (Parts 900—999)

XI Technology Administration, Department of Commerce (Parts 1100—1199)

XIII East-West Foreign Trade Board (Parts 1300—1399)

XIV Minority Business Development Agency (Parts 1400—1499)

SUBTITLE C—REGULATIONS RELATING TO FOREIGN TRADE AGREEMENTS

Title 15—Commerce and Foreign Trade—Continued

Chap.

XX Office of the United States Trade Representative (Parts 2000—2099)

SUBTITLE D—REGULATIONS RELATING TO TELECOMMUNICATIONS AND INFORMATION

XXIII National Telecommunications and Information Administration, Department of Commerce (Parts 2300—2399)

Title 16—Commercial Practices

I Federal Trade Commission (Parts 0—999)

II Consumer Product Safety Commission (Parts 1000—1799)

Title 17—Commodity and Securities Exchanges

I Commodity Futures Trading Commission (Parts 1—199)

II Securities and Exchange Commission (Parts 200—399)

IV Department of the Treasury (Parts 400—499)

Title 18—Conservation of Power and Water Resources

I Federal Energy Regulatory Commission, Department of Energy (Parts 1—399)

III Delaware River Basin Commission (Parts 400—499)

VI Water Resources Council (Parts 700—799)

VIII Susquehanna River Basin Commission (Parts 800—899)

XIII Tennessee Valley Authority (Parts 1300—1399)

Title 19—Customs Duties

I U.S. Customs and Border Protection, Department of Homeland Security; Department of the Treasury (Parts 0—199)

II United States International Trade Commission (Parts 200—299)

III International Trade Administration, Department of Commerce (Parts 300—399)

IV U.S. Immigration and Customs Enforcement, Department of Homeland Security (Parts 400—599)

Title 20—Employees' Benefits

I Office of Workers' Compensation Programs, Department of Labor (Parts 1—199)

II Railroad Retirement Board (Parts 200—399)

III Social Security Administration (Parts 400—499)

IV Employees' Compensation Appeals Board, Department of Labor (Parts 500—599)

V Employment and Training Administration, Department of Labor (Parts 600—699)

Title 20—Employees' Benefits—Continued

Chap.

VI Office of Workers' Compensation Programs, Department of Labor (Parts 700—799)

VII Benefits Review Board, Department of Labor (Parts 800—899)

VIII Joint Board for the Enrollment of Actuaries (Parts 900—999)

IX Office of the Assistant Secretary for Veterans' Employment and Training Service, Department of Labor (Parts 1000—1099)

Title 21—Food and Drugs

I Food and Drug Administration, Department of Health and Human Services (Parts 1—1299)

II Drug Enforcement Administration, Department of Justice (Parts 1300—1399)

III Office of National Drug Control Policy (Parts 1400—1499)

Title 22—Foreign Relations

I Department of State (Parts 1—199)

II Agency for International Development (Parts 200—299)

III Peace Corps (Parts 300—399)

IV International Joint Commission, United States and Canada (Parts 400—499)

V Broadcasting Board of Governors (Parts 500—599)

VII Overseas Private Investment Corporation (Parts 700—799)

IX Foreign Service Grievance Board (Parts 900—999)

X Inter-American Foundation (Parts 1000—1099)

XI International Boundary and Water Commission, United States and Mexico, United States Section (Parts 1100—1199)

XII United States International Development Cooperation Agency (Parts 1200—1299)

XIII Millennium Challenge Corporation (Parts 1300—1399)

XIV Foreign Service Labor Relations Board; Federal Labor Relations Authority; General Counsel of the Federal Labor Relations Authority; and the Foreign Service Impasse Disputes Panel (Parts 1400—1499)

XV African Development Foundation (Parts 1500—1599)

XVI Japan-United States Friendship Commission (Parts 1600—1699)

XVII United States Institute of Peace (Parts 1700—1799)

Title 23—Highways

I Federal Highway Administration, Department of Transportation (Parts 1—999)

II National Highway Traffic Safety Administration and Federal Highway Administration, Department of Transportation (Parts 1200—1299)

III National Highway Traffic Safety Administration, Department of Transportation (Parts 1300—1399)

Title 24—Housing and Urban Development

Chap.

SUBTITLE A—OFFICE OF THE SECRETARY, DEPARTMENT OF HOUSING AND URBAN DEVELOPMENT (PARTS 0—99)

SUBTITLE B—REGULATIONS RELATING TO HOUSING AND URBAN DEVELOPMENT

I Office of Assistant Secretary for Equal Opportunity, Department of Housing and Urban Development (Parts 100—199)

II Office of Assistant Secretary for Housing-Federal Housing Commissioner, Department of Housing and Urban Development (Parts 200—299)

III Government National Mortgage Association, Department of Housing and Urban Development (Parts 300—399)

IV Office of Housing and Office of Multifamily Housing Assistance Restructuring, Department of Housing and Urban Development (Parts 400—499)

V Office of Assistant Secretary for Community Planning and Development, Department of Housing and Urban Development (Parts 500—599)

VI Office of Assistant Secretary for Community Planning and Development, Department of Housing and Urban Development (Parts 600—699) [Reserved]

VII Office of the Secretary, Department of Housing and Urban Development (Housing Assistance Programs and Public and Indian Housing Programs) (Parts 700—799)

VIII Office of the Assistant Secretary for Housing—Federal Housing Commissioner, Department of Housing and Urban Development (Section 8 Housing Assistance Programs, Section 202 Direct Loan Program, Section 202 Supportive Housing for the Elderly Program and Section 811 Supportive Housing for Persons With Disabilities Program) (Parts 800—899)

IX Office of Assistant Secretary for Public and Indian Housing, Department of Housing and Urban Development (Parts 900—1699)

X Office of Assistant Secretary for Housing—Federal Housing Commissioner, Department of Housing and Urban Development (Interstate Land Sales Registration Program) (Parts 1700—1799)

XII Office of Inspector General, Department of Housing and Urban Development (Parts 2000—2099)

XV Emergency Mortgage Insurance and Loan Programs, Department of Housing and Urban Development (Parts 2700—2799) [Reserved]

XX Office of Assistant Secretary for Housing—Federal Housing Commissioner, Department of Housing and Urban Development (Parts 3200—3899)

XXIV Board of Directors of the HOPE for Homeowners Program (Parts 4000—4099) [Reserved]

XXV Neighborhood Reinvestment Corporation (Parts 4100—4199)

Title 25—Indians

I Bureau of Indian Affairs, Department of the Interior (Parts 1—299)

Title 25—Indians—Continued

Chap.

II Indian Arts and Crafts Board, Department of the Interior (Parts 300—399)

III National Indian Gaming Commission, Department of the Interior (Parts 500—599)

IV Office of Navajo and Hopi Indian Relocation (Parts 700—799)

V Bureau of Indian Affairs, Department of the Interior, and Indian Health Service, Department of Health and Human Services (Part 900)

VI Office of the Assistant Secretary-Indian Affairs, Department of the Interior (Parts 1000—1199)

VII Office of the Special Trustee for American Indians, Department of the Interior (Parts 1200—1299)

Title 26—Internal Revenue

I Internal Revenue Service, Department of the Treasury (Parts 1—End)

Title 27—Alcohol, Tobacco Products and Firearms

I Alcohol and Tobacco Tax and Trade Bureau, Department of the Treasury (Parts 1—399)

II Bureau of Alcohol, Tobacco, Firearms, and Explosives, Department of Justice (Parts 400—699)

Title 28—Judicial Administration

I Department of Justice (Parts 0—299)

III Federal Prison Industries, Inc., Department of Justice (Parts 300—399)

V Bureau of Prisons, Department of Justice (Parts 500—599)

VI Offices of Independent Counsel, Department of Justice (Parts 600—699)

VII Office of Independent Counsel (Parts 700—799)

VIII Court Services and Offender Supervision Agency for the District of Columbia (Parts 800—899)

IX National Crime Prevention and Privacy Compact Council (Parts 900—999)

XI Department of Justice and Department of State (Parts 1100—1199)

Title 29—Labor

SUBTITLE A—OFFICE OF THE SECRETARY OF LABOR (PARTS 0—99)

SUBTITLE B—REGULATIONS RELATING TO LABOR

I National Labor Relations Board (Parts 100—199)

II Office of Labor-Management Standards, Department of Labor (Parts 200—299)

III National Railroad Adjustment Board (Parts 300—399)

Title 29—Labor—Continued

Chap.

IV Office of Labor-Management Standards, Department of Labor (Parts 400—499)

V Wage and Hour Division, Department of Labor (Parts 500—899)

IX Construction Industry Collective Bargaining Commission (Parts 900—999)

X National Mediation Board (Parts 1200—1299)

XII Federal Mediation and Conciliation Service (Parts 1400—1499)

XIV Equal Employment Opportunity Commission (Parts 1600—1699)

XVII Occupational Safety and Health Administration, Department of Labor (Parts 1900—1999)

XX Occupational Safety and Health Review Commission (Parts 2200—2499)

XXV Employee Benefits Security Administration, Department of Labor (Parts 2500—2599)

XXVII Federal Mine Safety and Health Review Commission (Parts 2700—2799)

XL Pension Benefit Guaranty Corporation (Parts 4000—4999)

Title 30—Mineral Resources

I Mine Safety and Health Administration, Department of Labor (Parts 1—199)

II Bureau of Safety and Environmental Enforcement, Department of the Interior (Parts 200—299)

IV Geological Survey, Department of the Interior (Parts 400—499)

V Bureau of Ocean Energy Management, Department of the Interior (Parts 500—599)

VII Office of Surface Mining Reclamation and Enforcement, Department of the Interior (Parts 700—999)

XII Office of Natural Resources Revenue, Department of the Interior (Parts 1200—1299)

Title 31—Money and Finance: Treasury

SUBTITLE A—OFFICE OF THE SECRETARY OF THE TREASURY (PARTS 0—50)

SUBTITLE B—REGULATIONS RELATING TO MONEY AND FINANCE

I Monetary Offices, Department of the Treasury (Parts 51—199)

II Fiscal Service, Department of the Treasury (Parts 200—399)

IV Secret Service, Department of the Treasury (Parts 400—499)

V Office of Foreign Assets Control, Department of the Treasury (Parts 500—599)

VI Bureau of Engraving and Printing, Department of the Treasury (Parts 600—699)

VII Federal Law Enforcement Training Center, Department of the Treasury (Parts 700—799)

VIII Office of International Investment, Department of the Treasury (Parts 800—899)

Title 31—Money and Finance: Treasury—Continued

Chap.

IX Federal Claims Collection Standards (Department of the Treasury—Department of Justice) (Parts 900—999)

X Financial Crimes Enforcement Network, Department of the Treasury (Parts 1000—1099)

Title 32—National Defense

SUBTITLE A—DEPARTMENT OF DEFENSE

I Office of the Secretary of Defense (Parts 1—399)

V Department of the Army (Parts 400—699)

VI Department of the Navy (Parts 700—799)

VII Department of the Air Force (Parts 800—1099)

SUBTITLE B—OTHER REGULATIONS RELATING TO NATIONAL DEFENSE

XII Defense Logistics Agency (Parts 1200—1299)

XVI Selective Service System (Parts 1600—1699)

XVII Office of the Director of National Intelligence (Parts 1700—1799)

XVIII National Counterintelligence Center (Parts 1800—1899)

XIX Central Intelligence Agency (Parts 1900—1999)

XX Information Security Oversight Office, National Archives and Records Administration (Parts 2000—2099)

XXI National Security Council (Parts 2100—2199)

XXIV Office of Science and Technology Policy (Parts 2400—2499)

XXVII Office for Micronesian Status Negotiations (Parts 2700—2799)

XXVIII Office of the Vice President of the United States (Parts 2800—2899)

Title 33—Navigation and Navigable Waters

I Coast Guard, Department of Homeland Security (Parts 1—199)

II Corps of Engineers, Department of the Army (Parts 200—399)

IV Saint Lawrence Seaway Development Corporation, Department of Transportation (Parts 400—499)

Title 34—Education

SUBTITLE A—OFFICE OF THE SECRETARY, DEPARTMENT OF EDUCATION (PARTS 1—99)

SUBTITLE B—REGULATIONS OF THE OFFICES OF THE DEPARTMENT OF EDUCATION

I Office for Civil Rights, Department of Education (Parts 100—199)

II Office of Elementary and Secondary Education, Department of Education (Parts 200—299)

III Office of Special Education and Rehabilitative Services, Department of Education (Parts 300—399)

IV Office of Career, Technical and Adult Education, Department of Education (Parts 400—499)

Title 34—Education—Continued

Chap.

V Office of Bilingual Education and Minority Languages Affairs, Department of Education (Parts 500—599) [Reserved]

VI Office of Postsecondary Education, Department of Education (Parts 600—699)

VII Office of Educational Research and Improvement, Department of Education (Parts 700—799) [Reserved]

SUBTITLE C—REGULATIONS RELATING TO EDUCATION

XI [Reserved]

XII National Council on Disability (Parts 1200—1299)

Title 35 [Reserved]

Title 36—Parks, Forests, and Public Property

I National Park Service, Department of the Interior (Parts 1—199)

II Forest Service, Department of Agriculture (Parts 200—299)

III Corps of Engineers, Department of the Army (Parts 300—399)

IV American Battle Monuments Commission (Parts 400—499)

V Smithsonian Institution (Parts 500—599)

VI [Reserved]

VII Library of Congress (Parts 700—799)

VIII Advisory Council on Historic Preservation (Parts 800—899)

IX Pennsylvania Avenue Development Corporation (Parts 900—999)

X Presidio Trust (Parts 1000—1099)

XI Architectural and Transportation Barriers Compliance Board (Parts 1100—1199)

XII National Archives and Records Administration (Parts 1200—1299)

XV Oklahoma City National Memorial Trust (Parts 1500—1599)

XVI Morris K. Udall Scholarship and Excellence in National Environmental Policy Foundation (Parts 1600—1699)

Title 37—Patents, Trademarks, and Copyrights

I United States Patent and Trademark Office, Department of Commerce (Parts 1—199)

II U.S. Copyright Office, Library of Congress (Parts 200—299)

III Copyright Royalty Board, Library of Congress (Parts 300—399)

IV Assistant Secretary for Technology Policy, Department of Commerce (Parts 400—599)

Title 38—Pensions, Bonuses, and Veterans' Relief

I Department of Veterans Affairs (Parts 0—199)

II Armed Forces Retirement Home (Parts 200—299)

Title 39—Postal Service

Chap.

I United States Postal Service (Parts 1—999)

III Postal Regulatory Commission (Parts 3000—3099)

Title 40—Protection of Environment

I Environmental Protection Agency (Parts 1—1099)

IV Environmental Protection Agency and Department of Justice (Parts 1400—1499)

V Council on Environmental Quality (Parts 1500—1599)

VI Chemical Safety and Hazard Investigation Board (Parts 1600—1699)

VII Environmental Protection Agency and Department of Defense; Uniform National Discharge Standards for Vessels of the Armed Forces (Parts 1700—1799)

VIII Gulf Coast Ecosystem Restoration Council (Parts 1800—1899)

Title 41—Public Contracts and Property Management

SUBTITLE A—FEDERAL PROCUREMENT REGULATIONS SYSTEM [NOTE]

SUBTITLE B—OTHER PROVISIONS RELATING TO PUBLIC CONTRACTS

50 Public Contracts, Department of Labor (Parts 50–1—50–999)

51 Committee for Purchase From People Who Are Blind or Severely Disabled (Parts 51–1—51–99)

60 Office of Federal Contract Compliance Programs, Equal Employment Opportunity, Department of Labor (Parts 60–1—60–999)

61 Office of the Assistant Secretary for Veterans' Employment and Training Service, Department of Labor (Parts 61–1—61–999)

62—100 [Reserved]

SUBTITLE C—FEDERAL PROPERTY MANAGEMENT REGULATIONS SYSTEM

101 Federal Property Management Regulations (Parts 101–1—101–99)

102 Federal Management Regulation (Parts 102–1—102–299)

103—104 [Reserved]

105 General Services Administration (Parts 105–1—105–999)

109 Department of Energy Property Management Regulations (Parts 109–1—109–99)

114 Department of the Interior (Parts 114–1—114–99)

115 Environmental Protection Agency (Parts 115–1—115–99)

128 Department of Justice (Parts 128–1—128–99)

129—200 [Reserved]

SUBTITLE D—OTHER PROVISIONS RELATING TO PROPERTY MANAGEMENT [RESERVED]

SUBTITLE E—FEDERAL INFORMATION RESOURCES MANAGEMENT REGULATIONS SYSTEM [RESERVED]

SUBTITLE F—FEDERAL TRAVEL REGULATION SYSTEM

300 General (Parts 300–1—300–99)

301 Temporary Duty (TDY) Travel Allowances (Parts 301–1—301–99)

Chap.

302 Relocation Allowances (Parts 302–1—302–99)

303 Payment of Expenses Connected with the Death of Certain Employees (Part 303–1—303–99)

304 Payment of Travel Expenses from a Non-Federal Source (Parts 304–1—304–99)

Title 42—Public Health

I Public Health Service, Department of Health and Human Services (Parts 1—199)

IV Centers for Medicare & Medicaid Services, Department of Health and Human Services (Parts 400—599)

V Office of Inspector General-Health Care, Department of Health and Human Services (Parts 1000—1999)

Title 43—Public Lands: Interior

SUBTITLE A—OFFICE OF THE SECRETARY OF THE INTERIOR (PARTS 1—199)

SUBTITLE B—REGULATIONS RELATING TO PUBLIC LANDS

I Bureau of Reclamation, Department of the Interior (Parts 400—999)

II Bureau of Land Management, Department of the Interior (Parts 1000—9999)

III Utah Reclamation Mitigation and Conservation Commission (Parts 10000—10099)

Title 44—Emergency Management and Assistance

I Federal Emergency Management Agency, Department of Homeland Security (Parts 0—399)

IV Department of Commerce and Department of Transportation (Parts 400—499)

Title 45—Public Welfare

SUBTITLE A—DEPARTMENT OF HEALTH AND HUMAN SERVICES (PARTS 1—199)

SUBTITLE B—REGULATIONS RELATING TO PUBLIC WELFARE

II Office of Family Assistance (Assistance Programs), Administration for Children and Families, Department of Health and Human Services (Parts 200—299)

III Office of Child Support Enforcement (Child Support Enforcement Program), Administration for Children and Families, Department of Health and Human Services (Parts 300—399)

IV Office of Refugee Resettlement, Administration for Children and Families, Department of Health and Human Services (Parts 400—499)

V Foreign Claims Settlement Commission of the United States, Department of Justice (Parts 500—599)

Title 45—Public Welfare—Continued

Chap.

VI National Science Foundation (Parts 600—699)

VII Commission on Civil Rights (Parts 700—799)

VIII Office of Personnel Management (Parts 800—899)

X Office of Community Services, Administration for Children and Families, Department of Health and Human Services (Parts 1000—1099)

XI National Foundation on the Arts and the Humanities (Parts 1100—1199)

XII Corporation for National and Community Service (Parts 1200—1299)

XIII Office of Human Development Services, Department of Health and Human Services (Parts 1300—1399)

XVI Legal Services Corporation (Parts 1600—1699)

XVII National Commission on Libraries and Information Science (Parts 1700—1799)

XVIII Harry S. Truman Scholarship Foundation (Parts 1800—1899)

XXI Commission on Fine Arts (Parts 2100—2199)

XXIII Arctic Research Commission (Part 2301)

XXIV James Madison Memorial Fellowship Foundation (Parts 2400—2499)

XXV Corporation for National and Community Service (Parts 2500—2599)

Title 46—Shipping

I Coast Guard, Department of Homeland Security (Parts 1—199)

II Maritime Administration, Department of Transportation (Parts 200—399)

III Coast Guard (Great Lakes Pilotage), Department of Homeland Security (Parts 400—499)

IV Federal Maritime Commission (Parts 500—599)

Title 47—Telecommunication

I Federal Communications Commission (Parts 0—199)

II Office of Science and Technology Policy and National Security Council (Parts 200—299)

III National Telecommunications and Information Administration, Department of Commerce (Parts 300—399)

IV National Telecommunications and Information Administration, Department of Commerce, and National Highway Traffic Safety Administration, Department of Transportation (Parts 400—499)

Title 48—Federal Acquisition Regulations System

1 Federal Acquisition Regulation (Parts 1—99)

2 Defense Acquisition Regulations System, Department of Defense (Parts 200—299)

Title 48—Federal Acquisition Regulations System—Continued

Chap.

3 Health and Human Services (Parts 300—399)

4 Department of Agriculture (Parts 400—499)

5 General Services Administration (Parts 500—599)

6 Department of State (Parts 600—699)

7 Agency for International Development (Parts 700—799)

8 Department of Veterans Affairs (Parts 800—899)

9 Department of Energy (Parts 900—999)

10 Department of the Treasury (Parts 1000—1099)

12 Department of Transportation (Parts 1200—1299)

13 Department of Commerce (Parts 1300—1399)

14 Department of the Interior (Parts 1400—1499)

15 Environmental Protection Agency (Parts 1500—1599)

16 Office of Personnel Management, Federal Employees Health Benefits Acquisition Regulation (Parts 1600—1699)

17 Office of Personnel Management (Parts 1700—1799)

18 National Aeronautics and Space Administration (Parts 1800—1899)

19 Broadcasting Board of Governors (Parts 1900—1999)

20 Nuclear Regulatory Commission (Parts 2000—2099)

21 Office of Personnel Management, Federal Employees Group Life Insurance Federal Acquisition Regulation (Parts 2100—2199)

23 Social Security Administration (Parts 2300—2399)

24 Department of Housing and Urban Development (Parts 2400—2499)

25 National Science Foundation (Parts 2500—2599)

28 Department of Justice (Parts 2800—2899)

29 Department of Labor (Parts 2900—2999)

30 Department of Homeland Security, Homeland Security Acquisition Regulation (HSAR) (Parts 3000—3099)

34 Department of Education Acquisition Regulation (Parts 3400—3499)

51 Department of the Army Acquisition Regulations (Parts 5100—5199)

52 Department of the Navy Acquisition Regulations (Parts 5200—5299)

53 Department of the Air Force Federal Acquisition Regulation Supplement (Parts 5300—5399) [Reserved]

54 Defense Logistics Agency, Department of Defense (Parts 5400—5499)

57 African Development Foundation (Parts 5700—5799)

61 Civilian Board of Contract Appeals, General Services Administration (Parts 6100—6199)

63 Department of Transportation Board of Contract Appeals (Parts 6300—6399)

99 Cost Accounting Standards Board, Office of Federal Procurement Policy, Office of Management and Budget (Parts 9900—9999)

Title 49—Transportation

Chap.

SUBTITLE A—OFFICE OF THE SECRETARY OF TRANSPORTATION (PARTS 1—99)

SUBTITLE B—OTHER REGULATIONS RELATING TO TRANSPORTATION

I Pipeline and Hazardous Materials Safety Administration, Department of Transportation (Parts 100—199)

II Federal Railroad Administration, Department of Transportation (Parts 200—299)

III Federal Motor Carrier Safety Administration, Department of Transportation (Parts 300—399)

IV Coast Guard, Department of Homeland Security (Parts 400—499)

V National Highway Traffic Safety Administration, Department of Transportation (Parts 500—599)

VI Federal Transit Administration, Department of Transportation (Parts 600—699)

VII National Railroad Passenger Corporation (AMTRAK) (Parts 700—799)

VIII National Transportation Safety Board (Parts 800—999)

X Surface Transportation Board, Department of Transportation (Parts 1000—1399)

XI Research and Innovative Technology Administration, Department of Transportation (Parts 1400—1499) [Reserved]

XII Transportation Security Administration, Department of Homeland Security (Parts 1500—1699)

Title 50—Wildlife and Fisheries

I United States Fish and Wildlife Service, Department of the Interior (Parts 1—199)

II National Marine Fisheries Service, National Oceanic and Atmospheric Administration, Department of Commerce (Parts 200—299)

III International Fishing and Related Activities (Parts 300—399)

IV Joint Regulations (United States Fish and Wildlife Service, Department of the Interior and National Marine Fisheries Service, National Oceanic and Atmospheric Administration, Department of Commerce); Endangered Species Committee Regulations (Parts 400—499)

V Marine Mammal Commission (Parts 500—599)

VI Fishery Conservation and Management, National Oceanic and Atmospheric Administration, Department of Commerce (Parts 600—699)

Alphabetical List of Agencies Appearing in the CFR

(Revised as of April 1, 2015)

Agency	CFR Title, Subtitle or Chapter
Administrative Committee of the Federal Register	1, I
Administrative Conference of the United States	1, III
Advisory Council on Historic Preservation	36, VIII
Advocacy and Outreach, Office of	7, XXV
Afghanistan Reconstruction, Special Inspector General for	22, LXXXIII
African Development Foundation	22, XV
Federal Acquisition Regulation	48, 57
Agency for International Development	2, VII; 22, II
Federal Acquisition Regulation	48, 7
Agricultural Marketing Service	7, I, IX, X, XI
Agricultural Research Service	7, V
Agriculture Department	2, IV; 5, LXXIII
Advocacy and Outreach, Office of	7, XXV
Agricultural Marketing Service	7, I, IX, X, XI
Agricultural Research Service	7, V
Animal and Plant Health Inspection Service	7, III; 9, I
Chief Financial Officer, Office of	7, XXX
Commodity Credit Corporation	7, XIV
Economic Research Service	7, XXXVII
Energy Policy and New Uses, Office of	2, IX; 7, XXIX
Environmental Quality, Office of	7, XXXI
Farm Service Agency	7, VII, XVIII
Federal Acquisition Regulation	48, 4
Federal Crop Insurance Corporation	7, IV
Food and Nutrition Service	7, II
Food Safety and Inspection Service	9, III
Foreign Agricultural Service	7, XV
Forest Service	36, II
Grain Inspection, Packers and Stockyards Administration	7, VIII; 9, II
Information Resources Management, Office of	7, XXVII
Inspector General, Office of	7, XXVI
National Agricultural Library	7, XLI
National Agricultural Statistics Service	7, XXXVI
National Institute of Food and Agriculture	7, XXXIV
Natural Resources Conservation Service	7, VI
Operations, Office of	7, XXVIII
Procurement and Property Management, Office of	7, XXXII
Rural Business-Cooperative Service	7, XVIII, XLII, L
Rural Development Administration	7, XLII
Rural Housing Service	7, XVIII, XXXV, L
Rural Telephone Bank	7, XVI
Rural Utilities Service	7, XVII, XVIII, XLII, L
Secretary of Agriculture, Office of	7, Subtitle A
Transportation, Office of	7, XXXIII
World Agricultural Outlook Board	7, XXXVIII
Air Force Department	32, VII
Federal Acquisition Regulation Supplement	48, 53
Air Transportation Stabilization Board	14, VI
Alcohol and Tobacco Tax and Trade Bureau	27, I
Alcohol, Tobacco, Firearms, and Explosives, Bureau of	27, II
AMTRAK	49, VII
American Battle Monuments Commission	36, IV
American Indians, Office of the Special Trustee	25, VII

Agency	CFR Title, Subtitle or Chapter
Animal and Plant Health Inspection Service	7, III; 9, I
Appalachian Regional Commission	5, IX
Architectural and Transportation Barriers Compliance Board	36, XI
Arctic Research Commission	45, XXIII
Armed Forces Retirement Home	5, XI
Army Department	32, V
Engineers, Corps of	33, II; 36, III
Federal Acquisition Regulation	48, 51
Bilingual Education and Minority Languages Affairs, Office of	34, V
Blind or Severely Disabled, Committee for Purchase from People Who Are	41, 51
Broadcasting Board of Governors	22, V
Federal Acquisition Regulation	48, 19
Census Bureau	15, I
Centers for Medicare & Medicaid Services	42, IV
Central Intelligence Agency	32, XIX
Chemical Safety and Hazardous Investigation Board	40, VI
Chief Financial Officer, Office of	7, XXX
Child Support Enforcement, Office of	45, III
Children and Families, Administration for	45, II, III, IV, X
Civil Rights, Commission on	5, LXVIII; 45, VII
Civil Rights, Office for	34, I
Council of the Inspectors General on Integrity and Efficiency	5, XCVIII
Court Services and Offender Supervision Agency for the District of Columbia	5, LXX
Coast Guard	33, I; 46, I; 49, IV
Coast Guard (Great Lakes Pilotage)	46, III
Commerce Department	2, XIII; 44, IV; 50, VI
Census Bureau	15, I
Economic Analysis, Bureau of	15, VIII
Economic Development Administration	13, III
Emergency Management and Assistance	44, IV
Federal Acquisition Regulation	48, 13
Foreign-Trade Zones Board	15, IV
Industry and Security, Bureau of	15, VII
International Trade Administration	15, III; 19, III
National Institute of Standards and Technology	15, II
National Marine Fisheries Service	50, II, IV
National Oceanic and Atmospheric Administration	15, IX; 50, II, III, IV, VI
National Telecommunications and Information Administration	15, XXIII; 47, III, IV
National Weather Service	15, IX
Patent and Trademark Office, United States	37, I
Productivity, Technology and Innovation, Assistant Secretary for	37, IV
Secretary of Commerce, Office of	15, Subtitle A
Technology Administration	15, XI
Technology Policy, Assistant Secretary for	37, IV
Commercial Space Transportation	14, III
Commodity Credit Corporation	7, XIV
Commodity Futures Trading Commission	5, XLI; 17, I
Community Planning and Development, Office of Assistant Secretary for	24, V, VI
Community Services, Office of	45, X
Comptroller of the Currency	12, I
Construction Industry Collective Bargaining Commission	29, IX
Consumer Financial Protection Bureau	5, LXXXIV; 12, X
Consumer Product Safety Commission	5, LXXI; 16, II
Copyright Royalty Board	37, III
Corporation for National and Community Service	2, XXII; 45, XII, XXV
Cost Accounting Standards Board	48, 99
Council on Environmental Quality	40, V
Court Services and Offender Supervision Agency for the District of Columbia	5, LXX; 28, VIII
Customs and Border Protection	19, I
Defense Contract Audit Agency	32, I
Defense Department	2, XI; 5, XXVI; 32, Subtitle A; 40, VII

Agency	CFR Title, Subtitle or Chapter
Advanced Research Projects Agency	32, I
Air Force Department	32, VII
Army Department	32, V; 33, II; 36, III, 48, 51
Defense Acquisition Regulations System	48, 2
Defense Intelligence Agency	32, I
Defense Logistics Agency	32, I, XII; 48, 54
Engineers, Corps of	33, II; 36, III
National Imagery and Mapping Agency	32, I
Navy Department	32, VI; 48, 52
Secretary of Defense, Office of	2, XI; 32, I
Defense Contract Audit Agency	32, I
Defense Intelligence Agency	32, I
Defense Logistics Agency	32, XII; 48, 54
Defense Nuclear Facilities Safety Board	10, XVII
Delaware River Basin Commission	18, III
District of Columbia, Court Services and Offender Supervision Agency for the	5, LXX; 28, VIII
Drug Enforcement Administration	21, II
East-West Foreign Trade Board	15, XIII
Economic Analysis, Bureau of	15, VIII
Economic Development Administration	13, III
Economic Research Service	7, XXXVII
Education, Department of	2, XXXIV; 5, LIII
Bilingual Education and Minority Languages Affairs, Office of	34, V
Civil Rights, Office for	34, I
Educational Research and Improvement, Office of	34, VII
Elementary and Secondary Education, Office of	34, II
Federal Acquisition Regulation	48, 34
Postsecondary Education, Office of	34, VI
Secretary of Education, Office of	34, Subtitle A
Special Education and Rehabilitative Services, Office of	34, III
Career, Technical, and Adult Education, Office of	34, IV
Educational Research and Improvement, Office of	34, VII
Election Assistance Commission	2, LVIII; 11, II
Elementary and Secondary Education, Office of	34, II
Emergency Oil and Gas Guaranteed Loan Board	13, V
Emergency Steel Guarantee Loan Board	13, IV
Employee Benefits Security Administration	29, XXV
Employees' Compensation Appeals Board	20, IV
Employees Loyalty Board	5, V
Employment and Training Administration	20, V
Employment Standards Administration	20, VI
Endangered Species Committee	50, IV
Energy, Department of	2, IX; 5, XXIII; 10, II, III, X
Federal Acquisition Regulation	48, 9
Federal Energy Regulatory Commission	5, XXIV; 18, I
Property Management Regulations	41, 109
Energy, Office of	7, XXIX
Engineers, Corps of	33, II; 36, III
Engraving and Printing, Bureau of	31, VI
Environmental Protection Agency	2, XV; 5, LIV; 40, I, IV, VII
Federal Acquisition Regulation	48, 15
Property Management Regulations	41, 115
Environmental Quality, Office of	7, XXXI
Equal Employment Opportunity Commission	5, LXII; 29, XIV
Equal Opportunity, Office of Assistant Secretary for	24, I
Executive Office of the President	3, I
Environmental Quality, Council on	40, V
Management and Budget, Office of	2, Subtitle A; 5, III, LXXVII; 14, VI; 48, 99
National Drug Control Policy, Office of	2, XXXVI; 21, III
National Security Council	32, XXI; 47, 2
Presidential Documents	3

Agency	CFR Title, Subtitle or Chapter
Science and Technology Policy, Office of	32, XXIV; 47, II
Trade Representative, Office of the United States	15, XX
Export-Import Bank of the United States	2, XXXV; 5, LII; 12, IV
Family Assistance, Office of	45, II
Farm Credit Administration	5, XXXI; 12, VI
Farm Credit System Insurance Corporation	5, XXX; 12, XIV
Farm Service Agency	7, VII, XVIII
Federal Acquisition Regulation	48, 1
Federal Aviation Administration	14, I
Commercial Space Transportation	14, III
Federal Claims Collection Standards	31, IX
Federal Communications Commission	5, XXIX; 47, I
Federal Contract Compliance Programs, Office of	41, 60
Federal Crop Insurance Corporation	7, IV
Federal Deposit Insurance Corporation	5, XXII; 12, III
Federal Election Commission	5, XXXVII; 11, I
Federal Emergency Management Agency	44, I
Federal Employees Group Life Insurance Federal Acquisition Regulation	48, 21
Federal Employees Health Benefits Acquisition Regulation	48, 16
Federal Energy Regulatory Commission	5, XXIV; 18, I
Federal Financial Institutions Examination Council	12, XI
Federal Financing Bank	12, VIII
Federal Highway Administration	23, I, II
Federal Home Loan Mortgage Corporation	1, IV
Federal Housing Enterprise Oversight Office	12, XVII
Federal Housing Finance Agency	5, LXXX; 12, XII
Federal Housing Finance Board	12, IX
Federal Labor Relations Authority	5, XIV, XLIX; 22, XIV
Federal Law Enforcement Training Center	31, VII
Federal Management Regulation	41, 102
Federal Maritime Commission	46, IV
Federal Mediation and Conciliation Service	29, XII
Federal Mine Safety and Health Review Commission	5, LXXIV; 29, XXVII
Federal Motor Carrier Safety Administration	49, III
Federal Prison Industries, Inc.	28, III
Federal Procurement Policy Office	48, 99
Federal Property Management Regulations	41, 101
Federal Railroad Administration	49, II
Federal Register, Administrative Committee of	1, I
Federal Register, Office of	1, II
Federal Reserve System	12, II
Board of Governors	5, LVIII
Federal Retirement Thrift Investment Board	5, VI, LXXVI
Federal Service Impasses Panel	5, XIV
Federal Trade Commission	5, XLVII; 16, I
Federal Transit Administration	49, VI
Federal Travel Regulation System	41, Subtitle F
Financial Crimes Enforcement Network	31, X
Financial Research Office	12, XVI
Financial Stability Oversight Council	12, XIII
Fine Arts, Commission on	45, XXI
Fiscal Service	31, II
Fish and Wildlife Service, United States	50, I, IV
Food and Drug Administration	21, I
Food and Nutrition Service	7, II
Food Safety and Inspection Service	9, III
Foreign Agricultural Service	7, XV
Foreign Assets Control, Office of	31, V
Foreign Claims Settlement Commission of the United States	45, V
Foreign Service Grievance Board	22, IX
Foreign Service Impasse Disputes Panel	22, XIV
Foreign Service Labor Relations Board	22, XIV
Foreign-Trade Zones Board	15, IV
Forest Service	36, II
General Services Administration	5, LVII; 41, 105
Contract Appeals, Board of	48, 61

Agency	CFR Title, Subtitle or Chapter
Federal Acquisition Regulation	48, 5
Federal Management Regulation	41, 102
Federal Property Management Regulations	41, 101
Federal Travel Regulation System	41, Subtitle F
General	41, 300
Payment From a Non-Federal Source for Travel Expenses	41, 304
Payment of Expenses Connected With the Death of Certain Employees	41, 303
Relocation Allowances	41, 302
Temporary Duty (TDY) Travel Allowances	41, 301
Geological Survey	30, IV
Government Accountability Office	4, I
Government Ethics, Office of	5, XVI
Government National Mortgage Association	24, III
Grain Inspection, Packers and Stockyards Administration	7, VIII; 9, II
Gulf Coast Ecosystem Restoration Council	2, LIX; 40, VIII
Harry S. Truman Scholarship Foundation	45, XVIII
Health and Human Services, Department of	2, III; 5, XLV; 45, Subtitle A,
Centers for Medicare & Medicaid Services	42, IV
Child Support Enforcement, Office of	45, III
Children and Families, Administration for	45, II, III, IV, X
Community Services, Office of	45, X
Family Assistance, Office of	45, II
Federal Acquisition Regulation	48, 3
Food and Drug Administration	21, I
Human Development Services, Office of	45, XIII
Indian Health Service	25, V
Inspector General (Health Care), Office of	42, V
Public Health Service	42, I
Refugee Resettlement, Office of	45, IV
Homeland Security, Department of	2, XXX; 6, I; 8, I
Coast Guard	33, I; 46, I; 49, IV
Coast Guard (Great Lakes Pilotage)	46, III
Customs and Border Protection	19, I
Federal Emergency Management Agency	44, I
Human Resources Management and Labor Relations Systems	5, XCVII
Immigration and Customs Enforcement Bureau	19, IV
Transportation Security Administration	49, XII
HOPE for Homeowners Program, Board of Directors of	24, XXIV
Housing and Urban Development, Department of	2, XXIV; 5, LXV; 24, Subtitle B
Community Planning and Development, Office of Assistant Secretary for	24, V, VI
Equal Opportunity, Office of Assistant Secretary for	24, I
Federal Acquisition Regulation	48, 24
Federal Housing Enterprise Oversight, Office of	12, XVII
Government National Mortgage Association	24, III
Housing—Federal Housing Commissioner, Office of Assistant Secretary for	24, II, VIII, X, XX
Housing, Office of, and Multifamily Housing Assistance Restructuring, Office of	24, IV
Inspector General, Office of	24, XII
Public and Indian Housing, Office of Assistant Secretary for	24, IX
Secretary, Office of	24, Subtitle A, VII
Housing—Federal Housing Commissioner, Office of Assistant Secretary for	24, II, VIII, X, XX
Housing, Office of, and Multifamily Housing Assistance Restructuring, Office of	24, IV
Human Development Services, Office of	45, XIII
Immigration and Customs Enforcement Bureau	19, IV
Immigration Review, Executive Office for	8, V
Independent Counsel, Office of	28, VII
Indian Affairs, Bureau of	25, I, V
Indian Affairs, Office of the Assistant Secretary	25, VI
Indian Arts and Crafts Board	25, II

Agency	CFR Title, Subtitle or Chapter
Indian Health Service	25, V
Industry and Security, Bureau of	15, VII
Information Resources Management, Office of	7, XXVII
Information Security Oversight Office, National Archives and Records Administration	32, XX
Inspector General	
Agriculture Department	7, XXVI
Health and Human Services Department	42, V
Housing and Urban Development Department	24, XII, XV
Institute of Peace, United States	22, XVII
Inter-American Foundation	5, LXIII; 22, X
Interior Department	2, XIV
American Indians, Office of the Special Trustee	25, VII
Endangered Species Committee	50, IV
Federal Acquisition Regulation	48, 14
Federal Property Management Regulations System	41, 114
Fish and Wildlife Service, United States	50, I, IV
Geological Survey	30, IV
Indian Affairs, Bureau of	25, I, V
Indian Affairs, Office of the Assistant Secretary	25, VI
Indian Arts and Crafts Board	25, II
Land Management, Bureau of	43, II
National Indian Gaming Commission	25, III
National Park Service	36, I
Natural Resource Revenue, Office of	30, XII
Ocean Energy Management, Bureau of	30, V
Reclamation, Bureau of	43, I
Safety and Enforcement Bureau, Bureau of	30, II
Secretary of the Interior, Office of	2, XIV; 43, Subtitle A
Surface Mining Reclamation and Enforcement, Office of	30, VII
Internal Revenue Service	26, I
International Boundary and Water Commission, United States and Mexico, United States Section	22, XI
International Development, United States Agency for	22, II
Federal Acquisition Regulation	48, 7
International Development Cooperation Agency, United States	22, XII
International Joint Commission, United States and Canada	22, IV
International Organizations Employees Loyalty Board	5, V
International Trade Administration	15, III; 19, III
International Trade Commission, United States	19, II
Interstate Commerce Commission	5, XL
Investment Security, Office of	31, VIII
James Madison Memorial Fellowship Foundation	45, XXIV
Japan–United States Friendship Commission	22, XVI
Joint Board for the Enrollment of Actuaries	20, VIII
Justice Department	2, XXVIII; 5, XXVIII; 28, I, XI; 40, IV
Alcohol, Tobacco, Firearms, and Explosives, Bureau of	27, II
Drug Enforcement Administration	21, II
Federal Acquisition Regulation	48, 28
Federal Claims Collection Standards	31, IX
Federal Prison Industries, Inc.	28, III
Foreign Claims Settlement Commission of the United States	45, V
Immigration Review, Executive Office for	8, V
Offices of Independent Counsel	28, VI
Prisons, Bureau of	28, V
Property Management Regulations	41, 128
Labor Department	2, XXIX; 5, XLII
Employee Benefits Security Administration	29, XXV
Employees' Compensation Appeals Board	20, IV
Employment and Training Administration	20, V
Employment Standards Administration	20, VI
Federal Acquisition Regulation	48, 29
Federal Contract Compliance Programs, Office of	41, 60
Federal Procurement Regulations System	41, 50

Agency	CFR Title, Subtitle or Chapter
Labor-Management Standards, Office of	29, II, IV
Mine Safety and Health Administration	30, I
Occupational Safety and Health Administration	29, XVII
Office of Workers' Compensation Programs	20, VII
Public Contracts	41, 50
Secretary of Labor, Office of	29, Subtitle A
Veterans' Employment and Training Service, Office of the Assistant Secretary for	41, 61; 20, IX
Wage and Hour Division	29, V
Workers' Compensation Programs, Office of	20, I
Labor-Management Standards, Office of	29, II, IV
Land Management, Bureau of	43, II
Legal Services Corporation	45, XVI
Library of Congress	36, VII
Copyright Royalty Board	37, III
U.S. Copyright Office	37, II
Local Television Loan Guarantee Board	7, XX
Management and Budget, Office of	5, III, LXXVII; 14, VI; 48, 99
Marine Mammal Commission	50, V
Maritime Administration	46, II
Merit Systems Protection Board	5, II, LXIV
Micronesian Status Negotiations, Office for	32, XXVII
Military Compensation and Retirement Modernization Commission	5, XCIV
Millennium Challenge Corporation	22, XIII
Mine Safety and Health Administration	30, I
Minority Business Development Agency	15, XIV
Miscellaneous Agencies	1, IV
Monetary Offices	31, I
Morris K. Udall Scholarship and Excellence in National Environmental Policy Foundation	36, XVI
Museum and Library Services, Institute of	2, XXXI
National Aeronautics and Space Administration	22, XVIII; 5, LIX; 14, V
Federal Acquisition Regulation	48, 18
National Agricultural Library	7, XLI
National Agricultural Statistics Service	7, XXXVI
National and Community Service, Corporation for	2, XXII; 45, XII, XXV
National Archives and Records Administration	2, XXVI; 5, LXVI; 36, XII
Information Security Oversight Office	32, XX
National Capital Planning Commission	1, IV
National Commission for Employment Policy	1, IV
National Commission on Libraries and Information Science	45, XVII
National Council on Disability	34, XII
National Counterintelligence Center	32, XVIII
National Credit Union Administration	5, LXXXVI; 12, VII
National Crime Prevention and Privacy Compact Council	28, IX
National Drug Control Policy, Office of	2, XXXVI; 21, III
National Endowment for the Arts	2, XXXII
National Endowment for the Humanities	2, XXXIII
National Foundation on the Arts and the Humanities	45, XI
National Highway Traffic Safety Administration	23, II, III; 47, VI; 49, V
National Imagery and Mapping Agency	32, I
National Indian Gaming Commission	25, III
National Institute of Food and Agriculture	7, XXXIV
National Institute of Standards and Technology	15, II
National Intelligence, Office of Director of	32, XVII
National Labor Relations Board	5, LXI; 29, I
National Marine Fisheries Service	50, II, IV
National Mediation Board	29, X
National Oceanic and Atmospheric Administration	15, IX; 50, II, III, IV, VI
National Park Service	36, I
National Railroad Adjustment Board	29, III
National Railroad Passenger Corporation (AMTRAK)	49, VII
National Science Foundation	2, XXV; 5, XLIII; 45, VI
Federal Acquisition Regulation	48, 25

Agency	CFR Title, Subtitle or Chapter
National Security Council	32, XXI
National Security Council and Office of Science and Technology Policy	47, II
National Telecommunications and Information Administration	15, XXIII; 47, III, IV
National Transportation Safety Board	49, VIII
Natural Resources Conservation Service	7, VI
Natural Resource Revenue, Office of	30, XII
Navajo and Hopi Indian Relocation, Office of	25, IV
Navy Department	32, VI
Federal Acquisition Regulation	48, 52
Neighborhood Reinvestment Corporation	24, XXV
Northeast Interstate Low-Level Radioactive Waste Commission	10, XVIII
Nuclear Regulatory Commission	2, XX; 5, XLVIII; 10, I
Federal Acquisition Regulation	48, 20
Occupational Safety and Health Administration	29, XVII
Occupational Safety and Health Review Commission	29, XX
Ocean Energy Management, Bureau of	30, V
Offices of Independent Counsel	28, VI
Office of Workers' Compensation Programs	20, VII
Oklahoma City National Memorial Trust	36, XV
Operations Office	7, XXVIII
Overseas Private Investment Corporation	5, XXXIII; 22, VII
Patent and Trademark Office, United States	37, I
Payment From a Non-Federal Source for Travel Expenses	41, 304
Payment of Expenses Connected With the Death of Certain Employees	41, 303
Peace Corps	2, XXXVII; 22, III
Pennsylvania Avenue Development Corporation	36, IX
Pension Benefit Guaranty Corporation	29, XL
Personnel Management, Office of	5, I, XXXV; 45, VIII
Human Resources Management and Labor Relations Systems, Department of Homeland Security	5, XCVII
Federal Acquisition Regulation	48, 17
Federal Employees Group Life Insurance Federal Acquisition Regulation	48, 21
Federal Employees Health Benefits Acquisition Regulation	48, 16
Pipeline and Hazardous Materials Safety Administration	49, I
Postal Regulatory Commission	5, XLVI; 39, III
Postal Service, United States	5, LX; 39, I
Postsecondary Education, Office of	34, VI
President's Commission on White House Fellowships	1, IV
Presidential Documents	3
Presidio Trust	36, X
Prisons, Bureau of	28, V
Privacy and Civil Liberties Oversight Board	6, X
Procurement and Property Management, Office of	7, XXXII
Productivity, Technology and Innovation, Assistant Secretary	37, IV
Public Contracts, Department of Labor	41, 50
Public and Indian Housing, Office of Assistant Secretary for	24, IX
Public Health Service	42, I
Railroad Retirement Board	20, II
Reclamation, Bureau of	43, I
Recovery Accountability and Transparency Board	4, II
Refugee Resettlement, Office of	45, IV
Relocation Allowances	41, 302
Research and Innovative Technology Administration	49, XI
Rural Business-Cooperative Service	7, XVIII, XLII, L
Rural Development Administration	7, XLII
Rural Housing Service	7, XVIII, XXXV, L
Rural Telephone Bank	7, XVI
Rural Utilities Service	7, XVII, XVIII, XLII, L
Safety and Environmental Enforcement, Bureau of	30, II
Saint Lawrence Seaway Development Corporation	33, IV
Science and Technology Policy, Office of	32, XXIV

Agency	CFR Title, Subtitle or Chapter
Science and Technology Policy, Office of, and National Security Council	47, II
Secret Service	31, IV
Securities and Exchange Commission	5, XXXIV; 17, II
Selective Service System	32, XVI
Small Business Administration	2, XXVII; 13, I
Smithsonian Institution	36, V
Social Security Administration	2, XXIII; 20, III; 48, 23
Soldiers' and Airmen's Home, United States	5, XI
Special Counsel, Office of	5, VIII
Special Education and Rehabilitative Services, Office of	34, III
State Department	2, VI; 22, I; 28, XI
Federal Acquisition Regulation	48, 6
Surface Mining Reclamation and Enforcement, Office of	30, VII
Surface Transportation Board	49, X
Susquehanna River Basin Commission	18, VIII
Technology Administration	15, XI
Technology Policy, Assistant Secretary for	37, IV
Tennessee Valley Authority	5, LXIX; 18, XIII
Thrift Supervision Office, Department of the Treasury	12, V
Trade Representative, United States, Office of	15, XX
Transportation, Department of	2, XII; 5, L
Commercial Space Transportation	14, III
Contract Appeals, Board of	48, 63
Emergency Management and Assistance	44, IV
Federal Acquisition Regulation	48, 12
Federal Aviation Administration	14, I
Federal Highway Administration	23, I, II
Federal Motor Carrier Safety Administration	49, III
Federal Railroad Administration	49, II
Federal Transit Administration	49, VI
Maritime Administration	46, II
National Highway Traffic Safety Administration	23, II, III; 47, IV; 49, V
Pipeline and Hazardous Materials Safety Administration	49, I
Saint Lawrence Seaway Development Corporation	33, IV
Secretary of Transportation, Office of	14, II; 49, Subtitle A
Surface Transportation Board	49, X
Transportation Statistics Bureau	49, XI
Transportation, Office of	7, XXXIII
Transportation Security Administration	49, XII
Transportation Statistics Bureau	49, XI
Travel Allowances, Temporary Duty (TDY)	41, 301
Treasury Department	2, X;5, XXI; 12, XV; 17, IV; 31, IX
Alcohol and Tobacco Tax and Trade Bureau	27, I
Community Development Financial Institutions Fund	12, XVIII
Comptroller of the Currency	12, I
Customs and Border Protection	19, I
Engraving and Printing, Bureau of	31, VI
Federal Acquisition Regulation	48, 10
Federal Claims Collection Standards	31, IX
Federal Law Enforcement Training Center	31, VII
Financial Crimes Enforcement Network	31, X
Fiscal Service	31, II
Foreign Assets Control, Office of	31, V
Internal Revenue Service	26, I
Investment Security, Office of	31, VIII
Monetary Offices	31, I
Secret Service	31, IV
Secretary of the Treasury, Office of	31, Subtitle A
Thrift Supervision, Office of	12, V
Truman, Harry S. Scholarship Foundation	45, XVIII
United States and Canada, International Joint Commission	22, IV
United States and Mexico, International Boundary and Water Commission, United States Section	22, XI
U.S. Copyright Office	37, II
Utah Reclamation Mitigation and Conservation Commission	43, III

Agency	CFR Title, Subtitle or Chapter
Veterans Affairs Department	2, VIII; 38, I
Federal Acquisition Regulation	48, 8
Veterans' Employment and Training Service, Office of the Assistant Secretary for	41, 61; 20, IX
Vice President of the United States, Office of	32, XXVIII
Career, Technical and Adult Education, Office of	34, IV
Wage and Hour Division	29, V
Water Resources Council	18, VI
Workers' Compensation Programs, Office of	20, I
World Agricultural Outlook Board	7, XXXVIII

Table of OMB Control Numbers

The OMB control numbers for chapter I of title 26 were consolidated into §§ 601.9000 and 602.101 at 50 FR 10221, Mar. 14, 1985. At 61 FR 58008, Nov. 12, 1996, § 601.9000 was removed. Section 602.101 is reprinted below for the convenience of the user.

PART 602—OMB CONTROL NUMBERS UNDER THE PAPERWORK REDUCTION ACT

§ 602.101 OMB Control numbers.

(a) *Purpose*. This part collects and displays the control numbers assigned to collections of information in Internal Revenue Service regulations by the Office of Management and Budget (OMB) under the Paperwork Reduction Act of 1980. The Internal Revenue Service intends that this part comply with the requirements of §§ 1320.7(f), 1320.12, 1320.13, and 1320.14 of 5 CFR part 1320 (OMB regulations implementing the Paperwork Reduction Act), for the display of control numbers assigned by OMB to collections of information in Internal Revenue Service regulations. This part does not display control numbers assigned by the Office of Management and Budget to collections of information of the Bureau of Alcohol, Tobacco, and Firearms.

(b) *Display*.

CFR part or section where identified and described	Current OMB control No.
1.1(h)–1(e)	1545–1654
1.23–5	1545–0074
1.25–1T	1545–0922
	1545–0930
1.25–2T	1545–0922
	1545–0930
1.25–3T	1545–0922
	1545–0930
1.25–4T	1545–0922
1.25–5T	1545–0922
1.25–6T	1545–0922
1.25–7T	1545–0922
1.25–8T	1545–0922
1.25A–1	1545–1630
1.28–1	1545–0619
1.31–2	1545–0074
1.32–2	1545–0074
1.32–3	1545–1575
1.36B–5	1545–2232
1.37–1	1545–0074
1.37–3	1545–0074
1.41–2	1545–0619
1.41–3	1545–0619
1.41–4A	1545–0074
1.41–4 (b) and (c)	1545–0074
1.41–8(b)	1545–1625
1.41–8(d)	1545–0732
1.41–9	1545–0619
1.42–1T	1545–0984
	1545–0988
1.42–2	1545–1005
1.42–5	1545–1357
1.42–6	1545–1102
1.42–8	1545–1102
1.42–10	1545–1102
1.42–13	1545–1357
1.42–14	1545–1423
1.42–17	1545–1357
1.42–18	1545–2088
1.43–3(a)(3)	1545–1292
1.43–3(b)(3)	1545–1292
1.44B–1	1545–0219
1.45D–1	1545–1765
1.45G–1	1545–2031
1.46–1	1545–0123
	1545–0155
1.46–3	1545–0155
1.46–4	1545–0155
1.46–5	1545–0155
1.46–6	1545–0155
1.46–8	1545–0155
1.46–9	1545–0155
1.46–10	1545–0118
1.46–11	1545–0155
1.47–1	1545–0155
	1545–0166
1.47–3	1545–0155
	1545–0166
1.47–4	1545–0123
1.47–5	1545–0092
1.47–6	1545–0099
1.48–3	1545–0155
1.48–4	1545–0155
	1545–0808
1.48–5	1545–0155
1.48–6	1545–0155
1.48–12	1545–0155
	1545–1783
1.50A–1	1545–0895
1.50A–2	1545–0895
1.50A–3	1545–0895
1.50A–4	1545–0895
1.50A–5	1545–0895
1.50A–6	1545–0895
1.50A–7	1545–0895
1.50B–1	1545–0895
1.50B–2	1545–0895
1.50B–3	1545–0895

CFR part or section where identified and described	Current OMB control No.
1.50B–4	1545–0895
1.50B–5	1545–0895
1.51–1	1545–0219
	1545–0241
	1545–0244
	1545–0797
1.52–2	1545–0219
1.52–3	1545–0219
1.56–1	1545–0123
1.56(g)–1	1545–1233
1.56A–1	1545–0227
1.56A–2	1545–0227
1.56A–3	1545–0227
1.56A–4	1545–0227
1.56A–5	1545–0227
1.57–5	1545–0227
1.58–1	1545–0175
1.58–9(c)(5)(iii)(B)	1545–1093
1.58–9(e)(3)	1545–1093
1.59–1	1545–1903
1.61–2	1545–0771
1.61–2T	1545–0771
1.61–4	1545–0187
1.61–15	1545–0074
1.62–2	1545–1148
1.63–1	1545–0074
1.66–4	1545–1770
1.67–2T	1545–0110
1.67–3	1545–1018
1.67–3T	1545–0118
1.71–1T	1545–0074
1.72–4	1545–0074
1.72–6	1545–0074
1.72–9	1545–0074
1.72–17	1545–0074
1.72–17A	1545–0074
1.72–18	1545–0074
1.74–1	1545–1100
1.79–2	1545–0074
1.79–3	1545–0074
1.83–2	1545–0074
1.83–5	1545–0074
1.83–6	1545–1448
1.103–10	1545–0123
	1545–0940
1.103–15AT	1545–0720
1.103–18	1545–1226
1.103(n)–2T	1545–0874
1.103(n)–4T	1545–0874
1.103A–2	1545–0720
1.105–4	1545–0074
1.105–5	1545–0074
1.105–6	1545–0074
1.108–4	1545–1539
1.108–5	1545–1421
1.108–7	1545–2155
1.108(i)–1	1545–2147
1.108(i)–2	1545–2147
1.110–1	1545–1661
1.117–5	1545–0869
1.118–2	1545–1639
1.119–1	1545–0067
1.120–3	1545–0057
1.121–1	1545–0072
1.121–2	1545–0072
1.121–3	1545–0072
1.121–4	1545–0072
	1545–0091
1.121–5	1545–0072
1.127–2	1545–0768
1.132–1T	1545–0771
1.132–2	1545–0771
1.132–2T	1545–0771
1.132–5	1545–0771
1.132–5T	1545–0771
	1545–1098
1.132–9(b)	1545–1676
1.141–1	1545–1451
1.141–12	1545–1451
1.142–2	1545–1451
1.142(f)(4)–1	1545–1730
1.148–0	1545–1098
1.148–1	1545–1098
1.148–2	1545–1098
	1545–1347
1.148–3	1545–1098
	1545–1347
1.148–4	1545–1098
	1545–1347
1.148–5	1545–1098
	1545–1490
1.148–6	1545–1098
	1545–1451
1.148–7	1545–1098
	1545–1347
1.148–8	1545–1098
1.148–11	1545–1098
	1545–1347
1.149(e)–1	1545–0720
1.150–1	1545–1347
1.151–1	1545–0074
1.152–3	1545–0071
	1545–1783
1.152–4	1545–0074
1.152–4T	1545–0074
1.162–1	1545–0139
1.162–2	1545–0139
1.162–3	1545–0139
1.162–4	1545–0139
1.162–5	1545–0139
1.162–6	1545–0139
1.162–7	1545–0139
1.162–8	1545–0139
1.162–9	1545–0139
1.162–10	1545–0139
1.162–11	1545–0139
1.162–12	1545–0139
1.162–13	1545–0139
1.162–14	1545–0139
1.162–15	1545–0139
1.162–16	1545–0139
1.162–17	1545–0139
1.162–18	1545–0139
1.162–19	1545–0139
1.162–20	1545–0139
1.162–24	1545–2115
1.162–27	1545–1466
1.163–5	1545–0786
	1545–1132
1.163–8T	1545–0995
1.163–10T	1545–0074
1.163–13	1545–1491
1.163(d)–1	1545–1421
1.165–1	1545–0177
1.165–2	1545–0177
1.165–3	1545–0177
1.165–4	1545–0177
1.165–5	1545–0177
1.165–6	1545–0177
1.165–7	1545–0177
1.165–8	1545–0177
1.165–9	1545–0177
1.165–10	1545–0177
1.165–11	1545–0074

CFR part or section where identified and described	Current OMB control No.
	1545–0177
	1545–0786
1.165–12	1545–0786
1.166–1	1545–0123
1.166–2	1545–1254
1.166–4	1545–0123
1.166–10	1545–0123
1.167(a)–5T	1545–1021
1.167(a)–7	1545–0172
1.167(a)–11	1545–0152
	1545–0172
1.167(a)–12	1545–0172
1.167(d)–1	1545–0172
1.167(e)–1	1545–0172
1.167(f)–11	1545–0172
1.167(l)–1	1545–0172
1.168(d)–1	1545–1146
1.168(f)(8)–1T	1545–0923
1.168(i)–1	1545–1331
1.168–5	1545–0172
1.169–4	1545–0172
1.170–1	1545–0074
1.170–2	1545–0074
1.170–3	1545–0123
1.170A–1	1545–0074
1.170A–2	1545–0074
1.170A–4(A)(b)	1545–0123
1.170A–8	1545–0074
1.170A–9	1545–0052
	1545–0074
1.170A–11	1545–0074
	1545–0123
	1545–1868
1.170A–12	1545–0020
	1545–0074
1.170A–13	1545–0074
	1545–0754
	1545–0908
	1545–1431
1.170A–13(f)	1545–1464
1.170A–14	1545–0763
1.171–4	1545–1491
1.171–5	1545–1491
1.172–1	1545–0172
1.172–13	1545–0863
1.173–1	1545–0172
1.174–3	1545–0152
1.174–4	1545–0152
1.175–3	1545–0187
1.175–6	1545–0152
1.177–1	1545–0172
1.179–2	1545–1201
1.179–3	1545–1201
1.179–5	1545–0172
	1545–1201
1.179B–1T	1545–2076
1.179C–1	1545–2103
1.179C–1T	1545–2103
1.180–2	1545–0074
1.181–1	1545–2059
1.181–2	1545–2059
1.181–3	1545–2059
1.182–6	1545–0074
1.183–1	1545–0195
1.183–2	1545–0195
1.183–3	1545–0195
1.183–4	1545–0195
1.190–3	1545–0074
1.194–2	1545–0735
1.194–4	1545–0735
1.195–1	1545–1582
1.197–1T	1545–1425
1.197–2	1545–1671
1.199–6	1545–1966
1.213–1	1545–0074
1.215–1T	1545–0074
1.217–2	1545–0182
1.243–3	1545–0123
1.243–4	1545–0123
1.243–5	1545–0123
1.248–1	1545–0172
1.261–1	1545–1041
1.263(a)–1	1545–2248
1.263(a)–3	1545–2248
1.263(a)–5	1545–1870
1.263(e)–1	1545–0123
1.263A–1	1545–0987
1.263A–1T	1545–0187
1.263A–2	1545–0987
1.263A–3	1545–0987
1.263A–8(b)(2)(iii)	1545–1265
1.263A–9(d)(1)	1545–1265
1.263A–9(f)(1)(ii)	1545–1265
1.263A–9(f)(2)(iv)	1545–1265
1.263A–9(g)(2)(iv)(C)	1545–1265
1.263A–9(g)(3)(iv)	1545–1265
1.265–1	1545–0074
1.265–2	1545–0123
1.266–1	1545–0123
1.267(f)–1	1545–0885
1.268–1	1545–0184
1.274–1	1545–0139
1.274–2	1545–0139
1.274–3	1545–0139
1.274–4	1545–0139
1.274–5	1545–0771
1.274–5A	1545–0139
	1545–0771
1.274–5T	1545–0074
	1545–0172
	1545–0771
1.274–6	1545–0139
	1545–0771
1.274–6T	1545–0074
	1545–0771
1.274–7	1545–0139
1.274–8	1545–0139
1.279–6	1545–0123
1.280C–4	1545–1155
1.280F–3T	1545–0074
1.280G–1	1545–1851
1.281–4	1545–0123
1.302–4	1545–0074
1.305–3	1545–0123
1.305–5	1545–1438
1.307–2	1545–0074
1.312–15	1545–0172
1.316–1	1545–0123
1.331–1	1545–0074
1.332–4	1545–0123
1.332–6	1545–2019
1.336–2	1545–2125
1.336–4	1545–2125
1.337(d)–1	1545–1160
1.337(d)–2	1545–1160
	1545–1774
1.337(d)–4	1545–1633
1.337(d)–5	1545–1672
1.337(d)–6	1545–1672
1.337(d)–7	1545–1672
1.338–2	1545–1658
1.338–5	1545–1658
1.338–10	1545–1658
1.338–11	1545–1990

CFR part or section where identified and described	Current OMB control No.
1.338(h)(10)–1	1545–1658
1.338(i)–1	1545–1990
1.341–7	1545–0123
1.351–3	1545–2019
1.355–5	1545–2019
1.362–2	1545–0123
1.362–4	1545–2247
1.367(a)–1T	1545–0026
1.367(a)–2T	1545–0026
1.367(a)–3	1545–0026
	1545–1478
1.367(a)–3T	1545–2183
1.367(a)–6T	1545–0026
1.367(a)–7	1545–2183
1.367(a)–7T	1545–2183
1.367(a)–8	1545–1271
	1545–2056
	1545–2183
1.367(b)–1	1545–1271
1.367(b)–3T	1545–1666
1.367(d)–1T	1545–0026
1.367(e)–1	1545–1487
1.367(e)–2	1545–1487
1.368–1	1545–1691
1.368–3	1545–2019
1.371–1	1545–0123
1.371–2	1545–0123
1.374–3	1545–0123
1.381(b)–1	1545–0123
1.381(c)(4)–1	1545–0123
	1545–0152
	1545–0879
1.381(c)(5)–1	1545–0123
	1545–0152
1.381(c)(6)–1	1545–0123
	1545–0152
1.381(c)(8)–1	1545–0123
1.381(c)(10)–1	1545–0123
1.381(c)(11)–1(k)	1545–0123
1.381(c)(13)–1	1545–0123
1.381(c)(17)–1	1545–0045
1.381(c)(22)–1	1545–1990
1.381(c)(25)–1	1545–0045
1.382–1T	1545–0123
1.382–2	1545–0123
1.382–2T	1545–0123
1.382–3	1545–1281
	1545–1345
1.382–4	1545–1120
1.382–6	1545–1381
1.382–8	1545–1434
1.382–9	1545–1120
	1545–1260
	1545–1275
	1545–1324
1.382–11	1545–2019
1.382–91	1545–1260
	1545–1324
1.383–1	1545–0074
	1545–1120
1.401–1	1545–0020
	1545–0197
	1545–0200
	1545–0534
	1545–0710
1.401(a)–11	1545–0710
1.401(a)–20	1545–0928
1.401(a)–31	1545–1341
1.401(a)–50	1545–0710
1.401(a)(9)–1	1545–1573
1.401(a)(9)–3	1545–1466
1.401(a)(9)–4	1545–1573

CFR part or section where identified and described	Current OMB control No.
1.401(a)(9)–6	1545–2234
1.401(a)(31)–1	1545–1341
1.401(b)–1	1545–0197
1.401(f)–1	1545–0710
1.401(k)–1	1545–1039
	1545–1069
	1545–1669
	1545–1930
1.401(k)–2	1545–1669
1.401(k)–3	1545–1669
1.401(k)–4	1545–1669
1.401(m)–3	1545–1699
1.401–12(n)	1545–0806
1.401–14	1545–0710
1.402(c)–2	1545–1341
1.402(f)–1	1545–1341
	1545-1632
1.402A–1	1545–1992
1.403(b)–1	1545–0710
1.403(b)–3	1545–0996
1.403(b)–7	1545–1341
1.403(b)–10	1545–2068
1.404(a)–4	1545–0710
1.404(a)–12	1545–0710
1.404A–2	1545–0123
1.404A–6	1545–0123
1.408–2	1545–0390
1.408–5	1545–0747
1.408–6	1545–0203
	1545–0390
1.408–7	1545–0119
1.408(q)–1	1545–1841
1.408A–2	1545–1616
1.408A–4	1545–1616
1.408A–5	1545–1616
1.408A–7	1545–1616
1.410(a)–2	1545–0710
1.410(d)–1	1545–0710
1.411(a)–11	1545–1471
	1545–1632
1.411(d)–4	1545–1545
1.411(d)–6	1545–1477
1.412(b)–5	1545–0710
1.412(c)(1)–2	1545–0710
1.412(c)(2)–1	1545–0710
1.412(c)(3)–2	1545–0710
1.414(c)–5	1545–0797
1.414(r)–1	1545–1221
1.415–2	1545–0710
1.415–6	1545–0710
1.417(a)(3)–1	1545–0928
1.417(e)–1	1545–1471
	1545–1724
1.417(e)–1T	1545–1471
1.419A(f)(6)–1	1545–1795
1.422–1	1545–0820
1.430(f)–1	1545–2095
1.430(g)–1	1545–2095
1.430(h)(2)–1	1545–2095
1.436–1	1545–2095
1.441–2	1545–1748
1.442–1	1545–0074
	1545–0123
	1545–0134
	1545–0152
	1545–0820
	1545–1748
1.443–1	1545–0123
1.444–3T	1545–1036
1.444–4	1545–1591
1.446–1	1545–0074
	1545–0152

CFR part or section where identified and described	Current OMB control No.
1.446–4(d)	1545–1412
1.448–1(g)	1545–0152
1.448–1(h)	1545–0152
1.448–1(i)	1545–0152
1.448–2	1545–1855
1.448–2T	1545–0152
	1545–1855
1.451–1	1545–0091
1.451–4	1545–0123
1.451–5	1545–0074
1.451–6	1545–0074
1.451–7	1545–0074
1.453–1	1545–0152
1.453–2	1545–0152
1.453–8	1545–0152
	1545–0228
1.453–10	1545–0152
1.453A–1	1545–0152
	1545–1134
1.453A–2	1545–0152
	1545–1134
1.453A–3	1545–0963
1.454–1	1545–0074
1.455–2	1545–0152
1.455–6	1545–0123
1.456–2	1545–0123
1.456–6	1545–0123
1.456–7	1545–0123
1.457–8	1545–1580
1.458–1	1545–0879
1.458–2	1545–0152
1.460–1	1545–1650
1.460–6	1545–1031
	1545–1572
	1545–1732
1.461–1	1545–0074
1.461–2	1545–0096
1.461–4	1545–0917
1.461–5	1545–0917
1.463–1T	1545–0916
1.465–1T	1545–0712
1.466–1T	1545–0152
1.466–4	1545–0152
1.468A–3	1545–1269
	1545–1378
	1545–1511
1.468A–3(h), 1.468A–7, and 1.468A–8(d)	1545–2091
1.468A–4	1545–0954
1.468A–7	1545–0954
	1545–1511
1.468A–8	1545–1269
1.468B–1	1545–1631
1.468B–1(j)	1545–1299
1.468B–2(k)	1545–1299
1.468B–2(l)	1545–1299
1.468B–3(b)	1545–1299
1.468B–3(e)	1545–1299
1.468B–5(b)	1545–1299
1.468B–9	1545–1631
1.469–1	1545–1008
1.469–2T	1545–0712
	1545–1091
1.469–4T	1545–0985
	1545–1037
1.469–7	1545–1244
1.471–2	1545–0123
1.471–5	1545–0123
1.471–6	1545–0123
1.471–8	1545–0123
1.471–11	1545–0123
	1545–0152
1.472–1	1545–0042
	1545–0152
1.472–2	1545–0152
1.472–3	1545–0042
1.472–5	1545–0152
1.472–8	1545–0028
	1545–0042
	1545–1767
1.475(a)–4	1545–1945
1.475(b)–4	1545–1496
1.481–4	1545–0152
1.481–5	1545–0152
1.482–1	1545–1364
1.482–4	1545–1364
1.482–7	1545–1364
	1545–1794
1.482–9(b)	1545–2149
1.501(a)–1	1545–0056
	1545–0057
1.501(c)(3)–1	1545–0056
1.501(c)(9)–5	1545–0047
1.501(c)(17)–3	1545–0047
1.501(e)–1	1545–0814
1.501(r)–3	1545–0047
1.501(r)–4	1545–0047
1.501(r)–6	1545–0047
1.503(c)–1	1545–0047
	1545–0052
1.505(c)–1T	1545–0916
1.507–1	1545–0052
1.507–2	1545–0052
1.508–1	1545–0052
	1545–0056
1.509(a)–3	1545–0047
1.509(a)–4	1545–2157
1.509(a)–5	1545–0047
1.509(c)–1	1545–0052
1.512(a)–1	1545–0687
1.512(a)–4	1545–0047
	1545–0687
1.521–1	1545–0051
	1545–0058
1.527–2	1545–0129
1.527–5	1545–0129
1.527–6	1545–0129
1.527–9	1545–0129
1.528–8	1545–0127
1.533–2	1545–0123
1.534–2	1545–0123
1.542–3	1545–0123
1.545–2	1545–0123
1.545–3	1545–0123
1.547–2	1545–0045
	1545–0123
1.547–3	1545–0123
1.551–4	1545–0074
1.552–3	1545–0099
1.552–4	1545–0099
1.552–5	1545–0099
1.556–2	1545–0704
1.561–1	1545–0044
1.561–2	1545–0123
1.562–3	1545–0123
1.563–2	1545–0123
1.564–1	1545–0123
1.565–1	1545–0043
	1545–0123
1.565–2	1545–0043
1.565–3	1545–0043
1.565–5	1545–0043
1.565–6	1545–0043
1.585–1	1545–0123
1.585–3	1545–0123

CFR part or section where identified and described	Current OMB control No.
1.585–8	1545–1290
1.586–2	1545–0123
1.593–1	1545–0123
1.593–6	1545–0123
1.593–6A	1545–0123
1.593–7	1545–0123
1.595–1	1545–0123
1.597–2	1545–1300
1.597–4	1545–1300
1.597–6	1545–1300
1.597–7	1545–1300
1.611–2	1545–0099
1.611–3	1545–0007
	1545–0099
	1545–1784
1.612–4	1545–0074
1.612–5	1545–0099
1.613–3	1545–0099
1.613–4	1545–0099
1.613–6	1545–0099
1.613–7	1545–0099
1.613A–3	1545–0919
1.613A–3(e)	1545–1251
1.613A–3(l)	1545–0919
1.613A–5	1545–0099
1.613A–6	1545–0099
1.614–2	1545–0099
1.614–3	1545–0099
1.614–5	1545–0099
1.614–6	1545–0099
1.614–8	1545–0099
1.617–1	1545–0099
1.617–3	1545–0099
1.617–4	1545–0099
1.631–1	1545–0007
1.631–2	1545–0007
1.641(b)–2	1545–0092
1.642(c)–1	1545–0092
1.642(c)–2	1545–0092
1.642(c)–5	1545–0074
1.642(c)–6	1545–0020
	1545–0074
	1545–0092
1.642(g)–1	1545–0092
1.642(i)–1	1545–0092
1.645–1	1545–1578
1.663(b)–2	1545–0092
1.664–1	1545–0196
1.664–1(a)(7)	1545–1536
1.664–1(c)	1545–2101
1.664–2	1545–0196
1.664–3	1545–0196
1.664–4	1545–0020
	1545–0196
1.665(a)–0A through	
1.665(g)–2A	1545–0192
1.666(d)–1A	1545–0092
1.671–4	1545–1442
1.671–5	1545–1540
1.701–1	1545–0099
1.702–1	1545–0074
1.703–1	1545–0099
1.704–2	1545–1090
1.706–1	1545–0074
	1545–0099
	1545–0134
1.706–1T	1545–0099
1.707–3(c)(2)	1545–1243
1.707–5(a)(7)(ii)	1545–1243
1.707–6(c)	1545–1243
1.707–8	1545–1243
1.708–1	1545–0099

CFR part or section where identified and described	Current OMB control No.
1.732–1	1545–0099
	1545–1588
1.736–1	1545–0074
1.743–1	1545–0074
	1545–1588
1.751–1	1545–0074
	1545–0099
	1545–0941
1.752–2	1545–1905
1.752–5	1545–1090
1.752–7	1545–1843
1.754–1	1545–0099
1.755–1	1545–0099
1.761–2	1545–1338
1.801–1	1545–0123
	1545–0128
1.801–3	1545–0123
1.801–5	1545–0128
1.801–8	1545–0128
1.804–4	1545–0128
1.811–2	1545–0128
1.812–2	1545–0128
1.815–6	1545–0128
1.818–4	1545–0128
1.818–5	1545–0128
1.818–8	1545–0128
1.819–2	1545–0128
1.821–1	1545–1027
1.821–3	1545–1027
1.821–4	1545–1027
1.822–5	1545–1027
1.822–6	1545–1027
1.822–8	1545–1027
1.822–9	1545–1027
1.823–2	1545–1027
1.823–5	1545–1027
1.823–6	1545–1027
1.825–1	1545–1027
1.826–1	1545–1027
1.826–2	1545–1027
1.826–3	1545–1027
1.826–4	1545–1027
1.826–6	1545–1027
1.831–3	1545–0123
1.831–4	1545–0123
1.832–4	1545–1227
1.832–5	1545–0123
1.848–2(g)(8)	1545–1287
1.848–2(h)(3)	1545–1287
1.848–2(i)(4)	1545–1287
1.851–2	1545–1010
1.851–4	1545–0123
1.852–1	1545–0123
1.852–4	1545–0123
	1545–0145
1.852–6	1545–0123
	1545–0144
1.852–7	1545–0074
1.852–9	1545–0074
	1545–0123
	1545–0144
	1545–0145
	1545–1783
1.852–11	1545–1094
1.853–3	1545–2035
1.853–4	1545–2035
1.854–2	1545–0123
1.855–1	1545–0123
1.856–2	1545–0123
	1545–1004
1.856–6	1545–0123
1.856–7	1545–0123

CFR part or section where identified and described	Current OMB control No.
1.856–8	1545–0123
1.857–8	1545–0123
1.857–9	1545–0074
1.858–1	1545–0123
1.860–2	1545–0045
1.860–4	1545–0045
	1545–1054
	1545–1057
1.860E–1	1545–1675
1.860E–2(a)(5)	1545–1276
1.860E–2(a)(7)	1545–1276
1.860E–2(b)(2)	1545–1276
1.860G–2	1545–2110
1.861–2	1545–0089
1.861–3	1545–0089
1.861–4	1545–1900
1.861–8	1545–0126
1.861–8(e)(6) and (g)	1545–1224
1.861–9T	1545–0121
	1545–1072
1.861–18	1545–1594
1.863–1	1545–1476
1.863–3	1545–1476
	1545–1556
1.863–3A	1545–0126
1.863–4	1545–0126
1.863–7	1545–0132
1.863–8	1545–1718
1.863–9	1545–1718
1.864–4	1545–0126
1.871–1	1545–0096
1.871–6	1545–0795
1.871–7	1545–0089
1.871–10	1545–0089
	1545–0165
1.874–1	1545–0089
1.881–4	1545–1440
1.882–4	1545–0126
1.883–0	1545–1677
1.883–1	1545–1677
1.883–2	1545–1677
1.883–3	1545–1677
1.883–4	1545–1677
1.883–5	1545–1677
1.884–0	1545–1070
1.884–1	1545–1070
1.884–2	1545–1070
1.884–2T	1545–0126
	1545–1070
1.884–4	1545–1070
1.884–5	1545–1070
1.892–1T	1545–1053
1.892–2T	1545–1053
1.892–3T	1545–1053
1.892–4T	1545–1053
1.892–5T	1545–1053
1.892–6T	1545–1053
1.892–7T	1545–1053
1.897–2	1545–0123
	1545–0902
1.897–3	1545–0123
1.897–5T	1545–0902
1.897–6T	1545–0902
1.901–2	1545–0746
1.901–2A	1545–0746
1.901–3	1545–0122
1.902–1	1545–0122
	1545–1458
1.904–1	1545–0121
	1545–0122
1.904–2	1545–0121
	1545–0122
1.904–3	1545–0121
1.904–4	1545–0121
1.904–5	1545–0121
1.904–7	1545–2104
1.904–7T	1545–2104
1.904(f)–1	1545–0121
	1545–0122
1.904(f)–2	1545–0121
1.904(f)–3	1545–0121
1.904(f)–4	1545–0121
1.904(f)–5	1545–0121
1.904(f)–6	1545–0121
1.904(f)–7	1545–1127
1.905–2	1545–0122
1.905–3T	1545–1056
1.905–4T	1545–1056
1.905–5T	1545–1056
1.911–1	1545–0067
	1545–0070
1.911–2	1545–0067
	1545–0070
1.911–3	1545–0067
	1545–0070
1.911–4	1545–0067
	1545–0070
1.911–5	1545–0067
	1545–0070
1.911–6	1545–0067
	1545–0070
1.911–7	1545–0067
	1545–0070
1.913–13	1545–0067
1.921–1T	1545–0190
	1545–0884
	1545–0935
	1545–0939
1.921–2	1545–0884
1.921–3T	1545–0935
1.923–1T	1545–0935
1.924(a)–1T	1545–0935
1.925(a)–1T	1545–0935
1.925(b)–1T	1545–0935
1.926(a)–1T	1545–0935
1.927(a)–1T	1545–0935
1.927(b)–1T	1545–0935
1.927(d)–1	1545–0884
1.927(d)–2T	1545–0935
1.927(e)–1T	1545–0935
1.927(e)–2T	1545–0935
1.927(f)–1	1545–0884
1.931–1	1545–0074
	1545–0123
1.934–1	1545–0782
1.935–1	1545–0074
	1545–0087
	1545–0803
1.936–1	1545–0215
	1545–0217
1.936–4	1545–0215
1.936–5	1545–0704
1.936–6	1545–0215
1.936–7	1545–0215
1.936–10(c)	1545–1138
1.937–1	1545–1930
1.952–2	1545–0126
1.953–2	1545–0126
1.954–1	1545–1068
1.954–2	1545–1068
1.955–2	1545–0123
1.955–3	1545–0123
1.955A–2	1545–0755
1.955A–3	1545–0755

CFR part or section where identified and described	Current OMB control No.
1.956–1	1545–0704
1.956–2	1545–0704
1.959–1	1545–0704
1.959–2	1545–0704
1.960–1	1545–0122
1.962–2	1545–0704
1.962–3	1545–0704
1.962–4	1545–0704
1.964–1	1545–0126
	1545–0704
	1545–1072
	1545–2104
1.964–3	1545–0126
1.970–2	1545–0126
1.985–2	1545–1051
	1545–1131
1.985–3	1545–1051
1.988–0	1545–1131
1.988–1	1545–1131
1.988–2	1545–1131
1.988–3	1545–1131
1.988–4	1545–1131
1.988–5	1545–1131
1.988–6	1545–1831
1.992–1	1545–0190
	1545–0938
1.992–2	1545–0190
	1545–0884
	1545–0938
1.992–3	1545–0190
	1545–0938
1.992–4	1545–0190
	1545–0938
1.993–3	1545–0938
1.993–4	1545–0938
1.994–1	1545–0938
1.995–5	1545–0938
1.1001–1	1545–1902
1.1012–1	1545–0074
	1545–1139
1.1014–4	1545–0184
1.1015–1	1545–0020
1.1017–1	1545–1539
1.1031(d)–1T	1545–1021
1.1033(a)–2	1545–0184
1.1033(g)–1	1545–0184
1.1034–1	1545–0072
1.1039–1	1545–0184
1.1041–1T	1545–0074
1.1041–2	1545–1751
1.1042–1T	1545–0916
1.1044(a)–1	1545–1421
1.1045–1	1545–1893
1.1060–1	1545–1658
	1545–1990
1.1071–1	1545–0184
1.1071–4	1545–0184
1.1081–4	1545–0028
	1545–0046
	1545–0123
1.1081–11	1545–2019
1.1082–1	1545–0046
1.1082–2	1545–0046
1.1082–3	1545–0046
	1545–0184
1.1082–4	1545–0046
1.1082–5	1545–0046
1.1082–6	1545–0046
1.1083–1	1545–0123
1.1092(b)–1T	1545–0644
1.1092(b)–2T	1545–0644
1.1092(b)–3T	1545–0644
1.1092(b)–4T	1545–0644
1.1092(b)–5T	1545–0644
1.1211–1	1545–0074
1.1212–1	1545–0074
1.1221–2	1545–1480
1.1231–1	1545–0177
	1545–0184
1.1231–2	1545–0177
	1545–0184
1.1231–2	1545–0074
1.1232–3	1545–0074
1.1237–1	1545–0184
1.1239–1	1545–0091
1.1242–1	1545–0184
1.1243–1	1545–0123
1.1244(e)–1	1545–0123
	1545–1447
1.1245–1	1545–0184
1.1245–2	1545–0184
1.1245–3	1545–0184
1.1245–4	1545–0184
1.1245–5	1545–0184
1.1245–6	1545–0184
1.1247–1	1545–0122
1.1247–2	1545–0122
1.1247–4	1545–0122
1.1247–5	1545–0122
1.1248–7	1545–0074
1.1248(f)–2	1545–2183
1.1248(f)–3T	1545–2183
1.1250–1	1545–0184
1.1250–2	1545–0184
1.1250–3	1545–0184
1.1250–4	1545–0184
1.1250–5	1545–0184
1.1251–1	1545–0184
1.1251–2	1545–0074
	1545–0184
1.1251–3	1545–0184
1.1251–4	1545–0184
1.1252–1	1545–0184
1.1252–2	1545–0184
1.1254–1(c)(3)	1545–1352
1.1254–4	1545–1493
1.1254–5(d)(2)	1545–1352
1.1258–1	1545–1452
1.1272–3	1545–1353
1.1273–2(f)(9)	1545–1353
1.1273–2(h)(2)	1545–1353
1.1274–3(d)	1545–1353
1.1274–5(b)	1545–1353
1.1274A–1(c)	1545–1353
1.1275–2	1545–1450
1.1275–3	1545–0887
	1545–1353
	1545–1450
1.1275–4	1545–1450
1.1275–6	1545–1450
1.1287–1	1545–0786
1.1291–9	1545–1507
1.1291–10	1545–1304
	1545–1507
1.1294–1T	1545–1002
	1545–1028
1.1295–1	1545–1555
1.1295–3	1545–1555
1.1298–3	1545–1507
1.1301–1	1545–1662
1.1311(a)–1	1545–0074
1.1361–1	1545–0731
	1545–1591
	1545–2114

CFR part or section where identified and described	Current OMB control No.
1.1361–3	1545–1590
1.1361–5	1545–1590
1.1362–1	1545–1308
1.1362–2	1545–1308
1.1362–3	1545–1308
1.1362–4	1545–1308
1.1362–5	1545–1308
1.1362–6	1545–1308
1.1362–7	1545–1308
1.1362–8	1545–1590
1.1363–2	1545–1906
1.1366–1	1545–1613
1.1367–1(f)	1545–1139
1.1368–1(f)(2)	1545–1139
1.1368–1(f)(3)	1545–1139
1.1368–1(f)(4)	1545–1139
1.1368–1(g)(2)	1545–1139
1.1374–1A	1545–0130
1.1377–1	1545–1462
1.1378–1	1545–1748
1.1383–1	1545–0074
1.1385–1	1545–0074
	1545–0098
1.1388–1	1545–0118
	1545–0123
1.1397E–1	1545–1908
1.1398–1	1545–1375
1.1398–2	1545–1375
1.1402(a)–2	1545–0074
1.1402(a)–5	1545–0074
1.1402(a)–11	1545–0074
1.1402(a)–15	1545–0074
1.1402(a)–16	1545–0074
1.1402(b)–1	1545–0171
1.1402(c)–2	1545–0074
1.1402(e)(1)–1	1545–0074
1.1402(e)(2)–1	1545–0074
1.1402(e)–1A	1545–0168
1.1402(e)–2A	1545–0168
1.1402(e)–3A	1545–0168
1.1402(e)–4A	1545–0168
1.1402(e)–5A	1545–0168
1.1402(f)–1	1545–0074
1.1402(h)–1	1545–0064
1.1411–10(g)	1545–2227
1.1441–1	1545–1484
1.1441–2	1545–0795
1.1441–3	1545–0165
	1545–0795
1.1441–4	1545–1484
1.1441–5	1545–0096
	1545–0795
	1545–1484
1.1441–6	1545–0055
	1545–0795
	1545–1484
1.1441–7	1545–0795
1.1441–8	1545–1053
	1545–1484
1.1441–9	1545–1484
1.1443–1	1545–0096
1.1445–1	1545–0902
1.1445–2	1545–0902
	1545–1060
	1545–1797
1.1445–3	1545–0902
	1545–1060
	1545–1797
1.1445–4	1545–0902
1.1445–5	1545–0902
1.1445–6	1545–0902
	1545–1060

CFR part or section where identified and described	Current OMB control No.
1.1445–7	1545–0902
1.1445–8	1545–0096
1.1445–9T	1545–0902
1.1445–10T	1545–0902
1.1446–1	1545–1934
1.1446–3	1545–1934
1.1446–4	1545–1934
1.1446–5	1545–1934
1.1446–6	1545–1934
1.1451–1	1545–0054
1.1451–2	1545–0054
1.1461–1	1545–0054
	1545–0055
	1545–0795
	1545–1484
1.1461–2	1545–0054
	1545–0055
	1545–0096
	1545–0795
1.1462–1	1545–0795
1.1492–1	1545–0026
1.1494–1	1545–0026
1.1502–5	1545–0257
1.1502–9	1545–1634
1.1502–9A	1545–0121
1.1502–13	1545–0123
	1545–0885
	1545–1161
	1545–1433
1.1502–16	1545–0123
1.1502–18	1545–0123
1.1502–19	1545–0123
	1545–1774
1.1502–20	1545–1774
1.1502–21	1545–1237
1.1502–21T	1545–2171
1.1502–31	1545–1344
1.1502–32	1545–1344
	1545–1774
1.1502–33	1545–1344
1.1502–35	1545–1828
1.1502–36	1545–2096
1.1502–47	1545–0123
1.1502–75	1545–0025
	1545–0123
	1545–0133
	1545–0152
1.1502–76	1545–1344
1.1502–76T	1545–2019
1.1502–77	1545–1699
1.1502–77A	1545–0123
	1545–1046
1.1502–77B	1545–1699
1.1502–78	1545–0582
1.1502–95	1545–1218
1.1502–95A	1545–1218
1.1502–96	1545–1218
1.1503–2	1545–1583
1.1503–2A	1545–1083
1.1503(d)–1	1545–1946
1.1503(d)–3	1545–1946
1.1503(d)–4	1545–1946
1.1503(d)–5	1545–1946
1.1503(d)–6	1545–1946
1.1552–1	1545–0123
1.1561–3	1545–0123
1.1563–1	1545–0123
	1545–0797
	1545–2019
1.1563–3	1545–0123
1.5000A–3	1545–0074
1.5000A–4	1545–0074

CFR part or section where identified and described	Current OMB control No.
1.6001–1	1545–0058
	1545–0074
	1545–0099
	1545–0123
	1545–0865
1.6011–1	1545–0055
	1545–0074
	1545–0085
	1545–0089
	1545–0090
	1545–0091
	1545–0096
	1545–0121
	1545–0458
	1545–0666
	1545–0675
	1545–0908
1.6011–2	1545–0055
	1545–0938
1.6011–3	1545–0238
	1545–0239
1.6011–4	1545–1685
1.6012–1	1545–0067
	1545–0074
	1545–0085
	1545–0089
	1545–0675
1.6012–2	1545–0047
	1545–0051
	1545–0067
	1545–0123
	1545–0126
	1545–0128
	1545–0130
	1545–0175
	1545–0687
	1545–0890
	1545–1023
	1545–1027
1.6012–3	1545–0047
	1545–0067
	1545–0092
	1545–0196
	1545–0687
1.6012–4	1545–0067
1.6012–5	1545–0067
	1545–0936
	1545–0967
	1545–0970
	1545–0991
	1545–1023
	1545–1033
	1545–1079
1.6012–6	1545–0067
	1545–0089
	1545–0129
1.6013–1	1545–0074
1.6013–2	1545–0091
1.6013–6	1545–0074
1.6013–7	1545–0074
1.6015–5	1545–1719
1.6015(a)–1	1545–0087
1.6015(b)–1	1545–0087
1.6015(d)–1	1545–0087
1.6015(e)–1	1545–0087
1.6015(f)–1	1545–0087
1.6015(g)–1	1545–0087
1.6015(h)–1	1545–0087
1.6015(i)–1	1545–0087
1.6017–1	1545–0074
	1545–0087
	1545–0090

CFR part or section where identified and described	Current OMB control No.
1.6031(a)–1	1545–1583
1.6031(b)–1T	1545–0099
1.6031(c)–1T	1545–0099
1.6032–1	1545–0099
1.6033–2	1545–0047
	1545–0049
	1545–0052
	1545–0092
	1545–0687
	1545–1150
	1545–2117
1.6033–3	1545–0052
1.6034–1	1545–0092
	1545–0094
1.6035–1	1545–0704
1.6035–2	1545–0704
1.6035–3	1545–0704
1.6037–1	1545–0130
	1545–1023
1.6038–2	1545–1617
	1545–2020
1.6038–3	1545–1617
1.6038A–2	1545–1191
1.6038A–3	1545–1191
	1545–1440
1.6038B–1	1545–1617
	1545–2183
1.6038B–1T	1545–0026
	1545–2183
1.6038B–2	1545–1617
1.6039–2	1545–0820
1.6041–1	1545–0008
	1545–0108
	1545–0112
	1545–0115
	1545–0120
	1545–0295
	1545–0350
	1545–0367
	1545–0387
	1545–0441
	1545–0957
	1545–1705
1.6041–2	1545–0008
	1545–0119
	1545–0350
	1545–0441
	1545–1729
1.6041–3	1545–1148
1.6041–4	1545–0115
	1545–0295
	1545–0367
	1545–0387
	1545–0957
1.6041–5	1545–0295
	1545–0367
	1545–0387
	1545–0957
1.6041–6	1545–0008
	1545–0115
1.6041–7	1545–0112
	1545–0295
	1545–0350
	1545–0367
	1545–0387
	1545–0441
	1545–0957
1.6042–1	1545–0110
1.6042–2	1545–0110
	1545–0295
	1545–0367
	1545–0387

CFR part or section where identified and described	Current OMB control No.
	1545–0957
1.6042–3	1545–0295
	1545–0367
	1545–0387
	1545–0957
1.6042–4	1545–0110
1.6043–1	1545–0041
1.6043–2	1545–0041
	1545–0110
	1545–0295
	1545–0387
1.6043–3	1545–0047
1.6044–1	1545–0118
1.6044–2	1545–0118
1.6044–3	1545–0118
1.6044–4	1545–0118
1.6044–5	1545–0118
1.6045–1	1545–0715
	1545–1705
1.6045–1(c)(3)(xi)(C)	1545–2186
1.6045–1(n)(5)	1545–2186
1.6045A–1	1545–2186
1.6045–2	1545–0115
1.6045–4	1545–1085
1.6046–1	1545–0704
	1545–0794
	1545–1317
1.6046–2	1545–0704
1.6046–3	1545–0704
1.6046A	1545–1646
1.6047–1	1545–0119
	1545–0295
	1545–0387
1.6047–2	1545–2234
1.6049–1	1545–0112
	1545–0117
	1545–0295
	1545–0367
	1545–0387
	1545–0597
	1545–0957
1.6049–2	1545–0117
1.6049–3	1545–0117
1.6049–4	1545–0096
	1545–0112
	1545–0117
	1545–1018
	1545–1050
1.6049–5	1545–0096
	1545–0112
	1545–0117
1.6049–6	1545–0096
1.6049–7	1545–1018
1.6049–7T	1545–0112
	1545–0117
	1545–0118
1.6050A–1	1545–0115
1.6050B–1	1545–0120
1.6050D–1	1545–0120
	1545–0232
1.6050E–1	1545–0120
1.6050H–1	1545–0901
	1545–1380
1.6050H–1T	1545–0901
1.6050H–2	1545–0901
	1545–1339
	1545–1380
1.6050I–2	1545–1449
1.6050J–1T	1545–0877
1.6050K–1	1545–0941
1.6050S–1	1545–1678
1.6050S–2	1545–1729
1.6050S–3	1545–1678
1.6050S–4	1545–1729
1.6052–1	1545–0008
1.6052–2	1545–0008
1.6055–1	1545–2252
1.6055–2	1545–2252
1.6060–1	1545–0074
1.6060–1(a)(1)	1545–1231
1.6061–1	1545–0123
1.6062–1	1545–0123
1.6063–1	1545–0123
1.6065–1	1545–0123
1.6071–1	1545–0123
	1545–0810
1.6072–1	1545–0074
1.6072–2	1545–0123
	1545–0807
1.6073–1	1545–0087
1.6073–2	1545–0087
1.6073–3	1545–0087
1.6073–4	1545–0087
1.6074–1	1545–0123
1.6074–2	1545–0123
1.6081–1	1545–0066
	1545–0148
	1545–0233
	1545–1057
	1545–1081
1.6081–2	1545–0148
	1545–1036
	1545–1054
1.6081–3	1545–0233
1.6081–4	1545–0188
	1545–1479
1.6081–6	1545–0148
	1545–1054
1.6081–7	1545–0148
	1545–1054
1.6091–3	1545–0089
1.6107–1	1545–0074
	1545–1231
1.6109–1	1545–0074
1.6109–2	1545–2176
1.6115–1	1545–1464
1.6151–1	1545–0074
1.6153–1	1545–0087
1.6153–4	1545–0087
1.6161–1	1545–0087
1.6162–1	1545–0087
1.6164–1	1545–0135
1.6164–2	1545–0135
1.6164–3	1545–0135
1.6164–5	1545–0135
1.6164–6	1545–0135
1.6164–7	1545–0135
1.6164–8	1545–0135
1.6164–9	1545–0135
1.6302–1	1545–0257
1.6302–2	1545–0098
	1545–0257
1.6411–1	1545–0098
	1545–0135
	1545–0582
1.6411–2	1545–0098
	1545–0582
1.6411–3	1545–0098
	1545–0582
1.6411–4	1545–0582
1.6414–1	1545–0096
1.6425–1	1545–0170
1.6425–2	1545–0170
1.6425–3	1545–0170

CFR part or section where identified and described	Current OMB control No.
1.6654–1	1545–0087
	1545–0140
1.6654–2	1545–0087
1.6654–3	1545–0087
1.6654–4	1545–0087
1.6655(e)–1	1545–1421
1.6662–3(c)	1545–0889
1.6662–4(e) and (f)	1545–0889
1.6662–6	1545–1426
1.6694–1	1545–0074
1.6694–2	1545–0074
1.6694–2(c)	1545–1231
1.6694–2(c)(3)	1545–1231
1.6694–3(e)	1545–1231
1.6695–1	1545–0074
	1545–1385
1.6695–2	1545–1570
1.6696–1	1545–0074
	1545–0240
1.6851–1	1545–0086
	1545–0138
1.6851–2	1545–0086
	1545–0138
1.7476–1	1545–0197
1.7476–2	1545–0197
1.7519–2T	1545–1036
1.7520–1	1545–1343
1.7520–2	1545–1343
1.7520–3	1545–1343
1.7520–4	1545–1343
1.7701(l)–3	1545–1642
1.7872–15	1545–1792
1.9100–1	1545–0074
1.9101–1	1545–0008
2.1–4	1545–0123
2.1–5	1545–0123
2.1–6	1545–0123
2.1–10	1545–0123
2.1–11	1545–0123
2.1–12	1545–0123
2.1–13	1545–0123
2.1–20	1545–0123
2.1–22	1545–0123
2.1–26	1545–0123
3.2	1545–0123
4.954–1	1545–1068
4.954–2	1545–1068
5.6411–1	1545–0042
	1545–0074
	1545–0098
	1545–0129
	1545–0172
	1545–0582
	1545–0619
5c.44F–1	1545–0619
5c.128–1	1545–0123
5c.168(f)(8)–1	1545–0123
5c.168(f)(8)–2	1545–0123
5c.168(f)(8)–6	1545–0123
5c.168(f)(8)–8	1545–0123
5c.305–1	1545–0110
5c.442–1	1545–0152
5f.103–1	1545–0720
5f.103–3	1545–0720
5f.6045–1	1545–0715
6a.103A–2	1545–0123
	1545–0720
6a.103A–3	1545–0720
7.465–1	1545–0712
7.465–2	1545–0712
7.465–3	1545–0712
7.465–4	1545–0712
7.465–5	1545–0712
7.936–1	1545–0217
7.999–1	1545–0216
7.6039A–1	1545–0015
7.6041–1	1545–0115
11.410–1	1545–0710
11.412(c)–7	1545–0710
11.412(c)–11	1545–0710
12.7	1545–0190
12.8	1545–0191
12.9	1545–0195
14a.422A–1	1545–0123
15A.453–1	1545–0228
16.3–1	1545–0159
16A.126–2	1545–0074
16A.1255–1	1545–0184
16A.1255–2	1545–0184
18.1371–1	1545–0130
18.1378–1	1545–0130
18.1379–1	1545–0130
18.1379–2	1545–0130
20.2010–2T	1545–0015
20.2011–1	1545–0015
20.2014–5	1545–0015
	1545–0260
20.2014–6	1545–0015
20.2016–1	1545–0015
20.2031–2	1545–0015
20.2031–3	1545–0015
20.2031–4	1545–0015
20.2031–6	1545–0015
20.2031–7	1545–0020
20.2031–10	1545–0015
20.2032–1	1545–0015
20.2032A–3	1545–0015
20.2032A–4	1545–0015
20.2032A–8	1545–0015
20.2039–4	1545–0015
20.2051–1	1545–0015
20.2053–3	1545–0015
20.2053–9	1545–0015
20.2053–10	1545–0015
20.2055–1	1545–0015
20.2055–2	1545–0015
	1545–0092
20.2055–3	1545–0015
20.2056(b)–4	1545–0015
20.2056(b)–7	1545–0015
	1545–1612
20.2056A–2	1545–1443
20.2056A–3	1545–1360
20.2056A–4	1545–1360
20.2056A–10	1545–1360
20.2106–1	1545–0015
20.2106–2	1545–0015
20.2204–1	1545–0015
20.2204–2	1545–0015
20.6001–1	1545–0015
20.6011–1	1545–0015
20.6018–1	1545–0015
	1545–0531
20.6018–2	1545–0015
20.6018–3	1545–0015
20.6018–4	1545–0015
	1545–0022
20.6036–2	1545–0015
20.6060–1(a)(1)	1545–1231
20.6061–1	1545–0015
20.6065–1	1545–0015
20.6075–1	1545–0015
20.6081–1	1545–0015
	1545–0181

CFR part or section where identified and described	Current OMB control No.
	1545–1707
20.6091–1	1545–0015
20.6107–1	1545–1231
20.6161–1	1545–0015
	1545–0181
20.6161–2	1545–0015
	1545–0181
20.6163–1	1545–0015
20.6166–1	1545–0181
20.6166A–1	1545–0015
20.6166A–3	1545–0015
20.6324A–1	1545–0754
20.7520–1	1545–1343
20.7520–2	1545–1343
20.7520–3	1545–1343
20.7520–4	1545–1343
22.0	1545–0015
25.2511–2	1545–0020
25.2512–2	1545–0020
25.2512–3	1545–0020
25.2512–5	1545–0020
25.2512–9	1545–0020
25.2513–1	1545–0020
25.2513–2	1545–0020
	1545–0021
25.2513–3	1545–0020
25.2518–2	1545–0959
25.2522(a)–1	1545–0196
25.2522(c)–3	1545–0020
	1545–0196
25.2523(a)–1	1545–0020
	1545–0196
25.2523(f)–1	1545–0015
25.2701–2	1545–1241
25.2701–4	1545–1241
25.2701–5	1545–1273
25.2702–5	1545–1485
25.2702–6	1545–1273
25.6001–1	1545–0020
	1545–0022
25.6011–1	1545–0020
25.6019–1	1545–0020
25.6019–2	1545–0020
25.6019–3	1545–0020
25.6019–4	1545–0020
25.6060–1(a)(1)	1545–1231
25.6061–1	1545–0020
25.6065–1	1545–0020
25.6075–1	1545–0020
25.6081–1	1545–0020
25.6091–1	1545–0020
25.6091–2	1545–0020
25.6107–1	1545–1231
25.6151–1	1545–0020
25.6161–1	1545–0020
25.7520–1	1545–1343
25.7520–2	1545–1343
25.7520–3	1545–1343
25.7520–4	1545–1343
26.2601–1	1545–0985
26.2632–1	1545–0985
	1545–1892
26.2642–1	1545–0985
26.2642–2	1545–0985
26.2642–3	1545–0985
26.2642–4	1545–0985
26.2642–6	1545–1902
26.2652–2	1545–0985
26.2654–1	1545–1902
26.2662–1	1545–0015
	1545–0985
26.2662–2	1545–0985

CFR part or section where identified and described	Current OMB control No.
26.6060–1(a)(1)	1545–1231
26.6107–1	1545–1231
31.3102–3	1545–0029
	1545–0059
	1545–0065
31.3121(b)(19)–1	1545–0029
31.3121(d)–1	1545–0004
31.3121(i)–1	1545–0034
31.3121(k)–4	1545–0137
31.3121(r)–1	1545–0029
31.3121(s)–1	1545–0029
31.3121(v)(2)–1	1545–1643
31.3302(a)–2	1545–0028
31.3302(a)–3	1545–0028
31.3302(b)–2	1545–0028
31.3302(e)–1	1545–0028
31.3306(c)(18)–1	1545–0029
31.3401(a)–1	1545–0029
31.3401(a)(6)	1545–1484
31.3401(a)(6)–1	1545–0029
	1545–0096
	1545–0795
31.3401(a)(7)–1	1545–0029
31.3401(a)(8)(A)–1	1545–0029
	1545–0666
31.3401(a)(8)(C)–1	1545–0029
31.3401(a)(15)–1	1545–0182
31.3401(c)–1	1545–0004
31.3402(b)–1	1545–0010
31.3402(c)–1	1545–0010
31.3402(f)(1)–1	1545–0010
31.3402(f)(2)–1	1545–0010
	1545–0410
31.3402(f)(3)–1	1545–0010
31.3402(f)(4)–1	1545–0010
31.3402(f)(4)–2	1545–0010
31.3402(f)(5)–1	1545–0010
	1545–1435
31.3402(h)(1)–1	1545–0029
31.3402(h)(3)–1	1545–0010
	1545–0029
31.3402(h)(4)–1	1545–0010
31.3402(i)–(1)	1545–0010
31.3402(i)–(2)	1545–0010
31.3402(k)–1	1545–0065
31.3402(l)–(1)	1545–0010
31.3402(m)–(1)	1545–0010
31.3402(n)–(1)	1545–0010
31.3402(o)–2	1545–0415
31.3402(o)–3	1545–0008
	1545–0010
	1545–0415
	1545–0717
31.3402(p)–1	1545–0415
	1545–0717
31.3402(q)–1	1545–0238
	1545–0239
31.3404–1	1545–0029
31.3405(c)–1	1545–1341
31.3406(a)–1	1545–0112
31.3406(a)–2	1545–0112
31.3406(a)–3	1545–0112
31.3406(a)–4	1545–0112
31.3406(b)(2)–1	1545–0112
31.3406(b)(2)–2	1545–0112
31.3406(b)(2)–3	1545–0112
31.3406(b)(2)–4	1545–0112
31.3406(b)(2)–5	1545–0112
31.3406(b)(3)–1	1545–0112
31.3406(b)(3)–2	1545–0112
31.3406(b)(3)–3	1545–0112
31.3406(b)(3)–4	1545–0112

CFR part or section where identified and described	Current OMB control No.
31.3406(b)(4)–1	1545–0112
31.3406(c)–1	1545–0112
31.3406(d)–1	1545–0112
31.3406(d)–2	1545–0112
31.3406(d)–3	1545–0112
31.3406(d)–4	1545–0112
31.3406(d)–5	1545–0112
31.3406(e)–1	1545–0112
31.3406(f)–1	1545–0112
31.3406(g)–1	1545–0096
	1545–0112
	1545–1819
31.3406(g)–2	1545–0112
31.3406(g)–3	1545–0112
31.3406(h)–1	1545–0112
31.3406(h)–2	1545–0112
31.3406(h)–3	1545–0112
31.3406(i)–1	1545–0112
31.3501(a)–1T	1545–0771
31.3503–1	1545–0024
31.3504–1	1545–0029
31.6001–1	1545–0798
31.6001–2	1545–0034
	1545–0798
31.6001–3	1545–0798
31.6001–4	1545–0028
31.6001–5	1545–0798
31.6001–6	1545–0029
	1459–0798
31.6011(a)–1	1545–0029
	1545–0034
	1545–0035
	1545–0059
	1545–0074
	1545–0256
	1545–0718
	1545–2097
31.6011(a)–2	1545–0001
	1545–0002
31.6011(a)–3	1545–0028
31.6011(a)–3A	1545–0955
31.6011(a)–4	1545–0034
	1545–0035
	1545–0718
	1545–1413
	1545–2097
31.6011(a)–5	1545–0028
	1545–0718
	1545–2097
31.6011(a)–6	1545–0028
31.6011(a)–7	1545–0074
31.6011(a)–8	1545–0028
31.6011(a)–9	1545–0028
31.6011(a)–10	1545–0112
31.6011(b)–1	1545–0003
31.6011(b)–2	1545–0029
31.6051–1	1545–0008
	1545–0182
	1545–0458
	1545–1729
31.6051–2	1545–0008
31.6051–3	1545–0008
31.6053–1	1545–0029
	1545–0062
	1545–0064
	1545–0065
	1545–1603
31.6053–2	1545–0008
31.6053–3	1545–0065
	1545–0714
31.6053–4	1545–0065
	1545–1603

CFR part or section where identified and described	Current OMB control No.
31.6060–1(a)(1)	1545–1231
31.6065(a)–1	1545–0029
31.6071(a)–1	1545–0001
	1545–0028
	1545–0029
31.6071(a)–1A	1545–0955
31.6081(a)–1	1545–0008
	1545–0028
31.6091–1	1545–0028
	1545–0029
31.6107–1	1545–1231
31.6157–1	1545–0955
31.6205–1	1545–0029
	1545–2097
31.6301(c)–1AT	1545–0035
	1545–0112
	1545–0257
31.6302–1	1545–1413
31.6302–2	1545–1413
31.6302–3	1545–1413
31.6302–4	1545–1413
31.6302(c)–2	1545–0001
	1545–0257
31.6302(c)–2A	1545–0955
31.6302(c)–3	1545–0257
31.6402(a)–2	1545–0256
	1545–2097
31.6413(a)–1	1545–0029
	1545–2097
31.6413(a)–2	1545–0029
	1545–0256
	1545–2097
31.6413(c)–1	1545–0029
	1545–0171
31.6414–1	1545–0029
	1545–2097
32.1	1545–0029
	1545–0415
32.2	1545–0029
35a.3406–2	1545–0112
35a.9999–5	1545–0029
36.3121(l)(1)–1	1545–0137
36.3121(l)(1)–2	1545–0137
36.3121(l)(3)–1	1545–0123
36.3121(1)(7)–1	1545–0123
36.3121(1)(10)–1	1545–0029
36.3121(1)(10)–3	1545–0029
36.3121(1)(10)–4	1545–0257
40.6060–1(a)(1)	1545–1231
40.6107–1	1545–1231
40.6302(c)–3(b)(2)(ii)	1545–1296
40.6302(c)–3(b)(2)(iii)	1545–1296
40.6302(c)–3(e)	1545–1296
40.6302(c)–3(f)(2)(ii)	1545–1296
41.4481–1	1545–0143
41.4481–2	1545–0143
41.4483–3	1545–0143
41.6001–1	1545–0143
41.6001–2	1545–0143
41.6001–3	1545–0143
41.6060–1(a)(1)	1545–1231
41.6071(a)–1	1545–0143
41.6081(a)–1	1545–0143
41.6091–1	1545–0143
41.6107–1	1545–1231
41.6109–1	1545–0143
41.6151(a)–1	1545–0143
41.6156–1	1545–0143
41.6161(a)(1)–1	1545–0143
44.4401–1	1545–0235
44.4403–1	1545–0235
44.4412–1	1545–0236

CFR part or section where identified and described	Current OMB control No.
44.4901–1	1545–0236
44.4905–1	1545–0236
44.4905–2	1545–0236
44.6001–1	1545–0235
44.6011(a)–1	1545–0235
	1545–0236
44.6060–1(a)(1)	1545–1231
44.6071–1	1545–0235
44.6091–1	1545–0235
44.6107–1	1545–1231
44.6151–1	1545–0235
44.6419–1	1545–0235
44.6419–2	1545–0235
46.4371–4	1545–0023
46.4374–1	1545–0023
46.4375–1	1545–2238
46.4376–1	1545–2238
46.4701–1	1545–0023
	1545–0257
48.4041–4	1545–0023
48.4041–5	1545–0023
48.4041–6	1545–0023
48.4041–7	1545–0023
48.4041–9	1545–0023
48.4041–10	1545–0023
48.4041–11	1545–0023
48.4041–12	1545–0023
48.4041–13	1545–0023
48.4041–18	1545–0023
48.4041–19	1545–0023
48.4041–20	1545–0023
48.4041–21	1545–1270
48.4042–2	1545–0023
48.4052–1	1545–1418
48.4061(a)–1	1545–0023
48.4061(a)–2	1545–0023
48.4061(b)–3	1545–0023
48.4064–1	1545–0014
	1545–0242
48.4071–1	1545–0023
48.4073–1	1545–0023
48.4073–3	1545–0023
	1545–1074
	1545–1087
48.4081–2	1545–1270
	1545–1418
48.4081–3	1545–1270
	1545–1418
	1545–1897
48.4081–4(b)(2)(ii)	1545–1270
48.4081–4(b)(3)(i)	1545–1270
48.4081–4(c)	1545–1270
48.4081–6(c)(1)(ii)	1545–1270
48.4081–7	1545–1270
	1545–1418
48.4082–1T	1545–1418
48.4082–2	1545–1418
48.4082–6	1545–1418
48.4082–7	1545–1418
48.4091–3	1545–1418
48.4101–1	1545–1418
48.4101–1T	1545–1418
48.4101–2	1545–1418
48.4161(a)–1	1545–0723
48.4161(a)–2	1545–0723
48.4161(a)–3	1545–0723
48.4161(b)–1	1545–0723
48.4216(a)–2	1545–0023
48.4216(a)–3	1545–0023
48.4216(c)–1	1545–0023
48.4221–1	1545–0023
48.4221–2	1545–0023
48.4221–3	1545–0023
48.4221–4	1545–0023
48.4221–5	1545–0023
48.4221–6	1545–0023
48.4221–7	1545–0023
48.4222(a)–1	1545–0014
	1545–0023
48.4223–1	1545–0023
	1545–0257
	1545–0723
48.6302(c)–1	1545–0023
	1545–0257
48.6412–1	1545–0723
48.6416(a)–1	1545–0023
	1545–0723
48.6416(a)–2	1545–0723
48.6416(a)–3	1545–0723
48.6416(b)(1)–1	1545–0723
48.6416(b)(1)–2	1545–0723
48.6416(b)(1)–3	1545–0723
48.6416(b)(1)–4	1545–0723
48.6416(b)(2)–1	1545–0723
48.6416(b)(2)–2	1545–0723
48.6416(b)(2)–3	1545–0723
	1545–1087
48.6416(b)(2)–4	1545–0723
48.6416(b)(3)–1	1545–0723
48.6416(b)(3)–2	1545–0723
48.6416(b)(3)–3	1545–0723
48.6416(b)(4)–1	1545–0723
48.6416(b)(5)–1	1545–0723
48.6416(c)–1	1545–0723
48.6416(e)–1	1545–0023
	1545–0723
48.6416(f)–1	1545–0023
	1545–0723
48.6416(g)–1	1545–0723
48.6416(h)–1	1545–0723
48.6420(c)–2	1545–0023
48.6420(f)–1	1545–0023
48.6420–1	1545–0162
	1545–0723
48.6420–2	1545–0162
	1545–0723
48.6420–3	1545–0162
	1545–0723
48.6420–4	1545–0162
	1545–0723
48.6420–5	1545–0162
	1545–0723
48.6420–6	1545–0162
	1545–0723
48.6421–0	1545–0162
	1545–0723
48.6421–1	1545–0162
	1545–0723
48.6421–2	1545–0162
	1545–0723
48.6421–3	1545–0162
	1545–0723
48.6421–4	1545–0162
	1545–0723
48.6421–5	1545–0162
	1545–0723
48.6421–6	1545–0162
	1545–0723
48.6421–7	1545–0162
	1545–0723
48.6424–0	1545–0723
48.6424–1	1545–0723
48.6424–2	1545–0723
48.6424–3	1545–0723

CFR part or section where identified and described	Current OMB control No.
48.6424–4	1545–0723
48.6424–5	1545–0723
48.6424–6	1545–0723
48.6427–0	1545–0723
48.6427–1	1545–0023
	1545–0162
	1545–0723
48.6427–2	1545–0162
	1545–0723
48.6427–3	1545–0723
48.6427–4	1545–0723
48.6427–5	1545–0723
48.6427–8	1545–1418
48.6427–9	1545–1418
48.6427–10	1545–1418
48.6427–11	1545–1418
49.4251–1	1545–1075
49.4251–2	1545–1075
49.4251–4(d)(2)	1545–1628
49.4253–3	1545–0023
49.4253–4	1545–0023
49.4264(b)–1	1545–0023
	1545–0224
	1545–0225
	1545–0226
	1545–0230
	1545–0257
	1545–0912
49.4271–1(d)	1545–0685
49.5000B–1	1545–2177
51.2(f)(2)(ii)	1545–2209
51.7	1545–2209
52.4682–1(b)(2)(iii)	1545–1153
52.4682–2(b)	1545–1153
	1545–1361
52.4682–2(d)	1545–1153
	1545–1361
52.4682–3(c)(2)	1545–1153
52.4682–3(g)	1545–1153
52.4682–4(f)	1545–0257
	1545–1153
52.4682–5(d)	1545–1361
52.4682–5(f)	1545–1361
53.4940–1	1545–0052
	1545–0196
53.4942(a)–1	1545–0052
53.4942(a)–2	1545–0052
53.4942(a)–3	1545–0052
53.4942(b)–3	1545–0052
53.4945–1	1545–0052
53.4945–4	1545–0052
53.4945–5	1545–0052
53.4945–6	1545–0052
53.4947–1	1545–0196
53.4947–2	1545–0196
53.4948–1	1545–0052
53.4958–6	1545–1623
53.4961–2	1545–0024
53.4963–1	1545–0024
53.6001–1	1545–0052
53.6011–1	1545–0049
	1545–0052
	1545–0092
	1545–0196
53.6060–1(a)(1)	1545–1231
53.6065–1	1545–0052
53.6071–1	1545–0049
53.6081–1	1545–0066
	1545–0148
53.6107–1	1545–1231
53.6161–1	1545–0575
54.4972–1	1545–0197

CFR part or section where identified and described	Current OMB control No.
54.4975–7	1545–0575
54.4977–1T	1545–0771
54.4980B–6	1545–1581
54.4980B–7	1545–1581
54.4980B–8	1545–1581
54.4980F–1	1545–1780
54.4981A–1T	1545–0203
54.6011–1	1545–0575
54.6011–1T	1545–0575
54.6060–1(a)(1)	1545–1231
54.6107–1	1545–1231
54.9801–3	1545–1537
54.9801–4	1545–1537
54.9801–5	1545–1537
54.9801–6	1545–1537
54.9812–1T	1545–2165
54.9815–1251T	1545–2178
54.9815–2711T	1545–2179
54.9815–2712T	1545–2180
54.9815–2714T	1545–2172
54.9815–2715	1545–2229
54.9815–2719AT	1545–2181
54.9815–2719T	1545–2182
55.6001–1	1545–0123
55.6011–1	1545–0123
	1545–0999
	1545–1016
55.6060–1(a)(1)	1545–1231
55.6061–1	1545–0999
55.6071–1	1545–0999
55.6107–1	1545–1231
56.4911–6	1545–0052
56.4911–7	1545–0052
56.4911–9	1545–0052
56.4911–10	1545–0052
56.6001–1	1545–1049
56.6011–1	1545–1049
56.6060–1(a)(1)	1545–1231
56.6081–1	1545–1049
56.6107–1	1545–1231
56.6161–1	1545–0257
	1545–1049
57.2(e)(2)(i)	1545–2249
145.4051–1	1545–0745
145.4052–1	1545–0120
	1545–0745
	1545–1076
145.4061–1	1545–0224
	1545–0230
	1545–0257
	1545–0745
156.6001–1	1545–1049
156.6011–1	1545–1049
156.6060–1(a)(1)	1545–1231
156.6081–1	1545–1049
156.6107–1	1545–1231
156.6161–1	1545–1049
157.6001–1	1545–1824
157.6011–1	1545–1824
157.6060–1(a)(1)	1545–1231
157.6081–1	1545–1824
157.6107–1	1545–1231
157.6161–1	1545–1824
301.6011–2	1545–0225
	1545–0350
	1545–0387
	1545–0441
	1545–0957
301.6011(g)–1	1545–2079
301.6017–1	1545–0090
301.6034–1	1545–0092
301.6035–1	1545–0123

CFR part or section where identified and described	Current OMB control No.
301.6036–1	1545–0013
	1545–0773
301.6047–1	1545–0367
	1545–0957
301.6056–1	1545–2251
301.6056–2	1545–2251
301.6057–1	1545–0710
301.6057–2	1545–0710
301.6058–1	1545–0710
301.6059–1	1545–0710
301.6103(c)–1	1545–1816
301.6103(n)–1	1545–1841
301.6103(p)(2)(B)–1	1545–1757
301.6104(a)–1	1545–0495
301.6104(a)–5	1545–0056
301.6104(a)–6	1545–0056
301.6104(b)–1	1545–0094
	1545–0742
301.6104(d)–1	1545–1655
301.6104(d)–2	1545–1655
301.6104(d)–3	1545–1655
301.6109–1	1545–0003
	1545–0295
	1545–0367
	1545–0387
	1545–0957
	1545–1461
	1545–2242
301.6109–3	1545–1564
301.6110–3	1545–0074
301.6110–5	1545–0074
301.6111–1T	1545–0865
	1545–0881
301.6111–2	1545–0865
	1545–1687
301.6112–1	1545–0865
	1545–1686
301.6112–1T	1545–0865
	1545–1686
301.6114–1	1545–1126
	1545–1484
301.6222(a)–2	1545–0790
301.6222(b)–1	1545–0790
301.6222(b)–2	1545–0790
301.6222(b)–3	1545–0790
301.6223(b)–1	1545–0790
301.6223(c)–1	1545–0790
301.6223(e)–2	1545–0790
301.6223(g)–1	1545–0790
301.6223(h)–1	1545–0790
301.6224(b)–1	1545–0790
301.6224(c)–1	1545–0790
301.6224(c)–3	1545–0790
301.6227(c)–1	1545–0790
301.6227(d)–1	1545–0790
301.6229(b)–2	1545–0790
301.6230(b)–1	1545–0790
301.6230(e)–1	1545–0790
301.6231(a)(1)–1	1545–0790
301.6231(a)(7)–1	1545–0790
301.6231(c)–1	1545–0790
301.6231(c)–2	1545–0790
301.6241–1T	1545–0130
301.6316–4	1545–0074
301.6316–5	1545–0074
301.6316–6	1545–0074
301.6316–7	1545–0029
301.6324A–1	1545–0015
301.6361–1	1545–0024
	1545–0074
301.6361–2	1545–0024
301.6361–3	1545–0074
301.6402–2	1545–0024
	1545–0073
	1545–0091
301.6402–3	1545–0055
	1545–0073
	1545–0091
	1545–0132
	1545–1484
301.6402–5	1545–0928
301.6404–1	1545–0024
301.6404–2T	1545–0024
301.6404–3	1545–0024
301.6405–1	1545–0024
301.6501(c)–1	1545–1241
	1545–1637
301.6501(d)–1	1545–0074
	1545–0430
301.6501(o)–2	1545–0728
301.6511(d)–1	1545–0024
	1545–0582
301.6511(d)–2	1545–0024
	1545–0582
301.6511(d)–3	1545–0024
	1545–0582
301.6652–2	1545–0092
301.6685–1	1545–0092
301.6689–1T	1545–1056
301.6707–1T	1545–0865
	1545–0881
301.6708–1T	1545–0865
301.6712–1	1545–1126
301.6723–1A(d)	1545–0909
301.6903–1	1545–0013
	1545–1783
301.6905–1	1545–0074
301.7001–1	1545–0123
301.7101–1	1545–1029
301.7207–1	1545–0092
301.7216–2	1545–0074
301.7216–2(o)	1545–1209
301.7425–3	1545–0854
301.7430–2(c)	1545–1356
301.7502–1	1545–1899
301.7507–8	1545–0123
301.7507–9	1545–0123
301.7513–1	1545–0429
301.7517–1	1545–0015
301.7605–1	1545–0795
301.7623–1	1545–0409
	1545–1534
301.7654–1	1545–0803
301.7701–3	1545–1486
301.7701–4	1545–1465
301.7701–7	1545–1600
301.7701–16	1545–0795
301.7701(b)–1	1545–0089
301.7701(b)–2	1545–0089
301.7701(b)–3	1545–0089
301.7701(b)–4	1545–0089
301.7701(b)–5	1545–0089
301.7701(b)–6	1545–0089
301.7701(b)–7	1545–0089
	1545–1126
301.7701(b)–9	1545–0089
301.7805–1	1545–0805
301.9000–5	1545–1850
301.9001–1	1545–0220
301.9100–2	1545–1488
301.9100–3	1545–1488
301.9100–4T	1545–0016
	1545–0042
	1545–0074

CFR part or section where identified and described	Current OMB control No.
	1545–0129
	1545–0172
	1545–0619
301.9100–6T	1545–0872
301.9100–7T	1545–0982
301.9100–8	1545–1112
301.9100–11T	1545–0123
301.9100–12T	1545–0026
	1545–0074
	1545–0172
	1545–1027
301.9100–14T	1545–0046
301.9100–15T	1545–0046
301.9100–16T	1545–0152
302.1–7	1545–0024
305.7701–1	1545–0823
305.7871–1	1545–0823
404.6048–1	1545–0160
420.0–1	1545–0710
Part 509	1545–0846
Part 513	1545–0834
Part 514	1545–0845
Part 521	1545–0848
601.104	1545–0233
601.105	1545–0091
601.201	1545–0019
	1545–0819
601.204	1545–0152
601.401	1545–0257
601.504	1545–0150
601.601	1545–0800
601.602	1545–0295
	1545–0387
	1545–0957
601.702	1545–0429

(26 U.S.C. 7805)

[T.D. 8011, 50 FR 10222, Mar. 14, 1985]

EDITORIAL NOTE: For FEDERAL REGISTER citations affecting § 602.101, see the List of CFR Sections Affected, which appears in the Finding Aids section of the printed volume and at *www.fdsys.gov*.

List of CFR Sections Affected

All changes in this volume of the Code of Federal Regulations (CFR) that were made by documents published in the FEDERAL REGISTER since January 1, 2010 are enumerated in the following list. Entries indicate the nature of the changes effected. Page numbers refer to FEDERAL REGISTER pages. The user should consult the entries for chapters, parts and subparts as well as sections for revisions.

For changes to this volume of the CFR prior to this listing, consult the annual edition of the monthly List of CFR Sections Affected (LSA). The LSA is available at *www.fdsys.gov*. For changes to this volume of the CFR prior to 2001, see the ''List of CFR Sections Affected, 1949–1963, 1964–1972, 1973–1985, and 1986–2000'' published in 11 separate volumes. The ''List of CFR Sections Affected 1986–2000'' is available at *www.fdsys.gov*.

2010

26 CFR

75 FR Page

Chapter I

1.1461–1 (a)(1) amended 75899
1.1502–13 First (g)(3)(i)(B)(*1*)(*vi*) moved into correct numerical order; second (g)(3)(i)(B)(*1*)(*vi*) correctly removed; (g)(3)(i)(B)(*1*)(*iv*) correctly reinstated; CFR correction 15610
1.1502–13T (f)(5)(ii)(G) correctly added 1704
1.1502–21 (b)(3)(v) and (h)(9) added 35645
1.1502–21T Revised 35645
(b)(3)(v)(B), (C)(*1*) and (*2*) revised; (b)(3)(v)(E) *Examples 1* and *2* correctly amended 44901
1.1502–35 (j) correctly amended 10172

2011

26 CFR

76 FR Page

Chapter I

1.1502–13 (a)(6)(ii) table amended; (c)(6)(ii)(C) and (D) revised; (c)(7)(ii) *Examples 16* and *17* and (iii) added; (f)(7)(i) *Examples 8* and *9* and (ii) removed; (f)(7)(i) redesignated as (f)(7) 11957
(c)(6)(ii)(C)(*2*) and (D)(*1*) correctly revised 17782
(l)(6) correctly added 49300
1.1502–13T Revised 11959

26 CFR—Continued

76 FR Page

Chapter I—Continued

(f)(5)(ii)(F)(*2*) correctly revised 17782

2012

26 CFR

77 FR Page

Chapter I

1.1441-2 (b)(6) and (e)(7) added 3109
1.1441-2T Added 3109
1,1441-3 (h) redesignated as (j); new (h) and (i) added 3110
1.1441-3T Added 3110
1.1441-4 (a)(3)(i) revised; (a)(3)(iii) added 3110
(a)(3)(i) and (iii) correctly revised (temporary) 13969
1.1441-4T Added 3110
(a)(3)(i) correctly amended (temporary) 13969
1.1441-7 (a)(2) redesignated as (a)(3) and revised; new (a)(2) added 3110
(a)(3) introductory text and *Example 6* correctly revised (temporary) 13969
1.1441-7T Added 3111
1.1461-1 (c)(2)(i)(L) and (M) redesignated as (c)(2)(i)(M) and (N); new (c)(2)(i)(L) added 3111
1.1461-1T Added 3111
1.1502-9 Revised 37585
1.1502-9T Removed 37587

26 CFR—Continued

77 FR Page

Chapter I—Continued

1.1502-13 (f)(5)(ii)(B)(*1*) and (*2*) revised; (f)(5)(ii)(F) added 36915
1.1502-13T Removed 36916

2013

26 CFR

78 FR Page

Chapter I

1.1401-1 (b) revised; (d) and (e) added 71471
1.1411-0 Section and undesignated center heading added 72422
1.1411-1 Added 72424
1.1411-2 Added 72424
1.1411-3 Added 72424
1.1411-4 Added 72424
1.1411-5 Added 72424
1.1411-6 Added 72424
1.1411-7 Added 72424
1.1411-8 Added 72424
1.1411-9 Added 72424
1.1411-10 Added 72424
1.1441-2 (b)(6) revised; (f) amended 73081
1.1441-2T Removed 73081
1.1441-3 (i) removed; (j) redesignated as new (i); (h) revised; new (i) amended 73081
1.1441-3T Removed 73081
1.1441-4 (a)(3)(i), (iii) and (g) heading revised; (g)(1) amended 73081
1.1441-4T Removed 73082
1.1441-6 (h) redesignated as (i); (c)(2) and new (i)(1) revised; new (h) added 73082
1.1441-7 (a)(3) removed; (a)(2) redesignated as new (a)(3); new (a)(3) and (g) revised; new (a)(2) and (4) added 73082
1.1441-7T Removed 73083
1.1461-1 (c)(2)(i)(L) revised; (c)(2)(iii) added 73083
1.1461-1T Removed 73083
1.1471-0 Undesignated center heading and section added 5899
Correctly amended 55203
1.1471-1 Added 5906
Undesignated center heading, subheading, section and note removed 5899
(b)(23) and (99) correctly revised; (b)(34) correctly amended 55203
1.1471-2 Added 5911

26 CFR—Continued

78 FR Page

Chapter I—Continued

Heading, (a)(2)(iii)(A)(*2*), (iv) and (4)(viii) correctly revised; (a)(2)(i), (iii)(A), (v) and (4)(i)(A) correctly amended 55203
1.1471-3 Added 5916
(b)(2), (c)(2)(i), (3)(iii)(B)(*2*), (6), (v)(B), (9)(iv)(A), (d)(1), (2)(i), (iii), (4)(i), (6)(ii), (iii) and (9)(i)(A) correctly amended; (c)(3)(iii)(A)(*5*), (6)(ii)(B)(*2*), (*3*), (C)(*2*)(*vi*), (d)(2)(ii) and (6)(i)(F) correctly revised 55204
1.1471-4 Added 5942
(b)(1), (2), (3), (c)(2)(iii)(B), (C), (v), (5)(iv)(D)(*4*), (6) *Example 2*, (7), (d)(4)(i), (6)(i), (e)(2)(ii), (iii), (3)(ii)(B) and (i)(1) correctly amended; (b)(7), (c)(2)(v) heading, (d)(2)(iii)(B) introductory text, (*4*), (3)(iv)(B), (D), (5)(iii)(B), (7)(ii)(A)(*1*), (e)(2)(iv)(B) and (3)(iii)(B) correctly revised 55205
1.1471-5 Added 5961
(b)(1)(iii)(A), (B), (C), (3)(iv), (4)(iv), (e)(4)(v) *Example 1*, (5), (i)(B)(*1*), (f)(2), (3)(ii)(E), (g)(3)(i)(B), (ii) and (iii) correctly amended; (b)(2)(i)(C), (v), (e)(5)(iv)(D), (f)(1)(i)(F)(*3*)(*i*), (*iii*) and (2)(iii)(B) correctly revised 55207
1.1471-6 Added 5976
(h)(2)(ii) correctly revised 55208
1.1472-1 Added 5978
(a) correctly amended; (b)(1) introductory text, (2) and (c)(2)(i) correctly revised 55208
1.1473-1 Added 5981
(a)(3) (iii)(A), (4)(iii), (vi), (b)(3)(ii)(A) and (B) correctly amended; (a)(5)(vii) heading correctly revised 55208
1.1474-1 Added 5985
(a)(2), (d)(4)(i)(C)(*1*), (iii)(C), (i)(1)(ii), (iii) and (2)(iii) correctly revised; (b)(1), (c)(2), (d)(1)(ii)(A)(*1*)(*iii*), (B)(*1*)(*i*), (*iii*), (4)(i)(B), (C)(*2*), (*3*), (ii)(C), (iii)(A), (B) and (i)(1) correctly amended 55208
1.1474-2 Added 5991
1.1474-3 Added 5992
1.1474-4 Added 5992
1.1474-5 Added 5992
1.1474-6 Added 5993

26 CFR—Continued

78 FR
Page

Chapter I—Continued

1.1474-7 Added 5994

1.1502-13 (f)(5)(ii)(C) heading revised; (f)(5)(ii)(C)(*1*) and (m) amended 28490

(f)(5)(ii)(C) heading correctly revised 53027

1.1502-32 (c)(3) correctly amended; CFR correction 18235

1.1502-36 (d)(8) *Example 6* correctly amended; CFR correction 18235

2014

26 CFR

79 FR
Page

Chapter I

1.1411-0 Correctly amended 18160

1.1411-2 (b)(2) correctly amended 18160

1.1411-3 (c)(3)(ii)(A) and (iii)(B) amended 18160

1.1411-4 (d)(4)(i)(C) *Example 2*, (f)(2)(v) *Example 1*, *Example 2*, (3)(vii), (4)(ii) *Example 1*, (g)(7)(i) introductory text and (h)(5) *Example 1* correctly amended; (f)(3)(iii) and (h)(2) introductory text correctly revised 18160

1.1411-5 (b)(2)(i) and (iii) correctly revised 18160

1.1411-10 (c)(5)(i)(B) correctly revised; (h) *Example 2* correctly amended 18160

26 CFR—Continued

79 FR
Page

Chapter I—Continued

1.1441-1 (a), (b)(1), (2)(i), (iii)(A), (iv)(A), (B)(*2*), (*3*), (C), (E), (vi), (vii), (3)(i), (ii), (iii) introductory text, (A), (D), (iv) introductory text, (A), (v)(B), (vi), (vii), (ix)(A), (x), (4) introductory text, (i), (6), (7)(i) introductory text, (A), (B), (C), (ii), (iv), (c) introductory text, (2), (5), (10), (12), (16), (17), (25), (28), (29), (30), (d)(4), (e)(1)(ii)(A)(*2*), (*3*), (2)(ii), (3)(ii) introductory text, (A), (C), (D), (iv)(A), (B), (C), (D)(*1*) through (*6*), (E), (v), (4) introductory text, (i), (ii)(A), (B)(*1*) through (*6*), (*8*), (ii)(C), (D), (iii), (iv)(A), (C), (v), (vi), (vii) introductory text, (A), (F), (H), (viii)(B), (ix) and (5) revised; (b)(2)(iv)(B)(*4*), (5)(ix), (7)(v), (c)(31) through (56), (e)(3)(ii)(E), (4)(ii)(B)(*9*) through (*12*), (vii)(I), (viii)(C) and (f)(3) added 12747

(b)(2)(vii) and (e)(4)(ii)(B) introductory text correctly revised 37182

1.1441-1T Added 12749

(b)(2)(iv)(A), (vii)(C)(*1*), (e)(3)(iv)(D)(*3*), (*6*), (4)(iv)(C) and (ix)(D) correctly amended; (e)(2)(ii), (3)(ii)(A), (D), (iii)(A), (D), (iv)(C)(*2*)(*i*), (*iv*), (D)(*2*)(*ii*), (3)(v)(A), (C), (D), (4)(ii)(B) introductory text, (*2*), (ix)(C)(*1*), (5)(ii)(A), (iv), (v)(C)(*1*) and (*2*)(*i*) correctly revised 37182

1.1441-3 (a), (c)(4)(i) and (d) revised; (j) added 12772

1.1441-3T Added 12773

1.1441-4 (a)(2)(ii), (b)(2)(i), (iii), (V) and (3) revised; (g)(3) and (h) added 12774

1.1441-4T Added 12774

1.1441-5 (b)(2)(iii), (c)(1)(i) introductory text, (C), (iv), (2)(i), (ii), (iii), (iv)(A), (B), (3)(i), (ii), (iii)(A), (iv), (v), (d)(2), (3), (4), (e)(5)(i), (ii), (iii)(A), (iv), (v), (6)(ii) and (f) revised; (b)(2)(vi), (c)(1)(v), (e)(3)(iii) and (g)(3) added 12775

1.1441-5T Added 12775

(c)(2)(iv)(A), (d)(2), (e)(5)(iii)(A) and (6)(ii) correctly revised 37185

26 CFR—Continued

79 FR Page

Chapter I—Continued

1.1441-6 (a), (b)(1), (2)(i), (iv) and (c)(1) revised; (i)(3) added 12780

1.1441-6T Added 12780

(a) and (b)(1) correctly revised; (c)(1) correctly amended 37186

1.1441-7 (b), (c) and (f)(2)(ii) revised; (h) added 12782

1.1441-7T Added 12782

(b)(2), (3)(i) and (11)(ii) correctly revised 37187

1.1461-1 (b)(1), (c)(1)(i), (ii), (2)(ii)(E), (H), (I), (3)(i), (iii), (4)(i), (ii)(A), (iv), (v), (5) and (i) revised 12789

(i) correctly revised 37187

1.1461-1T Added 12789

(c)(1)(ii)(A)(*6*), (B)(*1*) and (d) through (i) correctly revised; (c)(1)(ii)(B)(*3*) and (*4*) correctly amended 37187

1.1461-2 (a)(2)(i), (4) and (d) revised 12792

1.1461-2T Added 12792

1.1471-1 (b)(81) removed; (b)(7), (8), (9) through (17), (18) through (27), (28) through (38), (39) through (61), (62) through (74), (75) through (80), (82) through (106), (107), (108) through (114) and (115) through (142) redesignated as (b)(8), (9), (11) through (19), (21) through (30), (32) through (42), (44) through (66), (68) through (80), (82) through (87), (88) through (112), (114), (116) through (122) and (124) through (151); new (b)(7), (10), (20), (31), (43), (67), (81), (113), (115) and (123) added; new (b)(23), (35), (41), (48), (50), (76), (77), (83), (88), (91), (98), (100), (104)(i), (ii)(A), (B), (C), (105, (124), (125), (128), (135) and (141) revised 12825

1.1471-1T Added 12826

(b)(20) and (98) revised 37176

1.1471-2 (a)(1), (2)(i), (ii) introductory text, (iii)(A), (v), (4)(ii)(A), (B), (b)(2)(i)(A)(*1*), (ii)(A)(*4*), (B)(*2*), (iv) and (4)(ii) revised; (a)(4)(ii) heading removed; (a)(4)(ii) introductory text added 12828

(a)(2)(ii) revised; (a)(2)(iii)(A)(*1*) through (*4*), (a)(4)(ii)(B)(*1*) and (*2*) added 37176

26 CFR—Continued

79 FR Page

Chapter I—Continued

1.1471-2T Added 12828

(a)(2)(i) revised 37177

1.1471-3 (c)(6)(ii)(B)(*7*), (8)(v), (d)(5)(iii), (11)(x), (xi) and (xii) added; (a)(3)(iii), (v), (vi), (3), (c)(3)(ii)(C), (D), (iii)(A) introductory text, (*5*), (B)(*1*) through (*4*), (5)(ii)(B), (6)(ii)(B)(*3*), (*5*), (*6*), (C)(*3*), (*4*), (*5*), (E)(*3*), (6)(iv), (v)(A), (B), (9)(ii)(B), (v), (d)(1), (2)(i), (iii), (4)(i), (ii), (iii) introductory text, (A)(*1*), (iv)(A), (C), (D), (v), (5)(i), (ii), (6)(vii)(A)(*1*), (11)(viii)(A) introductory text, (C), (12)(iii)(A), (B), (e)(2), (3), (4) introductory text, (i) through (iv), (v) introductory text, (B)(*1*), (*2*), (vi)(B), (vii)(B), (viii)(A)(*4*) and (f)(1) through (9) revised 12830

1.1471-3T Added 12831

(a)(3)(vi), (c)(3)(iii)(A)(*5*), (B)(*1*), (6)(iv), (d)(4)(i), (11)(xii)(B), (e)(4)(ii)(A), (iv)(A) and (vii)(B) revised; (e)(4)(vii)(C) and (D) added 37177

1.1471-4 (d)(3)(v) and (7) heading removed; (d)(3)(vi), (vii) and (viii) redesignated as new (d)(3)(v), (vi) and (vii); (d)(2)(iii)(C), (d)(2)(ii)(F), (d)(6)(vii) and (d)(7) introductory text added; (a)(3), (b)(1), (2), (3), (6), (c)(5)(iv)(B)(*2*)(*vi*), (iv)(E), (d)(1), (2)(i), (ii)(A), (B)(*2*), (E), (iii)(A), (B) introductory text, (3)(ii)(E), (iii)(F), (5)(v), (vi), (7)(i), (ii)(A), (iii), (iv)(A), (B), (8), (9) *Examples 3, 5, 7*, (e)(1), (2)(ii), (4)(i), (ii), (g)(1) introductory text, (ii) and (2) revised 12843

(d)(6)(vi) and (vii) revised; (d)(7)(ii)(A)(*1*), (*2*) and (*3*) added 37178

1.1471-4T Added 12844

(b)(3)(iii), (d)(2)(ii)(F), (iii)(B) introductory text and (7)(iv)(B) revised 37179

(d)(7)(iv)(B) correctly amended 68619

26 CFR—Continued

79 FR Page

Chapter I—Continued

1.1471-5 (a)(3)(ii), (b)(3)(v)(B)(*3*) and (vi)(B)(*3*) removed; (a)(3)(iii) through (vi) and (j) redesignated as new (a)(3)(ii) through (v) and (l); (f)(1)(i)(F)(*3*)(*vii*), (2)(v), new (j) and (k) added; (a)(3)(i), (4)(i), (b)(1)(iii)(B)(*2*), (3)(iv), (v)(A), (B)(*1*), (*2*), (vi), (c), (e)(1)(V)(A), (3)(ii), (4)(v) *Examples 7, 8*, (5)(i)(A)(*3*), (B) introductory text, (*1*), (C), (D)(*1*)(*iv*), (*v*), (iv)(B), (f)(1)(i)(A)(*6*), (B)(*1*), (*3*), (C)(*2*), (D)(*4*), (*5*), (*6*), (*7*) introductory text, (E), (F)(*1*)(*ii*), (*3*)(*v*), (*vi*),(*5*), (ii)(B), (2) introductory text, (i)(B), (iii), (iv), (4)(i), (g)(3)(i)(D) AND (i) revised 12849

1.1471-5T Added 12850
(f)(2)(iii) introductory text, (i) heading and (1) revised; (i) introductory text removed 37179

1.1471-6 (d)(1), (4), (f)(2)(iii)(B), (C), (3)(ii), (iii), (5), (6), (g) and (h)(2) revised 12857

1.1471-6T Added 12857
(h)(2) revised 37180

1.1472-1 (f) redesignated as (h); (c)(1)(vi), (vii), (3), (4), (5), new (f) and (g) added; (b)(1) introductory text, (2), (c)(1) introductory text, (i) introductory text, (ii), (iii), (iv) introductory text, (C), (v), (2), (d)(1) and (2) revised 12858

1.1472-1T Added 12858
(c)(1)(ii) and (3)(iii) revised 37180

1.1473-1 (a)(2)(vi), (3)(iii)(B)(*4*), (4)(vi), (5)(i) through (vi) and (b)(2)(v) revised; (a)(4)(vii) added 12860

26 CFR—Continued

79 FR Page

Chapter I—Continued

1.1473-1T Added 12861
(a)(4)(vi) and (vii) revised 37180

1.1474-1 (d)(1)(ii)(A)(*1*)(*ix*), (3)(iii), (4)(ii)(C), (i)(1)(iv) and (v) removed; (d)(1)(ii)(A)(*1*)(*x*), (*xi*), (*xii*) and (3)(iv) through (x) redesignated as (d)(1)(ii)(A)(*1*)(*ix*) through (*xi*) and (3)(iii) through (ix); (d)(1)(i), (ii)(A)(*1*)(*viii*), (*ix*), (B)(*1*)(*i*), (*vi*), (*vii*), (*ix*), (2)(i), (4)(i)(B), (E), (ii)(B), (iii), (i)(1) introductory text, (i), (ii), (iii), (2) introductory text and (iii) revised 12862

1.1474-1T Added 12862
(d)(4)(iii)(C), (i)(1)(i), (ii), (iii)(C), (2) introductory text and (iii) revised 37180

1.1474-6 (b)(1) revised; (f) redesignated as (g); new (f) added 12865

1.1474-6T Added 12865

2015

(Regulations published from January 1, 2015, through April 1, 2015)

26 CFR

80 FR Page

Chapter I

1.1502-77 Redesignated as 1.1502-77B; new 1.1502-77 added 17318

1.1502-77A (e)(2), (3), (4) and (iii) amended; (g) heading revised 17318

1.1502-77B Redesignated from 1.1502-77; heading and (h)(1)(i) revised; undesignated center heading added 17318

1.1502-78 (a), (b)(1) and (c) amended 17324